Automatic Sprinkler Systems Handbook

Fourteenth Edition

Edited by

David R. Hague, P.E.
Principal Fire Protection Engineer, NFPA

Chad R.W. Duffy, P.E.
Senior Fire Protection Engineer, NFPA

With the complete text of the 2019 edition of NFPA® 13, *Standard for the Installation of Sprinkler Systems*

NATIONAL FIRE PROTECTION ASSOCIATION
The leading information and knowledge resource on fire, electrical and related hazards

EDUFIRE.IR

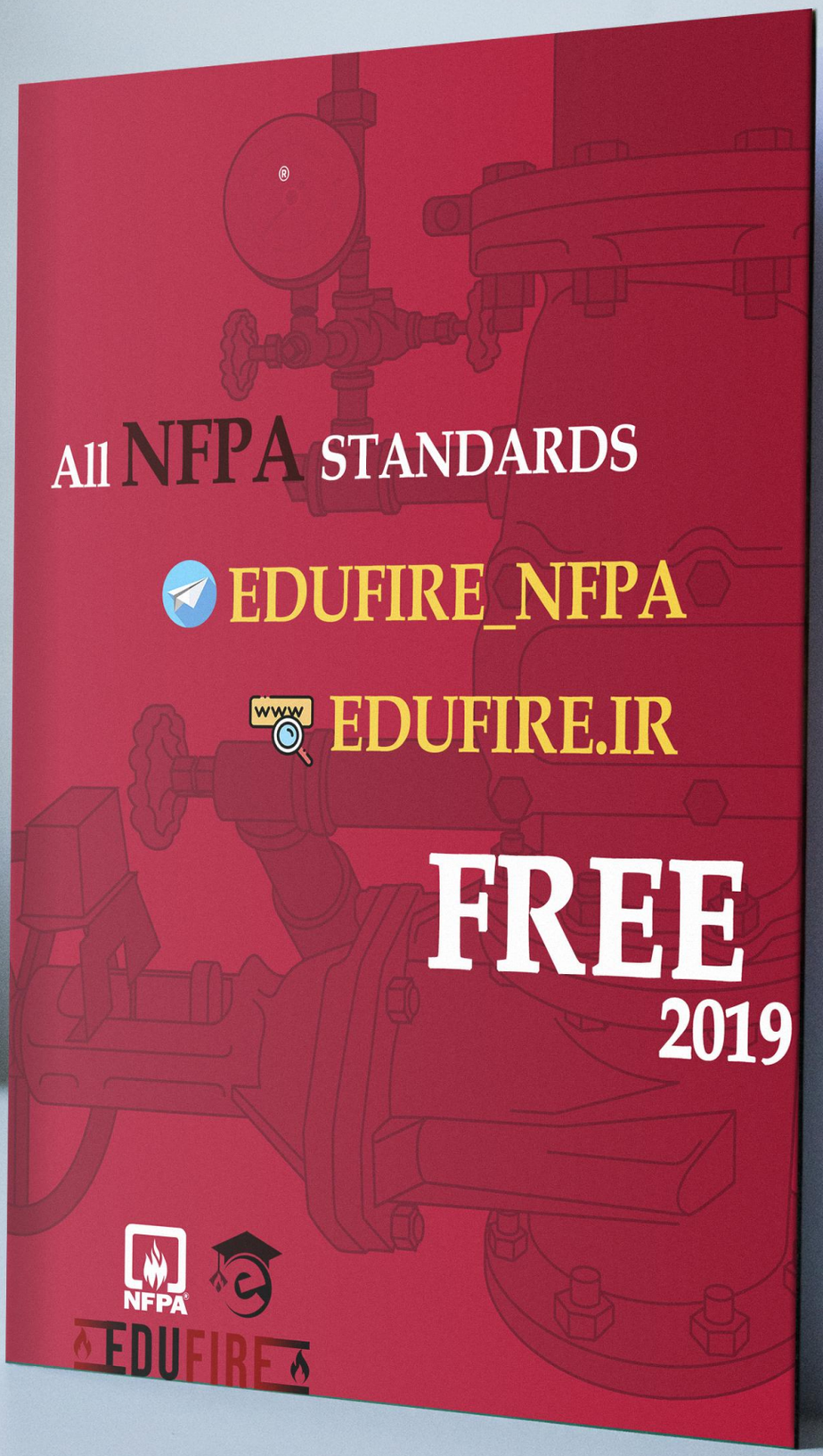
All NFPA STANDARDS
EDUFIRE_NFPA
EDUFIRE.IR
FREE
2019
NFPA
EDUFIRE

EDUFIRE.IR

PDF Navigation Tips

Find

To find a word or term in the PDF:

1. Select Find under the Edit menu or use the keyboard shortcut: CTRL + F for PC; COMMAND + F for Mac.
2. Type a word or term in the Find box. To specify Whole words only or Case-sensitive, use the drop-down arrow to the right of the Find box and toggle these criteria on or off.

The found term will be highlighted in the text. To go to other occurrences of the term, use the previous and next buttons that appear beside the Find box.

Advanced Search

Use the drop-down arrow to the right of the Find box and select Open Full Search. Additional search options are available by selecting Show More Options at the bottom of the pane. Options in the advanced search window include matching the exact word or phrase, matching only some of the words, and stemming (see below).

> **Stemming** finds words that contain part (the stem) of a specified search word. For example, a search for the word *opening* would find instances of *open, opened, opens*, and *openly.* Wildcard characters (* or ?) are not permitted in stemming searches. Stemming isn't available if either Whole words only or Case-sensitive is selected.

Links

Links to other sections of the document are colored red. When you click on a link and are directed to another page, use the following keyboard shortcut to return to the original page: ALT + <left arrow> for PC; COMMAND + <left arrow> for Mac.

EDUFIRE.IR

Features of the *Automatic Sprinkler Systems Handbook*, 2019 Edition

The 2019 edition of the *Automatic Sprinkler Systems Handbook* contains the complete mandatory text of the 2019 edition of NFPA 13, *Standard for the Installation of Sprinkler Systems*, as well as expert commentary to assist users in their understanding and application of the standard. In addition to the commentary text, this edition of the handbook also offers a number of helpful features, which are described below.

Shading indicates where text has changed from the previous edition of the standard.

Commentary text is colored blue to distinguish it from the text of the standard.

Closer Look features provide further information on selected topics from the standard.

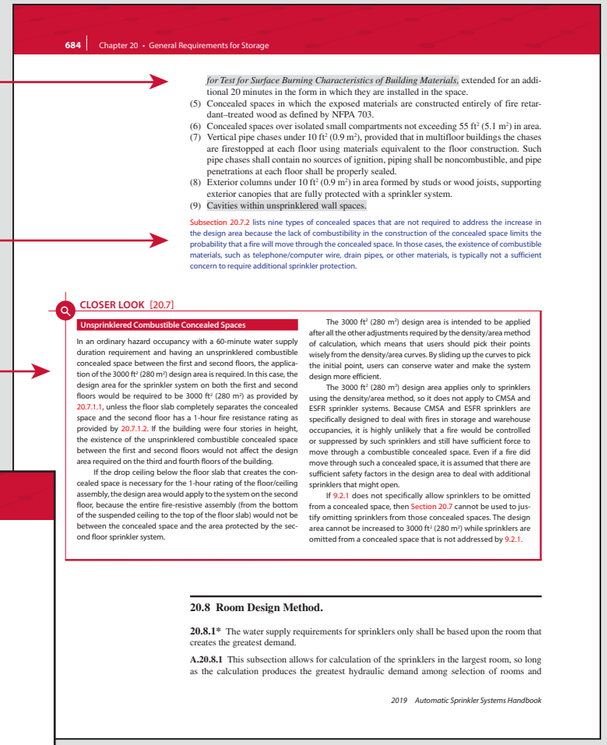

684 | Chapter 20 • General Requirements for Storage

for Test for Surface Burning Characteristics of Building Materials, extended for an additional 20 minutes in the form in which they are installed in the space.

(5) Concealed spaces in which the exposed materials are constructed entirely of fire retardant–treated wood as defined by NFPA 703.
(6) Concealed spaces over isolated small compartments not exceeding 55 ft² (5.1 m²) in area.
(7) Vertical pipe chases under 10 ft² (0.9 m²), provided that in multifloor buildings the chases are firestopped at each floor using materials equivalent to the floor construction. Such pipe chases shall contain no sources of ignition, piping shall be noncombustible, and pipe penetrations at each floor shall be properly sealed.
(8) Exterior columns under 10 ft² (0.9 m²) in area formed by studs or wood joists, supporting exterior canopies that are fully protected with a sprinkler system.
(9) Cavities within unsprinklered wall spaces.

Subsection 20.7.2 lists nine types of concealed spaces that are not required to address the increase in the design area because the lack of combustibility in the construction of the concealed space limits the probability that a fire will move through the concealed space. In those cases, the existence of combustible materials, such as telephone/computer wire, drain pipes, or other materials, is typically not a sufficient concern to require additional sprinkler protection.

CLOSER LOOK [20.7]

Unsprinklered Combustible Concealed Spaces

In an ordinary hazard occupancy with a 60-minute water supply duration requirement and having an unsprinklered combustible concealed space between the first and second floors, the application of the 3000 ft² (280 m²) design area is required. In this case, the design area for the sprinkler system on both the first and second floors would be required to be 3000 ft² (280 m²) as provided by 20.7.1.1, unless the floor slab completely separates the concealed space and the second floor has a 1-hour fire resistance rating as provided by 20.7.1.2. If the building were four stories in height, the existence of the unsprinklered combustible concealed space between the first and second floors would not affect the design area required on the third and fourth floors of the building.

If the drop ceiling below the floor slab that creates the concealed space is necessary for the 1-hour rating of the floor/ceiling assembly, the design area would apply to the system on the second floor, because the entire fire-resistive assembly (from the bottom of the suspended ceiling to the top of the floor slab) would not be between the concealed space and the area protected by the second floor sprinkler system.

The 3000 ft² (280 m²) design area is intended to be applied after all the other adjustments required by the density/area method of calculation, which means that users should pick their points wisely from the density/area curves. By sliding up the curves to pick the initial point, users can conserve water and make the system design more efficient.

The 3000 ft² (280 m²) design area applies only to sprinklers using the density/area method, so it does not apply to CMSA and ESFR sprinkler systems. Because CMSA and ESFR sprinklers are specifically designed to deal with fires in storage and warehouse occupancies, it is highly unlikely that a fire would be controlled or suppressed by such sprinklers and still have sufficient force to move through a combustible concealed space. Even if a fire did move through such a concealed space, it is assumed that there are sufficient safety factors in the design area to deal with additional sprinklers that might open.

If 9.2.1 does not specifically allow sprinklers to be omitted from a concealed space, then Section 20.7 cannot be used to justify omitting sprinklers from those concealed spaces. The design area cannot be increased to 3000 ft² (280 m²) while sprinklers are omitted from a concealed space that is not addressed by 9.2.1.

20.8 Room Design Method.

20.8.1* The water supply requirements for sprinklers only shall be based upon the room that creates the greatest demand.

A.20.8.1 This subsection allows for calculation of the sprinklers in the largest room, so long as the calculation produces the greatest hydraulic demand among selection of rooms and

2019 Automatic Sprinkler Systems Handbook

Designer's Corner features provide insight into sprinkler system design and installation.

Nonmandatory Annex A material follows its corresponding mandatory text in the standard.

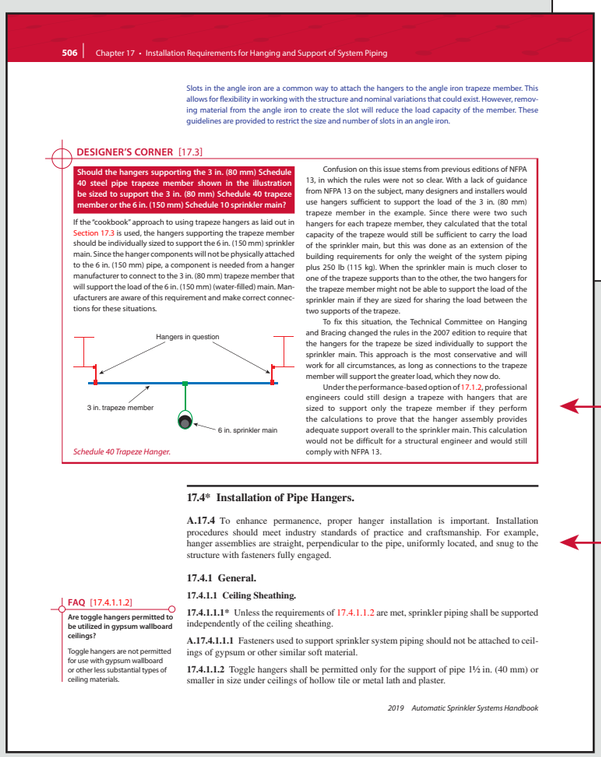

506 | Chapter 17 • Installation Requirements for Hanging and Support of System Piping

Slots in the angle iron are a common way to attach the hangers to the angle iron trapeze member. This allows for flexibility in working with the structure and nominal variations that could exist. However, removing material from the angle iron to create the slot will reduce the load capacity of the member. These guidelines are provided to restrict the size and number of slots in an angle iron.

DESIGNER'S CORNER [17.3]

Should the hangers supporting the 3 in. (80 mm) Schedule 40 steel pipe trapeze member shown in the illustration be sized to support the 3 in. (80 mm) Schedule 40 trapeze member or the 6 in. (150 mm) Schedule 10 sprinkler main?

If the "cookbook" approach to using trapeze hangers as laid out in Section 17.3 is used, the hangers supporting the trapeze member should be individually sized to support the 6 in. (150 mm) sprinkler main. Since the hanger components will not be physically attached to the 6 in. (150 mm) pipe, a component is needed from a hanger manufacturer to connect to the 3 in. (80 mm) trapeze member that will support the load of the 6 in. (150 mm) (water-filled) main. Manufacturers are aware of this requirement and make correct connections for these situations.

Schedule 40 Trapeze Hanger.

Confusion on this issue stems from previous editions of NFPA 13, in which the rules were not so clear. With a lack of guidance from NFPA 13 on the subject, many designers and installers would use hangers sufficient to support the load of the 3 in. (80 mm) trapeze member in the example. Since there were two such hangers for each trapeze member, they calculated that the total capacity of the trapeze would still be sufficient to carry the load of the sprinkler main, but this was done as an extension of the building requirements for only the weight of the system piping plus 250 lb (115 kg). When the sprinkler main is much closer to one of the trapeze supports than to the other, the two hangers for the trapeze member might not be able to support the load of the sprinkler main if they are sized for sharing the load between the two supports of the trapeze.

To fix this situation, the Technical Committee on Hanging and Bracing changed the rules in the 2007 edition to require that the hangers for the trapeze be sized individually to support the sprinkler main. This approach is the most conservative and will work for all circumstances, as long as connections to the trapeze member will support the greater load, which they now do.

Under the performance-based option of 17.1.2, professional engineers could still design a trapeze with hangers that are sized to support only the trapeze member if they perform the calculations to prove that the hanger assembly provides adequate support overall to the sprinkler main. This calculation would not be difficult for a structural engineer and would still comply with NFPA 13.

17.4* Installation of Pipe Hangers.

A.17.4 To enhance permanence, proper hanger installation is important. Installation procedures should meet industry standards of practice and craftsmanship. For example, hanger assemblies are straight, perpendicular to the pipe, uniformly located, and snug to the structure with fasteners fully engaged.

17.4.1 General.

17.4.1.1 Ceiling Sheathing.

17.4.1.1.1* Unless the requirements of 17.4.1.1.2 are met, sprinkler piping shall be supported independently of the ceiling sheathing.

A.17.4.1.1.1 Fasteners used to support sprinkler system piping should not be attached to ceilings of gypsum or other similar soft material.

17.4.1.1.2 Toggle hangers shall be permitted only for the support of pipe 1½ in. (40 mm) or smaller in size under ceilings of hollow tile or metal lath and plaster.

FAQ [17.4.1.1.2]

Are toggle hangers permitted to be utilized in gypsum wallboard ceilings?

Toggle hangers are not permitted for use with gypsum wallboard or other less substantial types of ceiling materials.

2019 Automatic Sprinkler Systems Handbook

Detailed exhibits help users to better visualize equipment, systems, and concepts.

FAQs provide detailed answers to questions commonly asked of the NFPA 13 staff.

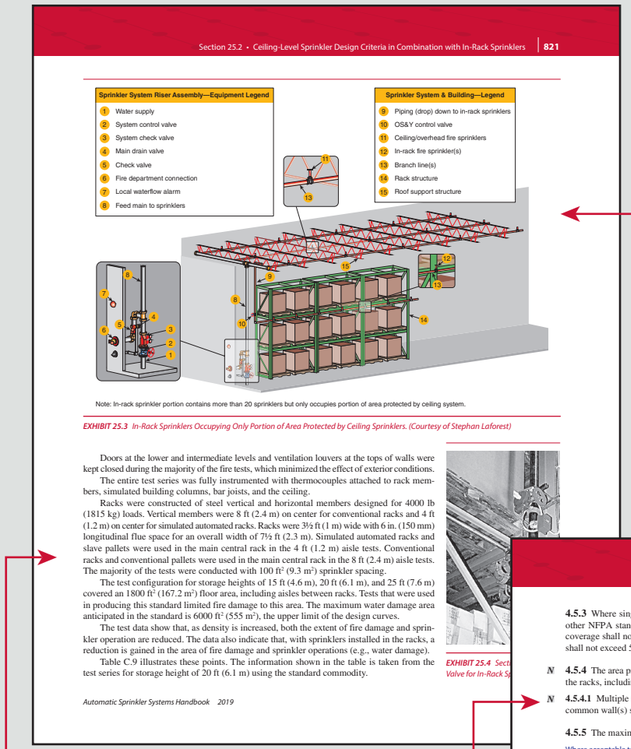

Section 25.2 • Ceiling-Level Sprinkler Design Criteria in Combination with In-Rack Sprinklers | 821

Sprinkler System Riser Assembly—Equipment Legend

1. Water supply
2. System control valve
3. System check valve
4. Main drain valve
5. Check valve
6. Fire department connection
7. Local waterflow alarm
8. Feed main to sprinklers

Sprinkler System & Building—Legend

9. Piping (drop) down to in-rack sprinklers
10. OS&Y control valve
11. Ceiling/overhead fire sprinklers
12. In-rack fire sprinkler(s)
13. Branch line(s)
14. Rack structure
15. Roof support structure

Note: In-rack sprinkler portion contains more than 20 sprinklers but only occupies portion of area protected by ceiling system.

EXHIBIT 25.3 In-Rack Sprinklers Occupying Only Portion of Area Protected by Ceiling Sprinklers. (Courtesy of Stephan Laforest)

Doors at the lower and intermediate levels and ventilation louvers at the tops of walls were kept closed during the majority of the fire tests, which minimized the effect of exterior conditions.

The entire test series was fully instrumented with thermocouples attached to rack members, simulated building columns, bar joists, and the ceiling.

Racks were constructed of steel vertical and horizontal members designed for 4000 lb (1815 kg) loads. Vertical members were 8 ft (2.4 m) on center for conventional racks and 4 ft (1.2 m) on center for simulated automated racks. Racks were 3½ ft (1 m) wide with 6 in. (150 mm) longitudinal flue space for an overall width of 7½ ft (2.3 m). Simulated automated racks and slave pallets were used in the main central rack in the 4 ft (1.2 m) aisle tests. Conventional racks and conventional pallets were used in the main central rack in the 8 ft (2.4 m) aisle tests. The majority of the tests were conducted with 100 ft² (9.3 m²) sprinkler spacing.

The test configuration for storage heights of 15 ft (4.6 m), 20 ft (6.1 m), and 25 ft (7.6 m) covered an 1800 ft² (167.2 m²) floor area, including aisles between racks. Tests that were used in producing this standard limited fire damage to this area. The maximum water damage area anticipated in the standard is 6000 ft² (555 m²), the upper limit of the design curves.

The test data show that, as density is increased, both the extent of fire damage and sprinkler operation are reduced. The data also indicate that, with sprinklers installed in the racks, a reduction is gained in the area of fire damage and sprinkler operations (e.g., water damage).

Table C.9 illustrates these points. The information shown in the table is taken from the test series for storage height of 20 ft (6.1 m) using the standard commodity.

EXHIBIT 25.4 Sect Valve for In-Rack Sp

Automatic Sprinkler Systems Handbook 2019

Nonmandatory Annex C material follows its corresponding mandatory text in the standard.

"N" icons indicate a section, figure, or table that is new for this edition of the standard.

Ask the AHJ features provide insight into questions that authorities having jurisdiction often have to answer.

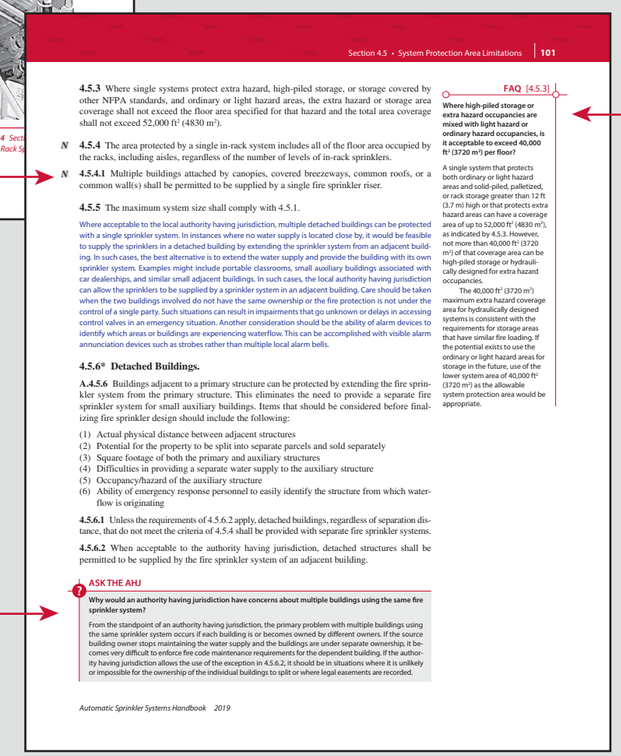

Section 4.5 • System Protection Area Limitations | 101

4.5.3 Where single systems protect extra hazard, high-piled storage, or storage covered by other NFPA standards, and ordinary or light hazard areas, the extra hazard or storage area coverage shall not exceed the floor area specified for that hazard and the total area coverage shall not exceed 52,000 ft² (4830 m²).

N **4.5.4** The area protected by a single in-rack system includes all of the floor area occupied by the racks, including aisles, regardless of the number of levels of in-rack sprinklers.

N **4.5.4.1** Multiple buildings attached by canopies, covered breezeways, common roofs, or a common wall(s) shall be permitted to be supplied by a single fire sprinkler riser.

4.5.5 The maximum system size shall comply with 4.5.1.

Where acceptable to the local authority having jurisdiction, multiple detached buildings can be protected with a single sprinkler system. In instances where no water supply is located close by, it would be feasible to supply the sprinklers in a detached building by extending the sprinkler system from an adjacent building. In such cases, the best alternative is to extend the water supply and provide the building with its own sprinkler system. Examples might include portable classrooms, small auxiliary buildings associated with car dealerships, and similar small adjacent buildings. In such cases, the local authority having jurisdiction can allow the sprinklers to be supplied by a sprinkler system in an adjacent building. Care should be taken when the two buildings involved do not have the same ownership or the fire protection is not under the control of a single party. Such situations can result in impairments that go unknown or delays in accessing control valves in an emergency situation. Another consideration should be the ability of alarm devices to identify which areas or buildings are experiencing waterflow. This can be accomplished with visible alarm annunciation devices such as strobes rather than multiple local alarm bells.

4.5.6* Detached Buildings.

A.4.5.6 Buildings adjacent to a primary structure can be protected by extending the fire sprinkler system from the primary structure. This eliminates the need to provide a separate fire sprinkler system for small auxiliary buildings. Items that should be considered before finalizing fire sprinkler design should include the following:

(1) Actual physical distance between adjacent structures
(2) Potential for the property to be split into separate parcels and sold separately
(3) Square footage of both the primary and auxiliary structures
(4) Difficulties in providing a separate water supply to the auxiliary structure
(5) Occupancy/hazard of the auxiliary structure
(6) Ability of emergency response personnel to easily identify the structure from which waterflow is originating

4.5.6.1 Unless the requirements of 4.5.6.2 apply, detached buildings, regardless of separation distance, that do not meet the criteria of 4.5.4 shall be provided with separate fire sprinkler systems.

4.5.6.2 When acceptable to the authority having jurisdiction, detached structures shall be permitted to be supplied by the fire sprinkler system of an adjacent building.

ASK THE AHJ

Why would an authority having jurisdiction have concerns about multiple buildings using the same fire sprinkler system?

From the standpoint of an authority having jurisdiction, the primary problem with multiple buildings using the same sprinkler system occurs if each building is or becomes owned by different owners. If the source building owner stops maintaining the water supply and the buildings are under separate ownership, it becomes very difficult to enforce fire code maintenance requirements for the dependent building. If the authority having jurisdiction allows the use of the exception in 4.5.6.2, it should be in situations where it is unlikely or impossible for the ownership of the individual buildings to split or where legal easements are recorded.

FAQ [4.5.3]

Where high-piled storage or extra hazard occupancies are mixed with light hazard or ordinary hazard occupancies, is it acceptable to exceed 40,000 ft² (3720 m²) per floor?

A single system that protects both ordinary or light hazard areas and solid-piled, palletized, or rack storage greater than 12 ft (3.7 m) high or that protects extra hazard areas can have a coverage area of up to 52,000 ft² (4830 m²), as indicated by 4.5.3. However, not more than 40,000 ft² (3720 m²) of that coverage area can be high-piled storage or hydraulically designed for extra hazard occupancies.

The 40,000 ft² (3720 m²) maximum extra hazard coverage area for hydraulically designed systems is consistent with the requirements for storage areas that have similar fire loading. If the potential exists to use the ordinary or light hazard areas for storage in the future, use of the lower system area of 40,000 ft² (3720 m²) as the allowable system protection area would be appropriate.

Automatic Sprinkler Systems Handbook 2019

EDUFIRE.IR

Features of the *Automatic Sprinkler Systems Handbook*, 2019 Edition

The 2019 edition of the *Automatic Sprinkler Systems Handbook* contains the complete mandatory text of the 2019 edition of NFPA 13, *Standard for the Installation of Sprinkler Systems*, as well as expert commentary to assist users in their understanding and application of the standard. In addition to the commentary text, this edition of the handbook also offers a number of helpful features, which are described below.

Shading indicates where text has changed from the previous edition of the standard.

Commentary text is colored blue to distinguish it from the text of the standard.

Closer Look features provide further information on selected topics from the standard.

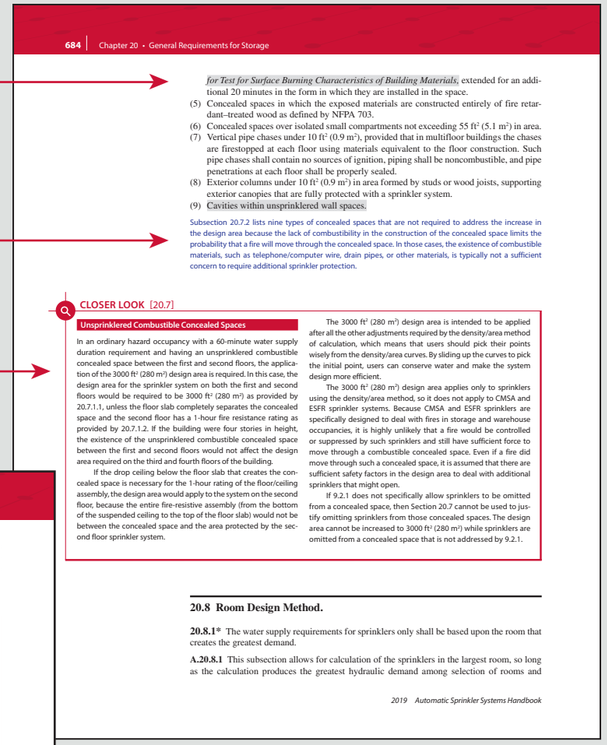

684 | Chapter 20 • General Requirements for Storage

for Test for Surface Burning Characteristics of Building Materials, extended for an additional 20 minutes in the form in which they are installed in the space.

(5) Concealed spaces in which the exposed materials are constructed entirely of fire retardant–treated wood as defined by NFPA 703.
(6) Concealed spaces over isolated small compartments not exceeding 55 ft² (5.1 m²) in area.
(7) Vertical pipe chases under 10 ft² (0.9 m²), provided that in multifloor buildings the chases are firestopped at each floor using materials equivalent to the floor construction. Such pipe chases shall contain no sources of ignition, piping shall be noncombustible, and pipe penetrations at each floor shall be properly sealed.
(8) Exterior columns under 10 ft² (0.9 m²) in area formed by studs or wood joists, supporting exterior canopies that are fully protected with a sprinkler system.
(9) Cavities within unsprinklered wall spaces.

Subsection 20.7.2 lists nine types of concealed spaces that are not required to address the increase in the design area because the lack of combustibility in the construction of the concealed space limits the probability that a fire will move through the concealed space. In those cases, the existence of combustible materials, such as telephone/computer wire, drain pipes, or other materials, is typically not a sufficient concern to require additional sprinkler protection.

CLOSER LOOK [20.7]

Unsprinklered Combustible Concealed Spaces

In an ordinary hazard occupancy with a 60-minute water supply duration requirement and having an unsprinklered combustible concealed space between the first and second floors, the application of the 3000 ft² (280 m²) design area is required. In this case, the design area for the sprinkler system on both the first and second floors would be required to be 3000 ft² (280 m²) as provided by 20.7.1.1, unless the floor slab completely separates the concealed space and the second floor has a 1-hour fire resistance rating as provided by 20.7.1.2. If the building were four stories in height, the existence of the unsprinklered combustible concealed space between the first and second floors would not affect the design area required on the third and fourth floors of the building.

If the drop ceiling below the floor slab that creates the concealed space is necessary for the 1-hour rating of the floor/ceiling assembly, the design area would apply to the system on the second floor, because the entire fire-resistive assembly (from the bottom of the suspended ceiling to the top of the floor slab) would not be between the concealed space and the area protected by the second floor sprinkler system.

The 3000 ft² (280 m²) design area is intended to be applied after all the other adjustments required by the density/area method of calculation, which means that users should pick their points wisely from the density/area curves. By sliding up the curves to pick the initial point, users can conserve water and make the system design more efficient.

The 3000 ft² (280 m²) design area applies only to sprinklers using the density/area method, so it does not apply to CMSA and ESFR sprinkler systems. Because CMSA and ESFR sprinklers are specifically designed to deal with fires in storage and warehouse occupancies, it is highly unlikely that a fire would be controlled or suppressed by such sprinklers and still have sufficient force to move through a combustible concealed space. Even if a fire did move through such a concealed space, it is assumed that there are sufficient safety factors in the design area to deal with additional sprinklers that might open.

If 9.2.1 does not specifically allow sprinklers to be omitted from a concealed space, then Section 20.7 cannot be used to justify omitting sprinklers from those concealed spaces. The design area cannot be increased to 3000 ft² (280 m²) while sprinklers are omitted from a concealed space that is not addressed by 9.2.1.

20.8 Room Design Method.

20.8.1* The water supply requirements for sprinklers only shall be based upon the room that creates the greatest demand.

A.20.8.1 This subsection allows for calculation of the sprinklers in the largest room, so long as the calculation produces the greatest hydraulic demand among selection of rooms and

2019 Automatic Sprinkler Systems Handbook

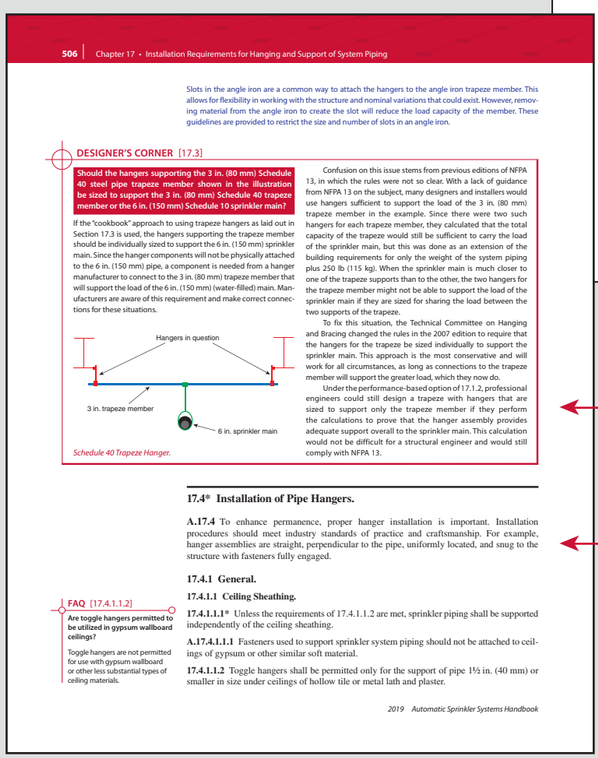

506 | Chapter 17 • Installation Requirements for Hanging and Support of System Piping

Slots in the angle iron are a common way to attach the hangers to the angle iron trapeze member. This allows for flexibility in working with the structure and nominal variations that could exist. However, removing material from the angle iron to create the slot will reduce the load capacity of the member. These guidelines are provided to restrict the size and number of slots in an angle iron.

DESIGNER'S CORNER [17.3]

Should the hangers supporting the 3 in. (80 mm) Schedule 40 steel pipe trapeze member shown in the illustration be sized to support the 3 in. (80 mm) Schedule 40 trapeze member or the 6 in. (150 mm) Schedule 10 sprinkler main?

If the "cookbook" approach to using trapeze hangers as laid out in Section 17.3 is used, the hangers supporting the trapeze member should be individually sized to support the 6 in. (150 mm) sprinkler main. Since the hanger components will not be physically attached to the 6 in. (150 mm) pipe, a component is needed from a hanger manufacturer to connect to the 3 in. (80 mm) trapeze member that will support the load of the 6 in. (150 mm) (water-filled) main. Manufacturers are aware of this requirement and make correct connections for these situations.

Schedule 40 Trapeze Hanger.

Confusion on this issue stems from previous editions of NFPA 13, in which the rules were not so clear. With a lack of guidance from NFPA 13 on the subject, many designers and installers would use hangers sufficient to support the load of the 3 in. (80 mm) trapeze member in the example. Since there were two such hangers for each trapeze member, they calculated that the total capacity of the trapeze would still be sufficient to carry the load of the sprinkler main, but this was done as an extension of the building requirements for only the weight of the system piping plus 250 lb (115 kg). When the sprinkler main is much closer to one of the trapeze supports than to the other, the two hangers for the trapeze member might not be able to support the load of the sprinkler main if they are sized for sharing the load between the two supports of the trapeze.

To fix this situation, the Technical Committee on Hanging and Bracing changed the rules in the 2007 edition to require that the hangers for the trapeze be sized individually to support the sprinkler main. This approach is the most conservative and will work for all circumstances, as long as connections to the trapeze member will support the greater load, which they now do.

Under the performance-based option of 17.1.2, professional engineers could still design a trapeze with hangers that are sized to support only the trapeze member if they perform the calculations to prove that the hanger assembly provides adequate support overall to the sprinkler main. This calculation would not be difficult for a structural engineer and would still comply with NFPA 13.

17.4* Installation of Pipe Hangers.

A.17.4 To enhance permanence, proper hanger installation is important. Installation procedures should meet industry standards of practice and craftsmanship. For example, hanger assemblies are straight, perpendicular to the pipe, uniformly located, and snug to the structure with fasteners fully engaged.

17.4.1 General.

17.4.1.1 Ceiling Sheathing.

17.4.1.1.1* Unless the requirements of 17.4.1.1.2 are met, sprinkler piping shall be supported independently of the ceiling sheathing.

A.17.4.1.1.1 Fasteners used to support sprinkler system piping should not be attached to ceilings of gypsum or other similar soft material.

17.4.1.1.2 Toggle hangers shall be permitted only for the support of pipe 1½ in. (40 mm) or smaller in size under ceilings of hollow tile or metal lath and plaster.

FAQ [17.4.1.1.2]

Are toggle hangers permitted to be utilized in gypsum wallboard ceilings?

Toggle hangers are not permitted for use with gypsum wallboard or other less substantial types of ceiling materials.

2019 Automatic Sprinkler Systems Handbook

Designer's Corner features provide insight into sprinkler system design and installation.

Nonmandatory Annex A material follows its corresponding mandatory text in the standard.

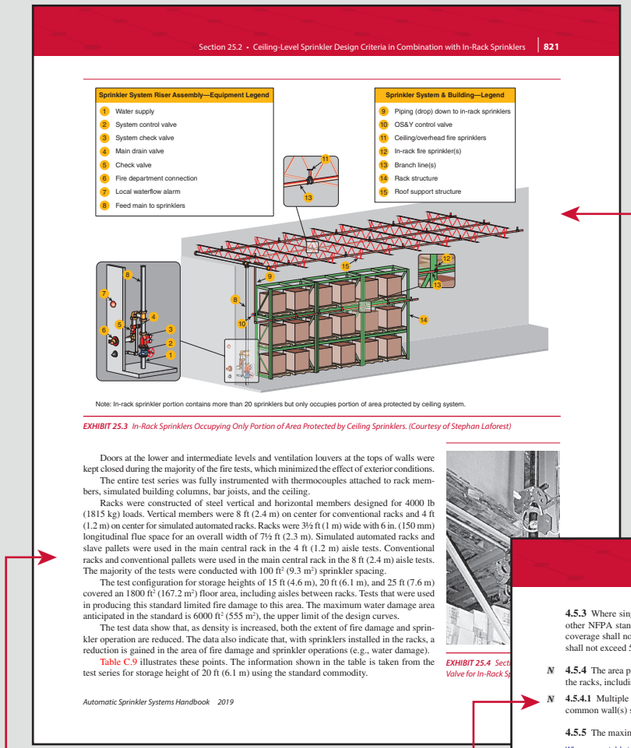

Section 25.2 • Ceiling-Level Sprinkler Design Criteria in Combination with In-Rack Sprinklers | 821

Sprinkler System Riser Assembly—Equipment Legend

1. Water supply
2. System control valve
3. System check valve
4. Main drain valve
5. Check valve
6. Fire department connection
7. Local waterflow alarm
8. Feed main to sprinklers

Sprinkler System & Building—Legend

9. Piping (drop) down to in-rack sprinklers
10. OS&Y control valve
11. Ceiling/overhead fire sprinklers
12. In-rack fire sprinkler(s)
13. Branch line(s)
14. Rack structure
15. Roof support structure

Note: In-rack sprinkler portion contains more than 20 sprinklers but only occupies portion of area protected by ceiling system.

EXHIBIT 25.3 In-Rack Sprinklers Occupying Only Portion of Area Protected by Ceiling Sprinklers. (Courtesy of Stephan Laforest)

Doors at the lower and intermediate levels and ventilation louvers at the tops of walls were kept closed during the majority of the fire tests, which minimized the effect of exterior conditions.

The entire test series was fully instrumented with thermocouples attached to rack members, simulated building columns, bar joists, and the ceiling.

Racks were constructed of steel vertical and horizontal members designed for 4000 lb (1815 kg) loads. Vertical members were 8 ft (2.4 m) on center for conventional racks and 4 ft (1.2 m) on center for simulated automated racks. Racks were 3½ ft (1 m) wide with 6 in. (150 mm) longitudinal flue space for an overall width of 7½ ft (2.3 m). Simulated automated racks and slave pallets were used in the main central rack in the 4 ft (1.2 m) aisle tests. Conventional racks and conventional pallets were used in the main central rack in the 8 ft (2.4 m) aisle tests. The majority of the tests were conducted with 100 ft² (9.3 m²) sprinkler spacing.

The test configuration for storage heights of 15 ft (4.6 m), 20 ft (6.1 m), and 25 ft (7.6 m) covered an 1800 ft² (167.2 m²) floor area, including aisles between racks. Tests that were used in producing this standard limited fire damage to this area. The maximum water damage area anticipated in the standard is 6000 ft² (555 m²), the upper limit of the design curves.

The test data show that, as density is increased, both the extent of fire damage and sprinkler operation are reduced. The data also indicate that, with sprinklers installed in the racks, a reduction is gained in the area of fire damage and sprinkler operations (e.g., water damage).

Table C.9 illustrates these points. The information shown in the table is taken from the test series for storage height of 20 ft (6.1 m) using the standard commodity.

EXHIBIT 25.4 Sect Valve for In-Rack Sp

Automatic Sprinkler Systems Handbook 2019

Detailed exhibits help users to better visualize equipment, systems, and concepts.

FAQs provide detailed answers to questions commonly asked of the NFPA 13 staff.

Nonmandatory Annex C material follows its corresponding mandatory text in the standard.

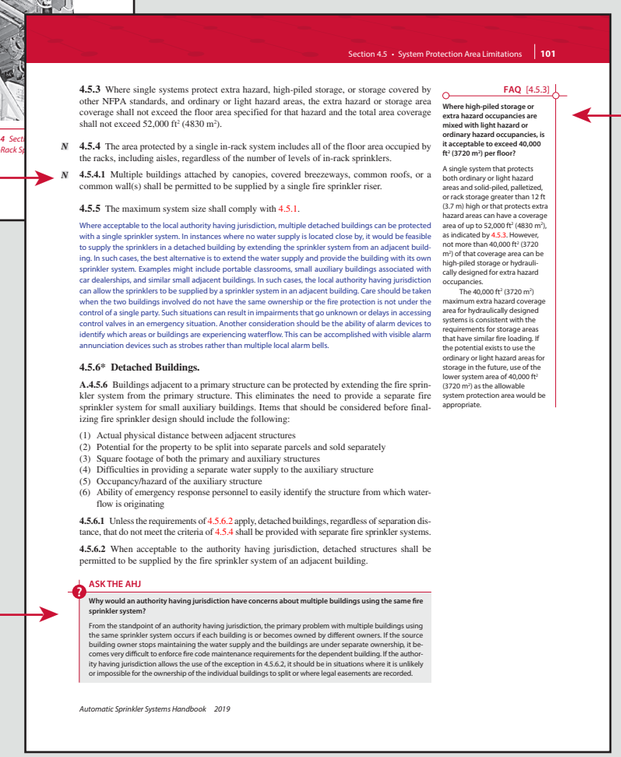

Section 4.5 • System Protection Area Limitations | 101

4.5.3 Where single systems protect extra hazard, high-piled storage, or storage covered by other NFPA standards, and ordinary or light hazard areas, the extra hazard or storage area coverage shall not exceed the floor area specified for that hazard and the total area coverage shall not exceed 52,000 ft² (4830 m²).

N **4.5.4** The area protected by a single in-rack system includes all of the floor area occupied by the racks, including aisles, regardless of the number of levels of in-rack sprinklers.

N **4.5.4.1** Multiple buildings attached by canopies, covered breezeways, common roofs, or a common wall(s) shall be permitted to be supplied by a single fire sprinkler riser.

4.5.5 The maximum system size shall comply with 4.5.1.

Where acceptable to the local authority having jurisdiction, multiple detached buildings can be protected with a single sprinkler system. In instances where no water supply is located close by, it would be feasible to supply the sprinklers in a detached building by extending the sprinkler system from an adjacent building. In such cases, the best alternative is to extend the water supply and provide the building with its own sprinkler system. Examples might include portable classrooms, small auxiliary buildings associated with car dealerships, and similar small adjacent buildings. In such cases, the local authority having jurisdiction can allow the sprinklers to be supplied by a sprinkler system in an adjacent building. Care should be taken when the two buildings involved do not have the same ownership or the fire protection is not under the control of a single party. Such situations can result in impairments that go unknown or delays in accessing control valves in an emergency situation. Another consideration should be the ability of alarm devices to identify which areas or buildings are experiencing waterflow. This can be accomplished with visible alarm annunciation devices such as strobes rather than multiple local alarm bells.

4.5.6* Detached Buildings.

A.4.5.6 Buildings adjacent to a primary structure can be protected by extending the fire sprinkler system from the primary structure. This eliminates the need to provide a separate fire sprinkler system for small auxiliary buildings. Items that should be considered before finalizing fire sprinkler design should include the following:

(1) Actual physical distance between adjacent structures
(2) Potential for the property to be split into separate parcels and sold separately
(3) Square footage of both the primary and auxiliary structures
(4) Difficulties in providing a separate water supply to the auxiliary structure
(5) Occupancy/hazard of the auxiliary structure
(6) Ability of emergency response personnel to easily identify the structure from which waterflow is originating

4.5.6.1 Unless the requirements of 4.5.6.2 apply, detached buildings, regardless of separation distance, that do not meet the criteria of 4.5.4 shall be provided with separate fire sprinkler systems.

4.5.6.2 When acceptable to the authority having jurisdiction, detached structures shall be permitted to be supplied by the fire sprinkler system of an adjacent building.

ASK THE AHJ

Why would an authority having jurisdiction have concerns about multiple buildings using the same fire sprinkler system?

From the standpoint of an authority having jurisdiction, the primary problem with multiple buildings using the same sprinkler system occurs if each building is or becomes owned by different owners. If the source building owner stops maintaining the water supply and the buildings are under separate ownership, it becomes very difficult to enforce fire code maintenance requirements for the dependent building. If the authority having jurisdiction allows the use of the exception in 4.5.6.2, it should be in situations where it is unlikely or impossible for the ownership of the individual buildings to split or where legal easements are recorded.

FAQ [4.5.3]

Where high-piled storage or extra hazard occupancies are mixed with light hazard or ordinary hazard occupancies, is it acceptable to exceed 40,000 ft² (3720 m²) per floor?

A single system that protects both ordinary or light hazard areas and solid-piled, palletized, or rack storage greater than 12 ft (3.7 m) high or that protects extra hazard areas can have a coverage area of up to 52,000 ft² (4830 m²), as indicated by 4.5.3. However, not more than 40,000 ft² (3720 m²) of that coverage area can be high-piled storage or hydraulically designed for extra hazard occupancies.

The 40,000 ft² (3720 m²) maximum extra hazard coverage area for hydraulically designed systems is consistent with the requirements for storage areas that have similar fire loading. If the potential exists to use the ordinary or light hazard areas for storage in the future, use of the lower system area of 40,000 ft² (3720 m²) as the allowable system protection area would be appropriate.

Automatic Sprinkler Systems Handbook 2019

"N" icons indicate a section, figure, or table that is new for this edition of the standard.

Ask the AHJ features provide insight into questions that authorities having jurisdiction often have to answer.

EDUFIRE.IR

Reorganization for 2019

tems. Information is now clearly separated by subject matter, and the chapter order follows a logical progression based on when each piece of information is needed in the planning and design of a system. Due to this extensive reorganization, the following features are provided to assist users familiar with the 2016 edition to locate material in the 2019 edition.

General Requirements

CHAPTER 4

REORGANIZATION NOTE

Chapter 4 has been revised for 2019 to truly contain the general information needed for a fire sprinkler system. It begins with the expected level of protection and goes on to cover the owner's certificate, as it has in previous editions. It now includes occupancy classification, as that is the primary step necessary in the layout and detail of a fire sprinkler system. Miscellaneous and low-piled storage have been incorporated into the occupancy classifications so that the user stays in the occupancy requirements for protection, eliminating the confusion with applying design methods and other criteria. High-piled storage is mentioned only as a pointer to the storage chapters. Limitations on system size also have been moved into Chapter 4.

Chapter 4 contains the general requirements that apply to all of NFPA 13 and, in general, all systems designed and installed in accordance with NFPA 13. Chapter 20, General Requirements for Storage, provides additional requirements that apply specifically to design and installation requirements for storage occupancies. Items covered include level of protection, limited area systems, owner's certificate, the prohibited use of additives for stopping leaks in sprinkler systems, the use of air or nitrogen, and the support of components not included in the sprinkler system. Much of the information in Chapter 4 is addressed in other sections of the standard, but emphasizing this information in this chapter was deemed appropriate by the technical committee on sprinkler system discharge.

FAQ [4.1]

Does my building require a sprinkler system?

NFPA 13 is an installation

Reorganization Notes provide a brief overview of what content from the 2016 edition makes up each chapter of the 2019 edition.

4.1 Level of Protection.

4.1.1 A building, where protected by an auto
provided with sprinklers in all areas except whe
omission of sprinklers.

The oldest and most important design concept of NFP
a building. This requirement dates back to the first edi
the statement "sprinklers to be placed throughout pr
of sprinklers. This philosophy is part of the original insu
tection that founded the standard. To truly minimize r
insurance is no longer the primary driver for requiring
role has shifted over time to the building and fire code
that is fully compliant with the building code and or
this occurs, it should not be viewed as a limited area s
throughout the portion of the building containing the
sprinklered throughout, even when portions of the
omissions permitted by NFPA 13.

The format of the standard is not written to ident
NFPA 13 requires sprinklers throughout the portion o
even though it usually is the entire building that is t
associated with specific conditions and are relatively r

Shaded text = Revisions for this edition. *N*

2016–2019 ROADMAP

This roadmap has been compiled to assist users familiar with the 2016 edition of the *Standard for the Installation of Sprinkler Systems* with locating material in the 2019 edition. It is provided for information only and should not be relied upon as the only means of determining the disposition of requirements.

An asterisk on a section number indicates that there is explanatory material for that section in Annex A. While annex sections are not included in this table, all retained annex sections have been moved with the parent paragraph.

2016 Edition Section Numbers	2019 Edition Section Numbers
Chapter 1 Administration	Chapter 1 Administration
1.1*	1.1*
1.1.1	1.1.1
1.1.2	1.1.2
1.1.3*	1.1.3*
1.2	1.2
1.2.1	1.2.1
1.2.2	1.2.2
1.3	1.3
1.3.1	1.3.1
1.3.2	1.3.3
1.4	1.4
1.4.1	1.4.1
1.4.2	1.4.2
1.4.3	1.4.3
1.5	1.5
1.5.1	1.5.1
1.5.2	1.5.2
1.6	1.6
1.6.1	1.6.1
1.6.1.1	1.6.1.1
1.6.1.2	1.6.1.2

2016 Edition Section Numbers	2019 Edition Section Numbers
3.3.4*	3.3.25*
3.3.5	3.3.26
3.3.5.1	3.3.33
3.3.5.2	3.3.26.1
3.3.5.3	3.3.26.2
3.3.5.4	3.3.26.3
3.3.5.5	3.3.26.4
3.3.6	3.3.39
3.3.7*	3.3.46*
3.3.8*	3.3.57*
3.3.9	3.3.58
3.3.10	3.3.62
3.3.11	3.3.73
3.3.12	3.3.76
3.3.13	3.3.86
3.3.14	3.3.93
3.3.15	3.3.104
3.3.16*	3.3.114*
3.3.17	3.3.129
3.3.18	3.3.133
3.3.18.1	3.3.133.1
3.3.18.2	3.3.133.2
3.3.19*	3.3.174*

2016 Edition Section Numbers	2019 Edition Section Numbers
3.5.5	3.3.53
3.5.6	3.3.68
3.5.7	3.3.72
3.5.8	3.3.78
3.5.9	3.3.180
3.5.10	3.3.181
3.5.11	3.3.204
3.5.12	3.3.213
3.5.13	3.3.215
3.5.14	3.3.226
3.6	3.3.205
3.6.1*	3.3.205.2*
3.6.2	3.3.205.3
3.6.2.1	3.3.205.3.1
3.6.2.2	3.3.205.3.2
3.6.2.3	3.3.205.3.3
3.6.2.4	3.3.205.3.4
3.6.2.5	3.3.205.3.5
3.6.2.6	3.3.205.3.6
3.6.3	Deleted
3.6.3.1	3.3.205.4.3
3.6.3.2*	3.3.205.4.4*
3.6.3.3	3.3.205.4.7

The 2016–2019 Roadmap cross references section numbers of the 2016 edition to the 2019 edition. It can be found at the end of the book.

nfpa.org/13

Visit the NFPA 13 document information page (http://www.nfpa.org/13) for up-to-date, document-specific information, including any issued Tentative Interim Amendments and Errata. The document information page also provides users with the option to register for an "Alert" feature to receive an automatic email notification when new updates and other information are posted regarding the document.

EDUFIRE.IR

Product Management: Debra Rose
Development and Production: Ken Ritchie
Copyediting: Nancy Wirtes
Permissions: Tracy Gaudet

Art Direction and Interior Design: Cheryl Langway
Cover Design: Twist Creative Group
Composition: Cenveo Publisher Services
Printing/Binding: Webcrafters Inc.

Copyright © 2018
National Fire Protection Association®
One Batterymarch Park
Quincy, Massachusetts 02169-7471

All rights reserved.

Important Notices and Disclaimers: Publication of this handbook is for the purpose of circulating information and opinion among those concerned for fire and electrical safety and related subjects. While every effort has been made to achieve a work of high quality, neither the NFPA® nor the contributors to this handbook guarantee or warrantee the accuracy or completeness of or assume any liability in connection with the information and opinions contained in this handbook. The NFPA and the contributors shall in no event be liable for any personal injury, property, or other damages of any nature whatsoever, whether special, indirect, consequential, or compensatory, directly or indirectly resulting from the publication, use of, or reliance upon this handbook.

This handbook is published with the understanding that the NFPA and the contributors to this handbook are supplying information and opinion but are not attempting to render engineering or other professional services. If such services are required, the assistance of an appropriate professional should be sought.

NFPA 13, *Standard for the Installation of Sprinkler Systems* ("NFPA 13"), is, like all NFPA codes, standards, recommended practices, and guides ("NFPA Standards"), made available for use subject to Important Notices and Legal Disclaimers, which appear at the end of this handbook and can also be viewed at *www.nfpa.org/disclaimers.*

Notice Concerning Code Interpretations: This fourteenth edition of the *Automatic Sprinkler Systems Handbook* is based on the 2019 edition of NFPA 13. All NFPA codes, standards, recommended practices, and guides ("NFPA Standards") are developed in accordance with the published procedures of the NFPA by technical committees comprised of volunteers drawn from a broad array of relevant interests. The handbook contains the complete text of NFPA 13 and any applicable Formal Interpretations issued by the NFPA at the time of publication. This NFPA Standard is accompanied by explanatory commentary and other supplementary materials.

The commentary and supplementary materials in this handbook are not a part of the NFPA Standard and do not constitute Formal Interpretations of the NFPA (which can be obtained only through requests processed by the responsible technical committees in accordance with the published procedures of the NFPA). The commentary and supplementary materials, therefore, solely reflect the personal opinions of the editor or other contributors and do not necessarily represent the official position of the NFPA or its technical committees.

REMINDER: UPDATING OF NFPA STANDARDS

NFPA 13, *Standard for the Installation of Sprinkler Systems*, like all NFPA codes, standards, recommended practices, and guides ("NFPA Standards"), may be amended from time to time through the issuance of Tentative Interim Amendments or corrected by Errata. An official NFPA Standard at any point in time consists of the current edition of the document together with any Tentative Interim Amendment and any Errata then in effect. In order to determine whether an NFPA Standard has been amended through the issuance of Tentative Interim Amendments or corrected by Errata, visit the "Codes & Standards" section on NFPA's website. There, the document information pages located at the "List of NFPA Codes & Standards" provide up-to-date, document-specific information, including any issued Tentative Interim Amendments and Errata. To view the document information page for a specific NFPA Standard, go to http://www.nfpa.org/docinfo to choose from the list of NFPA Standards, or use the search feature to select the NFPA Standard number (e.g., NFPA 13). The document information page includes postings of all existing Tentative Interim Amendments and Errata. It also includes the option to register for an "Alert" feature to receive an automatic email notification when new updates and other information are posted regarding the document.

The following are registered trademarks of the National Fire Protection Association:

National Fire Protection Association®
NFPA®
NFPA 70®, National Electrical Code®
NFPA 72®, National Fire Alarm and Signaling Code®
NFPA 101®, Life Safety Code®
NFPA 5000®, Building Construction and Safety Code®

NFPA No.: 13HB19

ISBN (PDF): 978-1-4559-1-9796
ISBN (e-book): 978-1-4559-1-9703

ISSN: 1939-8913

Printed in the United States of America
18 19 20 21 22 5 4 3 2 1

EDUFIRE.IR

I would like to dedicate this handbook to my wife Cathy and my sons David and Alan for their unending encouragement, sense of humor, and support in all my endeavors. —*Dave*

I would like to dedicate this handbook to my parents, Lynn and Robert Duffy. All of the great things in my life have come thanks to your guidance, sacrifice, and example. Thank you. —*Chad*

EDUFIRE.IR

EDUFIRE.IR

Contents

Preface xi

Acknowledgments xiii

About the Contributors xv

About the Editors xix

1 Administration 1

1.1 Scope 1
1.2 Purpose 3
1.3 Application 4
1.4 Retroactivity 4
1.5 Equivalency 5
1.6 Units and Symbols 6
1.7 New Technology 9

2 Referenced Publications 13

2.1 General 13
2.2 NFPA Publications 14
2.3 Other Publications 14
2.4 References for Extracts in Mandatory Sections 18

3 Definitions 21

3.1 General 21
3.2 NFPA Official Definitions 21
3.3 General Definitions 23

4 General Requirements 85

4.1 Level of Protection 85
4.2 Owner's Certificate 86
4.3 Classification of Hazard 88
4.4 Hose Connections 98
4.5 System Protection Area Limitations 98
4.6 Water Supply Information 102
4.7 Additives 103
4.8 Air, Nitrogen, or Other Approved Gas 103
4.9 Support of Nonsprinkler System Components 104
4.10 Noncombustible Materials and Limited-Combustible Materials 104

5 Water Supplies 107

5.1 General 108
5.2 Types 113

6 Installation of Underground Piping 123

6.1 Piping 123
6.2 Fittings 130
6.3 Connection of Pipe, Fittings, and Appurtenances 131
6.4 Protection of Private Fire Service Mains 132
6.5 Grounding and Bonding 139
6.6 Restraint 139
6.7 Steep Grades 150
6.8 Installation Requirements 150
6.9 Backfilling 152
6.10 Testing and Acceptance 153

7 Requirements for System Components and Hardware 161

7.1 General 161
7.2 Sprinklers 164
7.3 Aboveground Pipe and Tube 171
7.4 Fittings 175
7.5 Joining of Pipe and Fittings 176
7.6 Valves 184
7.7 Waterflow Alarm Devices 184
7.8 Additives and Coatings 184

8 System Types and Requirements 187

8.1 Wet Pipe Systems 187
8.2 Dry Pipe Systems 191
8.3 Preaction Systems and Deluge Systems 207
8.4 Combined Dry Pipe and Preaction Systems for Piers, Terminals, and Wharves 214
8.5 Multi-Cycle Systems 218
8.6 Antifreeze Systems 219

EDUFIRE.IR

8.7 Outside Sprinklers for Protection Against Exposure Fires (Exposure Protection Sprinkler Systems) 228
8.8 Refrigerated Spaces 234
8.9 Commercial-Type Cooking Equipment and Ventilation 241
8.10 Pilot Line Detectors 245

9 Sprinkler Location Requirements 249

9.1 Basic Requirements 249
9.2 Allowable Sprinkler Omission Locations 253
9.3 Special Situations 272
9.4 Use of Sprinklers 286
9.5 Position, Location, Spacing, and Use of Sprinklers 297

10 Installation Requirements for Standard Pendent, Upright, and Sidewall Spray Sprinklers 315

10.1 General 315
10.2 Standard Pendent and Upright Spray Sprinklers 315
10.3 Sidewall Standard Spray Sprinklers 342

11 Installation Requirements for Extended Coverage Upright, Pendent, and Sidewall Spray Sprinklers 355

11.1 General 355
11.2 Extended Coverage Upright and Pendent Spray Sprinklers 355
11.3 Extended Coverage Sidewall Spray Sprinklers 367

12 Installation Requirements for Residential Sprinklers 379

12.1 General 379

13 Installation Requirements for CMSA Sprinklers 397

13.1 General 397
13.2 CMSA Sprinklers 397

14 Installation Requirements for Early Suppression Fast-Response Sprinklers 407

14.1 General 407
14.2 Early Suppression Fast-Response Sprinklers 407

15 Installation Requirements for Special Sprinklers 415

15.1 Open Sprinklers 415
15.2 Special Sprinklers 415
15.3 Dry Sprinklers 416
15.4 Old-Style Sprinklers 419

16 Installation of Piping, Valves, and Appurtenances 421

16.1 Basic Requirements 421
16.2 Sprinkler Installation 423
16.3 Piping Installation 430
16.4 Protection of Piping 436
16.5 Protection of Risers Subject to Mechanical Damage 439
16.6 Provision for Flushing Systems 439
16.7 Air Venting 440
16.8 Fitting Installation 440
16.9 Valves 443
16.10 Drainage 456
16.11 System Attachments 462
16.12 Fire Department Connections 467
16.13 Gauges 474
16.14 System Connections 474
16.15 Hose Connections 479
16.16 Electrical Bonding and Grounding 481
16.17 Signs. (Reserved) 482

17 Installation Requirements for Hanging and Support of System Piping 485

17.1 General 485
17.2 Hanger Components 490
17.3 Trapeze Hangers 499
17.4 Installation of Pipe Hangers 506
17.5 Pipe Stands 518

EDUFIRE.IR

18 Installation Requirements for Seismic Protection 525

18.1 Protection of Piping Against Damage Where Subject to Earthquakes 526
18.2 Flexible Couplings 527
18.3 Seismic Separation Assembly 533
18.4 Clearance 535
18.5 Sway Bracing 538
18.6 Restraint of Branch Lines 587
18.7 Hangers and Fasteners Subject to Earthquakes 593
18.8 Pipe Stands Subject to Earthquakes 595

19 Design Approaches 597

19.1 General 597
19.2 General Design Approaches 597
19.3 Occupancy Hazard Fire Control Approach for Spray Sprinklers 605
19.4 Special Design Approaches 618
19.5 Deluge Systems 621

20 General Requirements for Storage 623

20.1 General 628
20.2 Protection of Storage 629
20.3 Classification of Commodities 629
20.4 Commodity Classes 639
20.5 Storage Arrangement 662
20.6 Building Construction and Storage: Heights and Clearance 673
20.7 Unsprinklered Combustible Concealed Spaces 682
20.8 Room Design Method 684
20.9 High-Expansion Foam Systems 685
20.10 Adjacent Hazards or Design Methods 687
20.11 Hose Connections 690
20.12 Hose Stream Allowance and Water Supply Duration 691
20.13 Discharge Considerations: General 695
20.14 Protection of Idle Pallets 696
20.15 Column Protection: Rack Storage and Rubber Tire Storage 704

21 Protection of High Piled Storage Using Control Mode Density Area (CMDA) Sprinklers 707

21.1 General 707
21.2 Control Mode Density/Area Sprinkler Protection Criteria for Palletized, Solid-Piled, Bin Box, Shelf, or Back-to-Back Shelf Storage of Class I Through Class IV Commodities 714
21.3 Control Mode Density/Area Sprinkler Protection Criteria for Palletized, Solid-Piled, Bin Box, Shelf, or Back-to-Back Shelf Storage of Plastic and Rubber Commodities 723
21.4 Control Mode Density/Area Sprinkler Protection Criteria for Rack Storage of Class I Through Class IV Commodities 730
21.5 Control Mode Density/Area Sprinkler Protection Criteria for Single-, Double-, and Multiple-Row Racks for Group A Plastic Commodities Stored Up to and Including 25 ft (7.6 m) in Height 739
21.6 Control Mode Density/Area Sprinkler Protection Criteria for Rack Storage Rubber Tires 744
21.7 Control Mode Density/ Area Sprinkler Protection Criteria for Roll Paper Storage 747
21.8 Special Design for Rack Storage of Class I Through Class IV Commodities and Group A Plastics Stored Up to and Including 25 ft (7.6 m) in Height 749
21.9 Sprinkler Design Criteria for Storage and Display of Class I Through Class IV Commodities, Cartoned Nonexpanded Group A Plastics and Nonexpanded Exposed Group A Plastics in Retail Stores 750
21.10 Control Mode Density/ Area Sprinkler Protection Criteria for Baled Cotton Storage 754
21.11 Control Mode Density/Area Sprinkler Protection Criteria for Carton Records Storage with Catwalk Access 755
21.12 Control Mode Density/Area Sprinkler Protection Criteria for Compact Storage of Commodities Consisting of Paper Files, Magazines, Books, and Similar Documents in Folders and Miscellaneous Supplies with No More Than 5 Percent Plastics Up to 8 ft (2.4 m) High 761

22 CMSA Requirements for Storage Applications 765

22.1 General 765
22.2 Palletized and Solid-Piled Storage of Class I Through Class IV Commodities 768

EDUFIRE.IR

22.3 Palletized and Solid-Piled Storage of Nonexpanded and Expanded Group A Plastic Commodities 768
22.4 Single-, Double-, and Multiple-Row Rack Storage for Class I Through Class IV Commodities 772
22.5 Single-, Double-, and Multiple-Row Racks of Group A Plastic Commodities 772
22.6 Rubber Tires 775
22.7 Roll Paper Storage 775

23 ESFR Requirements for Storage Applications 777

23.1 General 777
23.2 ESFR Design Criteria 779
23.3 Early Suppression Fast-Response (ESFR) Sprinklers for Palletized or Solid-Piled Storage of Class I Through Class IV Commodities 779
23.4 Early Suppression Fast-Response (ESFR) Sprinklers for Palletized or Solid-Piled Storage of Group A Plastic Commodities 779
23.5 Early Suppression Fast-Response (ESFR) Sprinklers for Rack Storage of Class I Through Class IV Commodities 781
23.6 Early Suppression Fast-Response (ESFR) Sprinklers for Rack Storage of Group A Plastic Commodities 781
23.7 Protection of Exposed Expanded Group A Plastics 789
23.8 ESFR Protection of Rack Storage of Rubber Tires 791
23.9 Early Suppression Fast-Response (ESFR) Sprinklers for Protection of Roll Paper Storage 793
23.10 Plastic Motor Vehicle Components 794
23.11 Sprinkler Design Criteria for Storage and Display of Class I Through Class IV Commodities, Cartoned Nonexpanded Group A Plastics and Nonexpanded Exposed Group A Plastics in Retail Stores 795
23.12 Protection of High Bay Records Storage 795
23.13 Slatted Shelves 798

24 Alternative Sprinkler System Designs for Chapters 20 Through 25 801

24.1 General 801
24.2 Sprinkler Design Criteria for Palletized and Solid-Piled, Storage of Class I Through Class IV and Plastic Commodities 804
24.3 Sprinkler Protection Criteria for Open-Frame Rack Storage of Class I Through Class IV and Plastic Commodities 807
24.4 Hose Stream Allowance and Water Supply Duration 812
24.5 Minimum Obstruction Criteria 813

25 Protection of Rack Storage Using In-Rack Sprinklers 817

25.1 General Requirements of In-Rack Sprinklers 817
25.2 Ceiling-Level Sprinkler Design Criteria in Combination with In-Rack Sprinklers 820
25.3 In-Rack Sprinkler Characteristics 855
25.4 Vertical Spacing and Location of In-Rack Sprinklers 856
25.5 Horizontal Location and Spacing of In-Rack Sprinklers 858
25.6 Protection of Racks with Solid Shelves 863
25.7 Horizontal Barriers in Combination with In-Rack Sprinklers 865
25.8 Alternative In-Rack Sprinkler Protection Options That Are Independent of the Ceiling Sprinkler Design 865
25.9 In-Rack Sprinkler Arrangements in Combination with CMDA Sprinklers at Ceiling Level 880
25.10 In-Rack Sprinkler Arrangements in Combination with CMSA Sprinklers at Ceiling Level 938
25.11 In-Rack Sprinkler Arrangements in Combination with ESFR Sprinklers at Ceiling Level 939
25.12 Design Criteria for In-Rack Sprinklers in Combination with Ceiling-Level Sprinklers 939

26 Special Occupancy Requirements 943

26.1 General 943
26.2 Flammable and Combustible Liquids 943
26.3 Aerosol Products 947
26.4 Spray Application Using Flammable or Combustible Materials 948
26.5 Solvent Extraction Plants. [NFPA 36] 951
26.6 Installation and Use of Stationary Combustion Engines and Gas Turbines 952

EDUFIRE.IR

26.7 Nitrate Film 952
26.8 Laboratories Using Chemicals 955
26.9 Oxygen-Fuel Gas Systems for Welding, Cutting, and Allied Processes 957
26.10 Acetylene Cylinder Charging Plants 957
26.11 Compressed Gases and Cryogenic Fluids Code 958
26.12 Utility LP-Gas Plants 958
26.13 Production, Storage, and Handling of Liquefied Natural Gas (LNG) 959
26.14 Protection of Information Technology Equipment 959
26.15 Standard on Incinerators, and Waste and Linen Handling Systems and Equipment 960
26.16 Standard for Ovens and Furnaces 965
26.17 Health Care Facilities Code, Class A Hyperbaric Chambers 965
26.18 Fixed Guideway Transit and Passenger Rail Systems 966
26.19 Motion Picture and Television Production Studio Soundstages, Approved Production Facilities, and Production Locations 967
26.20 Animal Housing Facilities 968
26.21 Water Cooling Towers 968
26.22 Standard for the Construction and Fire Protection of Marine Terminals, Piers, and Wharves 979
26.23 Semiconductor Fabrication Facilities 981
26.24 Aircraft Hangars 982
26.25 Airport Terminal Buildings, Fueling Ramp Drainage, and Loading Walkways 983
26.26 Aircraft Engine Test Facilities 983
26.27 Advanced Light Water Reactor Electric Generating Plants 984
26.28 Light Water Nuclear Power Plants 988
26.29 Code for the Protection of Cultural Resource Properties — Museums, Libraries, and Places of Worship. [NFPA 909] 988
26.30 National Electrical Code 991
26.31 Fire Protection of Telecommunication Facilities 991
26.32 Exhaust Systems for Air Conveying of Vapors, Gases, Mists, and Noncombustible Particulate Solids 991
26.33 Hypobaric Facilities 992
26.34 Coal Mines 993
26.35 Metal/Nonmetal Mining and Metal Mineral Processing Facilities 995
26.36 Hazardous Materials Code 997

27 Plans and Calculations 1003

27.1 Working Plans 1003
27.2 Hydraulic Calculation Procedures 1014
27.3 Hose Allowance 1046
27.4 Hydraulic Calculation Forms 1046
27.5 Pipe Schedules 1060

28 Systems Acceptance 1113

28.1 Approval of Sprinkler Systems and Private Fire Service Mains 1113
28.2 Acceptance Requirements 1118
28.3 Automated Inspection and Testing Devices and Equipment 1127
28.4 Instructions 1128
28.5 Hydraulic Design Information Sign (Hydraulic Data Nameplate) 1128
28.6 General Information Sign 1129

29 Existing System Modifications 1133

29.1 General 1133
29.2 Components 1135
29.3 Sprinklers 1136
29.4 Revamping of Pipe Schedule Systems 1137
29.5 Revamping of Hydraulic Design Systems 1139
29.6 System Design 1139
29.7 Testing 1141

30 Marine Systems 1143

30.1 General 1143
30.2 System Components, Hardware, and Use 1146
30.3 System Requirements 1150
30.4 Installation Requirements 1150
30.5 Design Approaches 1154
30.6 Plans and Calculations 1155
30.7 Water Supplies 1155
30.8 System Acceptance 1160
30.9 System Instructions and Maintenance 1161

31 System Inspection, Testing, and Maintenance 1163

31.1 General 1163

EDUFIRE.IR

Annexes

A Explanatory Material 1167
B Miscellaneous Topics 1169
C Explanation of Test Data and Procedures for Rack Storage 1173
D Sprinkler System Information from the 2018 Edition of the *Life Safety Code* 1175
E Development of the Design Approach to Conform with ASCE/SEI 7 and Suggested Conversion Factor Adjustments for Locations Outside the United States 1185
F Informational References 1197

Index 1205

2016–2019 Roadmap 1231

Important Notices and Legal Disclaimers 1257

EDUFIRE.IR

Preface

The first automatic fire extinguishing system on record was patented in England in 1723 and consisted of a cask of water, a chamber of gunpowder, and a system of fuses. In about 1852, the perforated pipe system represented the first form of a sprinkler system used in the United States. In 1874, Henry S. Parmelee of New Haven, Connecticut, patented the first practical automatic sprinkler.

C. J. H. Woodbury of the Boston Manufacturers Mutual Fire Insurance Company and F. E. Cabot of the Boston Board of Fire Underwriters completed a study on the performance of sprinklers for the Factory Mutual Fire Insurance Company in 1884. This study was the basis for the first set of rules for the installation of automatic sprinkler systems that were developed by John Wormald of the Mutual Fire Insurance Corporation of Manchester, England, in 1885. In 1887, similar rules were prepared in the United States by the Factory Improvement Committee of the New England Insurance Exchange.

By 1895, the commercial growth and development of sprinkler systems were so rapid that a number of different installation rules had been adopted by various insurance organizations. Within a few hundred miles of Boston, Massachusetts, nine radically different standards for the size of piping and sprinkler spacing were being used. This problem led to the creation of NFPA 13 and the formation of the National Fire Protection Association in 1896.

In many respects, the issues that led to the development of the first edition of NFPA 13 are relevant today. The unprecedented development of sprinkler system products, design techniques, and installation practices over the past several years is offering numerous options for effective system design. While this increased flexibility provides numerous advantages, it also requires more diligence by those designing, installing, and approving sprinkler systems as the rules for various system components become less uniform.

As has been the case for more than 100 years, the intent of NFPA 13 is to provide a means for analyzing sprinkler system information and presenting it in a form that will lead to effective system designs and installations. This task continues to become increasingly demanding as scientific and other discoveries generate information at an increasingly accelerated rate. In response to these challenges, in 1997 NFPA expanded the scope of NFPA 13 so that it became the most comprehensive document addressing sprinkler systems.

NFPA 13 addresses sprinkler system installations for all types of facilities regardless of the type of fire hazards present. NFPA 13 contains sprinkler system design and installation information from more than 40 NFPA codes and standards.

This handbook provides the users of NFPA 13 with background information on the work done by the technical committees during the standard development meetings. The information is intended to address why the provisions are included and how compliance can be achieved. The handbook includes commentary from contractors, designers, insurance representatives, AHJs, and subject matter experts, covering a broad spectrum of topics and industry perspective. The information in this handbook can be useful in communicating and resolving design and installation issues, leading to properly designed and installed systems. Additionally, the valuable commentary provided in this handbook helps get projects completed more efficiently and ultimately will make sure that the systems provide the level of life safety and property protection intended by the standard.

EDUFIRE.IR

EDUFIRE.IR

Acknowledgments

This revision cycle of NFPA 13 was a challenge unto itself, with the complete reorganization of the standard in addition to technical changes. The technical committees faced this challenge head on with one thought in mind — make the standard easier for users to follow and apply. Through their devotion to fire and life safety and to the NFPA process, we are able to provide the new 2019 edition of NFPA 13 reorganized in the order of how a design of a project would be approached.

The NFPA 13 technical committees consist of more than 150 people whose dedication to life safety and property protection have kept this document up to speed with the latest technology and information, which has undoubtedly saved more lives than we realize. Buoyed by a process that allows anyone and everyone a fair say in the development of the standard, we have no doubt that these committees will continue to push the envelope and save more lives and property going forward. This handbook and the commentary in it are a testament to the dedication and leadership of the committee members who selflessly work to help people they will never meet. Many of those committee members who helped develop the standard also contributed to the development of this handbook, and we would like to recognize them for their efforts: Wes Baker, Tracey Bellamy, Bob Caputo, Mark Fessenden, Mark Hopkins, Larry Keeping, Kevin Kelly, Stephan Laforest, William Smith, Victoria Valentine, and Terry Victor.

Since this handbook is not a "start-from-scratch document" but rather a fluid, living collection of technical expertise, we would be remiss if we did not thank the previous editors of the handbook who have put their own touches on it over the years: Robert Hodnett, John Bouchard, Milosh Puchovsky, Robert Solomon, Chris Dubay, Jim Lake, and Matt Klaus.

Producing this handbook has taken a tremendous amount of effort on the part of a number of people on the NFPA staff as well. Specifically, Debra Rose, product manager, and Ken Ritchie, development and production editor, whose dedication and hard work on this project have kept it moving forward through thick and thin. Also a special thanks to Nancy Wirtes, copy editor; Tracy Gaudet, permissions editor; Michela McShane and Ellen Cosgrove, proofreaders; and Cheryl Langway, art director, for their guidance and expertise throughout the project.

Dave would like to extend a special thank you to the members of the reformatting Task Group, who devised this major reorganization of the standard: Russ Leavitt (chair), Mike Friedman (deputy chair), Victoria Valentine, Pete Schwab, Tracey Bellamy, James Golinveaux, Roland Huggins, Bob Caputo, Dave Lowrey, and Adam Seghi. You have vastly improved the standard and made it a much more effective tool for the design and installation of sprinkler systems.

Last, but certainly not least, Chad would like to thank his family: Thank you to my wife, Heather, for her patience, understanding, and support while much of my time beyond the standard workday was consumed with the deadlines of this project. To my daughter and son, Ellie and Cooper, whose ecstatic excitement every time they see me brings me such joy and is a constant reminder why I do what I do for a living.

David R. Hague
Chad R.W. Duffy

EDUFIRE.IR

EDUFIRE.IR

About the Contributors

Weston C. Baker, Jr. (Chapters 20, 24, and 25)

Wes Baker is an assistant vice president and a senior engineering technical specialist in the Engineering Standards division at FM Global. He is a member of the Society of Fire Protection Engineers (SFPE) and an NFPA member serving on both the NFPA 13 Technical Committee on Sprinkler System Installation Criteria and the NFPA 13 Technical Committee on Sprinkler System Discharge Criteria. He has been with FM Global for over 32 years and is currently responsible for data sheets related to the protection of storage, as well as installation guidelines for sprinklers used for storage protection. Wes was the recipient of the 2011 William M. Carey award presented by the Fire Protection Research Foundation, an affiliate of NFPA, for his technical paper "Storage Sprinkler Design Criteria." That paper was the concept behind FM Global's recently released *Operating Standard/Property Loss Prevention Data Sheet 8-9, Storage of Class 1, 2, 3, 4 and Plastic Commodities*. Wes received an NFPA Special Achievement Award in 2015 for the contributions he provided in updating the 2016 edition of NFPA 13 regarding guidelines for commodity classification.

Tracey D. Bellamy, P.E., CFPS (Chapter 27)

Tracey Bellamy is Chief Engineering Officer with Telgian Corporation. He holds BS and MEng degrees in civil engineering from the University of South Carolina–Columbia and an advanced graduate certificate in fire protection engineering from Worcester Polytechnic Institute (WPI). Tracey has more than 30 years of experience in fire protection engineering, with a diverse range of job assignments that includes working as an authority having jurisdiction with the South Carolina State Fire Marshal, supporting facility operations and construction at a Department of Energy facility, and overseeing fire protection engineering operations for Telgian Corporation. He holds professional registration as both a fire protection engineer and a civil engineer in 49 states and the District of Columbia and is also a certified fire protection specialist. Tracey is an NFPA member and currently serves on several technical committees for multiple NFPA documents, including NFPA 13, NFPA 15 (chair), NFPA 16, NFPA 25, NFPA 30, NFPA 30B, NFPA 101, and NFPA 5000.

EDUFIRE.IR

Robert G. Caputo, CFPS, CET (Chapters 4, 5, and 6)

Bob Caputo, Vice President of Training and Technical Support at Fire & Life Safety America, is chair of the NFPA 16 Technical Committee on Foam-Water Sprinklers and a member of multiple NFPA committees, including those responsible for NFPA 13 and NFPA 25. He has been a member of several NFPA 13 committees for more than 20 years and a contributor to the 2013 and 2016 editions of the NFPA 13 handbook, the 2014 edition of the NFPA 25 handbook, and the NFPA Fire & Life Safety Inspection Manual. As a senior member of NFPA and American Fire Sprinkler Association (AFSA), Bob has written and presented seminars throughout the world on fire protection and life safety systems and is a regular speaker at the NFPA and AFSA annual conventions. He was named San Diego County Fire Prevention Officer of the Year in 1994 and was honored by the AFSA in 2017 with the Henry S. Parmelee award. Bob attended the University of Albuquerque and is a U.S. Navy veteran.

Mark Fessenden, CET (Chapters 10, 11, 12, 13, 14, and 15)

Mark Fessenden is Director of Industry Relations for Johnson Controls Inc. He has worked in fire protection equipment manufacturing for more than 20 years, with a focus on the development of new technologies, codes and standards, technical services, and training. He holds three U.S. patents in automatic sprinkler technology. Mark is certified by the National Institute for Certification in Engineering Technologies (NICET) in Automatic Sprinkler System Layout and Special Hazard Suppression Systems. As a member of the Society of Fire Protection Engineers (SFPE), the National Fire Sprinkler Association (NFSA), and the American Fire Sprinkler Association (AFSA), he is active both nationally and locally. He is a member of numerous NFPA technical committees and has been a member of the NFPA 13D and NFPA 13R Technical Committee on Residential Sprinkler Systems since 2005. Mark has a BS in Mechanical Engineering Technology from New England Institute of Technology and an MBA from Corban University.

Mark Hopkins, P.E. (Chapters 28 and 29)

Mark Hopkins is Vice President of Engineering for the National Fire Sprinkler Association (NFSA). He started his career in the early 1980s as a sprinkler fitter and worked as a sprinkler layout technician (designer), cost estimator, and contractor. He holds both a BS and an MS in Fire Protection Engineering from the University of Maryland. Mark worked as a fire protection engineer for 24 years prior to joining NFSA. He represents the fire sprinkler industry on a variety of NFPA technical committees, including NFPA 13 (Automatic Sprinkler Systems, Sprinkler System Discharge Criteria, and Hanging and Bracing of Water-Based Fire Protection Systems), NFPA 25 (Inspection, Testing, and Maintenance of Water-Based Systems), NFPA 101 and 5000 (Fundamentals), NFPA 101 and 101A (Alternative Approaches to Life Safety), NFPA 232 (Record Protection), NFPA 550 and 551 (Fire Risk Assessment Methods), and NFPA 909 and 914 (Cultural Resources). Mark also serves on the ICC Building Code Interpretations Committee (BCIC) as well as several other fire protection industry–related committees.

EDUFIRE.IR

Larry Keeping, P. Eng. (Chapter 9)

Larry Keeping has a BaSc in Mechanical Engineering from the University of Toronto and is a Professional Engineer in the province of Ontario. He has more than 44 years of experience in sprinkler system and other water-based fire protection systems design. Previously in his career, Larry worked as a designer and a design manager and for many years served as corporate engineer for a Canadian national sprinkler contractor. He has acted as a consultant on technical issues and fire protection codes and standards for engineers, architects, insurance representatives, and building/fire department officials. Larry currently serves on NFPA technical committees for NFPA 25 (Inspection, Testing, and Maintenance of Water-Based Fire Protection Systems), NFPA 13 (Sprinkler System Installation Criteria and Sprinkler System Discharge Criteria), and NFPA 24 (Private Water Supply Piping Systems).

Kevin J. Kelly, P.E. (Chapter 16)

Kevin Kelly is a Codes and Standards Specialist for Victaulic. Previously, he was a fire protection engineer consultant for the National Fire Sprinkler Association (NFSA). Kevin graduated from the University of Maryland with a BS in Fire Protection Engineering and is a licensed Professional Engineer. He has taught technical seminars on topics related to fire protection and serves on several NFPA technical committees, including NFPA 13 and NFPA 24. Kevin participates in the International Code Council's model code development process and is a past chair of the Fire Protection Committee for the American Water Works Association (AWWA).

Stephan L. Laforest, CET (Selected Artwork)

Stephan Laforest is the president of Summit Sprinkler Design Services, Inc., of Milton, Vermont. He has been involved in fire sprinkler system contracting since 1997, after graduating from the Fire Protection Engineering Technology Program at Seneca College in Toronto, Ontario. Stephan has experience in design, estimating, and project management. His past projects include residential high-rise towers, casinos, large storage and warehouse facilities, custom homes, apartment complexes, and retail occupancies.

William B. Smith, P.E., P. Eng (Chapters 21, 22, and 23)

Will Smith is Principal of the Fire Protection Systems Design Group for Code Consultants, Inc. (CCI) and has been actively involved in the fire protection industry for 28 years. He holds a BS in Mechanical Engineering and is registered as a Professional Engineer – Fire Protection in 40 U.S. states, the District of Columbia, Puerto Rico, and five Canadian provinces. Will is a member of the NFPA 13 Technical Committees on Sprinkler System Installation Criteria and Sprinkler System Discharge Criteria and an active member of the Society of Fire Protection Engineers (SFPE). As Principal of the Fire Protection Systems Design Group at CCI, he is responsible for all facets of project management, client relations, contract administrations, and quality control. Will's expertise is in fire protection systems design, high-piled storage, flammable and combustible liquids and hazardous materials. He has provided fire protection systems design services in the United States, Canada, and overseas for thousands of projects, including hotels, apartment complexes, condominiums, corporate offices, distribution centers, and retail and mixed-use developments.

EDUFIRE.IR

Victoria B. Valentine, P.E. (Chapters 17 and 18)

Victoria Valentine is Director of Professional Qualifications and Industry Alliances for the Society of Fire Protection Engineers (SFPE). She holds a BS in Civil Engineering and an MS in Fire Protection Engineering, both from Worcester Polytechnic Institute (WPI). Victoria is a licensed professional engineer with expertise in fire sprinkler systems and earthquake protection for mechanical systems. In addition, she has worked in nonprofit associations for more than a decade with a focus on codes and standards development and training programs to ensure quality in fire protection systems. Throughout her professional career, she has authored several publications and presented on fire protection systems to many audiences. Victoria continues to be involved with several organizations, including the American Society of Civil Engineers (ASCE) and the National Fire Sprinkler Association (NFSA), in addition to NFPA.

Terry Victor, CET (Chapters 7 and 8)

Terry Victor, Senior Manager of Industry Relations at JCI/Grinnell Fire Protection Solutions, has over 45 years of technical experience in the fire sprinkler industry. He is NICET (National Institute for Certification in Engineering Technologies) certified Level IV in Water-Based Systems Layout and Special Hazards Systems Layout. Terry serves on various industry boards and committees and is a member of the Congressional Fire Services Institute (CFSI) National Advisory Committee and the Automatic Fire Alarm Association (AFAA) Codes and Standards Committee. He is JCI/Grinnell's representative on the National Fire Sprinkler Association (NFSA) Board of Directors, the past chair of the NFSA Engineering & Standards Committee, and the current chair of the NFSA ITM Committee. Terry is the JCI Regional Coordinator for Codes and Standards in the United States and current chair of the Capital Region Fire Sprinkler Association. He is also a member of numerous NFPA technical committees, including those for NFPA 3, NFPA 4, NFPA 13, NFPA 13D, NFPA 13R, NFPA 14, NFPA 15, NFPA 16, NFPA 20, NFPA 25, NFPA 72, NFPA 101, NFPA 214, NFPA 303, and NFPA 5000, and a member of the Correlating Committee on Building Codes. Terry received the NFPA Committee Service Award in 2015 and the NFSA Russell P. Fleming Technical Service Award in 2017.

EDUFIRE.IR

About the Editors

David R. Hague, P.E., CFPS, CET

David Hague is Staff Liaison for the NFPA sprinkler standards, which include NFPA 13, NFPA 13D, NFPA 13R, NFPA 24, and NFPA 291, and the NFPA foam system documents, which include NFPA 11 and NFPA 16. He began his career designing fire protection systems, including sprinkler, standpipe, water spray, fire pump, and foam systems, for the Automatic Sprinkler Corporation of America and has a total of 17 years' experience in contracting. Dave has spent 16 years with NFPA and 7 years in the insurance business as Manager of the Engineering Technical Unit of Liberty Mutual Property Insurance. He has served as technical editor and contributing author of several books, including *Fire Protection Systems for Special Hazards*, the NFPA 20 and NFPA 25 handbooks, *Fire Protection Handbook*, and *Handbook on Commissioning of Fire Protection Systems*. Dave is a registered Professional Engineer in the state of Massachusetts, a Certified Fire Protection Specialist (CFPS), and NICET (National Institute for Certification in Engineering Technologies) certified in Sprinkler and Special Hazards Systems.

Chad R.W. Duffy, P.E., CFPS, CET

Chad Duffy is a senior fire protection engineer at NFPA, where he is a team member of the Building Fire Protection and Life Safety group. He is responsible for NFPA documents that address automatic sprinkler systems and inspection, testing, and maintenance of water-based suppression systems. Chad is a graduate of Seneca College, with a degree in Fire Protection Engineering Technology, and a registered Professional Engineer in the state of Massachusetts. He is also NICET (National Institute for Certification in Engineering Technologies) certified in Water-Based Layout and a Certified Fire Protection Specialist (CFPS). Chad has extensive experience in water-based suppression systems as a project manager, designer, and estimator for projects throughout the United States and Macau. His project work includes the use of various design software programs for the layout of sprinkler, fire pump, and standpipe systems in high-rise buildings, storage facilities, shopping malls, rail stations, and casinos. Prior to joining NFPA in 2011, Chad owned and operated a sprinkler design and consulting firm and a sprinkler installation-contracting company.

EDUFIRE.IR

EDUFIRE.IR

CHAPTER

1

Administration

REORGANIZATION NOTE

At the first draft meeting for the 2016 edition of NFPA 13, in December 2013, the Correlating Committee for NFPA 13 instructed all Sprinkler Technical Committees to begin developing a plan to streamline the standard to make it easier to follow. The Correlating Committee noted that redundancies throughout the standard had increased the length of the document without adding clarification of the requirements. A Reformatting Task Group was formed, which resulted in a completely reformatted standard for the 2019 edition of NFPA 13 that now follows the logic behind the design of a sprinkler system.

Chapter 1 has remained largely as it was in the 2016 edition, with one exception: Section 4.1, Level of Protection, in previous editions has been moved into Section 1.3, Application, to provide an understanding of where protection must be provided.

SEE ALSO

The 2016-2019 Roadmap at the end of the book, which cross-references section numbers from the 2016 edition with those of the 2019 edition.

Chapter 1 of NFPA 13 provides administrative requirements for installing sprinkler systems, offers guidance on the application of the standard, and explains how units are expressed throughout the document. The chapter consists of seven subject areas: scope, purpose, application, retroactivity, equivalency, units and symbols, and new technology. Each section provides the user with the foundational assumptions, principles, and information for the proper use and application of the requirements within this standard.

1.1* Scope.

A.1.1 This standard provides a range of sprinkler system approaches, design development alternatives, and component options that are all acceptable. Building owners and their designated representatives are advised to carefully evaluate proposed selections for appropriateness and preference.

1.1.1 This standard shall provide the minimum requirements for the design and installation of automatic fire sprinkler systems and exposure protection sprinkler systems covered within this standard.

The scope of NFPA 13 states that the standard includes the minimum requirements for design and installation of sprinkler systems employing automatic or open sprinklers that discharge water to suppress or control a fire. The phrase "minimum requirements" does not mean that the criteria are marginally acceptable, but rather it defines what is required for a reasonable level of protection.

ASK THE AHJ

Why are some fire protection concepts not required by NFPA 13 even though they would be helpful for responding personnel? Examples include smaller area zone control valves and fire department connections sized such that the full system demand can be supplied through the fire department connection.

The scope and the purpose of this standard are to provide the minimum requirements to achieve a reasonable level of protection. As more features are required of the fire sprinkler system, the system becomes

EDUFIRE.IR

more complex and generally the cost of the system increases. Therefore, not all features are included in the requirements because they provide a baseline coverage that goes beyond the minimum requirements. For example, although fire sprinkler system failures are rare, the most likely reason for failure is a shut control valve. Instead of referencing NFPA 25, *Standard for the Inspection, Testing, and Maintenance of Water-Based Fire Protection Systems,* for future maintenance requirements, the standard could hypothetically require the owner to have a fire watch in the valve room 365 days a year, 24 hours a day, to ensure that no one shuts the valve when it is not supposed to be shut. Therefore, NFPA 13 allows for the sealing of the valve in a secure area, along with periodic checks under the requirements of NFPA 25, to help prevent the shutting of a control valve. If owners or tenants want a higher degree of protection, there is nothing prohibiting them from doing so. However, the authority having jurisdiction should not impose requirements beyond those specified in NFPA 13 unless those requirements have been formally adopted in the jurisdiction.

1.1.2* This standard shall not provide requirements for the design or installation of water mist fire protection systems.

The definition of *sprinkler system* in 3.3.206 could be misconstrued to include a water mist system. Subsection 1.1.2 clarifies that NFPA 13 does not address other water-based systems, such as a water mist system installed in accordance with NFPA 750, *Standard on Water Mist Fire Protection Systems*.

ASK THE AHJ

There have been a lot of demonstrations to authorities having jurisdiction in recent years claiming that water mist systems are a viable fire protection system. Is 1.1.2 indicating that water mist is an unacceptable technology to protect life and property in the occupancies addressed in NFPA 13?

Paragraph 1.1.2 is not stating that water mist is an unacceptable technology. It is simply indicating that water mist systems are entirely different type from fire sprinkler systems and that design and installation requirements for water mist systems are located in NFPA 750 rather than NFPA 13.

N **A.1.1.2** Various codes and standards allow exceptions and reductions in building fire protection and other construction features where fire sprinkler systems are installed in accordance with NFPA standards. Only after appropriate analysis and evaluation of a tested mist system has been performed for the intended installation, and taking into consideration criteria other than solely fire-fighting performance (visibility, pressure ratings of backup systems, etc.) should exceptions and reductions in building fire protection and other construction features be allowed by the authority having jurisdiction. These systems are adequately described in NFPA 750.

N **1.1.2.1** Water mist fire protection systems shall not be considered fire sprinkler systems.

N **1.1.2.2** The design and installation of water mist fire protection systems shall comply with NFPA 750.

1.1.3* This standard is written with the assumption that the sprinkler system shall be designed to protect against a single fire originating within the building.

In recent years, there have been incidents where fires have started on or near the building exterior that have impacted the building, including fires started by discarded smoking materials in landscaped areas or fires originating at exterior utility equipment. NFPA 13 does not require an exterior exposure protection system to address those types of fires.

A.1.1.3 This standard also provides guidance for the installation of systems for exterior protection and specific hazards. Where these systems are installed, they are also designed for protection of a fire from a single ignition source.

Prior to the 2010 edition, this standard was silent on the issue of multiple ignition sources because a single ignition scenario was assumed but not stated. The lack of such a statement led to increasing discussion and

EDUFIRE.IR

varying interpretation of the standard with regard to multiple ignition sources. One side of the discussion maintains that multiple ignition source fires, if not accounted for in the system design, could overwhelm the sprinkler system water supply. However, adding such a statement within the standard would still leave unresolved the determination of how many ignition sources should be considered and their appropriate location within the building. Attempting to resolve such wide-ranging variables would result in an overdesign of the system at considerable expense, with little technical justification.

1.2* Purpose.

A.1.2 Since its inception, this document has been developed on the basis of standardized materials, devices, and design practices. However, Sections 1.2 and 15.2 allow the use of materials and devices not specifically designated by this standard, provided such use is within parameters established by a listing organization. In using such materials or devices, it is important that all conditions, requirements, and limitations of the listing be fully understood and accepted and that the installation be in complete accord with such listing requirements.

1.2.1 The purpose of this standard shall be to provide a reasonable degree of protection for life and property from fire through standardization of design, installation, and testing requirements for sprinkler systems, including private fire service mains, based on sound engineering principles, test data, and field experience.

All NFPA codes and standards are required to contain a document purpose section that describes the goal of the document. The document purpose also describes the objective(s) of the document or what it was created to accomplish.

The purpose of NFPA 13 is to provide a reasonable degree of protection for life and property from fire. However, as with most life safety systems, the overall level of protection to life and property provided by sprinkler systems is difficult to precisely quantify. For example, an accurate mathematical prediction that everyone exposed to a rapidly spreading flammable liquids fire in a fully sprinklered processing plant would escape without harm or that property damage could be limited to a specific dollar value or to a percentage of the overall building area cannot be made. However, both life safety and property protection in buildings are known to be greatly enhanced by the presence of an automatic sprinkler system that complies with NFPA 13. Detailed fire data collected and analyzed by NFPA's Fire Analysis and Research Division can be accessed at www.nfpa.org/News-and-Research.

1.2.2 Sprinkler systems and private fire service mains are specialized fire protection systems and shall require design and installation by knowledgeable and experienced personnel.

The requirements of NFPA 13 were developed through the application of engineering principles, fire test data, and field experience. During the standard's history of more than 100 years, the technical committees on automatic sprinkler systems have reviewed, analyzed, and evaluated sprinkler system–related information and presented it in a useful form. As with any specialized subject, a good understanding of the basic principles and a continued effort to keep current with developing technologies are essential. NFPA 13 is a design and installation standard, not a how-to manual or a textbook.

ASK THE AHJ

Who is allowed to design and/or install fire sprinkler systems?

The local licensing laws typically specify who is allowed to design and/or install fire sprinkler systems. These rules vary drastically from jurisdiction to jurisdiction. As a standard, NFPA 13 does not establish professional qualification requirements. Contrary to popular belief, the proper design and installation of fire sprinkler systems is far more specialized than simply getting water on the fire.

EDUFIRE.IR

1.3 Application.

1.3.1 This standard shall apply to the following:

(1) Character and adequacy of water supplies
(2) Sprinklers
(3) Fittings
(4) Piping
(5) Valves
(6) All materials and accessories, including the installation of private fire service mains

N **1.3.2 Level of Protection.** A building, where protected by an automatic sprinkler system installation, shall be provided with sprinklers in all areas except where specific sections of this standard permit the omission of sprinklers.

1.3.3 This standard shall also apply to "combined service mains" used to carry water for both fire service and other uses as well as to mains for fire service use only.

Most NFPA codes and standards contain an application section that indicates how and to what the requirements of the document shall apply. NFPA 13 is applicable not only to sprinkler systems but also to any combined service mains that are used to supply both sprinkler and domestic demands. For combined service mains, ensuring that the water supply will be adequate to meet the required sprinkler system demand when called upon is essential.

1.4 Retroactivity.

The provisions of this standard reflect a consensus of what is necessary to provide an acceptable degree of protection from the hazards addressed in this standard at the time the standard was issued.

1.4.1 Unless otherwise specified, the provisions of this standard shall not apply to facilities, equipment, structures, or installations that existed or were approved for construction or installation prior to the effective date of the standard. Where specified, the provisions of this standard shall be retroactive.

1.4.2 In those cases where the authority having jurisdiction determines that the existing situation presents an unacceptable degree of risk, the authority having jurisdiction shall be permitted to apply retroactively any portions of this standard deemed appropriate.

A retroactivity clause appears in many NFPA codes and standards. Its main purpose in NFPA 13 is to reinforce the premise that any sprinkler system installed in accordance with the applicable edition of NFPA 13 at the time of construction is considered to be in compliance with the standard for the system's lifetime, as long as no system modifications are made, the building is not significantly modified or updated, and the fire hazard presented by the occupancy or operational use remains unchanged.

In other words, an existing system is not required to be reviewed for compliance with every new edition of the standard. For example, the 2010 edition of NFPA 13 truncated the sprinkler system design curves in the storage chapters to 3000 ft^2 (279 m^2). This requirement is not intended to apply retroactively to a system that was installed in accordance with previous editions of the standard where design curves extended beyond 3000 ft^2 (279 m^2). Omission of this retroactivity clause would require building owners, code enforcers, insurance companies, and installers to undertake the never-ending task of updating and revising their sprinkler systems every time a new edition of NFPA 13 is published.

Routine inspections and testing of a sprinkler system in accordance with NFPA 25 uncover many deficiencies and impairments. Deficiencies, such as lightly painted sprinklers and nonoperational or malfunctioning waterflow devices, can lead to a reduced performance of the sprinkler system. Impairments, such

EDUFIRE.IR

as closed valves, obstructed sprinklers, and system leaks, can lead to unsuccessful sprinkler system performance. Proper knowledge by those designing and installing the system, as well as a vigilant maintenance program, is critical in ensuring that sprinkler systems remain one of the most reliable and effective means for protecting life and property against fire.

ASK THE AHJ

Many authorities having jurisdiction purchase the latest NFPA code sets and stay on top of the latest changes. Should they be using the latest edition of NFPA 13 as they inspect existing facilities?

No. First, the jurisdiction would need to formally adopt the latest edition of the standard in order for it to be enforceable. Second, Section 1.4 explains that the publishing of a new edition of the standard does not require all of the existing systems to meet the new edition. Existing installations are generally deemed to be in compliance with the standard with which it was installed to meet. If there is a question of compliance for an existing system, the edition of NFPA 13 that applied when the system was installed should be utilized. However, the latest edition of NFPA 13 does provide the point of last consensus of the NFPA technical committees, which can be valuable in addressing matters not provided for in past editions or requirements made based on new testing data.

1.4.3 The retroactive requirements of this standard shall be permitted to be modified if their application clearly would be impractical in the judgment of the authority having jurisdiction, and only where it is clearly evident that a reasonable degree of safety is provided.

1.5 Equivalency.

Nothing in this standard is intended to prevent the use of systems, methods, or devices of equivalent or superior quality, strength, fire resistance, effectiveness, durability, and safety over those prescribed by this standard.

Section 1.5 provides the user with an option to submit documentation that the proposed alternative or equivalent method of protection meets the equivalent method of design. There are no blueprints on how to submit an equivalency statement; however, it is generally best to start with solid data. Knowledge of the history of current protection criteria is always a plus in making the case for equivalency. The following are some of the documents (not all are required) to submit when making a case for equivalency:

1. A statement of why (if known) the proposed method is not currently in the standard
2. Test data and a report, preferably from a recognized laboratory
3. Historical data on limitations of or assumptions regarding existing criteria in the standard
4. A report on why the proposal provides equivalent or superior protection to that prescribed in the current standard
5. Special listings or approvals from recognized laboratories
6. Data or supporting documentation from a manufacturer

The authority having jurisdiction has the right of approval for all equivalent methods. It is advisable for authorities having jurisdiction to reach out to industry experts for opinions and support on equivalency proposals outside their level of expertise.

1.5.1 Technical documentation shall be submitted to the authority having jurisdiction to demonstrate equivalency.

1.5.2 The system, method, or device shall be approved for the intended purpose by the authority having jurisdiction.

An equivalency statement is included in many NFPA documents to allow for products and system arrangements that are not specifically covered by the standard to be used. However, the products or arrangements must demonstrate that they do not lower the level of safety provided by the standard or alter the standard's intent.

EDUFIRE.IR

DESIGNER'S CORNER [1.5]

When a sprinkler contractor provides a unique or creative solution to a problem, the authority having jurisdiction sometimes asks, "Where does it say you can do that in NFPA 13?" Is this a valid approach?

This approach to address compliance issues within the standard is not realistic and is not consistent with how the standard is written. NFPA 13 cannot list every conceivable arrangement of equipment that is acceptable. Instead, NFPA 13 is written to describe what is not allowed. If there is no section in NFPA 13 that prohibits a specific installation or practice, it does not mean that the practice is not acceptable or is unsafe in some way.

For example, because there are concerns over water getting trapped in dry pipe systems where certain types of sprinklers are used on the branch lines, 8.2.2 limits the type of sprinklers that can be used in dry pipe systems. But there is no similar concern with wet pipe systems, so Section 8.1 is silent on what type of sprinkler can be used in wet pipe systems. If a sprinkler contractor were to propose using upright sprinklers on a wet pipe system and the authority having jurisdiction were to ask, "Where does it say that you can do that in NFPA 13?," the answer would be that it does not say that anywhere. Yet it is unquestionable that upright sprinklers can be used on wet pipe systems and that their use is supported by the manufacturer's listing.

1.6 Units and Symbols.

1.6.1 Units.

1.6.1.1 Metric units of measurement in this standard shall be in accordance with the modernized metric system known as the International System of Units (SI).

1.6.1.2 Two units (liter and bar), outside of but recognized by SI, are commonly used in international fire protection.

1.6.1.3 These units with conversion factors shall be used as listed in Table 1.6.1.3.

TABLE 1.6.1.3 *Conversion Factors*

Name of Unit	*Unit Symbol*	*Conversion Factor*
liter	L	1 gal = 3.785 L
millimeter per minute	mm/min	1 gpm/ft^2 = 40.746 mm/min = 40.746 (L/min)/m^2
cubic decimeter	dm^3	1 gal = 3.785 dm^3
pascal	Pa	1 psi = 6894.757 Pa
bar	bar	1 psi = 0.0689 bar
bar	bar	1 bar = 10^5 Pa

Note: For additional conversions and information, see ASTM SI10, *Standard for Use of the International System of Units (SI): The Modern Metric System.*

A more representative list of common conversions found in NFPA 13 is shown in Commentary Table 1.1.

NFPA 13 has historically used an exact conversion process. During the development of the 2016 edition, a Metric Task Group was formed to study the use of approximate conversions to make the standard more usable in locations employing the metric system.

Because most of the values in NFPA 13 are not intended as precise values, "hard" (exact) conversions imply a greater degree of accuracy than was originally intended. For example, 40,000 ft^2 converts to 3716.12 m^2. In reviewing this conversion, the Metric Task Group felt that a soft conversion of 3720 m^2 is more consistent with the original intent of the committee and more consistent with the structure of the metric system where fractions of a meter are not appropriate.

Another example is trade sizes for pipe. Pipe in the metric system is manufactured to the sizes illustrated in Commentary Table 1.2.

EDUFIRE.IR

COMMENTARY TABLE 1.1 *Common Conversions*

	Name of Unit	Unit Symbol	Conversion Factor
Length	millimeter	mm	1 in. = 25 mm
	meter	m	1 ft = 0.3048 m
Area	square millimeter	mm^2	1 $in.^2$ = 645.2 mm^2
	square meter	m^2	1 ft^2 = 0.0929 m^2
Volume	cubic meter	m^3	1 ft^3 = 0.02832 m^3
Fluid capacity	liter	L	1 fl oz = 0.02957 L
	liter	L	1 gal = 3.785 L
Flow	liter per minute	L/min	1 gpm = 3.7848 L/min
Pressure	bar	bar	1 psi = 0.0689 bar
Discharge density	millimeter per minute	mm/min	1 gpm/ft^2 = 40.746 mm/min
	liter per minute square meter	(L/min)/m^2	1 gpm/ft^2 = 40.746 (L/min)/m^2
K-factor	K-factor	L/min/$(bar)^2$	1 gpm/$(psi)^2$ = 14.285 L/min/$(bar)^2$
Weight	kilogram	kg	1 lb = 0.4536 kg
Density	kilogram per cubic meter	kg/m^3	1 lb/ft^3 = 16.02 kg/m^3
Temperature	degree Fahrenheit	°F	F° = 9/5 x °C + 32
	degree Celsius	°C	°C = 5/9(°F – 32)
Velocity	kilometer per hour	km/h	1 mph = 1.609 km/h
Pound force	newton	N	1 lb force = 4.44822 N
Gauge (sheet steel)	millimeter	mm	12 gauge = 2.8 mm
			14 gauge = 1.98 mm
			16 gauge = 1.57 mm
			22 gauge = 0.78 mm
			24 gauge = 0.63 mm

COMMENTARY TABLE 1.2 *Metric Trade Sizes for Pipe*

in.	mm	in.	mm	in.	mm
1/8	3	2	50	10	250
1/4	6	2½	65	12	300
3/8	10	3	80	14	350
1/2	15	3½	90	16	400
3/4	20	4	100	18	450
1	25	5	125	20	500
1¼	32	6	150	24	600
1½	40	8	200		

Throughout the standard, trade sizes for pipe should not be confused with hard or soft conversions for specific dimensions. For example, a 3 in. dimension should be illustrated as 75 mm where 3 in. pipe would be illustrated as 80 mm.

Approximate conversions are most noticeable in the inch-millimeter conversions. The Metric Task Group elected to follow a policy of 1 in. = 25 mm. Dimensions shown in inches are converted to millimeters and dimensions shown in feet or in feet and inches are converted to meters.

In general, three-digit conversions have been rounded to the nearest 0 or 5 as the final digit, and four digit numbers have been rounded to the nearest 50 or 00 for the two final digits. There are, however, many exceptions to this guideline due to the type of unit being used. As mentioned previously, 40,000 ft^2 has been converted to 3720 m^2 rather than the soft value of 3700 m^2.

A list of conversions found in NFPA 13 is provided in Exhibit 1.3, located at the end of this chapter.

SEE ALSO

Exhibit 1.3 at the end of the chapter for a complete list of conversions found in NFPA 13.

1.6.1.4* If a value for measurement as given in this standard is followed by an equivalent value in other units, the first stated shall be regarded as the requirement.

N **A.1.6.1.4** Where both units of measure are presented (SI and Imperial), users of this standard should apply one set of units consistently and should not alternate between units.

EDUFIRE.IR

1.6.2 Hydraulic Symbols.

The standard abbreviations in Table 1.6.2 shall be used on the hydraulic calculation form discussed in Chapter 23.

TABLE 1.6.2 *Hydraulic Symbols*

Symbol or Abbreviation	*Item*
p	Pressure in psi
gpm	U.S. gallons per minute
q	Flow increment in gpm to be added at a specific location
Q	Summation of flow in gpm at a specific location
P_t	Total pressure in psi at a point in a pipe
P_f	Pressure loss due to friction between points indicated in location column
P_e	Pressure due to elevation difference between indicated points. This can be a plus value or a minus value. If minus, the (–) shall be used; if plus, no sign is needed.
P_v	Velocity pressure in psi at a point in a pipe
P_n	Normal pressure in psi at a point in a pipe
E	90-degree ell
EE	45-degree ell
Lt.E	Long-turn elbow
Cr	Cross
T	Tee-flow turned 90 degrees
GV	Gate valve
BV	Butterfly (wafer) check valve
Del V	Deluge valve
ALV	Alarm valve
DPV	Dry pipe valve
CV	Swing check valve
WCV	Butterfly (wafer) check valve
St	Strainer
psi	Pounds per square inch
v	Velocity of water in pipe in feet per second
K	K-factor
C-factor	Friction loss coefficient

1.6.3* Some dimensions used in this standard are exact and some are not. Nominal dimension are often used, such as the dimensions used for pipe sizes. The metric equivalent shown in this standard might not be an exact conversion to the SI unit, but the nominal metric equivalent is typically used or a reasonably equivalent value or approximate conversion is used. It shall be acceptable to use the exact conversion or the conversions stated in the standard, even though they might not be exact.

A.1.6.3 Some dimensions used in this standard require a tight precision and others do not. For example, when performing hydraulic calculations more precision is required than when specifying a nominal dimension. An example is pipe sizes, where we typically refer to a nominal diameter rather than the exact diameter. The metric equivalents also have a set of generally accepted nominal measurements, and they are not a precise conversion from the "English Unit" nominal dimension. Throughout the standard the generally accepted nominal pipe sizes have been used. For example 1 in. pipe = 25 mm, 1¼ in. pipe = 32 mm, 1½ in. pipe = 40 mm, and so forth. In other cases, rounding is used and the number of significant digits taken into account. For example, a 30 ft ceiling would be 9.144 m. This implies a level of precision that is higher than used for the original dimension, and a conversion to

EDUFIRE.IR

9.1 m or even 9 m is more appropriate. Another example is that in the standard, 1 in. has been converted to 25 mm and not 25.4 mm, 2 in. to 50 mm, 6 in. to 150 mm, and so forth. Finally, locally available material can have different characteristics in countries that use metric units than are typically found in the United States. Examples are things like standard door or window sizes, rack dimensions, and so forth. In these cases an approximate conversion can also be used. Where approximate conversions have been used, it is acceptable for a designer or installer to use an exact conversion rather than the approximate conversion used in the standard.

FAQ [1.7.2]

When using a specially listed product, are the only installation requirements those contained within NFPA 13?

The requirement in 1.7.2 alerts the NFPA 13 user that specialized products often have specific requirements or limitations that are not addressed by NFPA 13. For all listed products, the listing information and the relevant manufacturer's literature must be applied.

1.7 New Technology.

The scientific study of fire, sprinklers, and their interaction is a dynamic field. Research and testing continue even after the standard has been published and can result in the introduction of a new product or technology that is not addressed in the current edition of the standard. The new technology section of this standard facilitates the development of better system performance and more effective new products by allowing for their use with proper documentation. For example, residential sprinklers were developed to protect people in the room of fire origin within a dwelling unit who are not intimate with ignition, provided the fire load is typical of that found in a residential-type occupancy. More information on residential sprinklers is provided in NFPA 13D, *Standard for the Installation of Sprinkler Systems in One- and Two-Family Dwellings and Manufactured Homes*.

1.7.1 Nothing in this standard shall be intended to restrict new technologies or alternate arrangements, provided the level of safety prescribed by this standard is not lowered.

1.7.2 Materials or devices not specifically designated by this standard shall be utilized in complete accord with all conditions, requirements, and limitations of their listings.

NFPA 13 encourages innovative and economically feasible measures that provide life safety and property protection. Specifically, 1.7.2 allows the use of increasingly available specially listed materials and products and promotes the continued development of new sprinkler-related technologies. Examples of recently developed specially listed products are shown in Exhibit 1.1 and Exhibit 1.2. The style V9 Installation-Ready™ one-bolt innovative groove system (IGS) sprinkler coupling is designed to connect IGS grooved sprinklers to matching IGS outlets. It is designed to allow no obstruction or change to distribution pattern when installed in any orientation (upright/pendent or alignment with frame arms). The integral design of the sprinkler provides a backstop to allow the sprinkler to position within the groove.

EXHIBIT 1.1 *K17 Sprinkler. (Courtesy of Victaulic)*

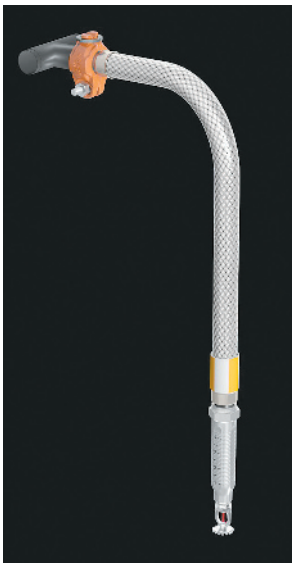

EXHIBIT 1.2 *VS-1 Flexible Dry Sprinkler. (Courtesy of Victaulic)*

References Cited in Commentary

National Fire Protection Association, 1 Batterymarch Park, Quincy, MA 02169-7471.

NFPA 13D, *Standard for the Installation of Sprinkler Systems in One- and Two-Family Dwellings and Manufactured Homes,* 2019 edition.

NFPA 25, *Standard for the Inspection, Testing, and Maintenance of Water-Based Fire Protection Systems,* 2017 edition.

NFPA *101®*, *Life Safety Code®*, 2018 edition.

NFPA 750, *Standard on Water Mist Fire Protection Systems,* 2019 edition.

NFPA 5000®, *Building Construction and Safety Code®*, 2018 edition.

International Code Council, 500 New Jersey Avenue, NW, 6th Floor, Washington, DC 20001.

International Building Code®, 2018 edition.

EDUFIRE.IR

Length (inches/millimeters)									
.003 in.	.08 mm	2 in.	50 mm	11 in.	275 mm	22.5 in.	565 mm	40 in.	1000 mm
.0315 in.	.8 mm	2.5 in.	65 mm	11.5 in.	290 mm	23 in.	575 mm	42 in.	1050 mm
1/32 in.	0.8 mm	2.75 in.	70 mm	12 in.	300 mm	24 in.	600 mm	44 in.	1100 mm
1/16 in.	1.6 mm	3 in.	75 mm	12.25 in.	305 mm	25 in.	625 mm	47 in.	1175 mm
3/32 in.	2 mm	3.5 in.	90 mm	12.5 in.	315 mm	25.5 in.	640 mm	48 in.	1200 mm
1/8 in.	3 mm	4 in.	100 mm	12.75 in.	320 mm	26 in.	650 mm	54 in.	1350 mm
3/16 in.	5 mm	4.5 in.	115 mm	14 in.	350 mm	27.6 in.	690 mm	55 in.	1375 mm
1/4 in.	6 mm	5 in.	125 mm	15 in.	375 mm	28 in.	700 mm	57 in.	1425 mm
5/16 in.	8 mm	5.5 in.	140 mm	15.5 in.	390 mm	29 in.	725 mm	58 in.	1450 mm
3/8 in.	10 mm	5.75 in.	145 mm	16 in.	400 mm	30 in.	750 mm	66 in.	1650 mm
1/2 in.	13 mm	6 in.	150 mm	16.25 in.	410 mm	30.5 in.	765 mm	68 in.	1700 mm
17/32 in.	13 mm	7 in.	175 mm	16.5 in.	415 mm	31 in.	775 mm	72 in.	1800 mm
9/16 in.	14 mm	7.5 in.	190 mm	17 in.	425 mm	32 in.	800 mm	76 in.	1900 mm
5/8 in.	16 mm	8 in.	200 mm	17.5 in.	440 mm	33 in.	825 mm	78 in.	1950 mm
3/4 in.	19 mm	8.5 in.	215 mm	18 in.	450 mm	35 in.	875 mm	96 in.	2400 mm
7/8 in.	22 mm	9 in.	225 mm	19 in.	475 mm	35.4 in.	885 mm	102 in.	2550 mm
1 in.	25 mm	9.25 in.	230 mm	20 in.	500 mm	36 in.	900 mm	120 in.	3000 mm
1.5 in.	40 mm	9.5 in.	240 mm	21 in.	525 mm	37 in.	925 mm	148 in.	3700 mm
1.75 in.	45 mm	10 in.	250 mm	22 in.	550 mm	38 in.	950 mm		

Length (feet/meters)									
3.5 ft	1.1 m	7 ft 7 in.	2.3 m	12 ft	3.7 m	20 ft	6.1 m	36 ft	11 m
3 ft 8 in.	1.1 m	7 ft 9 in.	2.4 m	12 ft 4 in.	3.8 m	20 ft 8 in.	6.3 m	40 ft	12 m
4 ft	1.2 m	8 ft	2.4 m	13 ft	4.0 m	21 ft 6 in.	6.6 m	41 ft 3 in.	13 m
4 ft 2 in.	1.3 m	8 ft 2 in.	2.5 m	13 ft 6 in.	4.1 m	21 ft 10 in.	6.7 m	45 ft	14 m
4.5 ft	1.4 m	8 ft 4 in.	2.5 m	13 ft 7 1/2 in.	4.2 m	22 ft	6.7 m	50 ft	15 m
4 ft 7in.	1.4 m	8 ft 7 7/8 in.	2.6 m	13 ft 11 in.	4.2 m	22 ft 6 in.	6.9 m	51 ft 6 in.	16 m
4 ft 9 in.	1.4 m	9 ft	2.7 m	14 ft	4.3 m	24 ft	7.3 m	55 ft	17 m
5 ft	1.5 m	9 ft 5 in.	2.9 m	14 ft 6 in.	4.4 m	25 ft	7.6 m	60 ft	18 m
5 ft 2 in.	1.6 m	9 ft 6 in.	2.9 m	15 ft	4.6 m	25 ft 3 in.	7.7 m	65 ft	20 m
5.5 ft	1.7 m	10 ft	3 m	15 ft 4 in.	4.7 m	26 ft	7.9 m	70 ft	21 m
5 ft 8 in.	1.7 m	10.5 ft	3.2 m	16 ft	4.9 m	27 ft	8.2 m	75 ft	23 m
5 ft 9 5/16 in.	1.8 m	10 ft 9 in.	3.3 m	16 ft 6 in.	5.0 m	28 ft	8.5 m	76 ft	23 m
6 ft	1.8 m	10 ft 10 in.	3.3 m	16 ft 8 in.	5.1 m	28 ft 8 in.	8.7 m	80 ft	24 m
6 ft 3 in.	1.9 m	11 ft 0 in.	3.4 m	17 ft	5.2 m	29 ft 8 in.	9 m	100 ft	30 m
6 ft 4 in.	1.9 m	11 ft 3 in.	3.4 m	18 ft	5.5 m	30 ft	9.1 m	200 ft	61 m
6.5 ft	2 m	11 ft 5 in.	3.5 m	16 ft 6 in.	5.6 m	32 ft	10 m	250 ft	76 m
6 ft 10 in.	2.1 m	11 ft 6 in.	3.5 m	19 ft 2 in.	5.8 m	33 ft	10 m	300 ft	91 m
7 ft	2.1 m	11 ft 6 11/16 in.	3.5 m	19 ft 10 in.	6 m	35 ft	11 m	400 ft	120 m
7.5 ft	2.3 m	11 ft 8 in.	3.6 m	19 ft 11 in.	6.1 m				

Area									
3.5 ft^2	0.3 m^2	110 ft^2	10 m^2	400 ft^2	37 m^2	1,800 ft^2	165 m^2	3,900 ft^2	360 m^2
6 ft^2	0.6 m^2	120 ft^2	11 m^2	450 ft^2	42 m^2	1,950 ft^2	180 m^2	4,000 ft^2	370 m^2
10 ft^2	0.9 m^2	124 ft^2	12 m^2	504 ft^2	47 m^2	2,000 ft^2	185 m^2	4,100 ft^2	380 m^2
12 ft^2	1.1 m^2	130 ft^2	12 m^2	585 ft^2	54 m^2	2,300 ft^2	215 m^2	4,500 ft^2	420 m^2
16 ft^2	1.5 m^2	144 ft^2	13 m^2	600 ft^2	56 m^2	2,500 ft^2	230 m^2	4,800 ft^2	445 m^2
18 ft^2	1.7 m^2	150 ft^2	14 m^2	648 ft^2	60 m^2	2,535 ft^2	235 m^2	5,000 ft^2	465 m^2
20 ft^2	1.9 m^2	168 ft^2	16 m^2	700 ft^2	65 m^2	2,600 ft^2	240 m^2	6,000 ft^2	555 m^2
24 ft^2	2.2 m^2	175 ft^2	16 m^2	756 ft^2	70 m^2	2,700 ft^2	250 m^2	6,400 ft^2	595 m^2
25 ft^2	2.3 m^2	196 ft^2	18 m^2	768 ft^2	71 m^2	2,734 ft^2	255 m^2	8,000 ft^2	740 m^2
32 ft^2	3.0 m^2	200 ft^2	18 m^2	800 ft^2	74 m^2	2,800 ft^2	260 m^2	8,800 ft^2	820 m^2
50 ft^2	4.6 m^2	225 ft^2	20 m^2	1,000 ft^2	93 m^2	3,000 ft^2	280 m^2	10,000 ft^2	930 m^2
55 ft^2	5.1 m^2	250 ft^2	23 m^2	1,200 ft^2	112 m^2	3,250 ft^2	300 m^2	13,100 ft^2	1215 m^2
64 ft^2	5.9 m^2	256 ft^2	24 m^2	1,300 ft^2	120 m^2	3,300 ft^2	305 m^2	25,000 ft^2	2320 m^2
70 ft^2	6.5 m^2	300 ft^2	28 m^2	1,365 ft^2	125 m^2	3,450 ft^2	320 m^2	40,000 ft^2	3720 m^2
80 ft^2	7.4 m^2	306 ft^2	28 m^2	1,400 ft^2	130 m^2	3,500 ft^2	325 m^2	50,000 ft^2	4650 m^2
90 ft^2	8.4 m^2	324 ft^2	30 m^2	1,500 ft^2	140 m^2	3,600 ft^2	335 m^2	52,000 ft^2	4830 m^2
100 ft^2	9 m^2	395 ft^2	37 m^2	1,700 ft^2	160 m^2	3,750 ft^2	350 m^2	100,000 ft^2	9230 m^2

EXHIBIT 1.3 *List of Conversions Found in NFPA 13.*
This list is a compilation of dimensions and metric conversions commonly used in NFPA 13. It intended to be an all-inclusive list and should cover every dimension, unit, and conversion illustrated in NFPA 13. This list will be shared with all water-based projects within NFPA and, eventually, will provide consistent conversions throughout all water-based standards.

EDUFIRE.IR

Flow							
30 gpm	115 lpm	120 gpm	455 lpm	500 gpm	1900 lpm	1000 gpm	3800 lpm
15 gpm	57 lpm	138 gpm	520 lpm	600 gpm	2250 lpm	1500 gpm	5700 lpm
20 gpm	75 lpm	200 gpm	760 lpm	700 gpm	2650 lpm	1992 gpm	7540 lpm
50 gpm	190 lpm	215.8 gpm	815 lpm	750 gpm	2850 lpm	1993 gpm	7543 lpm
60 gpm	230 lpm	250 gpm	950 lpm	800 gpm	3050 lpm	2156 gpm	8160 lpm
100 gpm	380 lpm	300 gpm	1150 lpm	850 gpm	3200 lpm	2575 gpm	9750 lpm
102.8 gpm	390 lpm	400 gpm	1500 lpm	900 gpm	3400 lpm	4907 gpm	18,572 lpm

Pressure							
5 psi	0.3 bar	22 psi	1.5 bar	75 psi	5.2 bar	189 psi	13 bar
7 psi	0.5 bar	25 psi	1.7 bar	90 psi	6.2 bar	200 psi	14 bar
10 psi	0.7 bar	30 psi	2.1 bar	100 psi	6.9 bar	259 psi	17 bar
11 psi	.8 bar	35 psi	2.4 bar	150 psi	10 bar	300 psi	21 bar
15 psi	1.0 bar	50 psi	3.4 bar	165 psi	11 bar	400 psi	28 bar
20 psi	1.4 bar	63 psi	4.3 bar	175 psi	12 bar		

Discharge Density					
.005 gpm/ft^2	.2 mm/min	.32 gpm/ft^2	13.0 mm/min	.57 gpm/ft^2	23.2 mm/min
.05 gpm/ft^2	2.04 mm/min	.33 gpm/ft^2	13.4 mm/min	.6 gpm/ft^2	24.5 mm/min
.1 gpm/ft^2	4.1 mm/min	.34 gpm/ft^2	13.9 mm/min	.61 gpm/ft^2	24.9 mm/min
.15 gpm/ft^2	6.1 mm/min	.35 gpm/ft^2	14.3 mm/min	.65 gpm/ft^2	26.5 mm/min
.16 gpm/ft^2	6.5 mm/min	.37 gpm/ft^2	15.1 mm/min	.68 gpm/ft^2	27.7 mm/min
.17 gpm/ft^2	7.0 mm/min	.375 gpm/ft^2	15.3 mm/min	.7 gpm/ft^2	28.5 mm/min
.18 gpm/ft^2	7.3 mm/min	.39 gpm/ft^2	15.9 mm/min	.74 gpm/ft^2	30.2 mm/min
.19 gpm/ft^2	7.7 mm/min	.4 gpm/ft^2	16.3 mm/min	.75 gpm/ft^2	30.6 mm/min
.2 gpm/ft^2	8.2 mm/min	.42 gpm/ft^2	17.1 mm/min	.77 gpm/ft^2	31.4 mm/min
.21 gpm/ft^2	8.6 mm/min	.425 gpm/ft^2	17.3 mm/min	.8 gpm/ft^2	32.6 mm/min
.225 gpm/ft^2	9.2 mm/min	.426 gpm/ft^2	17.4 mm/min	.85 gpm/ft^2	34.6 mm/min
.24 gpm/ft^2	9.8 mm/min	.44 gpm/ft^2	17.9 mm/min	.9 gpm/ft^2	36.7 mm/min
.25 gpm/ft^2	10.2 mm/min	.45 gpm/ft^2	18.3 mm/min	.92 gpm/ft^2	37.5 mm/min
.26 gpm/ft^2	10.6 mm/min	.46 gpm/ft^2	18.7 mm/min	.96 gpm/ft^2	39.1 mm/min
.28 gpm/ft^2	11.4 mm/min	.49 gpm/ft^2	20 mm/min	1.1 gpm/ft^2	44.8 mm/min
.29 gpm/ft^2	11.8 mm/min	.5 gpm/ft^2	20.4 mm/min	1.2 gpm/ft^2	48.9 mm/min
.3 gpm/ft^2	12.2 mm/min	.55 gpm/ft^2	22.4 mm/min	6.0 gpm/ft^2	245 mm/min
.31 gpm/ft^2	12.6 mm/min	.56 gpm/ft^2	22.8 mm/min	7.5 gpm/ft^2	306 mm/min

Volume			
1.76 cu in	28 ml	160 ft^3	4.5 m^3
15.5 ft^3	0.5 m^3	400 ft^3	11 m^3
17.4 ft^3	0.5 m^3	1,000 ft^3	28 m^3
17.6 ft^3	0.5 m^3	1,800 ft^3	51 m^3
20.7 ft^3	0.6 m^3	2,100 ft^3	59 m^3
21.1 ft^3	0.6 m^3	2,300 ft^3	65 m^3
22 ft^3	0.6 m^3	6,500 ft^3	184 m^3
100 ft^3	2.8 m^3	2.25M ft^3	63,720 m^3

Capacity			
16 oz.	0.5 L	150 gal	570 L
32 oz.	1 L	250 gal	950 L
1 gal	4 L	500 gal	1900 L
5 gal	20 L	750 gal	2850 L
40 gal	150 L	300,000 gal	1,135,500 L
100 gal	380 L		

Weight			
6 lb	2.7 kg	440 lb	200 kg
10 lb	4.5 kg	520 lb	235 kg
20 lb	9.1 kg	750 lb	340 kg
40 lb	18 kg	787 lb	355 kg
61 lb	27 kg	1200 lb	544 kg
91 lb	41 kg	1634 lb	740 kg
131 lb	59 kg	2000 lb	907 kg
200 lb	91 kg	2300 lb	1043 kg
250 lb	115 kg	4000 lb	1815 kg
350 lb	160 kg		

Density of Cotton Bales	
22.0 lb/ft^3	350 kg/m^3
22.7 lb/ft^3	365 kg/m^3
24.2 lb/ft^3	390 kg/m^3
28.4 lb/ft^3	455 kg/m^3
28.7 lb/ft^3	460 kg/m^3
32.2 lb/ft^3	515 kg/m^3

Gauge	
12	2.8 mm
14	1.98 mm
16	1.57 mm
22	0.78 mm
24	0.63 mm

Drill Size	
3/32 in.	2.3 mm
1/8 in.	3.2 mm
3/8 in.	10 mm

Velocity	
30 mph	49 km/h

EDUFIRE.IR

EDUFIRE.IR

CHAPTER

2

Referenced Publications

This chapter lists the mandatory publications referenced in NFPA 13. Nonmandatory publications referenced in the annexes are listed in Annex F. It is important to note that the codes and standards listed in Chapter 2 have a mandatory reference to them somewhere in the standard. This list is not intended to be a stand-alone list and is not intended to allow or encourage public input to add to this list unless a mandatory reference to another code or standard is made in the main body of the standard.

By locating the mandatory publications immediately after Chapter 1, Administration, the user is presented with the complete list of publications needed for effective use of the standard before reading the specific requirements. The reasons for locating all mandatory references in a single chapter are, first, to simplify the use of NFPA 13 and, second, to make updating the references more straightforward for adopting jurisdictions. The editions of the publications listed in Chapter 2 are legally referenced editions, unless the jurisdiction, when adopting NFPA 13, has updated the list of codes and standards.

The provisions of the publications that are mandated by NFPA 13 are also requirements. Regardless of whether an actual requirement resides within NFPA 13 or is mandatorily referenced and appears only in the referenced publication, it is a requirement that must be met to achieve compliance with NFPA 13. The path by which the model building code arrives at this same requirement for other NFPA standards is as follows: The *International Building Code (IBC)*, which references a limited number of NFPA standards, mandates in Section 901.2 that fire protection systems shall be installed, repaired, operated, and maintained in accordance with the *International Fire Code (IFC)*. The *IFC* states in Section 102.7 that the codes and standards it references (which are more than the *IBC*) are considered part of the requirements. Section 102.8 states where no standards are identified in the *IFC*, applicable standards of the NFPA are deemed as prima facie evidence of compliance with the code.

The documents listed in Chapter 2 are mandatory only to the extent called for in NFPA 13.

ASK THE AHJ

Can the authority having jurisdiction enforce an entire document as a requirement of NFPA 13 if it is listed in Chapter 2?

No. Only the specific sections of the documents referred to within the requirements of NFPA 13 can be enforced. These provisions typically deal with the fire sprinkler system design and installation requirements of the referenced document. For example, the authority having jurisdiction cannot enforce fire alarm or building construction requirements specified by NFPA 409, *Standard on Aircraft Hangars*, because it is listed in Chapter 2 of NFPA 13. Only the fire sprinkler system design and installation requirements of NFPA 409 are considered part of the NFPA 13 requirements per Section 26.24.

2.1 General.

The documents or portions thereof listed in this chapter are referenced within this standard and shall be considered part of the requirements of this document.

EDUFIRE.IR

2.2 NFPA Publications.

National Fire Protection Association, 1 Batterymarch Park, Quincy, MA 02169-7471.

NFPA 11, *Standard for Low-, Medium-, and High-Expansion Foam,* 2016 edition.
NFPA 14, *Standard for the Installation of Standpipe and Hose Systems,* 2016 edition.
NFPA 15, *Standard for Water Spray Fixed Systems for Fire Protection,* 2017 edition.
NFPA 16, *Standard for the Installation of Foam-Water Sprinkler and Foam-Water Spray Systems,* 2015 edition.
NFPA 17, *Standard for Dry Chemical Extinguishing Systems,* 2017 edition.
NFPA 20, *Standard for the Installation of Stationary Pumps for Fire Protection,* 2019 edition.
NFPA 22, *Standard for Water Tanks for Private Fire Protection,* 2018 edition.
NFPA 24, *Standard for the Installation of Private Fire Service Mains and Their Appurtenances,* 2019 edition.
NFPA 25, *Standard for the Inspection, Testing, and Maintenance of Water-Based Fire Protection Systems,* 2017 edition.
NFPA 30, *Flammable and Combustible Liquids Code,* 2018 edition.
NFPA 30B, *Code for the Manufacture and Storage of Aerosol Products,* 2019 edition.
NFPA 33, *Standard for Spray Application Using Flammable or Combustible Materials,* 2018 edition.
NFPA 40, *Standard for the Storage and Handling of Cellulose Nitrate Film,* 2019 edition.
NFPA 51B, *Standard for Fire Prevention During Welding, Cutting, and Other Hot Work,* 2019 edition.
NFPA 70®, National Electrical Code®, 2017 edition.
NFPA 72®, National Fire Alarm and Signaling Code®, 2019 edition.
NFPA 75, *Standard for the Fire Protection of Information Technology Equipment,* 2017 edition.
NFPA 82, *Standard on Incinerators and Waste and Linen Handling Systems and Equipment,* 2019 edition.
NFPA 96, *Standard for Ventilation Control and Fire Protection of Commercial Cooking Operations,* 2017 edition.
NFPA 101®, Life Safety Code®, 2018 edition.
NFPA 120, *Standard for Fire Prevention and Control in Coal Mines,* 2015 edition.
NFPA 170, *Standard for Fire Safety and Emergency Symbols,* 2018 edition.
NFPA 214, *Standard on Water-Cooling Towers,* 2016 edition.
NFPA 259, *Standard Test Method for Potential Heat of Building Materials,* 2018 edition.
NFPA 400, *Hazardous Materials Code,* 2019 edition.
NFPA 409, *Standard on Aircraft Hangars,* 2016 edition.
NFPA 701, *Standard Methods of Fire Tests for Flame Propagation of Textiles and Films*, 2015 edition.
NFPA 703, *Standard for Fire Retardant–Treated Wood and Fire-Retardant Coatings for Building Materials,* 2018 edition.
NFPA 750, *Standard on Water Mist Fire Protection Systems,* 2019 edition.
NFPA 780, *Standard for the Installation of Lightning Protection Systems,* 2017 edition.
NFPA 804, *Standard for Fire Protection for Advanced Light Water Reactor Electric Generating Plants,* 2015 edition.
NFPA 909, *Code for the Protection of Cultural Resource Properties — Museums, Libraries, and Places of Worship,* 2017 edition.
NFPA 1963, *Standard for Fire Hose Connections,* 2014 edition.

2.3 Other Publications.

Each document published by an organization other than NFPA carries an edition date that was specifically adopted by the automatic sprinkler system technical committees using the normal revision process

EDUFIRE.IR

involving public review. In other words, the technical committees have taken deliberate action to adopt specific editions of the documents published by organizations other than NFPA to ensure that the provisions of those documents, mandated for use within NFPA 13, are appropriate. As noted in the commentary at the beginning of the chapter, the extent to which these documents are mandatory is specified within NFPA 13.

2.3.1 ACI Publications.

American Concrete Institute, 38800 Country Club Drive, Farmington Hills, MI 48331-3439.

ACI 318, *Building Code Requirements for Structural Concrete and Commentary*, 2014.
ACI 355.2, *Qualification of Post-Installed Mechanical Anchors in Concrete and Commentary*, 2007.

2.3.2 ASCE Publications.

American Society of Civil Engineers, 1801 Alexander Bell Drive, Reston, VA 20191-4400.

ASCE/SEI 7, *Minimum Design Loads for Buildings and Other Structures,* 2016.

2.3.3 ASME Publications.

ASME International, Two Park Avenue, New York, NY 10016-5990.

Boiler and Pressure Vessel Code, Section IX, "Welding, Brazing, and Fusing Qualifications," 2015.
ASME A17.1, *Safety Code for Elevators and Escalators*, 2010/CSA B44-10.
ASME B1.20.1, *Pipe Threads, General Purpose (Inch)*, 2013.
ASME B16.1, *Gray Iron Pipe Flanges and Flanged Fittings, Classes 25, 125, and 250*, 2015.
ASME B16.3, *Malleable Iron Threaded Fittings, Classes 150 and 300*, 2011.
ASME B16.4, *Gray Iron Threaded Fittings, Classes 125 and 250*, 2011.
ASME B16.5, *Pipe Flanges and Flanged Fittings, NPS ½ through NPS 24 Metric/Inch Standard*, 2013.
ASME B16.9, *Factory-Made Wrought Buttwelding Fittings*, 2012.
ASME B16.11, *Forged Fittings, Socket-Welding and Threaded*, 2011.
ASME B16.15, *Cast Copper Alloy Threaded Fittings, Classes 125 and 250*, 2013.
ASME B16.18, *Cast Copper Alloy Solder Joint Pressure Fittings*, 2012.
ASME B16.22, *Wrought Copper and Copper Alloy Solder Joint Pressure Fittings*, 2013.
ASME B16.25, *Buttwelding Ends*, 2012.
ASME B31.1, *Power Piping*, 2014.
ASME B36.10M, *Welded and Seamless Wrought Steel Pipe*, 2015.

2.3.4 ASTM Publications.

ASTM International, 100 Barr Harbor Drive, P.O. Box C700, West Conshohocken, PA 19428-2959.

ASTM A53/A53M, *Standard Specification for Pipe, Steel, Black and Hot-Dipped, Zinc-Coated, Welded and Seamless*, 2012.
ASTM A106/A106M, *Standard Specification for Seamless Carbon Steel Pipe for High Temperature Service*, 2015.
ASTM A135/A135M, *Standard Specification for Electric-Resistance-Welded Steel Pipe*, 2009, reapproved 2014.
ASTM A153A/153M, *Standard Specification for Zinc Coating (Hot Dip) on Iron and Steel Hardware*, 2016.
ASTM A312/A312M, *Standard Specification for Seamless, Welded, and Heavily Cold Worked Austenitic Stainless Steel Pipes*, 2017.

EDUFIRE.IR

ASTM A403/A403M, *Standard Specification for Wrought Austenitic Stainless Steel Piping Fittings*, 2016.
ASTM A536, *Standard Specification for Ductile Iron Castings*, 2014.
ASTM A795/A795M, *Standard Specification for Black and Hot-Dipped Zinc-Coated (Galvanized) Welded and Seamless Steel Pipe for Fire Protection Use*, 2013.
ASTM B32, *Standard Specification for Solder Metal*, 2008, reapproved 2014.
ASTM B43, *Standard Specification for Seamless Red Brass Pipe, Standard Sizes*, 2015.
ASTM B75/B75M, *Standard Specification for Seamless Copper Tube*, 2011.
ASTM B88, *Standard Specification for Seamless Copper Water Tube*, 2014.
ASTM B251, *Standard Specification for General Requirements for Wrought Seamless Copper and Copper-Alloy Tube*, 2010.
ASTM B446, *Standard Specification for Nickel-Chromium-Molybdenum-Columbium Alloy (UNS N06625), Nickel-Chromium-Molybdenum-Silicon Alloy (UNS N06219), and Nickel-Chromium-Molybdenum-Tungsten Alloy (UNS N06625) Rod and Bar*, 2003, reapproved 2014.
ASTM B813, *Standard Specification for Liquid and Paste Fluxes for Soldering of Copper and Copper Alloy Tube*, 2016.
ASTM B828, *Standard Practice for Making Capillary Joints by Soldering of Copper and Copper Alloy Tube and Fittings*, 2002, reapproved 2010.
ASTM C635/C635M, *Standard Specification for the Manufacture, Performance, and Testing of Metal Suspension Systems for Acoustical Tile and Lay-In Panel Ceilings*, 2013a.
ASTM C636/C636M, *Standard Practice for Installation of Metal Ceiling Suspension Systems for Acoustical Tile and Lay-In Panels*, 2013.
ASTM E84, *Standard Test Method for Surface Burning Characteristics of Building Materials*, 2016.
ASTM E119, *Standard Test Methods for Fire Tests of Building Construction and Materials*, 2016a.
ASTM E136, *Standard Test Method for Behavior of Materials in a Vertical Tube Furnace at 750°C*, 2016a.
ASTM E2652, *Standard Test Method for Behavior of Materials in a Tube Furnace with a Cone-shaped Airflow Stabilizer, at 750°C*, 2016.
ASTM E2768, *Standard Test Method for Extended Duration Surface Burning Characteristics of Building Materials (30 min Tunnel Test)*, 2011.
ASTM E2965, *Standard Test for Determination of Low Levels of Heat Release Rate for Materials and Products Using an Oxygen Combustion Calorimeter*, 2017.
ASTM F437, *Standard Specification for Threaded Chlorinated Poly(Vinyl Chloride) (CPVC) Plastic Pipe Fittings, Schedule 80*, 2015.
ASTM F438, *Standard Specification for Socket-Type Chlorinated Poly(Vinyl Chloride) (CPVC) Plastic Pipe Fittings, Schedule 40*, 2015.
ASTM F439, *Standard Specification for Chlorinated Poly(Vinyl Chloride) (CPVC) Plastic Pipe Fittings, Schedule 80*, 2013.
ASTM F442/F442M, *Standard Specification for Chlorinated Poly(Vinyl Chloride) (CPVC) Plastic Pipe (SDR-PR)*, 2013e1.
ASTM F1121, *Standard Specification for International Shore Connections for Marine Fire Applications*, 1987, reapproved 2015.
ASTM SI10, *Standard for Use of the International System of Units (SI): The Modern Metric System*, 2010.

2.3.5 AWS Publications.

American Welding Society, 8669 NW 36 Street, #130, Miami, FL 33166-6672.

AWS A5.8M/A5.8, *Specification for Filler Metals for Brazing and Braze Welding*, 2011.
AWS B2.1/B2.1M, *Specification for Welding Procedure and Performance Qualification*, 2014.

EDUFIRE.IR

2.3.6 AWWA Publications.

American Water Works Association, 6666 West Quincy Avenue, Denver, CO 80235.

AWWA C104/A21.4, *Cement-Mortar Lining for Ductile-Iron Pipe and Fittings,* 2013.
AWWA C105/A21.5, *Polyethylene Encasement for Ductile-Iron Pipe Systems,* 2010.
AWWA C110/A21.10, *Ductile Iron and Gray Iron Fittings*, 2012.
AWWA C111/A21.11, *Rubber-Gasket Joints for Ductile-Iron Pressure Pipe and Fittings,* 2012.
AWWA C115/A21.15, *Flanged Ductile-Iron Pipe with Ductile-Iron or Gray-Iron Threaded Flanges,* 2011.
AWWA C116/A21.16, *Protective Fusion-Bonded Epoxy Coatings Internal and External Surface Ductile-Iron and Gray-Iron Fittings*, 2009, Erratum, 2010.
AWWA C150/A21.50, *Thickness Design of Ductile-Iron Pipe,* 2014.
AWWA C151/A21.51, *Ductile-Iron Pipe, Centrifugally Cast,* 2009.
AWWA C153/A21.53, *Ductile-Iron Compact Fittings*, 2011.
AWWA C200, *Steel Water Pipe 6 in. (150 mm) and Larger,* 2012, Errata, 2012.
AWWA C203, *Coal-Tar Protective Coatings and Linings for Steel Water Pipe,* 2015.
AWWA C205, *Cement-Mortar Protective Lining and Coating for Steel Water Pipe 4 in. (100 mm) and Larger — Shop Applied,* 2012.
AWWA C206, *Field Welding of Steel Water Pipe,* 2011.
AWWA C300, *Reinforced Concrete Pressure Pipe, Steel-Cylinder Type,* 2011.
AWWA C301, *Prestressed Concrete Pressure Pipe, Steel-Cylinder Type*, 2014.
AWWA C302, *Reinforced Concrete Pressure Pipe, Non-Cylinder Type*, 2011.
AWWA C303, *Reinforced Concrete Pressure Pipe, Bar-Wrapped, Steel-Cylinder Type, Pretensioned*, 2008.
AWWA C600, *Installation of Ductile-Iron Mains and Their Appurtenances,* 2010.
AWWA C602, *Cement-Mortar Lining of Water Pipe Lines in Place, 4 in. (100 mm) and Larger*, 2011.
AWWA C900, *Polyvinyl Chloride (PVC) Pressure Pipe, 4 in. Through 12 in. (100 mm Through 300 mm), for Water Transmission and Distribution*, 2007, Errata, 2008.
AWWA C905, *Polyvinyl Chloride (PVC) Pressure Pipe and Fabricated Fittings, 14 in. Through 48 in. (350 mm Through 1200 mm), for Water Transmission and Distribution*, 2010, Erratum, 2013.
AWWA C906, *Polyethylene (PE) Pressure Pipe and Fittings, 4 in. Through 63 in. (100 mm Through 1,650 mm), for Waterworks*, 2015.
AWWA C909, *Molecularly Oriented Polyvinyl Chloride (PVCO) Pressure Pipe, 4 in. Through 24 in. (100 mm Through 600 mm) for Water, Wastewater, and Reclaimed Water Service*, 2009.
AWWA M9, *Concrete Pressure Pipe*, 2008.
AWWA M23, *PVC Pipe — Design and Installation*, 2002.
AWWA M55, *PE Pipe — Design and Installation*, 2006.

N **2.3.7 ICC-ES Publications.**

ICC Evaluation Service, 900 Montclair Road, Suite A, Birmingham, AL 35213.

ICC-ES AC446, *Acceptance Criteria for Headed Cast-in Specialty Inserts in Concrete*, 2013.

2.3.8 IEEE Publications.

IEEE, Three Park Avenue, 17th Floor, New York, NY 10016-5997.

IEEE 45, *Recommended Practice for Electric Installations on Shipboard*, 2002.

EDUFIRE.IR

2.3.9 UL Publications.

Underwriters Laboratories Inc., 333 Pfingsten Road, Northbrook, IL 60062-2096.

UL 62, *Flexible Cords and Cables*, 2010.
UL 263, *Standard for Fire Tests of Building Construction and Materials*, 2011.
UL 723, *Standard for Test for Surface Burning Characteristics of Building Materials*, 2008, revised 2013.
UL 1581, *Reference Standard for Electrical Wires, Cables, and Flexible Cords*, 2011.

2.3.10 U.S. Government Publications.

U.S. Government Publishing Office, 732 North Capitol Street, NW, Washington, DC 20401-0001.

Title 46, CFR, Parts 54.15-10 Safety and Relief Valves, 56.20 Valves, 56.20-5(a) Markings, 56.50-95 Overboard Discharges and Shore Connections, 56.60 Materials, and 58.01-40 Machinery, Angle of Inclination.
Title 46, CFR, Subchapter F, "Marine Engineering."
Title 46, CFR, Subchapter J, "Electrical Engineering."

2.3.11 Other Publications.

Merriam-Webster's Collegiate Dictionary, 11th edition, Merriam-Webster, Inc., Springfield, MA, 2003.

2.4 References for Extracts in Mandatory Sections.

NFPA 1, *Fire Code,* 2018 edition.
NFPA 20, *Standard for the Installation of Stationary Pumps for Fire Protection*, 2019 edition.
NFPA 24, *Standard for the Installation of Private Fire Service Mains and Their Appurtenances,* 2019 edition.
NFPA 33, *Standard for Spray Application Using Flammable or Combustible Materials,* 2018 edition.
NFPA 36, *Standard for Solvent Extraction Plants*, 2017 edition.
NFPA 37, *Standard for the Installation and Use of Stationary Combustion Engines and Gas Turbines,* 2018 edition.
NFPA 40, *Standard for the Storage and Handling of Cellulose Nitrate Film,* 2019 edition.
NFPA 45, *Standard on Fire Protection for Laboratories Using Chemicals,* 2015 edition.
NFPA 51, *Standard for the Design and Installation of Oxygen–Fuel Gas Systems for Welding, Cutting, and Allied Processes,* 2018 edition.
NFPA 55, *Compressed Gases and Cryogenic Fluids Code,* 2016 edition.
NFPA 59, *Utility LP-Gas Plant Code,* 2018 edition.
NFPA 59A, *Standard for the Production, Storage, and Handling of Liquefied Natural Gas (LNG),* 2016 edition.
NFPA 70®, National Electrical Code®, 2017 edition.
NFPA 75, *Standard for the Fire Protection of Information Technology Equipment,* 2017 edition.
NFPA 76, *Standard for the Fire Protection of Telecommunications Facilities,* 2016 edition.
NFPA 82, *Standard on Incinerators and Waste and Linen Handling Systems and Equipment,* 2014 edition.
NFPA 86, *Standard for Ovens and Furnaces,* 2019 edition.
NFPA 91, *Standard for Exhaust Systems for Air Conveying of Vapors, Gases, Mists, and Particulate Solids,* 2015 edition.

EDUFIRE.IR

NFPA 99, *Health Care Facilities Code,* 2018 edition.
NFPA 99B, *Standard for Hypobaric Facilities,* 2018 edition.
NFPA 120, *Standard for Fire Prevention and Control in Coal Mines,* 2015 edition.
NFPA 122, *Standard for Fire Prevention and Control in Metal/Nonmetal Mining and Metal Mineral Processing Facilities,* 2015 edition.
NFPA 130, *Standard for Fixed Guideway Transit and Passenger Rail Systems,* 2017 edition.
NFPA 140, *Standard on Motion Picture and Television Production Studio Soundstages, Approved Production Facilities, and Production Locations,* 2018 edition.
NFPA 150, *Standard on Fire and Life Safety in Animal Housing Facilities,* 2019 edition.
NFPA 214, *Standard on Water-Cooling Towers,* 2016 edition.
NFPA 307, *Standard for the Construction and Fire Protection of Marine Terminals, Piers, and Wharves,* 2016 edition.
NFPA 318, *Standard for the Protection of Semiconductor Fabrication Facilities,* 2018 edition.
NFPA 400, *Hazardous Materials Code,* 2019 edition.
NFPA 415, *Standard on Airport Terminal Buildings, Fueling Ramp Drainage, and Loading Walkways,* 2016 edition.
NFPA 423, *Standard for Construction and Protection of Aircraft Engine Test Facilities,* 2016 edition.
NFPA 804, *Standard for Fire Protection for Advanced Light Water Reactor Electric Generating Plants,* 2015 edition.
NFPA 805, *Performance-Based Standard for Fire Protection for Light Water Reactor Electric Generating Plants,* 2015 edition.
NFPA 909, *Code for the Protection of Cultural Resource Properties — Museums, Libraries, and Places of Worship,* 2017 edition.
NFPA 5000®, *Building Construction and Safety Code®,* 2018 edition.

References Cited in Commentary

National Fire Protection Association, 1 Batterymarch Park, Quincy, MA 02169-7471.
NFPA 409, *Standard on Aircraft Hangars,* 2016 edition.

International Code Council, 500 New Jersey Avenue, NW, 6th floor, Washington DC 20001.
International Building Code®, 2018 edition.
International Fire Code®, 2018 edition.

EDUFIRE.IR

EDUFIRE.IR

CHAPTER

3

Definitions

REORGANIZATION NOTE

For the 2019 edition, Chapter 3 has changed in structure to alphabetize the list of defined terms, similar to a dictionary. This has resulted in a complete renumbering and a new sequence of terms. Also note that the definitions for *occupancies* (Extra Hazard Group 1 & 2, Light Hazard, and Ordinary Hazard Group 1 & 2) have been relocated from Chapter 5 to Chapter 3.

Many of the terms used throughout NFPA 13 are unique to sprinkler systems and are defined in Chapter 3. For terms used in the standard that are not defined in Chapter 3, the NFPA Glossary of Terms (or a dictionary such as *Merriam-Webster's Collegiate Dictionary*, 11th edition) should be used.

3.1 General.

The definitions contained in this chapter shall apply to the terms used in this standard. Where terms are not defined in this chapter or within another chapter, they shall be defined using their ordinarily accepted meanings within the context in which they are used. *Merriam-Webster's Collegiate Dictionary,* 11th edition, shall be the source for the ordinarily accepted meaning.

3.2 NFPA Official Definitions.

3.2.1* Approved. Acceptable to the authority having jurisdiction.

In the context of NFPA 13, the term *approved* has a different meaning from the term *listed,* which is defined in 3.2.3. A component that is approved is not necessarily listed. Components critical to the proper operation of a sprinkler system, such as alarm valves, dry pipe valves, sprinklers, and hangers, must be both listed and approved. Noncritical components that should not have an effect on system performance, such as drain valves, are not required to be listed but are required to be approved. See the commentary following 3.2.3 for more information on the term *listed.*

A.3.2.1 Approved. The National Fire Protection Association does not approve, inspect, or certify any installations, procedures, equipment, or materials; nor does it approve or evaluate testing laboratories. In determining the acceptability of installations, procedures, equipment, or materials, the authority having jurisdiction may base acceptance on compliance with NFPA or other appropriate standards. In the absence of such standards, said authority may require evidence of proper installation, procedure, or use. The authority having jurisdiction may also refer to the listings or labeling practices of an organization that is concerned with product evaluations and is thus in a position to determine compliance with appropriate standards for the current production of listed items.

EDUFIRE.IR

3.2.2* Authority Having Jurisdiction (AHJ). An organization, office, or individual responsible for enforcing the requirements of a code or standard, or for approving equipment, materials, an installation, or a procedure.

The term *authority having jurisdiction* is that person or office enforcing the standard. In cases where the standard is to be legally enforced, the authority having jurisdiction is usually a fire marshal or building official. It is common for multiple authorities having jurisdiction to review the same project and have responsibility for enforcing this standard and other standards. In many cases where NFPA 13 is utilized, the insuring agency for the facility may have requirements that differ from or exceed the requirements contained in NFPA 13. For all designs and applications, communication with all of the appropriate authorities having jurisdiction is important to determine the proper criteria.

A.3.2.2 Authority Having Jurisdiction (AHJ). The phrase "authority having jurisdiction," or its acronym AHJ, is used in NFPA documents in a broad manner, since jurisdictions and approval agencies vary, as do their responsibilities. Where public safety is primary, the authority having jurisdiction may be a federal, state, local, or other regional department or individual such as a fire chief; fire marshal; chief of a fire prevention bureau, labor department, or health department; building official; electrical inspector; or others having statutory authority. For insurance purposes, an insurance inspection department, rating bureau, or other insurance company representative may be the authority having jurisdiction. In many circumstances, the property owner or his or her designated agent assumes the role of the authority having jurisdiction; at government installations, the commanding officer or departmental official may be the authority having jurisdiction.

3.2.3* Listed. Equipment, materials, or services included in a list published by an organization that is acceptable to the authority having jurisdiction and concerned with evaluation of products or services, that maintains periodic inspection of production of listed equipment or materials or periodic evaluation of services, and whose listing states that either the equipment, material, or service meets appropriate designated standards or has been tested and found suitable for a specified purpose.

Most components that are critical to system performance must be listed. Such components include, but are not limited to, nonmetallic pipe, alarm valves, hangers, and sprinklers. However, this criterion has some exceptions. Steel and copper pipe, for example, that is specified in Table 7.3.1.1 is not required to be listed, because it has a long-established record of acceptable performance. However, manufacturers of Schedule 40 steel pipe commonly have the pipe listed to certify compliance with the industry standards for the specific pipe referenced in Table 7.3.1.1.

A.3.2.3 Listed. The means for identifying listed equipment may vary for each organization concerned with product evaluation; some organizations do not recognize equipment as listed unless it is also labeled. The authority having jurisdiction should utilize the system employed by the listing organization to identify a listed product.

3.2.4 Shall. Indicates a mandatory requirement.

The term *shall* indicates a requirement of this standard and mandates that a specific provision of NFPA 13 be followed. When the term *shall* is attached to a specific provision of the standard, compliance with that provision is not optional. However, any allowance to modify a base requirement is specifically stated in paragraphs subsequent to that requirement.

3.2.5 Should. Indicates a recommendation or that which is advised but not required.

The term *should* indicates a recommendation, not a requirement, of this standard. If the recommendation is not followed, the sprinkler system is still expected to perform satisfactorily. Terms such as *should* and *recommend* are used in the annexes of the document to identify a recommended practice or a best practice.

3.2.6 Standard. An NFPA Standard, the main text of which contains only mandatory provisions using the word "shall" to indicate requirements and that is in a form generally suitable

EDUFIRE.IR

for mandatory reference by another standard or code or for adoption into law. Nonmandatory provisions are not to be considered a part of the requirements of a standard and shall be located in an appendix, annex, footnote, informational note, or other means as permitted in the NFPA Manuals of Style. When used in a generic sense, such as in the phrase "standards development process" or "standards development activities," the term "standards" includes all NFPA Standards, including Codes, Standards, Recommended Practices, and Guides.

3.3 General Definitions.

3.3.1 A-Class Boundary. See 3.3.119.1.

3.3.2 Air Receiver. A chamber, compatible with an air compressor, that can store air under pressure that is higher in pressure than that in the dry pipe or preaction system piping.

Air receivers are air storage tanks used with dry pipe or preaction system air supplies using air compressors with capacities of 5.5 ft^3/min (160 L/min) at 10 psi (0.7 bar) or more. (See also 8.2.6.6.2.)

3.3.3 Air Reservoir. A chamber that can store air at the same pressure that is in the wet pipe system piping.

3.3.4* Aisle Width. The horizontal dimension between the face of the loads in racks under consideration.

The width of an aisle plays an important role in the required protection for a storage arrangement. For any given sprinkler system to be effective in controlling a fire, it must be able to limit horizontal fire spread beyond the point of fire origin. As the width of an aisle increases, the impact due to radiant heat transfer decreases, thus making it easier for the sprinkler system to prevent fire jump across the aisle. As a result, the sprinkler system requirements are sometimes reduced as the aisle width increases.

It should be noted that NFPA 13 provides two different measured horizontal widths — 3½ ft (1.1 m) and 24 in. (600 mm) — that are important for the purpose of defining a given protection arrangement involving rack storage. In the case of the 3½ ft (1.1 m) measurement, this is the minimum aisle width between storage racks that defines the type of storage rack (e.g., single-row, double-row, or multiple-row) to be protected. In other words, the depth of the rack in the direction perpendicular to the loading aisle is defined by an aisle width of at least 3½ ft (1.1 m). In the case of the 24 in. (600 mm) measurement, this is the maximum depth of a flue space. Therefore, any horizontal space between storage racks that is greater than 24 in. (600 mm) is considered an aisle, as opposed to a flue space. As a result, if in-rack sprinklers are needed for the protection of the storage rack, they must be located within the footprint of the storage rack, as opposed to being located within the space that exceeds 24 in. (600 mm) in width.

A.3.3.4 Aisle Width. See Figure A.3.3.4.

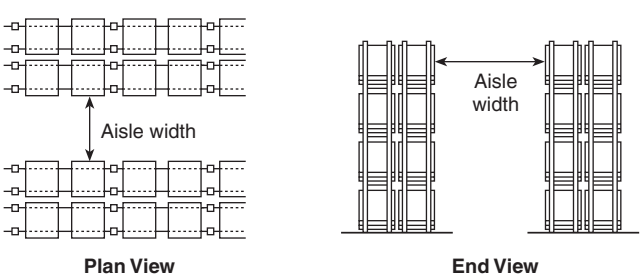

FIGURE A.3.3.4 *Illustration of Aisle Width.*

EDUFIRE.IR

3.3.5 Antifreeze Sprinkler System. See 3.3.206.1.

3.3.6 Appurtenance. An accessory or attachment that enables the private fire service main to perform its intended function. [**24,** 2019]

The term *appurtenance*, while extracted from NFPA 24, *Standard for the Installation of Private Fire Service Mains and Their Appurtenances*, in this context, can also apply to apparatus or instruments associated with other system components, such as valve trim, and is not limited to private fire service mains.

3.3.7 Arm-Over. A horizontal pipe that extends from the branch line to a single sprinkler or a sprinkler above and below a ceiling.

3.3.8 Array.

3.3.8.1 Closed Array. A storage arrangement where air movement through the pile is restricted because of 6 in. (150 mm) or less vertical flues.

3.3.8.2 Closed Array (Rolled Paper). A vertical storage arrangement in which the distances between columns in both directions are short [not more than 2 in. (50 mm) in one direction and 1 in. (25 mm) in the other].

3.3.8.3* Open Array. A storage arrangement where air movement through the pile is enhanced because of vertical flues larger than 6 in. (150 mm).

A.3.3.8.3 Open Array. Fire tests conducted to represent a closed array utilized 6 in. (150 mm) longitudinal flues and no transverse flues. Fire tests conducted to represent an open array utilized 12 in. (300 mm) longitudinal flues.

3.3.8.4 Open Array (Rolled Paper). A vertical storage arrangement in which the distance between columns in both directions is lengthy (all vertical arrays other than closed or standard).

3.3.8.5* Standard Array (Rolled Paper). A vertical storage arrangement in which the distance between columns in one direction is short [1 in. (25 mm) or less] and is in excess of 2 in. (50 mm) in the other direction.

A.3.3.8.5 Standard Array (Rolled Paper). The occasional presence of partially used rolls on top of columns of otherwise uniform diameter rolls does not appreciably affect the burning characteristics.

3.3.9 Automated Inspection and Testing. The performance of inspections and tests at a distance from the system or component being inspected or tested through the use of electronic devices or equipment installed for the purpose.

3.3.10 Automatic Sprinkler. See 3.3.205.1.

3.3.11 Automotive Components on Portable Racks. Instrument panels, windshields, metal and plastic gasoline tanks, heater housings, door panels, interior trim, bumper facia, wiring harnesses, sheet metal, body components, engines, driveline components, steering mechanisms, auxiliary motors, and lighting — all with or without expanded Group A plastic dunnage. This definition does not include the storage of air bags, tires, and seats on portable racks.

The term *automotive components on portable racks* was added to the 2010 edition to properly address new design arrangements (see Section 23.10) for protecting automotive components. This term applies only to the protection criteria outlined in Section 23.10 for the protection of these components and storage arrangements.

3.3.12* Back-to-Back Shelf Storage. Two solid or perforated shelves up to 30 in. (750 mm) in depth each, not exceeding a total depth of 60 in. (1.5 m), separated by a longitudinal vertical

EDUFIRE.IR

barrier such as plywood, particleboard, sheet metal, or equivalent, with a maximum 0.25 in. (6 mm) diameter penetrations and no longitudinal flue space and a maximum storage height of 15 ft (4.6 m).

The term *back-to-back shelf storage* was introduced in the 2010 edition to clarify the requirements for protection of shelf storage in those sections describing storage, including Section 4.3 and the storage chapters. The recommendations are based on the Fire Protection Research Foundation (FPRF) report of full-scale fire tests, "Evaluation of Sprinkler Performance in Protecting Gondola Type Shelf Storage."

A.3.3.12 Back-to-Back Shelf Storage. The requirement for the lack of a longitudinal flue space does not prohibit a small gap between the units or a small gap between the shelves and the vertical barrier. See Figure A.3.3.12.

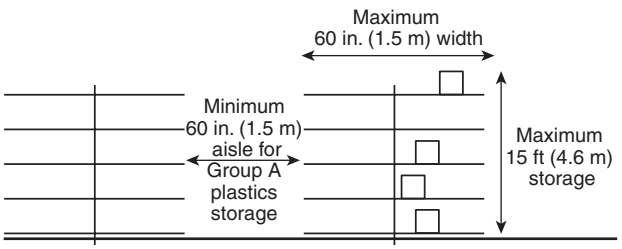

FIGURE A.3.3.12 *Back-to-Back Shelf Storage.*

3.3.13* Baled Cotton. A natural seed fiber wrapped and secured in industry-accepted materials, usually consisting of burlap, woven polypropylene, or sheet polyethylene, and secured with steel, synthetic or wire bands, or wire; also includes linters (lint removed from the cottonseed) and motes (residual materials from the ginning process). *(See Table A.3.3.13.)*

A.3.3.13 Baled Cotton. See Table A.3.3.13.

TABLE A.3.3.13 *Typical Cotton Bale Types and Approximate Sizes*

	Dimensions		*Average Weight*		*Volume*		*Density*	
Bale Type	*in.*	*mm*	*lb*	*kg*	*ft³*	*m³*	*lb/ft³*	*kg/m³*
Compressed, standard	57 × 29 × 23	1425 × 725 × 575	500	225	22.0	0.62	22.7	365
Gin, standard	55 × 31 × 21	1325 × 775 × 525	500	225	20.7	0.58	24.2	390
Compressed, universal	58 × 25 × 21	1450 × 625 × 525	500	225	17.6	0.50	28.4	455
Gin, universal	55 × 26 × 21	1375 × 650 × 525	500	225	17.4	0.49	28.7	460
Compressed high density	58 × 22 × 21	1450 × 550 × 525	500	225	15.5	0.44	32.2	515
Densely packed baled cotton	55 × 21 × 27.6 to 35.4	1375 × 525 × 690 to 885	500	225	21.1	0.60	22.0	350

3.3.14 Banded Roll Paper Storage. See 3.3.182.1.

3.3.15 Banded Tires. A storage method in which a number of tires are strapped together.

3.3.16* Bathroom. Within a dwelling unit, any room or compartment dedicated to personal hygiene, containing a toilet, sink, or bathing capability such as a shower or tub.

The term *bathroom* identifies and clarifies the physical boundaries and characteristics of a bathroom. This definition provides clarification when applied to 9.2.4.1.1 for the omission of sprinklers in some bathrooms. Many modern dwelling units contain several small adjacent rooms that together provide the basic requirements for the term *bathroom*. These individual rooms or compartments should be treated as bathrooms.

EDUFIRE.IR

A.3.3.16 Bathroom. A room is still considered a bathroom if it contains just a toilet. Additionally, two bathrooms can be adjacent to each other and are considered separate rooms, provided they are enclosed with the required level of construction. A compartment containing only a toilet, regardless of its intended use, is considered a bathroom.

3.3.17 B-Class Boundary. See 3.3.119.2.

3.3.18 Bin Box Storage. Storage in five-sided wood, metal, or cardboard boxes with open face on the aisles in which boxes are self-supporting or supported by a structure so designed that little or no horizontal or vertical space exists around boxes.

3.3.19 Branch Lines. The pipes supplying sprinklers, either directly or through sprigs, drops, return bends, or arm-overs.

Branch lines, as identified in Exhibit 3.1, are usually the smallest diameter pipes installed on a system and normally have sprinklers attached to them.

EXHIBIT 3.1 Diagram of Typical Complete Sprinkler System.

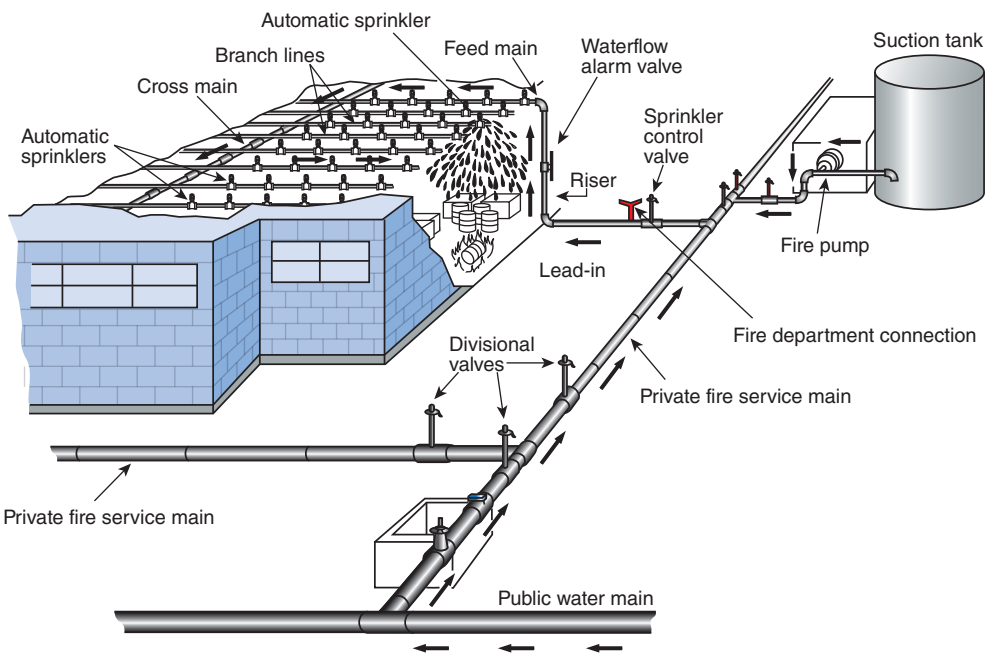

3.3.20 Bulkhead. A vertical barrier across the rack.

3.3.21* Carton Records Storage. A Class III commodity consisting predominantly of paper records in cardboard cartons.

A.3.3.21 Carton Records Storage. Carton records storage is a Class III commodity when it is within the definition of 20.4.3 and is permitted to contain a limited amount (5 percent by weight or volume or less) of Group A or Group B plastics. Materials stored include Class I and II commodities, paper business records, books, magazines, stationery, newspapers, cardboard dividers, and cartons. See Table A.20.4.3.

Although carton records storage falls within the Class III commodity classification, the testing that was used to support the design criteria located in Section 21.11, which relates to this definition, was limited to this specific type of Class III storage, not the broad range of combustibles contained in the Class III commodity classification.

EDUFIRE.IR

3.3.22 Cartoned. A method of storage consisting of corrugated cardboard or paperboard containers fully enclosing the commodity.

3.3.23 Catwalk. For the purposes of carton records storage, a storage aid consisting of either open metal grating or solid horizontal barriers supported from a rack storage system that is utilized as a walkway for access to storage at elevated levels. Catwalks are accessed using stairs and are not separate floors of a building.

See Figure A.21.11.6.3.5(a) for an example of a catwalk used in records storage.

3.3.24 Ceiling Height. The distance between the floor and the underside of the ceiling above (or roof deck) within the area.

3.3.25* Ceiling Pocket. An architectural ceiling feature that consists of a bounded area of ceiling located at a higher elevation than the attached lower ceiling.

A.3.3.25 Ceiling Pocket. It is not the intent of this definition to be applied to structural and/or framing members otherwise used to define obstructed or unobstructed construction. Ceiling pockets can be protected or unprotected. A ceiling pocket where the upper ceiling is within the allowable vertical distance from the sprinkler deflector should be considered a protected ceiling pocket. Buildings with protected ceiling pockets are permitted to use the quick-response reduction of 19.3.3.2.3. Buildings with unprotected ceiling pockets greater than 32 ft^2 (3.0 m^2) are not allowed to use the quick-response reduction of 19.3.3.2.3.

The definition of the term *ceiling pocket* was added to the 2010 edition to clarify that not all ceiling depressions are considered ceiling pockets for the purposes of applying the requirements of 10.2.9, 11.2.8, or 19.3.3.2.3.1(4).

Some minor depressions in ceilings can be protected from ceiling sprinklers in adjacent ceiling areas and should not be considered ceiling pockets in accordance with 10.2.9, 11.2.8, or 19.3.3.2.3.1(4). An example of this would be a ceiling depression that is 10 in. (254 mm) deep that does not have any sprinklers in it but is protected by sprinklers at the surrounding elevation that are 2 in. (50 mm) below the ceiling at their location. Such sprinklers are within 12 in. (300 mm) of the ceiling of the depression and as a result are in compliance with 10.2.6.1.1.1 and 11.2.4.1.1.1 requiring sprinklers to be within 1 in. to 12 in. (25 mm to 300 mm) from the ceiling.

3.3.26 Ceiling Types.

Definitions of ceiling types help to clarify that, where used throughout NFPA 13, these terms have specific meanings that affect the use of specific sprinklers. In many cases, these terms provide limits on the applications of specific types of sprinklers and must be understood when choosing a specific sprinkler. Additionally, some sprinklers are permitted to be used only with specific ceiling types. Each type of sprinkler should be reviewed based on the requirements of Chapters 10 through 15.

3.3.26.1 Flat Ceiling. A continuous ceiling in a single plane.

The term *flat ceiling* does not mean that the ceiling is horizontal. In many instances and applications, flat ceilings have some type of slope.

3.3.26.2 Horizontal Ceiling. A ceiling with a slope not exceeding 2 in 12.

A horizontal ceiling is limited to a ceiling plane where the slope of the ceiling plane does not exceed 2 units of rise for every 12 units of run. Exhibit 3.2 illustrates how to determine ceiling slope.

3.3.26.3 Sloped Ceiling. A ceiling with a slope exceeding 2 in 12.

A sloped ceiling is limited to a ceiling plane where the slope of the ceiling plane exceeds 2 units of rise for every 12 units of run. (See Exhibit 3.2.)

3.3.26.4 Smooth Ceiling. A continuous ceiling free from significant irregularities, lumps, or indentations.

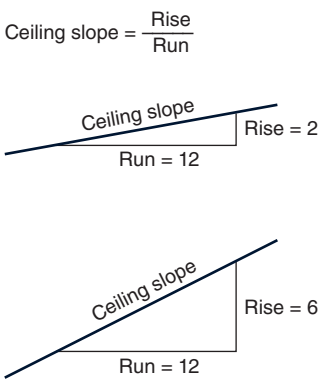

EXHIBIT 3.2 Ceiling Slope.

EDUFIRE.IR

The term *smooth ceiling* applies to the actual surface of the ceiling and is applicable to each type of ceiling defined in 3.3.26.1, 3.3.26.2, and 3.3.26.3.

3.3.27 Central Safety Station. See 3.3.119.3.

3.3.28 Check Valve. A valve that allows flow in one direction only. [**24,** 2019]

3.3.29 Clearance to Ceiling. The distance from the top of storage to the ceiling above.

3.3.30 Closed Array (Palletized, Solid-Piled, Bin Box, and Shelf Storage). See 3.3.8.1.

3.3.31 Closed Array (Rolled Paper). See 3.3.8.2.

3.3.32 Cloud Ceiling. Any ceiling system, not including sloped ceilings, installed in the same plane with horizontal openings to the structure above on two or more sides.

Cloud ceilings are becoming more common in office buildings and public spaces, such as shops and restaurants, as a way to hide system equipment including ductwork and piping, without installing a complete, wall-to-wall suspended or drop ceiling. These ceiling systems have historically required sprinkler protection both above and below the cloud ceiling. Testing conducted by the Fire Protection Research Foundation (FPRF) led to the development of the criteria in 9.2.7. Exhibit 3.3 shows a cloud ceiling with sprinklers installed "below" the cloud.

EXHIBIT 3.3 *Typical Cloud Ceiling Installation. (Courtesy of Armstrong Ceiling & Wall Systems)*

3.3.33 Column (Rolled Paper). A single vertical stack of rolls.

3.3.34 Combined Dry Pipe–Reaction Sprinkler System. See 3.3.206.2.

3.3.35 Commodity. The combination of products, packing material, and container that determines commodity classification.

3.3.36 Compact Storage. Storage on solid shelves not exceeding 36 in. (900 mm) in total depth, arranged as part of a compact storage module, with no more than 30 in. (750 mm) between shelves vertically and with no internal vertical flue spaces other than those between individual shelving sections.

EDUFIRE.IR

3.3.37 Compact Storage Module. A type of shelving unit consisting of compact storage whereby the units move to allow for storage to be pushed together creating a storage unit with no flues or minimal spaces between units. Aisles are created by moving the shelving unit. Compact storage modules can be manual or electric in operation.

3.3.38 Compartment. A space completely enclosed by walls and a ceiling. Each wall in the compartment is permitted to have openings to an adjoining space if the openings have a minimum lintel depth of 8 in. (200 mm) from the ceiling and the total width of the openings in each wall does not exceed 8 ft (2.4 m). A single opening of 36 in. (900 mm) or less in width without a lintel is permitted where there are no other openings to adjoining spaces.

The term *compartment* is primarily associated with the use of fast-response sprinklers, which include residential and quick-response-type sprinklers. For a system using residential sprinklers in a compartment, 9.4.3.2 requires that all the sprinklers within the compartment be of the quick-response type. Additionally, the term *compartment* applies to areas where light hazard systems are converted to use quick-response or residential sprinklers (see 9.4.3.6) or to areas where the area of operation reduction is taken in accordance with the requirements of 19.3.3.2.3.1.

Openings in a compartment can extend to the ceiling only for a single opening up to 36 in. (900 mm) in width. For wider openings, a minimum 8 in. (200 mm) lintel ensures that heat from a fire collects at the ceiling in the room, which results in faster operation of the sprinklers nearest to the fire.

FAQ [3.3.38]

Why are openings without lintels in compartments limited to a single opening having a maximum width of 36 in. (900 mm)?

The single opening of 36 in. (900 mm) or less without a lintel was added in the 2010 edition to address typical office-type applications with a full-height door opening that does not incorporate a lintel. The single 36 in. (900 mm) opening was substantiated by the report "The Impact of 8 in. Lintels on Sprinkler Activation within Small Rooms," submitted by the American Fire Sprinkler Association.

3.3.39* Compartmented. The rigid separation of the products in a container by dividers that form a stable unit under fire conditions.

A.3.3.39 Compartmented. Cartons used in most of the FM Global–sponsored plastic tests involved an ordinary 200 lb (91 kg) test of outside corrugated cartons with five layers of vertical pieces of corrugated carton used as dividers on the inside. There were also single horizontal pieces of corrugated carton between each layer.

Other tests sponsored by the Society of Plastics Industry, Industrial Risk Insurers, FM Global, and Kemper used two vertical pieces of carton (not corrugated) to form an "X" in the carton for separation of product. This arrangement was not considered compartmented, as the pieces of carton used for separations were flexible (not rigid), and only two pieces were used in each carton.

3.3.40 Concealed Sprinkler. See 3.3.205.3.1.

3.3.41 Construction Definitions.

Section 3.3.41 contains construction definitions. Ceiling construction affects sprinkler installation, in that it is a factor in determining the position of the sprinkler deflector in relation to the ceiling and in determining the allowable area of coverage for a given sprinkler.

Sprinklers must be positioned so that they are located in the hot gas layer that develops near the ceiling during a fire. This sprinkler placement allows for timely operation. Depending on the ceiling construction type, sprinklers are permitted to be located at various distances from the ceiling so that they activate shortly after the fire begins.

Sprinklers also must be positioned so that their discharge pattern is not adversely affected by construction elements at the ceiling. If water cannot reach the combustible surfaces, the effectiveness of the sprinkler system will be compromised. To a large degree, potential obstructions to sprinkler discharge are addressed by the obstruction requirements of 9.5.5.

Ceiling construction also affects sprinkler discharge. Therefore, the maximum area of coverage for a specific type of sprinkler depends on the type of ceiling construction under which the sprinkler is installed.

The numerous construction terms in NFPA 13 fall into two basic categories: obstructed construction and unobstructed construction. The construction types identified in A.3.41.1 and A.3.41.2 aid in determining whether a given ceiling construction should be classified as obstructed or unobstructed. The annex material also describes particular ceiling features that influence the placement of sprinklers.

EDUFIRE.IR

3.3.41.1* Obstructed Construction. Panel construction and other construction where beams, trusses, or other members impede heat flow or water distribution in a manner that materially affects the ability of sprinklers to control or suppress a fire.

A.3.3.41.1 Obstructed Construction. The following examples of obstructed construction are provided to assist the user in determining the type of construction feature:

(1) *Beam and Girder Construction*. The term *beam and girder construction* as used in this standard includes noncombustible and combustible roof or floor decks supported by wood beams of 4 in. (100 mm) or greater nominal thickness or concrete or steel beams spaced 3 ft to 7½ ft (900 mm to 2.3 m) on center and either supported on or framed into girders. [Where supporting a wood plank deck, this includes semi-mill and panel construction, and where supporting (with steel framing) gypsum plank, steel deck, concrete, tile, or similar material, this includes much of the so-called noncombustible construction.]

Beam and girder construction consists of roof or floor decks supported by beams spaced 3 ft to 7½ ft (900 mm to 2.3 m) on center that are framed either onto or into girders. This construction type results in the formation of ceiling bays or panels. Exhibit 3.4 illustrates an example of beam and girder construction in which the beams are framed into the girders. Exhibit 3.5 shows the bays formed by the beams.

The close spacing of the beams creates a greater likelihood of sprinkler spray pattern interference. Therefore, the positioning and maximum area of coverage rules for obstructed construction are different from the rules for unobstructed construction.

Beam and girder construction causes heat from a fire to accumulate within the bays or panels formed by the supporting members. As a fire continues to generate heat, the heat flows down the length of the members, activating only sprinklers within that bay or panel. Once the capacity of the bays or panels is reached, fire gases spill over into adjacent bays or panels and allow sprinklers in other bays and panels to activate. Because of this phenomenon, the deflector positioning rules in Chapters 10 through 15 provide a degree of flexibility in positioning the deflector in relation to the ceiling and the supporting members.

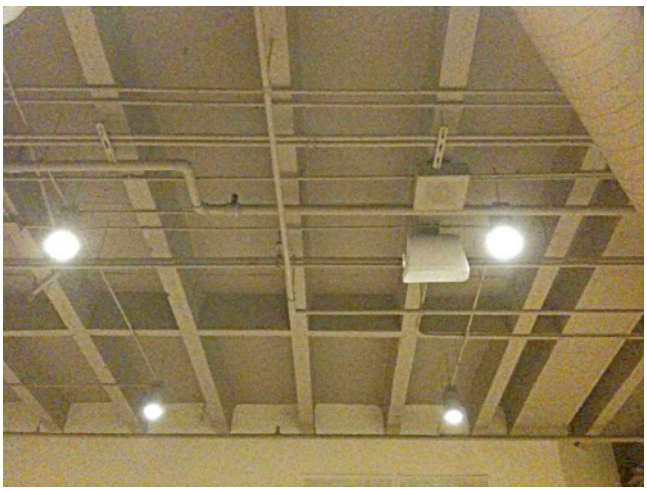

EXHIBIT 3.4 *Beam and Girder Construction. (Courtesy of American Fire Sprinkler Association)*

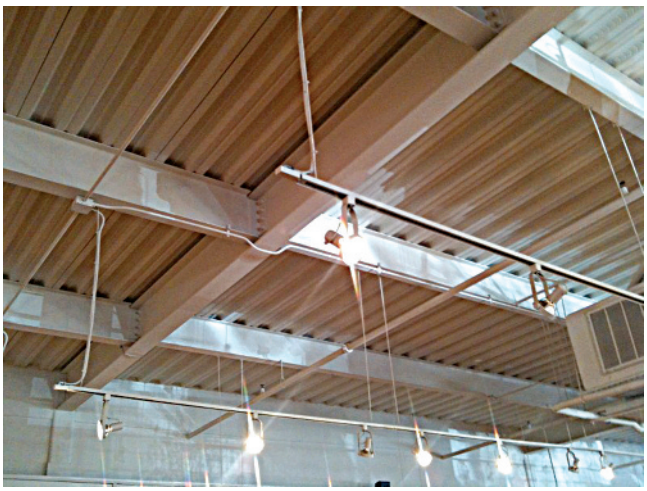

EXHIBIT 3.5 *Bays Formed by Beam and Girder Construction. (Courtesy of American Fire Sprinkler Association)*

(2) *Concrete Tee Construction*. The term *concrete tee construction* as it is used in this standard refers to solid concrete members with stems (legs) having a nominal thickness less than the nominal height. *[See Figure A.3.3.41.1(a) for examples of concrete tee construction.]*

EDUFIRE.IR

(3) *Composite Wood Joist Construction*. The term *composite wood joist construction* refers to wood beams of "I" cross section constructed of wood flanges and solid wood web, supporting a floor or roof deck. Composite wood joists can vary in depth up to 48 in. (1200 mm), can be spaced up to 48 in. (1200 mm) on centers, and can span up to 60 ft (18 m) between supports. Joist channels should be firestopped to the full depth of the joists with material equivalent to the web construction so that individual channel areas do not exceed 300 ft^2 (28 m^2). *[See Figure A.3.3.41.1(b) for an example of composite wood joist construction.]*

NFPA 13 provides guidance on the placement of sprinklers under composite wood joists only where the joists do not exceed a total depth of 22 in. (550 mm).

The firestopping between the composite wood joists that form the 300 ft^2 (28 m^2) pocket is needed to trap the heat and accelerate sprinkler operation. [See Figure A.3.3.41.1(b).]

Composite wood joists are typically referred to as wood "I" beams. The predominant use of these members was initially found in western North America, but now they are quite common in other areas as well.

(4) *Panel Construction*. The term *panel construction* as used in this standard includes ceiling panels formed by members capable of trapping heat to aid the operation of sprinklers and limited to a maximum of 300 ft^2 (28 m^2) in area. There should be no unfilled penetrations in the cross-sectional area of the bounding structural members including the interface at the roof. Beams spaced more than 7½ ft (2.3 m) apart and framed into girders qualify as panel construction, provided the 300 ft^2 (28 m^2) area limitation is met.

(5) *Semi-Mill Construction*. The term *semi-mill construction* as used in this standard refers to a modified standard mill construction, where greater column spacing is used and beams rest on girders.

(6) *Wood Joist Construction*. The term *wood joist construction* refers to solid wood members of rectangular cross section, which can vary from 2 in. to 4 in. (50 mm to 100 mm) nominal width and can be up to 14 in. (350 mm) nominal depth, spaced up to 3 ft (900 mm) on centers, and can span up to 40 ft (12 m) between supports, supporting a floor or roof deck. Solid wood members less than 4 in. (100 mm) nominal width and up to 14 in. (350 mm) nominal depth, spaced more than 3 ft (900 mm) on centers, are also considered as wood joist construction. Wood joists can exceed 14 in. (350 mm) in nominal depth.

Wood joist construction, a type of light combustible construction that is discussed in A.3.3.41.1(6), uses nominal 2 in. to 4 in. (50 mm to 100 mm) wide solid wood members on edge to support a ceiling or roof deck. Revisions to the 2013 edition first acknowledged that the depth of the wood members can exceed 14 in. (350 mm). Sheathing such as drywall cannot be fastened to the underside of the joists. Sheathed joists are considered unobstructed construction. Most construction assemblies that use solid wood members less than 4 in. (100 mm) thick are classified as wood joists.

(7) *Bar Joist Construction with Fireproofing*. In order to meet building codes, bar joists are often covered with fireproofing materials. In such an event, if greater than 30 percent of the area of the joist is obstructed, it should be considered obstructed construction.

(8) *Steel Purlin Construction*. This term refers to clear span or multiple span buildings with straight or tapered columns and frames supporting C- or Z-type purlins greater than 4 in. (100 mm) in depth spaced up to 7½ ft (2.3 m) on center.

(9) *Truss Construction (Wood or Steel)*. The term *truss construction* refers to parallel or pitched chord members connected by open web members supporting a roof or floor deck with top and bottom members greater than 4 in. (100 mm) in depth. *[See Figure A.3.3.41.1(c).]*

FAQ [A.3.3.41.1(4)]

Can panel construction with members spaced more than 7½ ft (2.3 m) apart be considered obstructed construction?

Panel construction, which is discussed in A.3.3.41.1(4), can be considered a version of beam and girder construction in which beams are framed into girders and form a ceiling panel with a maximum area of 300 ft^2 (28 m^2). Panel construction with members spaced more than 7½ ft (2.3 m) apart can be considered obstructed construction, provided the ceiling panels do not exceed an area of 300 ft^2 (28 m^2). Where ceiling panels consist of an area in excess of 300 ft^2 (28 m^2), they cannot be considered obstructed construction. (See Exhibit 3.4 and Exhibit 3.5.)

FAQ [A.3.3.41.1(6)]

Can composite wood joists and wood trusses be considered solid wood joist construction?

Composite wood joists and wood trusses should not be considered solid wood members.

EDUFIRE.IR

(10) *Bar Joist Construction (Wood or Steel).* The term *bar joist construction* refers to construction employing joists consisting of steel truss-shaped members. Wood truss-shaped members, which consist of wood top and bottom chord members with steel tube or bar webs, are also defined as bar joists. Bar joists include noncombustible or combustible roof or floor decks on bar joist construction with top and bottom chord members greater than 4 in. (100 mm) in depth. *[See Figure A.3.3.41.2(a) and Figure A.3.3.41.2(b) for examples of bar joist construction.]*

The annex descriptions of *truss construction (wood or steel)* and *bar joist construction (wood or steel)* were added in the 2013 edition under the category of obstructed construction to clarify these terms where the depth of the top and bottom cords exceed 4 in. (100 mm). Bar joist construction as referenced in A.3.3.41.2(1) where the depth of the top and bottom chords is 4 in. (100 mm) or less is considered unobstructed construction.

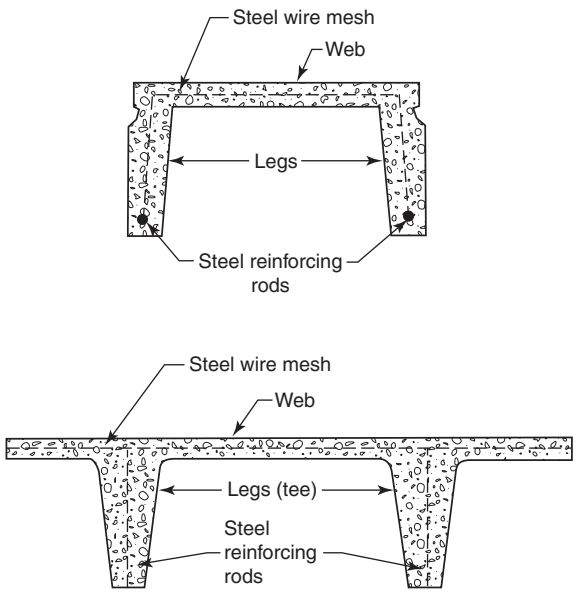

FIGURE A.3.3.41.1(a) *Typical Concrete Tee Construction.*

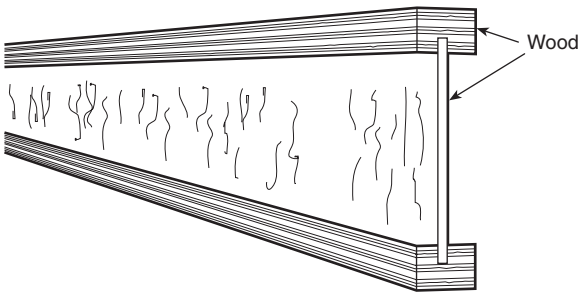

FIGURE A.3.3.41.1(b) *Typical Composite Wood Joist Construction.*

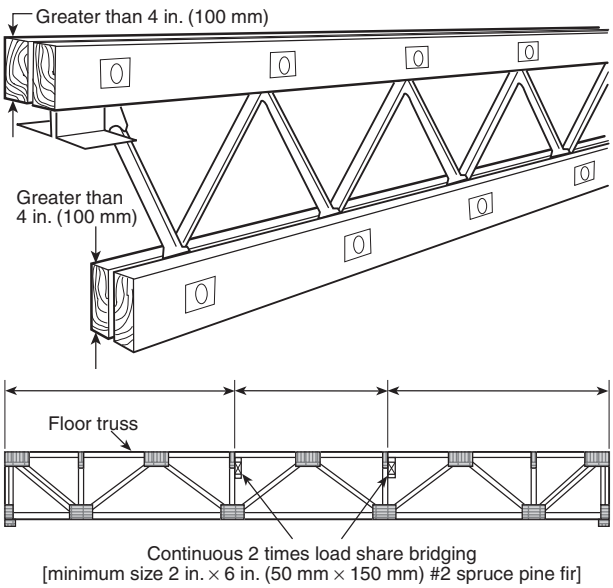

FIGURE A.3.3.41.1(c) *Wood Truss Construction.*

3.3.41.2* Unobstructed Construction. Construction where beams, trusses, or other members do not impede heat flow or water distribution in a manner that materially affects the ability of sprinklers to control or suppress a fire. Unobstructed construction has horizontal structural members that are not solid, where the openings are at least 70 percent of the cross-section area and the depth of the member does not exceed the least dimension of the openings, or all construction types, with the exception of panel construction, where the spacing of structural members exceeds 7½ ft (2.3 m) on center.

EDUFIRE.IR

Examples of traditional unobstructed construction are identified in A.3.3.41.2.

A.3.3.41.2 Unobstructed Construction. The following examples of unobstructed construction are provided to assist the user in determining the type of construction feature:

(1) *Bar Joist Construction.* The term *bar joist construction* refers to construction employing joists consisting of steel truss-shaped members. Wood truss-shaped members, which consist of wood top and bottom chord members with steel tube or bar webs, are also defined as bar joists. Bar joists include noncombustible or combustible roof or floor decks on bar joist construction with top and bottom chord members not exceeding 4 in. (100 mm) in depth. *[See Figure A.3.3.41.2(a) and Figure A.3.3.41.2(b) for examples of bar joist construction.]*

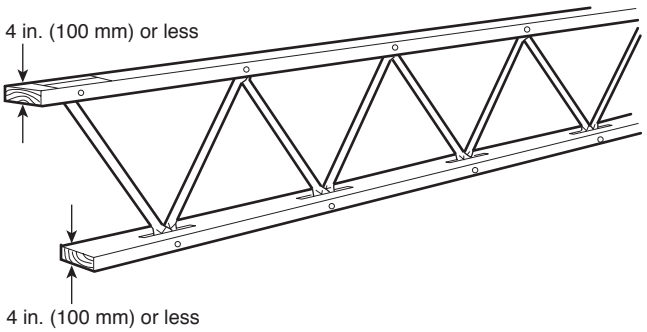

FIGURE A.3.3.41.2(a) *Wood Bar Joist Construction.*

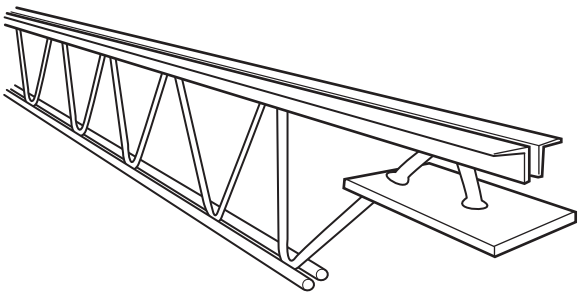

FIGURE A.3.3.41.2(b) *Open-Web Bar Joist Construction.*

Also known as open-web steel joist construction, bar joist construction utilizes a top and bottom wood or steel chord. Unlike solid wood or composite wood joists, this construction type allows heat and fire gases to pass though it and spread out across the ceiling. Obstruction to water distribution is minimal, as inferred by the spacing and positioning rules of Chapters 10 through 15. The maximum protection area per sprinkler for standard spray upright and pendent sprinklers under unobstructed construction can be as high as 200 ft^2 (18.6 m^2) for pipe schedule systems and 225 ft^2 (20.9 m^2) for hydraulically calculated systems [see Table 10.2.4.2.1(a)]. Figure A.3.3.41.2(a), Figure A.3.3.41.2(b), and Exhibit 3.6 show examples of bar joist construction.

EXHIBIT 3.6 *Bar Joist Construction.*

(2) *Open-Grid Ceilings*. The term *open-grid ceilings* as used in this standard refers to ceilings in which the openings are ¼ in. (6 mm) or larger in the least dimension, the thickness of the ceiling material does not exceed the least dimension of the openings, and the openings constitute at least 70 percent of the ceiling area.

EDUFIRE.IR

(3) *Smooth Ceiling Construction*. The term *smooth ceiling construction* as used in this standard includes the following:
   (a) Flat slab, pan-type reinforced concrete
   (b) Continuous smooth bays formed by wood, concrete, or steel beams spaced more than 7½ ft (2.3 m) on centers — beams supported by columns, girders, or trusses
   (c) Smooth roof or floor decks supported directly on girders or trusses spaced more than 7½ ft (2.3 m) on center
   (d) Smooth monolithic ceilings of at least ¾ in. (20 mm) of plaster on metal lath or a combination of materials of equivalent fire-resistive rating attached to the underside of wood joists, wood trusses, and bar joists
   (e) Open-web-type steel beams, regardless of spacing
   (f) Smooth shell-type roofs, such as folded plates, hyperbolic paraboloids, saddles, domes, and long barrel shells
   (g) Suspended ceilings of combustible or noncombustible construction
   (h) Smooth monolithic ceilings with fire resistance less than that specified under item A.3.3.41.2(3)(d) and attached to the underside of wood joists, wood trusses, and bar joists

Combustible or noncombustible floor decks are permitted in the construction specified in A.3.3.41.2(3)(b) through A.3.3.41.2(3)(f). A.3.3.41.2(3)(b) would include standard mill construction.

In general, smooth ceiling construction, which is discussed in A.3.3.41.2(3), does not incorporate supporting members that are less than 7½ ft (2.3 m) on center or have members that would interfere with the distribution of water from sprinklers. The 7½ ft (2.3 m) length serves as a threshold value, the maximum distance at which a standard spray sprinkler can be placed from a wall for light hazard and ordinary hazard occupancies. In small rooms, standard spray sprinklers can be placed up to 9 ft (2.7 m) from one wall (see 10.2.5.2.3). Exhibit 3.7 illustrates smooth ceiling construction consisting of a suspended ceiling.

EXHIBIT 3.7 *Smooth, Flat, Horizontal Ceiling Construction Consisting of Suspended Ceiling. (Courtesy of American Fire Sprinkler Association)*

(4) *Standard Mill Construction*. The term *standard mill construction* as used in this standard refers to heavy timber construction as defined in NFPA 220.
(5) *Truss Construction (Wood or Steel)*. The term *truss construction* refers to parallel or pitched chord members connected by open web members supporting a roof or floor deck with top and bottom members not exceeding 4 in. (100 mm) in depth. *[See Figure A.3.3.41.2(c).]*

Wood truss construction, which is discussed in A.3.3.41.2(5), is similar to bar joist construction, except that the top and bottom chords typically are of a heavier wood construction, and the chords typically are connected by wood or steel web members rather than steel bars.

Exhibit 3.8 and Exhibit 3.9 illustrate different types of heavy timber construction.

EDUFIRE.IR

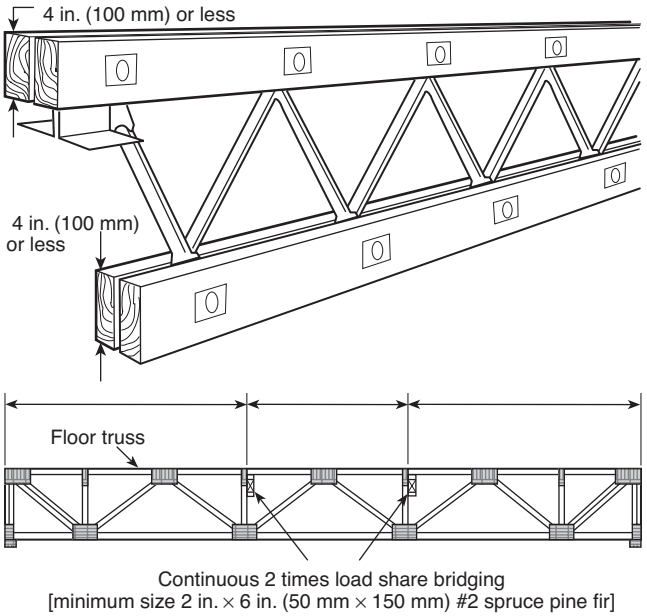

FIGURE A.3.3.41.2(c) *Examples of Wood Truss Construction.*

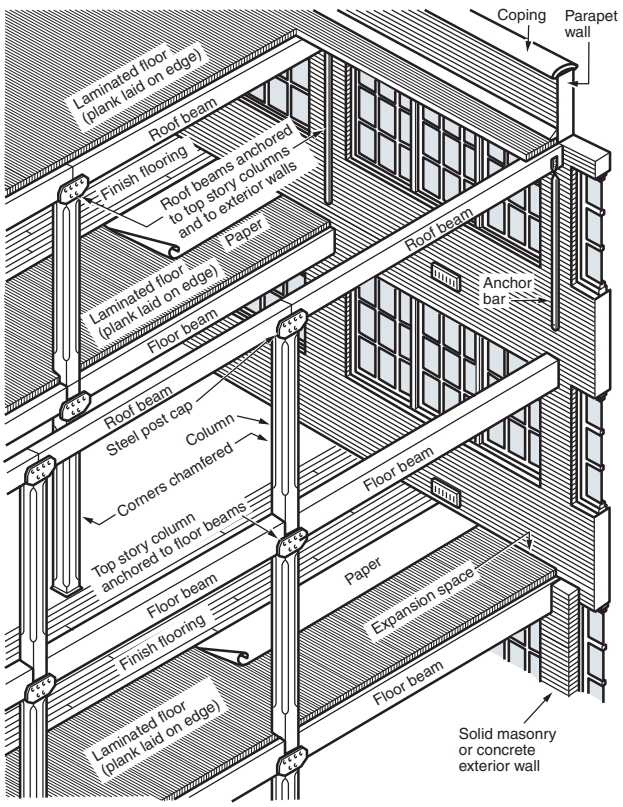

EXHIBIT 3.8 *Heavy Timber Construction of Laminated Floor and Beam Type. (Courtesy of the American Wood Council, Leesburg, VA)*

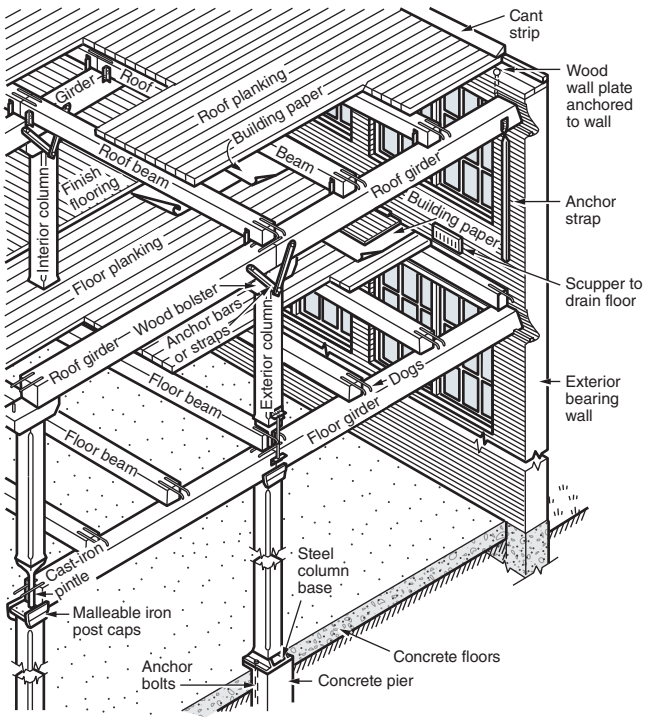

EXHIBIT 3.9 *Components of Heavy Timber Building That Shows Floor Framing with Components of Type Known as Semi-Mill Identified. (Courtesy of the American Wood Council, Leesburg, VA)*

EDUFIRE.IR

Unobstructed construction does not contain features that are expected to impede the flow of heat from a fire. Additionally, once the sprinklers have activated, the likelihood of their spray pattern being interrupted by construction features at or near the ceiling is greatly reduced.

3.3.42* Container (Shipping, Master, or Outer Container). A receptacle strong enough, by reason of material, design, and construction, to be shipped safely without further packaging.

A.3.3.42 Container (Shipping, Master, or Outer Container). The term *container* includes items such as cartons and wrappings. Fire-retardant containers or tote boxes do not by themselves create a need for automatic sprinklers unless coated with oil or grease. Containers can lose their fire-retardant properties if washed. For obvious reasons, they should not be exposed to rainfall.

3.3.43 Continuous Obstruction. See 3.3.133.1.

3.3.44 Control Mode Density/Area (CMDA) Sprinkler. See 3.3.205.4.1.

3.3.45 Control Mode Specific Application (CMSA) Sprinkler. See 3.3.205.4.2.

3.3.46* Control Valve. A valve controlling flow to water-based fire protection systems and devices.

Control valves typically are gate- or butterfly-type valves and are not automatic system valves such as deluge and preaction valves, as described in A.3.3.46.

A.3.3.46 Control Valve. Control valves do not include hose valves, inspector's test valves, drain valves, trim valves for dry pipe, preaction and deluge valves, check valves, or relief valves.

3.3.47 Conventional Pallet. See 3.3.147.1.

3.3.48 Core (Rolled Paper). The central tube around which paper is wound to form a roll.

3.3.49 Corrosion-Resistant Piping. Piping that has the property of being able to withstand deterioration of its surface or its properties when exposed to its environment. [**24,** 2019]

The term *corrosion-resistant piping,* while extracted from NFPA 24 in this context, can also apply to piping associated with aboveground systems and should not be limited to private fire service mains.

3.3.50 Corrosion-Resistant Sprinkler. See 3.3.205.4.3.

3.3.51 Corrosion-Retarding Material. A lining or coating material that when applied to piping or appurtenances has the property of reducing or slowing the deterioration of the object's surface or properties when exposed to its environment. [**24,** 2019]

The term *corrosion-retardant material*, while extracted from NFPA 24 in this context, can also apply to piping or appurtenances associated with aboveground systems and should not be limited to private fire service mains.

SEE ALSO

18.5.9.3 for additional information on C_p.

3.3.52 C_p. The seismic coefficient that combines ground motion and seismic response factors from ASCE/SEI 7-10, *Minimum Design Loads for Buildings and Other Structures*.

3.3.53 Cross Mains. The pipes supplying the branch lines, either directly or through riser nipples.

EDUFIRE.IR

3.3.54 Deluge Sprinkler System. See 3.3.206.3.

N **3.3.55 Distance Monitoring.** The monitoring of various conditions of a system or component from a location distant from the component through the use of electronic devices, meters, or equipment installed for the purpose.

3.3.56 Double-Row Racks. Racks less than or equal to 12 ft (3.7 m) in depth or single-row racks placed back to back having an aggregate depth up to 12 ft (3.7 m), with aisles having an aisle width of at least 3.5 ft (1.1 m) between loads on racks.

If the racks are less than or equal to 6 ft (1.8 m) in depth and separated on both sides by minimum 3½ ft (1.1 m) aisle widths, see the definition for *single-row racks*. For racks that do not meet the definition of single-row racks or double-row racks, see the definition of *multiple-row racks*.

3.3.57* Draft Curtain. A continuous material protruding downward from the ceiling to create a reservoir for collecting smoke and heat.

The definition of *draft curtain* clarifies that, for sprinkler system purposes, the intent or function is to bank heat or smoke. The definition correlates with NFPA 204, *Standard for Smoke and Heat Venting*. Although not explicitly addressed within NFPA 13, NFPA 204 requires the curtain to be constructed of rigid materials.

A.3.3.57 Draft Curtain. Additional information about the size and installation of draft curtains can be found in NFPA 204.

3.3.58 Drop-Out Ceiling. A suspended ceiling system, which is installed below the sprinklers, with listed translucent or opaque panels that are heat sensitive and fall from their setting when exposed to heat.

A drop-out ceiling allows the installation of a false ceiling beneath an existing sprinkler system. Drop-out ceilings provide an alternative to relocating sprinklers beneath a new ceiling.

Drop-out ceilings are evaluated to verify that they do not contribute to fire growth and that they do not significantly delay the operation of the sprinkler system. Once a drop-out ceiling is installed, the building owner must ensure that any ceiling panels replaced during the life of the system are of the same type originally installed. Currently, the listings for these ceilings limit the installation to standard-response sprinklers.

3.3.59 Dry Barrel Hydrant (Frostproof Hydrant). See 3.3.101.1.

3.3.60 Dry Pipe Sprinkler System. See 3.3.206.4.

3.3.61 Dry Sprinkler. See 3.3.205.4.4.

3.3.62 Dwelling Unit (for sprinkler system installations). One or more rooms arranged for the use of one or more individuals living together, as in a single housekeeping unit normally having cooking, living, sanitary, and sleeping facilities that include, but are not limited to, hotel rooms, dormitory rooms, apartments, condominiums, sleeping rooms in nursing homes, and similar living units.

A dwelling unit (see 9.2.4) is one of a series of connected rooms within a residential occupancy. Residential occupancies are identified in A.4.3.2 as light hazard. The residential classification encompasses all dwelling units included in the definition. The residential classification allows for the use of residential sprinklers. In addition, certain spaces within a dwelling unit are identified as being exempt from sprinkler coverage. NFPA 13 precisely defines those spaces in those specific types of residential occupancies, such as hotels, in which sprinkler coverage can be omitted.

EDUFIRE.IR

3.3.63 Early Suppression Fast-Response (ESFR) Sprinkler. See 3.3.205.4.5.

FAQ [3.3.64]

What is the difference between commodities that are encapsulated and commodities that are wrapped in plastic?

The chairs shown in Exhibit 3.10 are considered encapsulated, since the chairs are completely enclosed by the plastic sheet. The wrapped commodities in Exhibit 3.11 are not considered encapsulated, because the plastic does not cover the top of the pallet loads.

3.3.64* Encapsulation. A method of packaging that either consists of a plastic sheet completely enclosing the sides and top of a pallet load containing a combustible commodity, a combustible package, or a group of combustible commodities or combustible packages, or consists of combustible commodities individually wrapped in plastic sheeting and stored exposed in a pallet load.

A.3.3.64 Encapsulation. Totally noncombustible commodities on wood pallets enclosed only by a plastic sheet as described are not covered under this definition. Banding (i.e., stretch-wrapping around the sides only of a pallet load) is not considered to be encapsulation. Where there are holes or voids in the plastic or waterproof cover on the top of the carton that exceed more than half of the area of the cover, the term *encapsulated* does not apply. The term *encapsulated* does not apply to plastic-enclosed products or packages inside a large, nonplastic, enclosed container.

3.3.65 Expanded (Foamed or Cellular) Plastics. Those plastics, the density of which is reduced by the presence of numerous small cavities (cells), interconnecting or not, dispersed throughout their mass.

EXHIBIT 3.10 Encapsulated Chairs. (Courtesy of Telgian Corporation)

EXHIBIT 3.11 Commodities Wrapped in Plastic Sheet. (Courtesy of Telgian Corporation)

3.3.66 Exposed Group A Plastic Commodities. Those plastics not in packaging or coverings that absorb water or otherwise appreciably retard the burning hazard of the commodity. (Paper wrapped or encapsulated, or both, should be considered exposed.)

3.3.67 Extended Coverage Sprinkler. See 3.3.205.4.6.

3.3.68 Extension Fitting. A male by female adapter intended to be used with a sprinkler to adjust the final fit where the sprinkler is installed in a finished ceiling or wall.

Extension fittings, like the one shown in Exhibit 3.12, are common in system modifications and tenant improvement projects. There are specific requirements and limitations on their use and when friction loss through these fittings must be included. See 16.8.6.

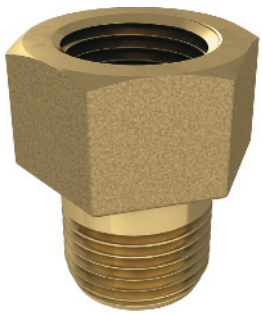

EXHIBIT 3.12 Extension Fitting. (Courtesy of Viking Group, Inc.)

EDUFIRE.IR

3.3.69 Extra Hazard (Group 1) (EH1). See 3.3.134.1.

3.3.70 Extra Hazard (Group 2) (EH2). See 3.3.134.2.

3.3.71* Face Sprinklers. Standard sprinklers that are located in transverse flue spaces along the aisle or in the rack, are within 18 in. (450 mm) of the aisle face of storage, and are used to oppose vertical development of fire on the external face of storage.

Face sprinklers must be located at transverse flues within racks. Face sprinklers are not effective if located outside the flue space, even if they are within 18 in. (450 mm) of the rack face. Exhibit 3.13 illustrates a face sprinkler that is not located directly in the transverse flue. Note the wood slat and pallet load just above the sprinkler.

NFPA 13 offers several in-rack sprinkler protection arrangements that do not include the installation of face sprinklers. For a fire that originates on the face of a storage rack, these in-rack sprinkler arrangements assume that the pallet loads in the storage racks will allow an acceptable amount of in-rack sprinkler discharge to run across the top of the pallet loads and down their vertical surfaces that are facing the aisle. In-rack sprinkler arrangements that incorporate the installation of face sprinklers should be considered where the pallet loads being maintained within storage racks can potentially obstruct or redirect in-rack sprinkler discharge from reaching the face of a storage rack.

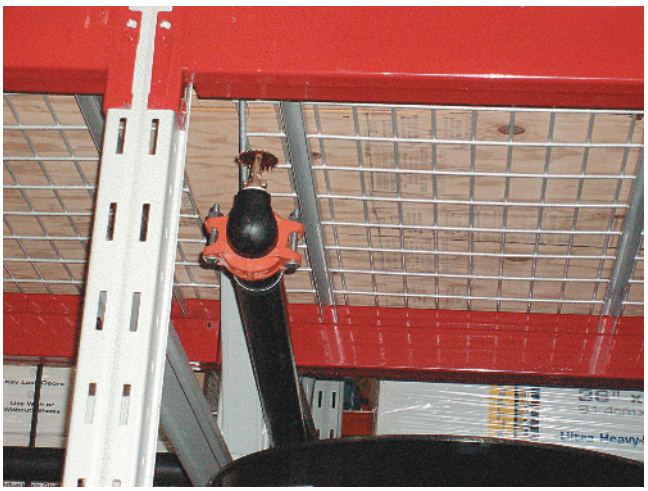

EXHIBIT 3.13 Face Sprinkler Not Properly Located Within Transverse Flue.

A.3.3.71 Face Sprinklers. All face sprinklers should be located within the rack structure. The flue spaces are generally created by the arrangement of the racks, and "walkways" should not be considered flue spaces.

3.3.72 Feed Mains. The pipes supplying cross mains, either directly or through risers.

3.3.73 Fire Control. Limiting the size of a fire by distribution of water so as to decrease the heat release rate and pre-wet adjacent combustibles, while controlling ceiling gas temperatures to avoid structural damage.

Since the inception of the first sprinkler system in the 1870s, the focus of most sprinkler systems has been to control a fire rather than to extinguish it. Although sprinkler systems have extinguished numerous fires, sprinkler systems generally are designed to limit the size of a developing fire and prevent it from growing and spreading beyond its general area of origin. In some cases, fires are shielded from sprinkler system discharge, which makes complete extinguishment difficult.

A sprinkler system's ability to extinguish or suppress a fire has not been widely discussed until fairly recently, because the interaction between sprinkler discharge and a fire had not been sufficiently understood. Phenomena associated with fire growth rates, mass loss of the burning fuel package, and rate of

EDUFIRE.IR

heat release produced by a fire need to be considered. Only within the past two decades have research efforts provided a greater understanding of these phenomena.

The result is the development of nontraditional sprinkler devices such as the control mode specific application (CMSA) sprinkler and the early suppression fast-response (ESFR) sprinkler.

3.3.74 Fire Department Connection. A connection through which the fire department can pump supplemental water into the sprinkler system, standpipe, or other water-based fire protection systems, furnishing water for fire extinguishment to supplement existing water supplies. [**24,** 2019]

Fire department connections were traditionally equipped with inlet sizes of 2½ in. (65 mm) for the connection of 2½ in. (65 mm) hose from the fire department pumper. Some fire department connections are now equipped with non-threaded connections in inlet sizes of 4 in. (100 mm) or 5 in. (125 mm). These non-threaded connections are intended to couple hoses of the appropriate size where the hose connections comply with NFPA 1963, *Standard for Fire Hose Connections*.

3.3.75 Fire Pump. A pump that is a provider of liquid flow and pressure dedicated to fire protection. [**20,** 2019]

3.3.76 Fire Suppression. Sharply reducing the heat release rate of a fire and preventing its regrowth by means of direct and sufficient application of water through the fire plume to the burning fuel surface.

The term *fire suppression* is qualitative in nature, because it does not specify to what extent — for example, 10 percent or 50 percent — the rate of heat release must be reduced in order to achieve suppression. The concept of fire suppression was fully realized in sprinkler system technology in the spring of 1988 when the first ESFR sprinkler was introduced.

A sprinkler can achieve a 100 percent reduction of the heat release rate, that is, complete extinguishment, of a free-burning cellulose material, such as wood, located in the center of a room if the fire, especially the area near the ignition, is not shielded from sprinkler discharge. In contrast, if a plasticized product stored 10 ft (3.0 m) high is burning with the ignition source near the floor, and the fire is partially shielded from the sprinkler because the material is stored on wood pallets, then a reduction in the heat release rate of less than 100 percent is more likely. The degree to which a fire is shielded from the sprinkler and its discharge is a key factor affecting a sprinkler system's ability to suppress a fire.

Exhibit 3.14 shows a simplified heat release rate curve and how it would be affected by a sprinkler system designed for fire control versus one designed for fire suppression. ESFR sprinklers are specifically designed to provide fire suppression.

EXHIBIT 3.14 *Simplified Fire Control/Fire Suppression Analogy.*

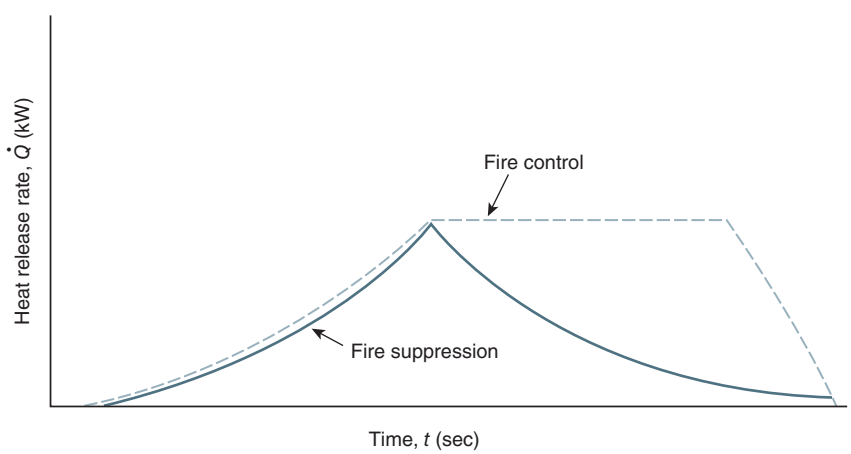

EDUFIRE.IR

3.3.77 Flat Ceiling. See 3.3.26.1.

3.3.78 Flexible Coupling. A listed coupling or fitting that allows axial displacement, rotation, and at least 1 degree of angular movement of the pipe without inducing harm on the pipe. For pipe diameters of 8 in. (200 mm) and larger, the angular movement is permitted to be less than 1 degree but not less than 0.5 degree.

As specified, flexible listed pipe coupling permits some angular movement of the pipe joint. The requirements in Section 18.2 describe piping configurations that use this angular movement to reduce the potential for pipe breakage and maintain system integrity during seismic events. These listed couplings are tested to determine compliance with the angular deflection specified in 3.3.78 and are specifically noted in the listings and installation instructions as flexible type.

3.3.79 Flow Hydrant. See 3.3.101.2.

3.3.80 Flow Test. A test performed by the flow and measurement of water from one hydrant and the static and residual pressures from an adjacent hydrant for the purpose of determining the available water supply at that location. [**24,** 2019]

3.3.81 Flush Sprinkler. See 3.3.205.3.2.

3.3.82 Flushing Test. A test of a piping system using flowrates intended to remove debris from the piping system prior to it being placed in service. [**24,** 2019]

3.3.83* Four-Way Bracing. Adjacent sway braces or a sway brace assembly intended to resist differential movement of the system piping in all horizontal directions.

A.3.3.83 Four-Way Bracing. A sway brace assembly could include a lateral and longitudinal brace in combination.

3.3.84 F_{pw}. The horizontal force due to seismic load acting on a brace at working stress levels.

SEE ALSO

18.5.9 for additional information on F_{pw}.

3.3.85 Free-Flowing Plastic Materials. Those plastics that fall out of their containers during a fire, fill flue spaces, and create a smothering effect on the fire. Examples include powder, pellets, flakes, or random-packed small objects [e.g., razor blade dispensers, 1 oz to 2 oz (28 g to 57 g) bottles].

3.3.86 Fuel-Fired Heating Unit. An appliance that produces heat by burning fuel.

3.3.87 General Sprinkler Characteristics. See 3.3.205.2.

3.3.88 Gridded Sprinkler System. See 3.3.206.5.

3.3.89 Hanger. A device or assembly used to support the gravity load of the system piping.

3.3.90 Heat-Sensitive Material. See 3.3.119.4.

3.3.91 Heel. See 3.3.119.5.

3.3.92 Heel Angle. See 3.3.119.6.

3.3.93 High Volume Low Speed Fan. A ceiling fan that is approximately 6 ft (1.8 m) to 24 ft (7.3 m) in diameter with a rotational speed of approximately 30 to 70 revolutions per minute.

3.3.94 High-Challenge Fire Hazard. A fire hazard typical of that produced by fires in combustible high-piled storage.

The occupancy hazard descriptions given in 4.3.2 through 4.3.6 are a means of categorizing the types of fires that can be protected by sprinkler systems installed in accordance with the occupancy hazard

EDUFIRE.IR

requirements of NFPA 13. To a large degree, occupancy hazard classification depends on the function of the space. Occupancy hazards have been the basis for the sprinkler design criteria found in NFPA 13 since 1947. Paragraphs 4.3.1.1 through 4.3.1.3 provide additional information on occupancy hazard classifications.

Since about 1947, the quantity and arrangement of materials stored in buildings have changed dramatically. For example, warehouses that accommodate 70 ft (21.3 m) high rack storage now exist, as do warehouse-type spaces used for bulk retail operations. These buildings can contain a wide range and a large quantity of commodities, such as plastics, flammable liquids, aerosols, and automobile tires. These kinds of facilities often create fire hazards that exceed the hazards characterized by the occupancy hazard descriptions.

SEE ALSO

Chapters 20 through 26 for additional information on protection of storage.

Rather than categorizing the associated fire hazards in storage facilities according to the occupancy hazard approach, the hazards are categorized according to the types of commodities stored. With regard to hazards presented by other commodities, processes, or occupancies, the appropriate sprinkler system information is now either cited or referenced in NFPA 13. For example, where aerosols are stored, 26.3.1 references NFPA 30B, *Code for the Manufacture and Storage of Aerosol Products*.

Unless specifically stated to the contrary, regulations governing specific installation requirements and information pertaining to hydraulic calculations are the same for systems protecting a high-challenge fire hazard, as defined in 3.3.94, as they are for light, ordinary, and extra hazard occupancies. For example, rules for positioning sprinklers, techniques for hydraulic calculations, selection of appropriate pipe materials, and requirements for determining the coverage area for a sprinkler are the same.

The term *high challenge* implies that provisions in excess of those required for light, ordinary, and extra hazard occupancies are necessary to achieve fire control or fire suppression. An additional provision could include the need for higher sprinkler discharge densities, a larger design area, or the installation of additional devices or components.

3.3.95 High-Piled Storage. Solid-piled, palletized, rack storage, bin box, and shelf storage in excess of 12 ft (3.7 m) in height.

Storage heights exceeding 12 ft (3.7 m) are considered high-piled storage by NFPA 13. See Section 20.4 to determine the appropriate commodity classification to be used for the relevant sprinkler system criteria. Exhibit 3.15 illustrates an example of high-piled storage consisting of on-floor, palletized, and future rack storage.

EXHIBIT 3.15 *Example of High-Piled Storage. (Courtesy of Telgian Corporation)*

3.3.96 Horizontal Barrier. A solid barrier in the horizontal position covering the rack at certain height increments to prevent vertical fire spread.

In the same manner that a building's ceiling captures heat from a fire and directs it to the nearest ceiling-level sprinklers, a horizontal barrier within a storage rack acts as a ceiling for in-rack sprinklers. The purpose

EDUFIRE.IR

of the horizontal barrier is to trap the heat from a fire underneath it and funnel it to the nearest in-rack sprinklers so they can operate in a timely fashion and provide fire control. To achieve this goal, it is important that the horizontal barrier cover most of the horizontal surfaces of the storage rack at the tier level where the barrier is being installed.

NFPA 13 offers several different in-rack sprinkler protection options that incorporate the use of horizontal barriers. Some of these protection options are designed to prevent the fire from traveling vertically past the barriers and some are not. It is important to review each in-rack sprinkler design that uses horizontal barriers carefully to make sure it is clear where gaps in the barriers are allowed and how wide they can be.

Note that when compared to the number of in-rack sprinklers required in storage racks void of horizontal barriers, the installation of horizontal barriers typically will reduce the number of in-rack sprinklers required at the tier levels where sprinklers are needed. However, they generally will not affect the vertical location at which in-rack sprinklers are required.

3.3.97 Horizontal Ceiling. See 3.3.26.2.

3.3.98 Horizontal Channel. Any uninterrupted space in excess of 5 ft (1.5 m) in length between horizontal layers of stored tires. Such channels can be formed by pallets, shelving, racks, or other storage arrangements.

3.3.99 Horizontal Roll Paper Storage. See 3.3.182.2.

3.3.100 Hose House. An enclosure located over or adjacent to a hydrant or other water supply designed to contain the necessary hose nozzles, hose wrenches, gaskets, and spanners to be used in fire fighting in conjunction with and to provide aid to the local fire department. [**24,** 2019]

3.3.101 Hydrant. An exterior valved connection to a water supply system that provides hose connections. [**24,** 2019]

3.3.101.1 Dry Barrel Hydrant (Frostproof Hydrant). A type of hydrant with the main control valve below the frost line between the footpiece and the barrel. [**24,** 2019]

3.3.101.2 Flow Hydrant. The hydrant that is used for the flow and flow measurement of water during a flow test. [**24,** 2019]

3.3.101.3 Private Fire Hydrant. A valved connection on a water supply system having one or more outlets and that is used to supply hose and fire department pumpers with water on private property. [**24,** 2019]

3.3.101.4 Public Hydrant. A valved connection on a water supply system having one or more outlets and that is used to supply hose and fire department pumpers with water. [**24,** 2019]

3.3.101.5 Residual Hydrant. The hydrant that is used for measuring static and residual pressures during a flow test. [**24,** 2019]

3.3.101.6 Wet Barrel Hydrant. A type of hydrant that is intended for use where there is no danger of freezing weather, where each outlet is provided with a valve and an outlet. [**24,** 2019]

3.3.102 Hydrant Butt. The hose connection outlet of a hydrant. [**24,** 2019]

3.3.103 Hydraulically Calculated Water Demand Flow Rate. The waterflow rate for a system or hose stream that has been calculated using accepted engineering practices. [**24,** 2019]

3.3.104 Hydraulically Designed System. A calculated sprinkler system in which pipe sizes are selected on a pressure loss basis to provide a prescribed water density, in gallons per minute per square foot (mm/min), or a prescribed minimum discharge pressure or flow per sprinkler, distributed with a reasonable degree of uniformity over a specified area.

EDUFIRE.IR

FAQ [3.3.104]

Does NFPA 13 require a safety factor for the water supply?

NFPA 13 does not require a safety factor to be applied to either the water supply or the system demand. A safety factor ensures that more water than required is available. The use of a safety factor is considered good practice but is not required. Although NFPA 13 does not specifically require the application of safety factors in any part of a sprinkler system design or installation, safety factors are implicitly imbedded in many of the document's requirements. However, when comparing the system demand to the available water supply, the designer should determine the reasonable worst-case available supply.

A sprinkler system designed using hydraulic analysis is preferable to those systems designed using a pipe schedule approach. Hydraulic designs provide for a more accurate analysis of the piping system and allow for the selection of the most suitable pipe sizes. A hydraulic analysis also provides data to demonstrate that the water supply is adequate for the sprinkler system demand. The availability of an increasing number of product-specific sprinkler system components all but necessitates the hydraulic design of sprinkler systems.

A hydraulic analysis determines the sprinkler system's demand and the necessary water supply. An acceptable system is one in which the system's demand is less than the available water supply. The results of hydraulic analysis are often presented in graphical form. Graphical representation of the hydraulic analysis provides easier review and evaluation. The graph usually contains two curves — one that represents the system demand and another that represents the available water supply. Figure A.27.4.2(d) illustrates this graphical representation. Where fire pumps or other equipment supplement the available water supply, their effect on the water supply also must be presented graphically, resulting in additional curves on the graph.

An important note about fire pumps is that they do not create additional water capacity but rather boost the pressure and flow of an existing water supply. For example, if a fire pump is connected to a municipal water supply, the fire pump cannot create a larger quantity of water than what exists in the municipal supply. Instead, the fire pump will boost the pressure from the municipal supply so that additional flow is available. The function of the fire pump is to raise the water supply curve in terms of pressure and flow so that it exceeds the sprinkler system demand. This is achieved by adding the fire pump curve to the water supply curve for the water main as shown in Exhibit 3.16.

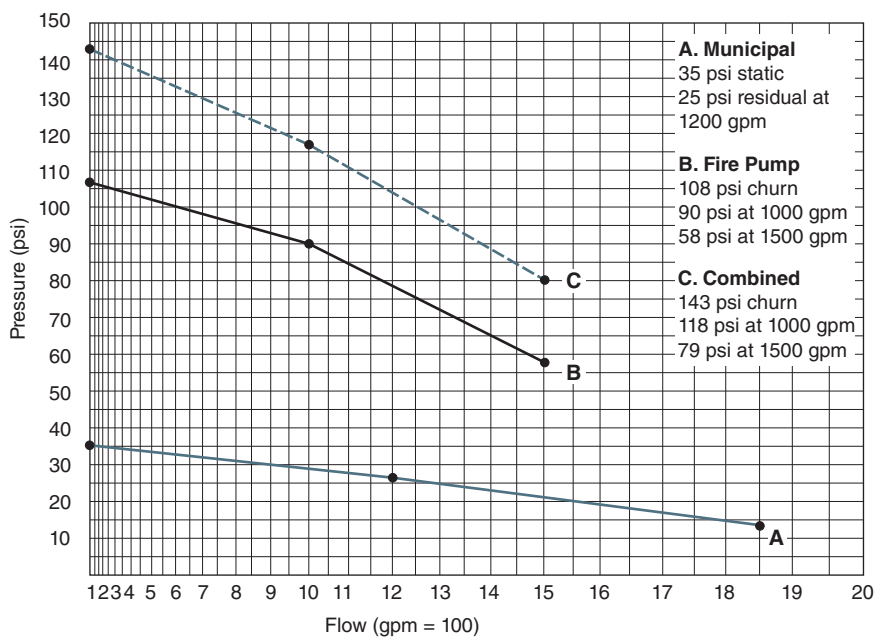

For SI units, 1 gpm = 3.785 L/min; 1 psi = 0.0689 bar.

EXHIBIT 3.16 *Fire Pump and Water Supply Performance.*

3.3.105 Hydrostatic Test. A test of a closed piping system and its attached appurtenances consisting of subjecting the piping to an increased internal pressure for a specified period of duration to verify system integrity and leak rates. [**24,** 2019]

EDUFIRE.IR

3.3.106* Indicating Valve. A valve that has components that provide the valve operating position, open or closed. [**24,** 2019]

A.3.3.106 Indicating Valve. Examples are outside screw and yoke (OS&Y) gate valves, butterfly valves, and underground gate valves with indicator posts.

3.3.107 Installation Orientation. See 3.3.205.3.

3.3.108 Institutional Sprinkler. See 3.3.205.4.7.

3.3.109 Intermediate-Level Sprinkler/Rack Storage Sprinkler. See 3.3.205.4.8.

3.3.110 International Shore Connection. See 3.3.119.7.

3.3.111 Laced Tire Storage. Tires stored where the sides of the tires overlap, creating a woven or laced appearance. *[See Figure A.3.3.185(g).]*

3.3.112 Lateral Brace. A sway brace intended to resist differential movement perpendicular to the axis of the system piping.

3.3.113 Light Hazard. See 3.3.134.3.

3.3.114* Limited-Combustible (Material). See Section 4.10.

A.3.3.114 Limited-Combustible (Material). Material subject to increase in combustibility or flame spread index beyond the limits herein established through the effects of age, moisture, or other atmospheric condition is considered combustible. See NFPA 259 and NFPA 220.

3.3.115 Longitudinal Brace. A sway brace intended to resist differential movement parallel to the axis of the system piping.

3.3.116* Longitudinal Flue Space. The space between rows of storage perpendicular to the direction of loading with a width not exceeding 24 in. (600 mm) between storage.

NFPA 13 defines the minimum width of a longitudinal flue space as 6 in. (150 mm) and the maximum width as 24 in. (600 mm). The minimum width of 6 in. (150 mm) is intended to promote the heat from a fire venting vertically, as opposed to travelling horizontally. This in turn allows sprinklers to operate as quickly as possible, as well as reduces the potential of horizontal fire spread. The maximum width of 24 in. (600 mm) comes into play only when in-rack sprinkler protection is needed within the longitudinal flue space. The intent of this maximum width is to help ensure that the in-rack sprinklers are installed in a space that will (1) allow for a prompt response during a fire event and (2) help ensure the in-rack sprinkler discharge can reach the top of storage at the tier level the sprinklers are installed.

If in-rack sprinklers are required within the longitudinal flue space of a double-row rack and the distance between the storage racks is greater than 24 in. (600 mm), then this space cannot be used for the placement of in-rack sprinklers. Instead, the in-rack sprinklers must be located within the footprint of the storage rack, similar to the requirements of a single-row rack.

It should be noted that most full-scale fire tests conducted at the testing labs are conducted with 6 in. (150 mm) wide longitudinal flue spaces. As a result, testing conducted with in-rack sprinklers installed in the longitudinal flue space have the in-rack sprinklers located only 3 in. (75 mm) horizontally away from the nearest pallet load. As a result, a minimum vertical clearance of 6 in. (150 mm) between the top of storage and the in-rack sprinkler deflector allows for direct sprinkler discharge to the top of the pallet load, thus allowing for water discharge, in theory, to all vertical surfaces of the pallet load. As the longitudinal flue space becomes wider, less sprinkler discharge will reach the top of the pallet loads if the vertical clearance is not changed. Therefore, if in-rack sprinklers are required within the longitudinal flue space of a double-row rack, consideration should be given to providing as much vertical clearance between the top of storage and the in-rack sprinkler deflector as possible when the width of the longitudinal flue space exceeds 6 in. (150 mm).

EDUFIRE.IR

A.3.3.116 Longitudinal Flue Space. See Figure A.3.3.116.

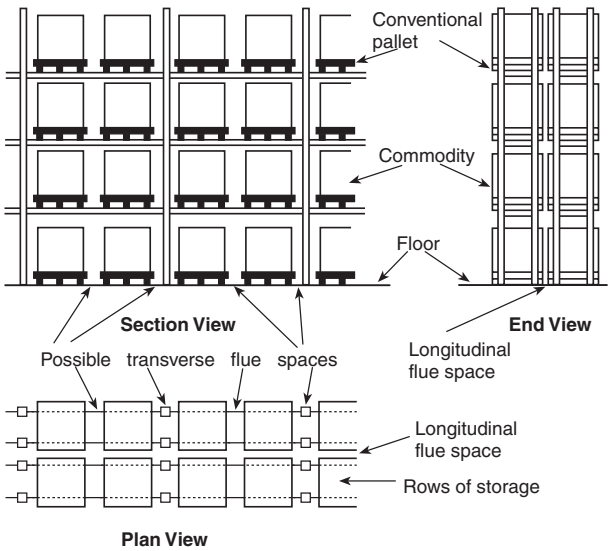

FIGURE A.3.3.116 *Typical Double-Row (Back-to-Back) Rack Arrangement.*

3.3.117 Looped Sprinkler System. See 3.3.206.6.

3.3.118* Low-Piled Storage. Solid-piled, palletized, rack storage, bin box, and shelf storage up to 12 ft (3.7 m) in height.

A.3.3.118 Low-Piled Storage. This definition is not intended to address allowable design approaches and protection schemes.

3.3.119 Marine Definitions. These definitions apply to Chapter 30 only.

3.3.119.1 A-Class Boundary. A boundary designed to resist the passage of smoke and flame for 1 hour when tested in accordance with ASTM E119, *Standard Test Methods for Fire Tests of Building Construction and Materials*, or UL 263, *Standard for Fire Tests of Building Construction and Materials*.

3.3.119.2 B-Class Boundary. A boundary designed to resist the passage of flame for ½ hour when tested in accordance with ASTM E119, *Standard Test Methods for Fire Tests of Building Construction and Materials*, or UL 263, *Standard for Fire Tests of Building Construction and Materials*.

3.3.119.3 Central Safety Station. A continuously manned control station from which all of the fire control equipment is monitored. If this station is not the bridge, direct communication with the bridge must be provided by means other than the ship's service telephone.

A central safety station, which is defined in 3.3.119.3, is typically the bridge.

3.3.119.4* Heat-Sensitive Material. A material whose melting point is below 1700°F (927°C).

Ships are highly compartmentalized by passive fire barrier systems, such as bulkheads (walls) and decks (floors). Overall, shipboard fire protection places a greater emphasis on passive fire safety systems than on active fire suppression systems, such as automatic sprinklers. An assembly that is not expected to withstand fire exposure for 1 hour in accordance with the time–temperature profile of ASTM E119, *Standard*

EDUFIRE.IR

Test Methods for Fire Tests of Building Construction and Materials, is considered heat sensitive. The fire endurance of materials, such as piping, that penetrate fire barriers on ships must be tested dry so that a failure of the sprinkler system would not cause a failure of the passive system.

A.3.3.119.4 Heat-Sensitive Material. The backbone of the fire protection philosophy for U.S. flagged vessels and passenger vessels that trade internationally is limiting a fire to the compartment of origin by passive means. Materials that do not withstand a 1-hour fire exposure when tested in accordance with ASTM E119, *Standard Test Methods for Fire Tests of Building Construction and Materials,* or ANSI/UL 263, *Fire Tests of Building Construction Materials*, are considered "heat sensitive."

3.3.119.5 Heel. The inclination of a ship to one side.

3.3.119.6 Heel Angle. The angle defined by the intersection of a vertical line through the center of a vessel and a line perpendicular to the surface of the water.

Exhibit 3.17 illustrates measurement of the heel angle, which is defined in 3.3.119.6.

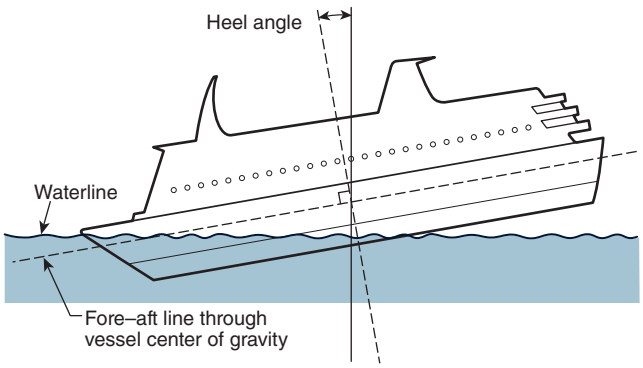

EXHIBIT 3.17 *Measurement of Heel Angle. (Courtesy of Morgan Hurley)*

3.3.119.7* International Shore Connection. A universal connection to the vessel's fire main to which a shoreside fire-fighting water supply can be connected.

A.3.3.119.7 International Shore Connection. See Figure A.3.3.119.7.

3.3.119.8* Marine System. A sprinkler system installed on a ship, boat, or other floating structure that takes its supply from the water on which the vessel floats.

A.3.3.119.8 Marine System. Some types of sprinkler systems can closely resemble marine systems, such as a system installed on a floating structure that has a permanent water supply connection to a public main. For these types of systems, judgment should be used in determining if certain aspects of Chapter 26 are applicable.

3.3.119.9* Marine Thermal Barrier. An assembly that is constructed of noncombustible materials and made intact with the main structure of the vessel, such as shell, structural bulkheads, and decks; meets the requirements of a B-Class boundary; and is insulated such that, if tested in accordance with ASTM E119, *Standard Test Methods for Fire Tests of Building Construction and Materials,* or UL 263, *Standard for Fire Tests of Building Construction and Materials,* for 15 minutes, the average temperature of the unexposed side does not rise more than 250°F (121°C) above the original temperature, nor does the temperature at any one point, including any joint, rise more than 405°F (207°C) above the original temperature.

FAQ [3.3.119.7]

Do the requirements of Chapter 30 apply to floating structures, such as restaurants and casinos, which are either mobile or permanently moored?

Although originally intended only for application to ships, other types of waterborne structures were recognized to more closely resemble ships than buildings. Examples include restaurants and casinos that are built on permanently moored barges. Where a sprinkler system on a floating structure takes its water supply from the water on which the structure floats, as opposed to from a permanent water main, the sprinkler system must comply with Chapter 30.

EDUFIRE.IR

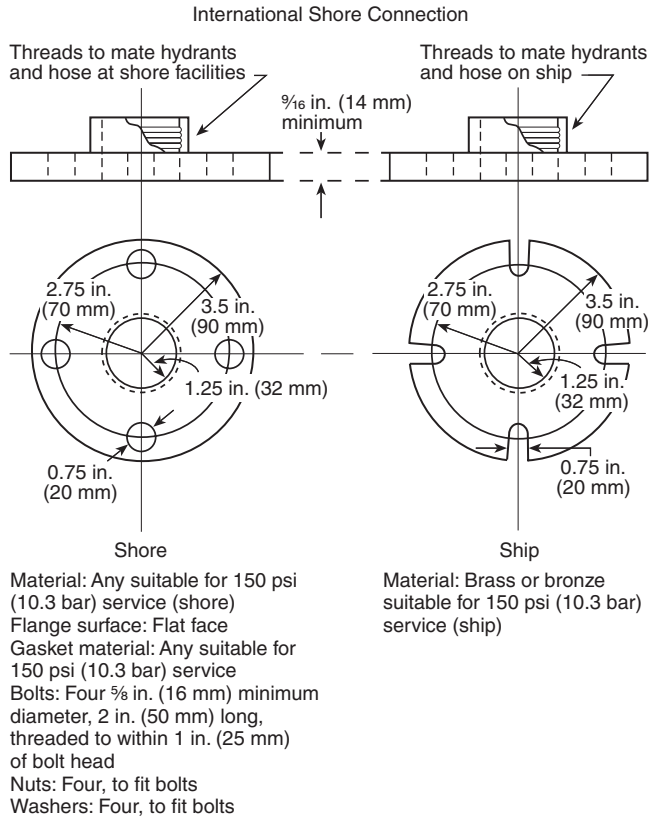

FIGURE A.3.3.119.7 *International Shore Fire Connection.*

A.3.3.119.9 Marine Thermal Barrier. A marine thermal barrier is typically referred to as a B-15 boundary.

3.3.119.10 Marine Water Supply. The supply portion of the sprinkler system from the water pressure tank or the sea suction of the designated sprinkler system pump up to and including the valve that isolates the sprinkler system from these two water sources.

3.3.119.11 Supervision. A visual and audible alarm signal given at the central safety station to indicate when the system is in operation or when a condition that would impair the satisfactory operation of the system exists. Supervisory alarms must give a distinct indication for each individual system component that is monitored.

3.3.119.12 Survival Angle. The maximum angle to which a vessel is permitted to heel after the assumed damage required by stability regulations is imposed.

The survival angle for a ship is typically calculated when the ship is designed. A sprinkler designer would likely need to consult with a vessel's representative, such as the captain or a naval architect, to determine the survival angle. The sprinkler system equipment is selected to remain functional at this angle of inclination.

3.3.119.13 Type 1 Stair. A fully enclosed stair that serves all levels of a vessel in which persons can be employed.

3.3.120 Marine System. See 3.3.119.8.

EDUFIRE.IR

3.3.121 Marine Thermal Barrier. See 3.3.119.9.

3.3.122 Marine Water Supply. See 3.3.119.10.

3.3.123* Miscellaneous Storage. Storage that does not exceed 12 ft (3.66 m) in height, is incidental to another occupancy use group, does not constitute more than 10 percent of the building area or 4000 ft^2 (370 m^2) of the sprinklered area, whichever is greater, does not exceed 1000 ft^2 (93 m^2) in one pile or area, and is separated from other storage areas by at least 25 ft (7.62 m).

The miscellaneous storage concept applies to a building in which storage constitutes only a part of the building's use, such as the back room of a mercantile facility. Limitations are imposed on the amount and the arrangement of storage that are permitted. The requirements for the protection of miscellaneous storage, as defined in 3.3.123, are contained in Section 4.3.

The concept of miscellaneous storage was developed to address those situations where only a relatively small portion of a building is used for storage and where such storage does not exceed 12 ft (3.7 m) in height. One example is a manufacturing operation that uses a portion of its facility to store small amounts of finished product and raw materials. As with most facilities, the fire hazard associated with the storage is likely to differ from that of the manufacturing operation. Prior editions of NFPA 13 addressed storage only if it was considered miscellaneous.

The 10 percent limit in 3.3.123 is taken from certain accessory use definitions, as found in the model building codes. The 4000 ft^2 (370 m^2) limit is derived by taking 10 percent of the maximum allowable area of coverage for a sprinkler system riser protecting high-piled storage. See Section 4.5 for system protection area limitations.

A.3.3.123 Miscellaneous Storage. The sprinkler system design criteria for miscellaneous storage at heights below 12 ft (3.7 m) are covered by this standard in Chapter 13. Chapter 13 describes design criteria, and Section 4.5 describes installation requirements (area limits). These requirements apply to all storage of 12 ft (3.7 m) or less in height.

3.3.124* Miscellaneous Tire Storage. The storage of rubber tires that is incidental to the main use of the building; storage areas do not exceed 2000 ft^2 (186 m^2), and on-tread storage piles, regardless of storage method, do not exceed 25 ft (7.6 m) in the direction of the wheel holes. Acceptable storage arrangements include (a) on-floor, on-side storage up to 12 ft (3.7 m) high; (b) on-floor, on-tread storage up to 5 ft (1.5 m) high; (c) double-row or multirow fixed or portable rack storage on-side or on-tread up to 5 ft (1.5 m) high; (d) single-row fixed or portable rack storage on-side or on-tread up to 12 ft (3.7 m) high; and (e) laced tires in racks up to 5 ft (1.5 m) in height.

A.3.3.124 Miscellaneous Tire Storage. The limitations on the type and size of storage are intended to identify those situations where tire storage is present in limited quantities and incidental to the main use of the building. Occupancies such as aircraft hangars, automobile dealers, repair garages, retail storage facilities, automotive and truck assembly plants, and mobile home assembly plants are types of facilities where miscellaneous storage could be present.

3.3.125 Movable Racks. Racks on fixed rails or guides that can be moved back and forth only in a horizontal, two-dimensional plane. A moving aisle is created as abutting racks are either loaded or unloaded, then moved across the aisle to abut other racks.

3.3.126 Multicycle System. See 3.3.206.7.

3.3.127 Multiple-Row Racks. Racks greater than 12 ft (3.7 m) in depth or single- or double-row racks separated by aisles less than 3.5 ft (1.1 m) wide having an overall width greater than 12 ft (3.7 m).

3.3.128 Net Vertical Force. The vertical reaction due to the angle of installation of sway braces on system piping resulting from earthquake motion.

SEE ALSO

18.5.9 for additional information on S_s and seismic loads.

EDUFIRE.IR

3.3.129 Noncombustible Material. See Section 4.10.

3.3.130 Noncontinuous Obstruction. See 3.3.133.2.

3.3.131 Nozzles. See 3.3.205.4.9.

3.3.132 Obstructed Construction. See 3.3.41.1.

3.3.133 Obstruction.

3.3.133.1 Continuous Obstruction. An obstruction located at or below the level of sprinkler deflectors that affect the discharge pattern of two or more adjacent sprinklers.

3.3.133.2 Noncontinuous Obstruction. An obstruction at or below the level of the sprinkler deflector that affects the discharge pattern of a single sprinkler.

The terms *continuous obstruction* and *noncontinuous obstruction* are used throughout 9.5.5. Guidance is provided throughout Chapters 10 through 15 on how to locate various types of sprinklers in regard to such obstructions.

Definitions for *continuous obstruction* and *noncontinuous obstruction* were added to the 2013 edition to clarify the intent as it relates to sprinkler spacing and location. In assigning whether a configuration is a continuous obstruction, it is not the individual obstructing component but rather the impact on adjacent sprinklers that is the determining factor. For instance, a run of hanging lights that has a 24 in. (600 mm) gap between light fixtures would affect the discharge of adjacent sprinklers, presenting a continuous obstruction similar to that of a solid duct.

3.3.134 Occupancies.

3.3.134.1 Extra Hazard (Group 1) (EH1). Occupancies or portions of other occupancies where the quantity and combustibility of contents are very high and dust, lint, or other materials are present, introducing the probability of rapidly developing fires with high rates of heat release but with little or no combustible or flammable liquids.

3.3.134.2 Extra Hazard (Group 2) (EH2). Occupancies or portions of other occupancies with moderate to substantial amounts of flammable or combustible liquids or occupancies where shielding of combustibles is extensive.

3.3.134.3 Light Hazard Occupancies. Occupancies or portions of other occupancies where the quantity and/or combustibility of contents is low and fires with relatively low rates of heat release are expected.

3.3.134.4 Ordinary Hazard (Group 1) (OH1). Occupancies or portions of other occupancies where the quantity and combustibility of the contents does not exceed the amount of miscellaneous storage of Class 2, 3, 4, plastics, tires, and roll paper provided in Table 4.3.1.7.1.

3.3.134.5 Ordinary Hazard (Group 2) (OH2). Occupancies or portions of other occupancies where the quantity and combustibility of contents are moderate to high, stockpiles of contents with moderate rates of heat release do not exceed 12 ft (3.66 m), and stockpiles of contents with high rates of heat release do not exceed 8 ft (2.4 m).

3.3.135 Old-Style/Conventional Sprinkler. See 3.3.205.4.10.

3.3.136 On-Side Tire Storage. Tires stored horizontally or flat.

An example of on-side tire storage on portable racks is shown in Exhibit 3.18.

EDUFIRE.IR

EXHIBIT 3.18 On-Side Tire Storage on Portable Racks. (Courtesy of Ford Motor Company)

3.3.137 On-Tread Tire Storage. Tires stored vertically or on their treads.

Exhibit 3.19 shows an example of on-tread tire storage on racks.

EXHIBIT 3.19 On-Tread Tire Storage on Racks.

3.3.138 Open Array (Palletized, Solid-Piled, Bin Box, and Shelf Storage). See 3.3.8.3.

3.3.139 Open Array (Rolled Paper). See 3.3.8.4.

3.3.140 Open Rack. Racks without shelving or with shelving in racks that are fixed in place with shelves having a solid surface and a shelf area equal to or less than 20 ft^2 (1.9 m^2) or with shelves having a wire mesh, slatted surface, or other material with openings representing at least 50 percent of the shelf area including the horizontal area of rack members and where the flue spaces are maintained.

It is important to understand that a storage rack can be void of solid shelving and still not meet the requirements of an open rack. This is due to the wording in the definition that states, "where the flue spaces are

EDUFIRE.IR

maintained." This means that, unless indicated otherwise in NFPA 13, a minimum 6 in. (150 mm) wide flue space is needed between pallet loads, depending on the commodity hazard and the height of storage. Therefore, it is important to determine if the material handling procedures set in place will provide the flue space requirements needed to qualify the storage rack as an open rack. If sprinkler protection is installed based on an open rack and adequate flue spaces are not provided due to material handling, it is quite possible that fire control might not be achieved due to excessive horizontal fire spread.

3.3.141 Open Sprinkler. See 3.3.205.4.11.

3.3.142* Open-Top Container. A container of any shape that is entirely or partially open on the top and arranged so as to allow for the collection of discharging sprinkler water cascading through the storage array.

A.3.3.142 Open-Top Container. Open-top containers can prevent water from running across the top to storage and down the flues and can also collect water. The container will prevent water penetration to a fire in lower levels where it is needed. Rack or flue collapse can also occur if too much water is collected. Consideration should be given to the potential degree of water collection possible within the container when applying the definition of an open-top container. The following conditions should be considered:

(1) Small openings at the top of containers containing such items as fresh produce are quite common and should not be considered as an open-top container.
(2) Arrangements that include open-top containers that are all located on the bottom tier of rack storage do not prevent penetration of water and should not be considered an open-top container.
(3) Containers having either wire mesh siding or large uniform openings along the bottom perimeter of each container, such that water enters the container at the same flow rate and discharge evenly into the flue spaces should not be considered as an open-top container provided the contents of the container are not water absorbent and are not capable of blocking such container openings.
(4) Open-top containers that are stored in fixed location on racks equipped with flat or domed-shaped fixed-in-place lids that are provided directly above the open-top containers and prevent water from entering the open-top container, as well as distribute water equally into all flue spaces should not be considered an open-top container.

3.3.143 Ordinary Hazard (Group 1) (OH1). See 3.3.134.4.

3.3.144 Ordinary Hazard (Group 2) (OH2). See 3.3.134.5.

3.3.145 Ornamental/Decorative Sprinkler. See 3.3.205.4.12.

3.3.146 Packaging. A commodity wrapping, cushioning, or container.

N **3.3.147 Pallet.**

3.3.147.1* Conventional Pallets. A material-handling aid designed to support a unit load with openings to provide access for material-handling devices. *(See Figure A.3.3.147.1.)*

A.3.3.147.1 Conventional Pallets. See Figure A.3.3.147.1.

3.3.147.2 Plastic Pallet. A pallet having any portion of its construction consisting of a plastic material.

3.3.147.3* Reinforced Plastic Pallet. A plastic pallet incorporating a secondary reinforcing material (such as steel or fiberglass) within the pallet.

Exhibit 3.20 and Exhibit 3.21 show examples of reinforced and nonreinforced plastic pallets. The pallets shown in the exhibits are four-way pallets.

EDUFIRE.IR

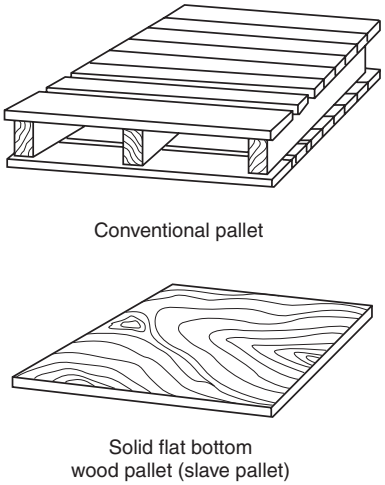

FIGURE A.3.3.147.1 Typical Pallets.

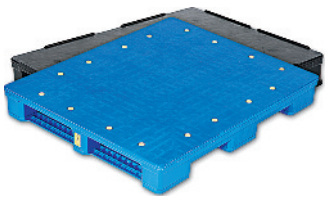

EXHIBIT 3.20 Reinforced 40 in. × 48 in. (1015 mm × 1220 mm) Solid Deck Plastic Pallet. (Courtesy of ORBIS Corporation)

EXHIBIT 3.21 Repairable Nonreinforced 40 in. × 48 in. (1015 mm × 1220 mm) Plastic Pallet. (Courtesy of ORBIS Corporation)

A.3.3.147.3 Reinforced Plastic Pallet. See Figure A.3.3.147.3(a) and Figure A.3.3.147.3(b).

3.3.147.4 Slave Pallet. A special pallet captive to a material-handling system. *(See Figure A.3.3.147.1.)*

3.3.147.5 Wood Pallet. A pallet constructed entirely of wood with metal fasteners.

3.3.148 Palletized Storage. Storage of commodities on pallets or other storage aids that form horizontal spaces between tiers of storage.

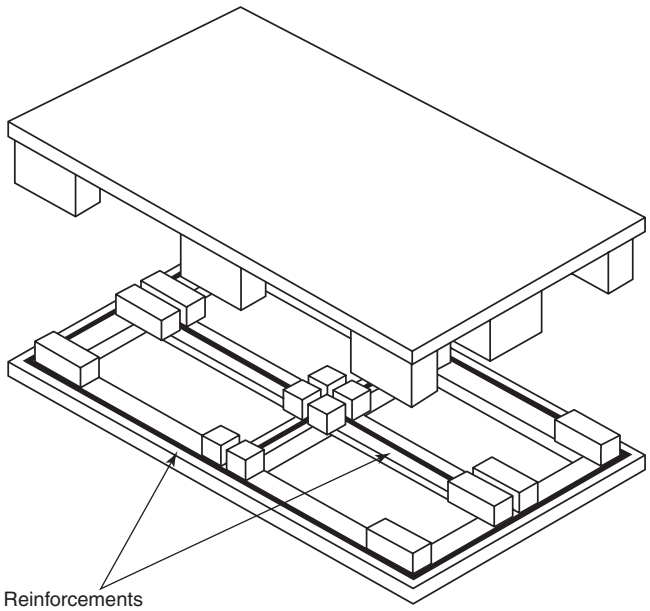

FIGURE A.3.3.147.3(a) Cut-Away Reinforced Plastic Pallet.

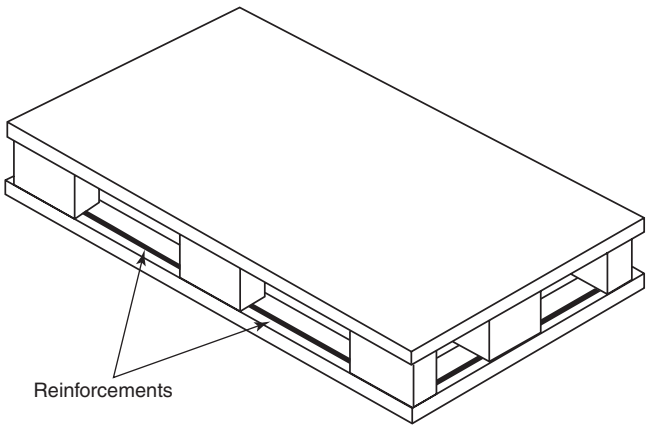

FIGURE A.3.3.147.3(b) Assembled Reinforced Plastic Pallet.

EDUFIRE.IR

3.3.149 Palletized Tire Storage. Storage on portable racks of various types utilizing a conventional pallet as a base.

3.3.150 Paper (General Term). The term for all kinds of felted sheets made from natural fibrous materials, usually vegetable but sometimes mineral or animal, and formed on a fine wire screen from water suspension.

3.3.151 Pendent Sprinkler. See 3.3.205.3.3.

3.3.152* Pile Stability, Stable Piles. Those arrays where collapse, spillage of content, or leaning of stacks across flue spaces is not likely to occur soon after initial fire development.

A.3.3.152 Pile Stability, Stable Piles. Pile stability performance has been shown to be a difficult factor to judge prior to a pile being subjected to an actual fire. In the test work completed, compartmented cartons *(see A.3.3.39, Compartmented)* have been shown to be stable under fire conditions. Tests also indicated cartons that were not compartmented tended to be unstable under fire conditions.

Storage on pallets, compartmented storage, and plastic components that are held in place by materials that do not deform readily under fire conditions are examples of stable storage.

3.3.153* Pile Stability, Unstable Piles. Those arrays where collapse, spillage of contents, or leaning of stacks across flue spaces occurs soon after initial fire development.

Defining the term *pile stability* affects the requirements for the protection of plastic and rubber commodities. Pile collapse needs to occur before or within 1 to 2 minutes after the first sprinkler operates to be a positive factor in fire control.

A.3.3.153 Pile Stability, Unstable Piles. Leaning stacks, crushed bottom cartons, and reliance on combustible bands for stability are examples of potential pile instability under a fire condition. An increase in pile height tends to increase instability.

3.3.154 Pilot Line Detector. See 3.3.205.4.13.

3.3.155 Pipe Schedule System. See 3.3.206.8.

3.3.156 Plastic Pallet. See 3.3.147.2.

3.3.157 Portable Racks. Racks that are not fixed in place and can be arranged in any number of configurations.

Portable racks should be treated no differently than fixed-in-place racks for the purpose of categorizing them as either "open rack" or "solid shelf rack." While portable racks often come with open-mesh bottoms or shelves, proper flue spaces are still required between them in order to meet the definition of "open rack" for sprinkler design purposes. Since it is not practical to provide portable racks with in-rack sprinklers, portable racks need to be arranged so they qualify as "open rack" in order to allow for effective ceiling-only sprinkler protection options.

3.3.158* Post-Installed Anchors. A device used for fastening pipe to the building structure, installed in hardened concrete.

A.3.3.158 Post-Installed Anchors. Examples of these are wedge or undercut anchors, or powder-driven studs.

3.3.159 Preaction Sprinkler System. See 3.3.206.9.

3.3.160 Premixed Antifreeze Solution. A mixture of an antifreeze material with water that is prepared and factory-mixed by the manufacturer with a quality control procedure in place that ensures that the antifreeze solution remains homogeneous and that the concentration is as specified.

EDUFIRE.IR

Traditional antifreeze solutions, propylene glycol and glycerine, are no longer permitted for use in new NFPA 13 sprinkler systems. All solutions used in new antifreeze systems must be listed, and modification of a listed solution in the field would violate the listing. Therefore, all solutions must now be premixed as a matter of course.

Factory-mixed solutions have been proven to remain homogeneous after installation, addressing concerns that solutions might settle and result in high concentrations of antifreeze in low pipe elevations and in sprinkler drops and low concentrations in the high pipe elevations, where the piping is prone to freezing.

The definition for premixed antifreeze solution was originally added for the interim period between the 2010 and 2013 editions of NFPA 13, when glycerine and propylene glycol were permitted in limited concentrations for new systems. Some systems are being modified or maintained under NFPA 25, *Standard for Inspection, Testing, and Maintenance of Water-Based Fire Protection Systems,* in which these solution types are still permitted. Where such solutions are introduced into existing systems, the solutions must be factory premixed.

In 2010, the Fire Protection Research Foundation (FPRF) investigated concerns related to the safety and performance of residential sprinklers discharging propylene glycol and glycerine antifreeze solutions. The results of that research led to a Tentative Interim Amendment (TIA) that was issued for NFPA 13 and became effective March 21, 2011. One of the new revisions introduced as part of the TIA was to require antifreeze solutions to be factory mixed. The requirement for factory mixing of antifreeze solutions provides an increased level of assurance that the proper portion of antifreeze concentrate is mixed with water in a manner that will result in the installation of a homogeneous antifreeze solution at the specified concentration.

SEE ALSO

The FPRF reports entitled "Antifreeze Solutions in Home Fire Sprinklers — Literature Review and Research Plan," and "Antifreeze Solutions in Home Fire Sprinklers — Phase II Research Final Report," which can be found at www.nfpa.org/Foundation.

3.3.161 Pressure Regulating Device. A device designed for the purpose of reducing, regulating, controlling, or restricting water pressure. [**24,** 2019]

3.3.162 Private Fire Hydrant. See 3.3.101.3.

3.3.163* Private Fire Service Main. Private fire service main, as used in this standard, is that pipe and its appurtenances on private property (1) between a source of water and the base of the system riser for water-based fire protection systems, (2) between a source of water and inlets to foam-making systems, (3) between a source of water and the base elbow of private hydrants or monitor nozzles, and (4) used as fire pump suction and discharge piping, (5) beginning at the inlet side of the check valve on a gravity or pressure tank. [**24,** 2019]

A.3.3.163 Private Fire Service Main. See Figure A.3.3.163.

FAQ [3.3.163]

What portion of the piping is considered the private fire service main?

In the context of sprinkler systems, a private fire service main is the piping that is either buried or above ground, connecting the water supply to the sprinkler system. A private fire service main is also the piping that supplies water to private hydrants and other devices used for manual fire fighting. Note that the requirements for private fire service mains were intended to apply to the portion of the piping system on private property that is dedicated to fire protection or combined use. However, where piping or equipment is installed in an area dedicated as an easement, such piping and equipment might also be a part of the public utility system.

3.3.164* Prying Factor. A factor based on fitting geometry and brace angle from vertical that results in an increase in tension load due to the effects of prying between the upper seismic brace attachment fitting and the structure.

A.3.3.164 Prying Factor. Prying factors in NFPA 13 are utilized to determine the design loads for attachments to concrete. Prying is a particular concern for anchorage to concrete because the anchor could fail in a brittle fashion.

The manufacturers of sway brace fittings should provide required prying factors for all their products. Implemented only a few years ago, the published prying factors are becoming more mainstream. The Hanging and Bracing Committee anticipates new products with more favorable prying factors will reach the marketplace in the future.

3.3.165 Public Hydrant. See 3.3.101.4.

3.3.166 Pumper Outlet. The hydrant outlet intended to be connected to a fire department pumper for use in taking supply from the hydrant for pumpers. [**24,** 2019]

Similar to fire department connections, some hydrant pumper outlets are now equipped with non-threaded connections in 4 in. (100 mm) or 5 in. (125 mm) sizes for fast connection of hose leading to the fire department pumper inlet. These non-threaded connections are intended to couple hoses of the appropriate size where the hose connections comply with NFPA 1963.

EDUFIRE.IR

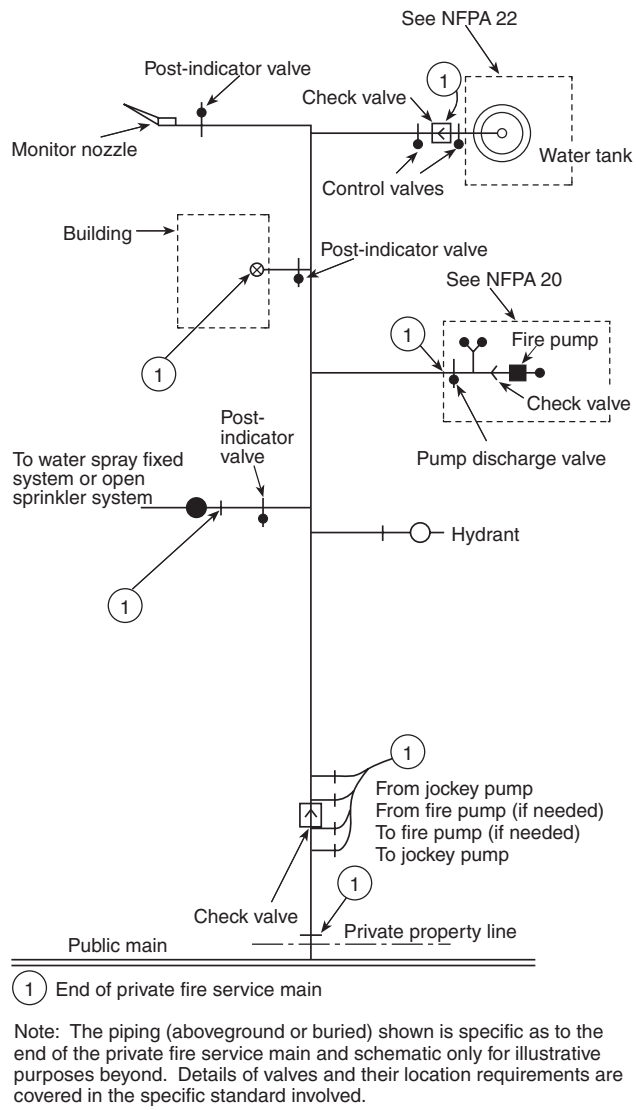

Note: The piping (aboveground or buried) shown is specific as to the end of the private fire service main and schematic only for illustrative purposes beyond. Details of valves and their location requirements are covered in the specific standard involved.

FIGURE A.3.3.163 *Typical Private Fire Service Main.*

3.3.167 Pyramid Tire Storage. On-floor storage in which tires are formed into a pyramid to provide pile stability.

An example of pyramid tire storage is shown in Exhibit 3.22.

3.3.168 Quick-Response Early Suppression (QRES) Sprinkler. See 3.3.205.4.14.

3.3.169 Quick-Response Extended Coverage Sprinkler. See 3.3.205.4.15.

3.3.170 Quick-Response (QR) Sprinkler. See 3.3.205.4.16.

3.3.171* Rack. Any combination of vertical, horizontal, and diagonal members that supports stored materials. [**1,** 2018]

A.3.3.171 Rack. Shelving can be solid, slatted, or open. Racks can be fixed, portable, or movable. Loading can be either manual, using lift trucks, stacker cranes, or hand placement, or automatic, using machine-controlled storage and retrieval systems.

EDUFIRE.IR

EXHIBIT 3.22 *Pyramid Tire Storage. (Courtesy of Ford Motor Company)*

Rack storage as referred to in this standard contemplates commodities in a rack structure, usually steel. Many variations of dimensions are found. Racks can be single-, double-, or multiple-row, with or without solid shelving. The standard commodity used in most of the tests was 42 in. (1050 mm) on a side. Examples of the types of racks covered in this standard are as follows:

(1) *Double-Row Racks*. Pallets rest on two beams parallel to the aisle. Any number of pallets can be supported by one pair of beams. *[See Figure A.3.3.171(a) through Figure A.3.3.171(d).]*
(2) *Automatic Storage-Type Rack*. The pallet is supported by two rails running perpendicular to the aisle. *[See Figure A.3.3.171(e).]*
(3) *Multiple-Row Racks More Than Two Pallets Deep, Measured Aisle to Aisle*. These racks include drive-in racks, drive-through racks, flow-through racks, portable racks arranged in the same manner, and conventional or automatic racks with aisles less than 42 in. (1050 mm) wide. *[See Figure A.3.3.171(f) through Figure A.3.3.171(i).]*
(4) *Movable Racks*. Movable racks are racks on fixed rails or guides. They can be moved back and forth only in a horizontal, two-dimensional plane. A moving aisle is created as abutting racks are either loaded or unloaded, then moved across the aisle to abut other racks. *[See Figure A.3.3.171(k).]*
(5) *Cantilever Rack*. The load is supported on arms that extend horizontally from columns. The load can rest on the arms or on shelves supported by the arms. *[See Figure A.3.3.171(j).]*

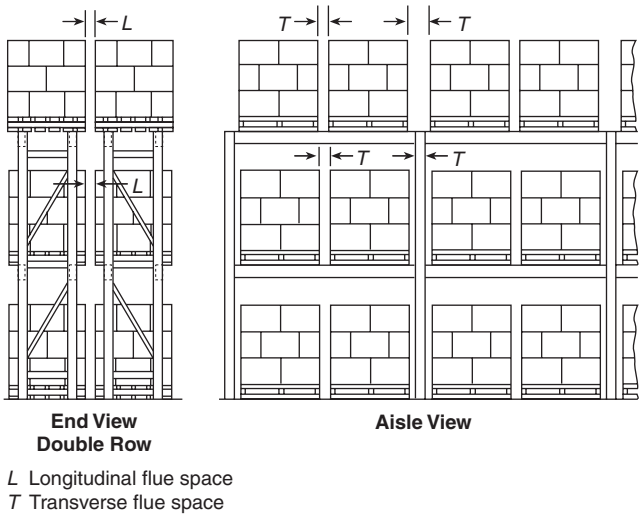

FIGURE A.3.3.171(a) *Conventional Pallet Rack.*

EDUFIRE.IR

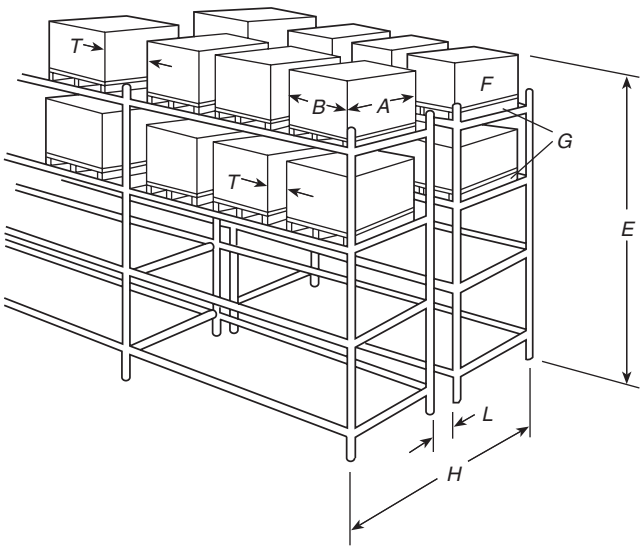

A Load depth
B Load width
E Storage height
F Commodity
G Pallet
H Rack depth
L Longitudinal flue space
T Transverse flue space

FIGURE A.3.3.171(b) *Double-Row Racks Without Solid or Slatted Shelves.*

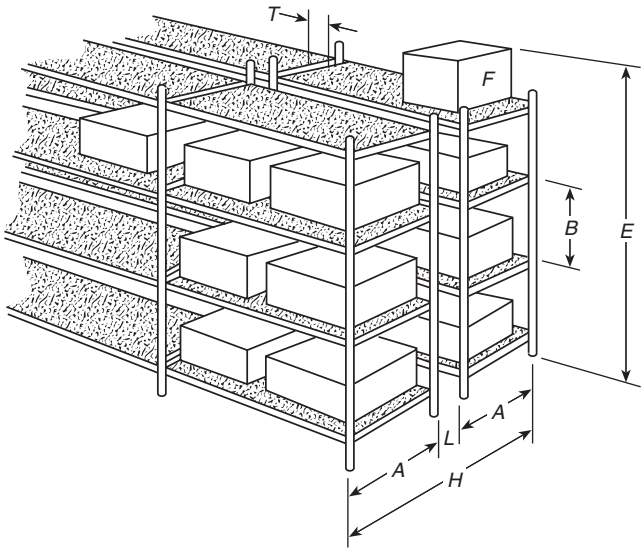

A Shelf depth
B Shelf height
E Storage height
F Commodity
H Rack depth
L Longitudinal flue space
T Transverse flue space

FIGURE A.3.3.171(c) *Double-Row Racks with Solid Shelves.*

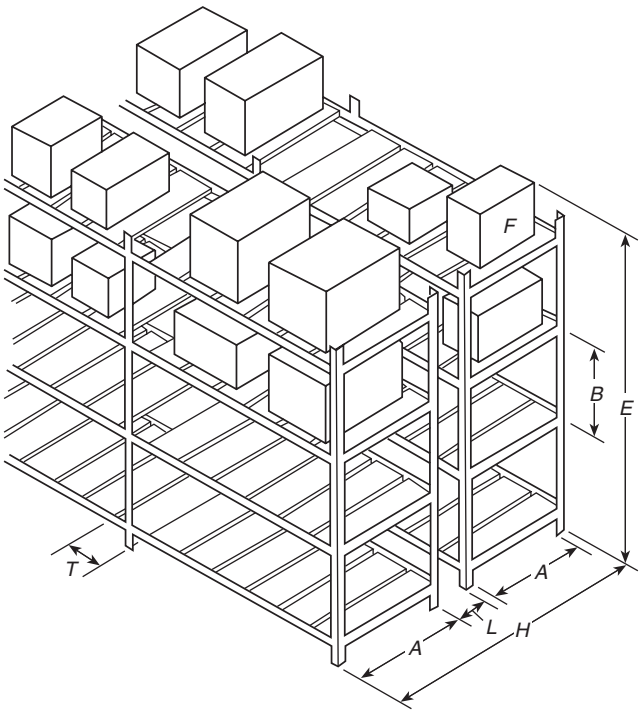

A Shelf depth
B Shelf height
E Storage height
F Commodity
H Rack depth
L Longitudinal flue space
T Transverse flue space

FIGURE A.3.3.171(d) *Double-Row Racks with Slatted Shelves.*

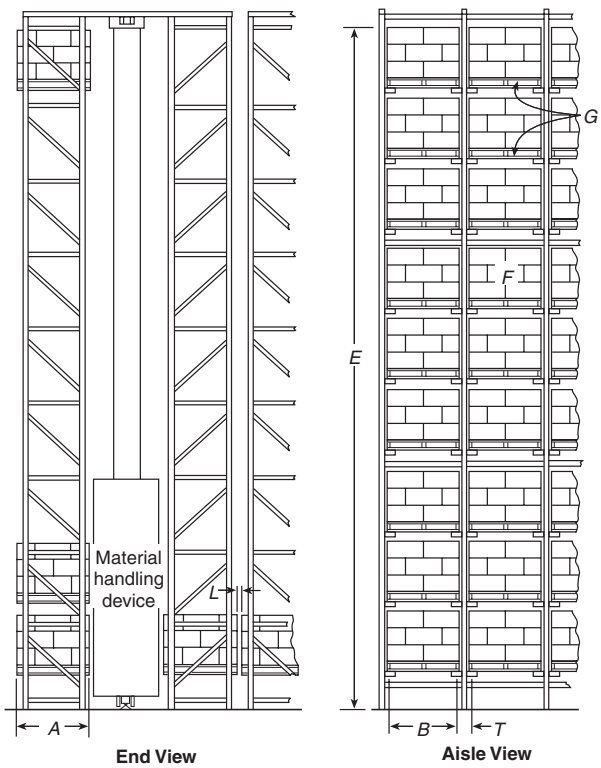

A Load depth
B Load width
E Storage height
F Commodity
G Pallet
L Longitudinal flue space
T Transverse flue space

FIGURE A.3.3.171(e) *Automatic Storage-Type Rack.*

EDUFIRE.IR

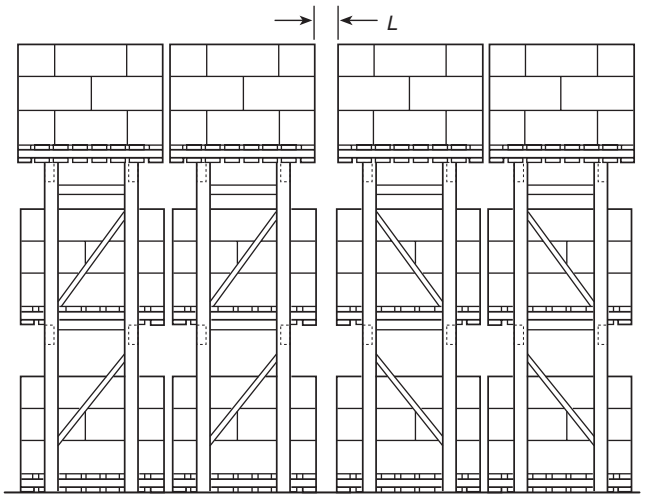

L Longitudinal flue space

FIGURE A.3.3.171(f) *Multiple-Row Rack Served by Reach Truck.*

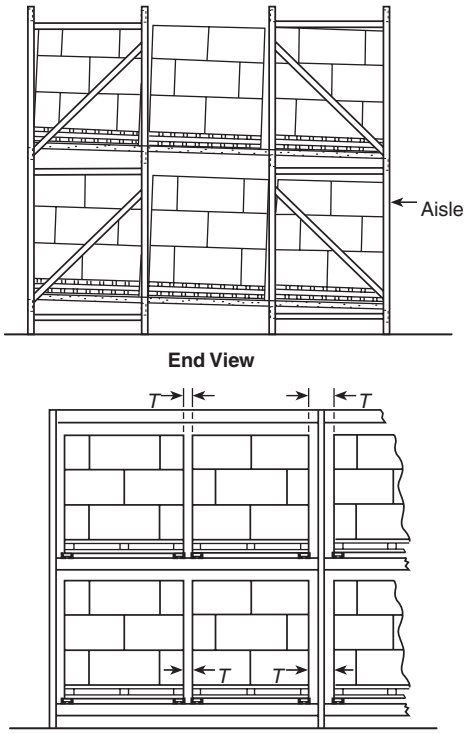

T Transverse flue space

FIGURE A.3.3.171(g) *Flow-Through Pallet Rack.*

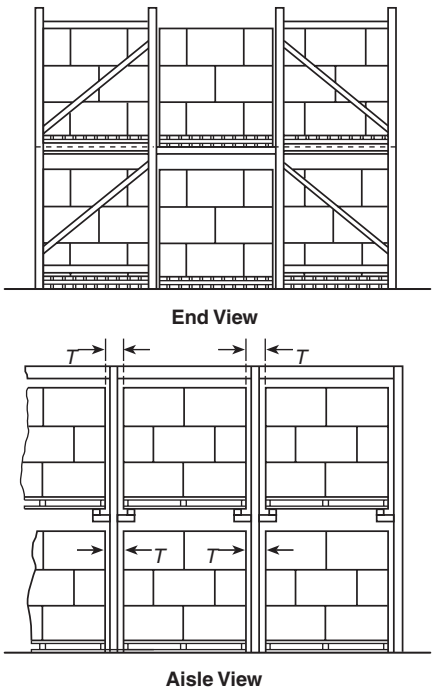

T Transverse flue space

FIGURE A.3.3.171(h) *Drive-In Rack — Two or More Pallets Deep (Fork Truck Drives into Rack to Deposit and Withdraw Loads in Depth of Rack).*

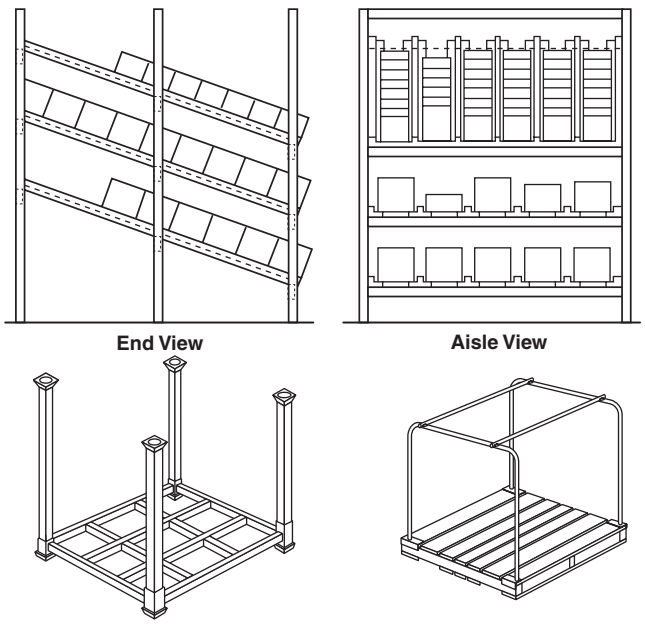

FIGURE A.3.3.171(i) *Flow-Through Racks (Top) and Portable Racks (Bottom).*

EDUFIRE.IR

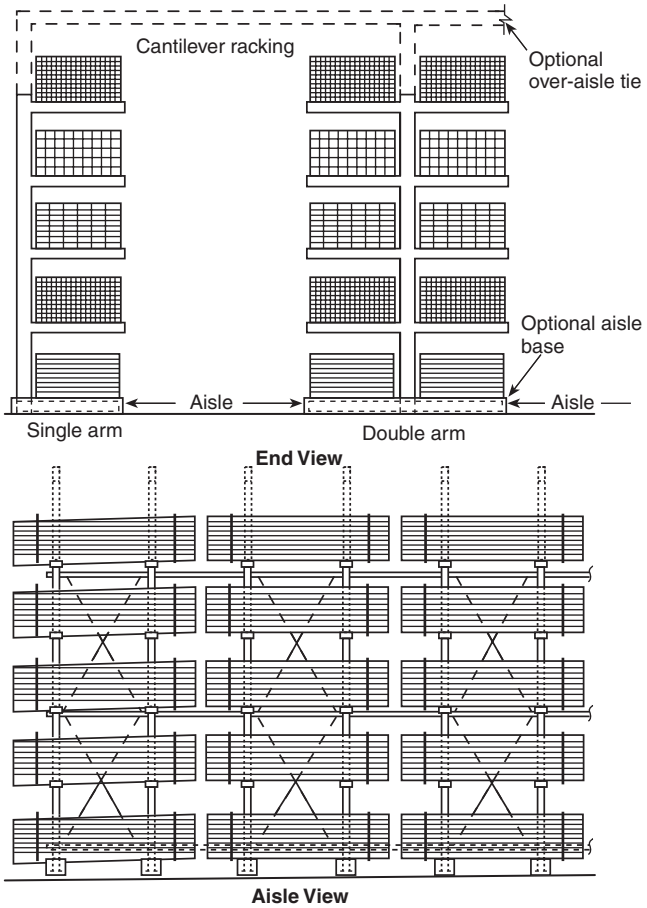

FIGURE A.3.3.171(j) *Cantilever Rack.*

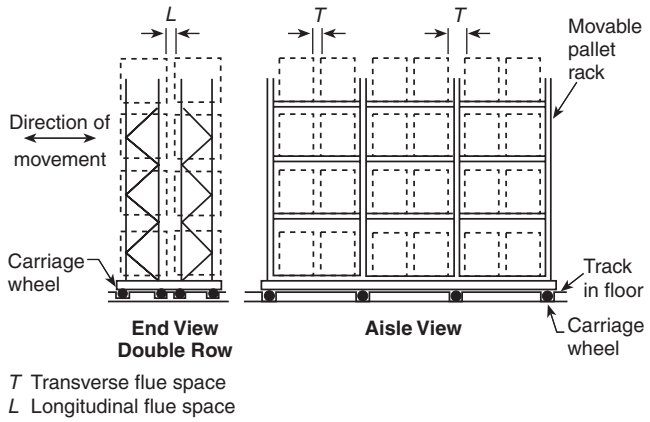

FIGURE A.3.3.171(k) *Movable Rack.*

Load depth in conventional or automatic racks should be considered a nominal 4 ft (1.2 m). *[See Figure A.3.3.171(b).]*

When catwalks are installed between racks, these areas are not to be considered flue spaces.

3.3.172 Rack Shelf Area. The area of the horizontal surface of a shelf in a rack defined by perimeter aisle(s) or nominal 6 in. (150 mm) flue spaces on all four sides, or by the placement of loads that block openings that would otherwise serve as the required flue spaces.

3.3.173 Rated Capacity. The flow available from a hydrant at the designated residual pressure (rated pressure) either measured or calculated. [**24,** 2019]

3.3.174* Raw Water Source. A water supply that has not been treated and could contain foreign material that could enter the sprinkler system.

The definition for *raw water source* clarifies that it does not relate to potability, but rather that that it might contain foreign materials that can enter the system piping and accumulate in a sprinkler system. Paragraph 16.3.11.1 requires return bends on sprinkler branch lines to minimize accumulation of material at the sprinkler inlet.

EDUFIRE.IR

A.3.3.174 Raw Water Source. Examples of raw water sources are mill ponds, lakes, streams, open-top reservoirs, and so forth. Examples of non-raw water sources can include city water supplies, cisterns, pressure tanks, gravity tanks, break tanks, aquifers, and so forth. Water sources that are closed or protected from direct contact with the environment should not be considered raw.

3.3.175 Recessed Sprinkler. See 3.3.205.3.4.

3.3.176 Reinforced Plastic Pallet. See 3.3.147.3.

3.3.177 Residential Sprinkler. See 3.3.205.4.17.

3.3.178 Residual Hydrant. See 3.3.101.5.

3.3.179 Residual Pressure. The pressure that exists in the distribution system, measured at the residual hydrant at the time the flow readings are taken at the flow hydrants. [**24,** 2019]

3.3.180 Riser Nipple. A vertical pipe between the cross main and branch line.

The definition of the term *riser nipple* was added to the 2010 edition to correspond with a change to 18.5.8.2 permitting the omission of four-way braces on riser nipples. This text clarified the intent of the standard as to exactly what constitutes a riser nipple.

3.3.181 Risers. The vertical supply pipes in a sprinkler system.

3.3.182 Roll Paper Storage.

3.3.182.1 Banded Roll Paper Storage. Rolls provided with a circumferential steel strap [⅜ in. (10 mm) or wider] at each end of the roll.

3.3.182.2 Horizontal Roll Paper Storage. Rolls stored with the cores in the horizontal plane (on-side storage).

3.3.182.3* Roll Paper Storage Height. The maximum vertical distance above the floor at which roll paper is normally stored.

A.3.3.182.3 Roll Paper Storage Height. The size of rolls and limitations of mechanical handling equipment should be considered in determining maximum storage height.

3.3.182.4 Vertical Roll Paper Storage. Rolls stored with the cores in the vertical plane (on-end storage).

3.3.182.5* Wrapped Roll Paper Storage. Rolls provided with a complete heavy kraft covering around both sides and ends.

A.3.3.182.5 Wrapped Roll Paper Storage. Rolls that are completely protected with a heavyweight kraft wrapper on both sides and ends are subject to a reduced degree of fire hazard. Standard methods for wrapping and capping rolls are outlined in Figure A.3.3.182.5.

In some cases, rolls are protected with laminated wrappers, using two sheets of heavy kraft with a high-temperature wax laminate between the sheets. Where using this method, the overall weight of wax-laminated wrappers should be based on the basis weight per 1000 ft^2 (93 m^2) of the outer sheet only, rather than on the combined basis weight of the outer and inner laminated wrapper sheets. A properly applied wrapper can have the effect of changing the class of a given paper to essentially that of the wrapper material. The effect of applying a wrapper to tissue has not been determined by test.

EDUFIRE.IR

Wrapper Exterior wrapper Body wrapper	General term for protective wrapping of sides and ends on roll.
Body wrap Sleeve wrap Wrap — do not cap	Wrapper placed around circumference of roll. No heads or caps needed. 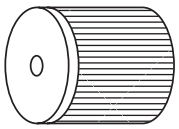
	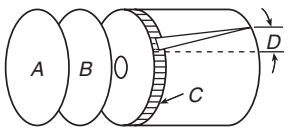
Heads Headers	Protection applied to the ends of the rolls (*A* and *B*). Heads do not lap over the end of the roll.
Inside heads	Protection applied to the ends of the rolls next to the roll itself (*B*). The wrapper of the rolls is crimped down over these heads.
Outside heads	Protection applied to the ends of the rolls on the outside (*A*). This head is applied after the wrapper is crimped.
Edge protectors Edge bands	Refers to extra padding to prevent damage to roll edges (*C*).
Overwrap	The distance the body wrap or wrapper overlaps itself (*D*).
Roll cap	A protective cover placed over the end of a roll. Edges of cap lap over the end of the roll and are secured to the sides of the roll. 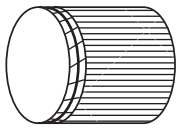

FIGURE A.3.3.182.5 *Wrapping and Capping Terms and Methods.*

3.3.183 Roll Paper Storage Height. See 3.3.182.3.

3.3.184 Roof Height. The distance between the floor and the underside of the roof deck within the storage area.

3.3.185* Rubber Tire Rack Illustrations. See Figure A.3.3.185(a) through Figure A.3.3.185(g).

Exhibit 3.23 shows an example of laced tire storage on portable racks.

A.3.3.185 Rubber Tire Rack Illustrations. Figure A.3.3.185(a) through Figure A.3.3.185(g) do not necessarily cover all possible rubber tire storage configurations.

3.3.186 Rubber Tires. Pneumatic tires for passenger automobiles, aircraft, light and heavy trucks, trailers, farm equipment, construction equipment (off-the-road), and buses.

EDUFIRE.IR

EXHIBIT 3.23 *Laced Tire Storage on Portable Racks. (Courtesy of Ford Motor Company)*

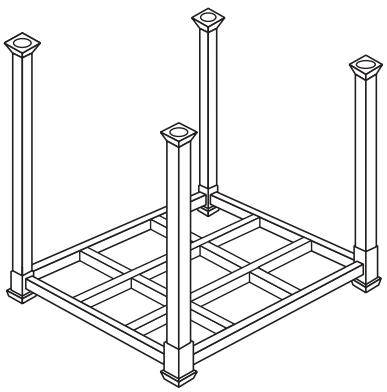

FIGURE A.3.3.185(a) *Typical Open Portable Tire Rack Unit.*

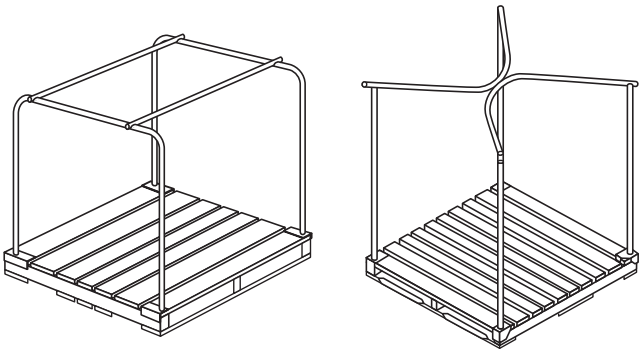

FIGURE A.3.3.185(b) *Typical Palletized Portable Tire Rack Units.*

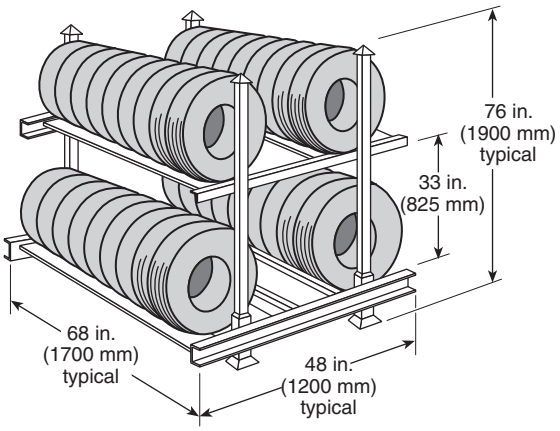

FIGURE A.3.3.185(c) *Open Portable Tire Rack.*

EDUFIRE.IR

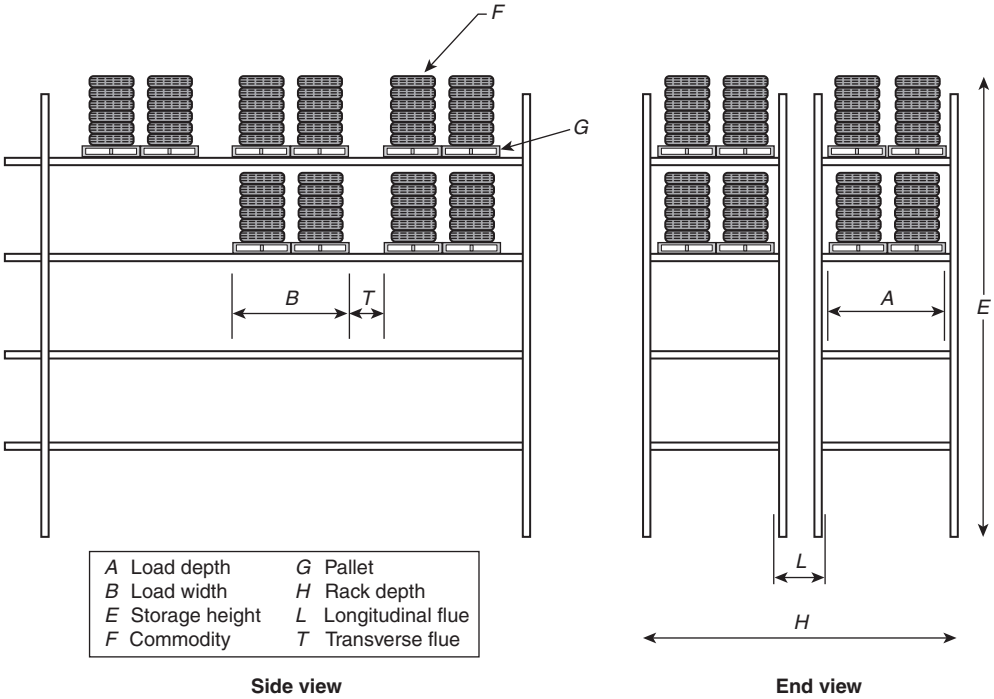

FIGURE A.3.3.185(d) *Double-Row Fixed Tire Rack Storage.*

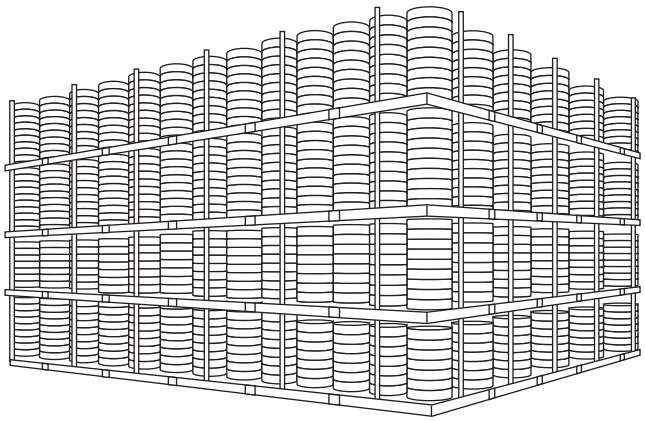

FIGURE A.3.3.185(e) *Palletized Portable Tire Rack, On-Side Storage Arrangement (Banded or Unbanded).*

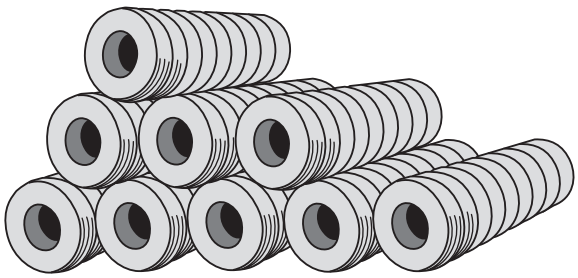

FIGURE A.3.3.185(f) *On-Floor Storage; On-Tread, Normally Banded.*

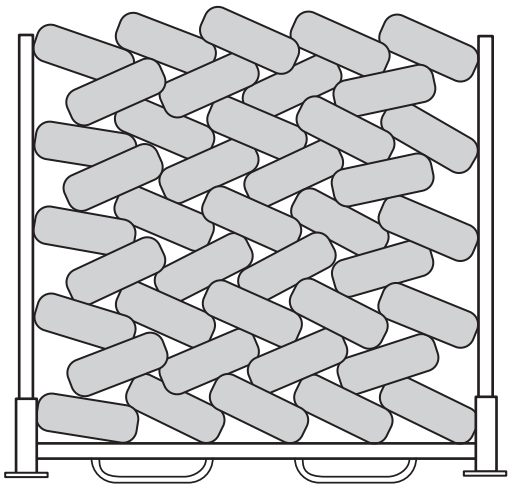

FIGURE A.3.3.185(g) *Typical Laced Tire Storage.*

EDUFIRE.IR

3.3.187* Seismic Separation Assembly. An assembly of fittings, pipe, flexible pipe, and/or couplings that permits movement in all directions to accommodate seismic differential movement across building seismic separation joints.

A.3.3.187 Seismic Separation Assembly. Seismic separation assemblies include traditional assemblies as shown in Figure A.18.3(a) and seismic loops as shown in Figure A.18.3(b).

3.3.188* Shelf Storage. Storage on structures up to and including 30 in. (750 mm) deep and separated by aisles at least 30 in. (750 mm) wide.

A.3.3.188 Shelf Storage. Shelves are usually 2 ft (600 mm) apart vertically.

The term *shelf storage* is defined in 3.3.188. The 30 in. (750 mm) maximum width is measured from aisle to aisle, as indicated in Exhibit 3.24.

FAQ [3.3.188]

How should multiple shelf units be addressed?

As an example, two back-to-back shelves with an overall width greater than 30 in. (750 mm) should reference 3.3.12 and follow the design guidelines for back-to-back shelves. This approach assumes the width and the arrangement of the back-to-back shelves meet the definition limitations; otherwise, they may have to be treated as solid shelves.

3.3.189 Shop-Welded. As used in this standard, *shop* in the term *shop-welded* means either (1) a sprinkler contractor's or fabricator's premise or (2) an area specifically designed or authorized for welding, such as a detached outside location, maintenance shop, or other area (either temporary or permanent) of noncombustible or fire-resistive construction free of combustible and flammable contents and suitably segregated from adjacent areas.

3.3.190 Sidewall Sprinkler. See 3.3.205.3.5.

3.3.191* Single-Row Racks. Racks that have no longitudinal flue space and that have a depth up to 6 ft (1.8 m) with aisles having a width of at least 3.5 ft (1.1 m) between loads on racks.

Where a storage rack has a longitudinal flue or the aisle width between storage racks is less than 3.5 ft (1.1 m), refer to the definitions for the terms *double-row racks* and *multiple-row racks* for further guidance.

A.3.3.191 Single-Row Racks. When a narrow rack with a depth up to 6 ft (1.8 m) is located within 24 in. (600 mm) of a wall, it is considered to have a longitudinal flue and is treated as a double-row rack.

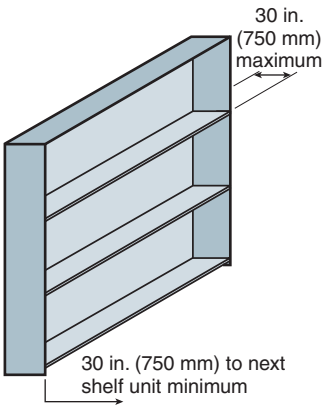

EXHIBIT 3.24 Shelf Storage.

3.3.192 Slatted Shelf Rack. A rack where shelves are fixed in place with a series of narrow individual solid supports used as the shelf material and spaced apart with regular openings.

It should be noted that a slatted shelf rack does not always default to the category of "solid shelf rack"; it could qualify as "open rack" depending on the size of the slats as well as the width and location of the flue spaces. Refer to the definition of the term *open rack* for further guidance.

3.3.193 Slave Pallet. See 3.3.147.4.

3.3.194 Sloped Ceiling. See 3.3.26.3.

3.3.195* Small Openings. Openings in the ceiling or construction features of a concealed space that allow limited amounts of heat to enter the concealed space.

A.3.3.195 Small Openings. A return air diffuser can be 4 ft by 2 ft (1.2 m by 600 mm) and meet the definition of a small opening. A linear diffuser can be longer than 4 ft (1.2 m) but is then limited to 8 in. (200 mm) in width (or least dimension). Spaces between ceiling panels of architectural features that create a concealed space must meet the same criteria.

3.3.196 Small Room. A compartment of light hazard occupancy classification having unobstructed construction and a floor area not exceeding 800 ft^2 (74 m^2).

It is important to note that a small room is considered to be a compartment of a maximum size and construction.

FAQ [3.3.196]

In what occupancies can the design allowances for small rooms be utilized?

The design allowances in 10.2.4.1.2 and 10.2.5.2.3 are permitted to be utilized in light hazard occupancies only as indicated in the definition of the term *small room*.

Fires in small rooms of a light hazard occupancy present a lesser challenge to the sprinkler system. As a result, sprinklers installed in rooms that meet the criteria for small rooms are given an exception to the spacing rules of 10.2.5.2.1 For applications of small room provisions, see Figure A.10.2.5.2.3(a) through Figure A.10.2.5.2.3(d).

EDUFIRE.IR

FAQ [3.3.196]

Do openings from small rooms require doors in order for the room to be classified as a small room?

Small room openings do not need to be protected with doors if the openings are equipped with lintels that have a minimum depth of 8 in. (200 mm) and have a maximum wall opening of 8 ft (2.4 m). A single small opening of 36 in. (900 mm) or less in width is permitted within a compartment without a lintel.

Where required, a lintel with a depth of at least 8 in. (200 mm) ensures adequate collection of the heat from a fire at the ceiling of the room of fire origin and promotes faster operation of the sprinklers nearest to the fire.

FAQ [3.3.198]

If the shelf material is considered open but the loads on the shelf, without the required 6 in. (150 mm) flue space between loads, are greater than 20 ft² (1.9 m²) in area, do the shelves have to be protected as solid shelf?

One of the most significant changes to rack storage in the 2010 edition was the new method to calculate the rack shelf area. The placement of loads on the shelf now affects the calculated area of the shelf. Previous editions dealt only with the shelf material alone and did not consider the loads on the shelf. With this definition, shelving material that had been classified as open, such as wire grate, which is more than 50 percent open, could be calculated as solid shelf if the loads on the shelf cover the required flue spaces to separate shelf area calculations.

The intent was to have flues surrounding the load or shelf material that will not block more than 20 ft² (1.9 m²) in area. Even though the shelf material (if any) is considered open, the distribution is blocked if the area of load or shelf is greater than 20 ft² (1.9 m²) in area and solid shelf rack rules would apply.

3.3.197 Smooth Ceiling. See 3.3.26.4.

3.3.198 Solid Shelf Rack. A rack that is not defined as an open rack where shelves are fixed in place with a solid, slatted, or wire mesh barrier used as the shelf material and having limited openings in the shelf area.

3.3.199* Solid Shelving. Shelving that is fixed in place, slatted, wire mesh, or other type of shelves located within racks. The area of a solid shelf is defined by perimeter aisle or flue space on all four sides or by the placement of loads that block openings that would otherwise serve as the required flue spaces. Solid shelves having an area equal to or less than 20 ft² (1.9 m²) are defined as open racks. Shelves of wire mesh, slats, or other materials more than 50 percent open and where the flue spaces are maintained are defined as open racks.

Exhibit 3.25 illustrates a storage rack with solid shelving.

EXHIBIT 3.25 Storage Rack with Solid Shelving.

A.3.3.199 Solid Shelving. The placement of loads affects the calculated area of the shelf. It is the intent to apply this definition to loads on the rack where 6 in. (150 mm) nominal flues are not provided on all four sides, regardless of whether shelving materials are present. See 20.5.3.1.2for additional allowances for double-row racks up 25 ft (7.6 m) and for multiple-row racks of any height without a longitudinal flue space.

3.3.200 Solid Unit Load of Nonexpanded Plastic (Either Cartoned or Exposed). A load that does not have voids (air) within the load and that burns only on the exterior of the load; water from sprinklers might reach most surfaces available to burn.

3.3.201 Solid-Piled Storage. Storage of commodities stacked on each other.

3.3.202 Special Sprinkler. See 3.3.205.4.18.

3.3.203 Spray Sprinkler. See 3.3.205.4.19.

3.3.204 Sprig. A pipe that rises vertically and supplies a single sprinkler.

3.3.205 Sprinkler Definitions.

General characteristics that define a sprinkler's ability to control or suppress a fire include the following:

1. Thermal response, whether quick or standard response
2. Spray distribution, including density and pattern

EDUFIRE.IR

3. Coverage area
4. Occupancy use or limitations, including special applications
5. Installation orientation

Historically, sprinklers were of the upright, pendent, or sidewall type and were classified as having either frangible bulb or solder link operating mechanisms. Since1980 , many advances have been made with regard to the scientific understanding of fire, sprinklers, and their interaction.

These technological advances are responsible for the production of an increasingly large variety of sprinkler types and styles. Sprinklers are now manufactured and designed to allow systems to perform specific functions. Subsection 3.3.205 describes the features that differentiate sprinklers from one another.

3.3.205.1 Automatic Sprinkler. A fire suppression or control device that operates automatically when its heat-activated element is heated to its thermal rating or above, allowing water to discharge over a specified area.

The definition of the term *automatic sprinkler* helps to clarify the difference between an automatic sprinkler and an open sprinkler. (See 3.3.205.4.11.)

3.3.205.2* General Sprinkler Characteristics. The following are characteristics of a sprinkler that define its ability to control or extinguish a fire. (1) Thermal sensitivity. A measure of the rapidity with which the thermal element operates as installed in a specific sprinkler or sprinkler assembly. One measure of thermal sensitivity is the response time index (RTI) as measured under standardized test conditions. (a) Sprinklers defined as fast response have a thermal element with an RTI of 50 (meters-seconds)$^{1/2}$ or less. (b) Sprinklers defined as standard response have a thermal element with an RTI of 80 (meters-seconds)$^{1/2}$ or more. (2) Temperature rating. (3) K-factor *(see Chapter 7).* (4) Installation orientation *(see 3.3.205.3).* (5) Water distribution characteristics (i.e., application rate, wall wetting). (6) Special service conditions.

A.3.3.205.2 General Sprinkler Characteristics. The response time index (RTI) is a measure of the sensitivity of the sprinkler's thermal element as installed in a specific sprinkler. It is usually determined by plunging a sprinkler into a heated laminar airflow within a test oven. The plunge test is not currently applicable to certain sprinklers.

The RTI is calculated using the following:

(1) The operating time of the sprinkler
(2) The operating temperature of the sprinkler's heat-responsive element (as determined in a bath test)
(3) The air temperature of the test oven
(4) The air velocity of the test oven
(5) The sprinkler's conductivity (c) factor, which is the measure of conductance between the sprinkler's heat-responsive element and the sprinkler oven mount

Other factors affecting response include the temperature rating, sprinkler position, fire exposure, and radiation.

ISO 6182-1, *Fire protection — Automatic sprinkler systems — Part 1: Requirements and test methods for sprinklers*, currently recognizes the RTI range of greater than 50 (meters-seconds)$^{1/2}$ and less than 80 (meters-seconds)$^{1/2}$ as special response. Such sprinklers can be recognized as special sprinklers under 15.2.1.

It should be recognized that the term *fast response* (like the term *quick response* used to define a particular type of sprinkler) refers to the thermal sensitivity within the operating element of a sprinkler, not the time of operation in a particular installation. Many other factors, such as ceiling height, spacing, ambient room temperature, and distance below ceiling, affect the time of response of sprinklers. In most fire scenarios, sprinkler activation times will be shortest where the thermal elements are located 1 in. (25 mm) to 3 in. (75 mm) below the ceiling. A fast-response sprinkler is expected to operate quicker

EDUFIRE.IR

than a standard-response sprinkler in the same installation orientation. For modeling purposes, concealed sprinklers can be considered equivalent to pendent sprinklers having a similar thermal response sensitivity installed 12 in. (300 mm) below smooth unobstructed ceilings, and recessed sprinklers can be considered equivalent to pendent sprinklers having a similar thermal response sensitivity installed 8 in. (200 mm) below smooth unobstructed ceilings.

EXHIBIT 3.26 *Victaulic Quick-Response Standard Spray Sprinkler. (Courtesy of Victaulic®)*

NFPA 13 addresses the concept of thermal sensitivity by classifying sprinklers as either fast response or standard response. Fast-response sprinklers, such as the one shown in Exhibit 3.26, include those sprinklers that have a thermal element with a response time index (RTI of 90 (ft-sec)$^{1/2}$ [50 (m-sec)$^{1/2}$] or less. Standard-response sprinklers include those sprinklers that have a thermal element with an RTI of 145 (ft-sec)$^{1/2}$ [80 (m-sec)$^{1/2}$] or more.

The definitions of several sprinkler types, such as residential sprinkler, quick-response sprinkler, and early suppression fast-response sprinkler, clearly reflect the emphasis on a sprinkler's thermal sensitivity. Commentary Table 3.1 compares the various types of fast-response sprinklers and lists which standards provide guidance on their allowance and installation.

With regard to the third sprinkler characteristic given in 3.3.205.2 (K-factor), the size of a sprinkler's orifice influences certain performance features, such as the amount of water discharging from the sprinkler and the size of the water droplets. The size and shape of the orifice are indicated through the sprinkler's K-factor. A provision in 7.2.2 provides a means of control with respect to the manufacture and listing of sprinklers with K-factors that differ from those currently identified in the standard. See 7.2.2.1 and Table 7.2.2.1 for sprinkler discharge characteristics.

In addition, NFPA 13 requires that CMSA and ESFR sprinklers have a K-factor of at least 11.2. This limitation establishes a level of consistency with regard to the operational features and functional objectives of these sprinklers.

COMMENTARY TABLE 3.1 *Comparison of Sprinklers with Fast-Response Operating Elements.*

	Sprinklers with Fast-Response Operating Elements			
	Residential	***Quick Response***	***Early Suppression Fast Response***	***Quick Response Extended Coverage***
Tested by	UL 1626 and FM Class 2030	UL 199 and FM Class 2000	UL 1767 and FM Class 2008	UL 199 and FM Class 2000
Installed in accordance with	NFPA 13, Chapter 12	NFPA 13 for spacing, density, and location	NFPA 13, Chapter 14	NFPA 13 for spacing, density, and location
Considered acceptable	NFPA 13D and NFPA 13R	Limited use in NFPA 13D and NFPA 13R	—	Limited use in NFPA 13R
Considered not acceptable	—	—	NFPA 13D and NFPA 13R	NFPA 13D

3.3.205.3 Installation Orientation. The following sprinklers are defined according to orientation.

The sprinklers described in 3.3.205.3 are based on the geometry of the sprinkler installation. Representative discharge patterns for these devices allow them to be categorized as concealed, flush, pendent, and recessed sprinklers, all of which have similar discharge patterns and are mounted to the bottom of a branch line or pipe drop. Sidewall sprinklers typically are installed along a wall or lintel and discharge water away from the wall into the room or space. Sidewall sprinklers can be mounted on the side, bottom, or top of a branch line, as specified in their listings. Upright sprinklers have a spray pattern that appears similar to that of a pendent sprinkler. The difference is that upright sprinklers are mounted to the top of branch lines or sprigs.

3.3.205.3.1 Concealed Sprinkler. A recessed sprinkler with cover plate.

EDUFIRE.IR

CLOSER LOOK [3.3.205.2]

Sprinkler Characteristics

The key characteristics that affect a sprinkler's ability to control or suppress a fire are specifically addressed by NFPA 13. These characteristics include temperature rating, orifice size, installation orientation, water distribution patterns, hydraulic criteria, wall-wetting characteristics, and thermal sensitivity.

Because sprinkler manufacturers and researchers have investigated the effects of modifying certain sprinkler characteristics, sprinklers with faster operating times, broader spray patterns, and deeper water penetration capabilities are becoming more widely available.

With regard to A.3.3.205.2(1), operating time, or thermal sensitivity, is considered a measure of the rapidity with which the sprinkler's thermal element operates when mounted within the sprinkler frame. A common measure of thermal sensitivity is the RTI. The RTI is usually determined by plunging a sprinkler into a heated laminar (nonturbulent) airflow within a test oven. However, this test is not readily applicable to certain sprinklers, such as recessed or concealed sprinklers.

As indicated in A.3.3.205.2, RTI is not necessarily a measure of the responsiveness of a given sprinkler when installed in the field. The RTI of a sprinkler is a function of the convective heat transfer coefficient, the specific heat of the operating element, the mass of the operating element, and the surface area of the operating element. Other factors that can affect a sprinkler's thermal sensitivity in the field include temperature rating, position from the ceiling, attachment to piping, and anticipated fire exposure. However, a fast-response sprinkler can be expected to operate faster than a standard-response sprinkler given the same conditions. RTI is used to comparatively describe the sensitivity of the sprinkler link for any given sprinkler.

Exhibit 3.27 is a photo of an assembled concealed sprinkler as well as a diagram showing the various components of the device. As shown in the diagram, the cover plate drops away when exposed to a certain amount of heat. The fusible elements holding the cover plate are designed to operate prior to the activation of the sprinkler's thermal element. The cover plate is included as part of the listed sprinkler assembly.

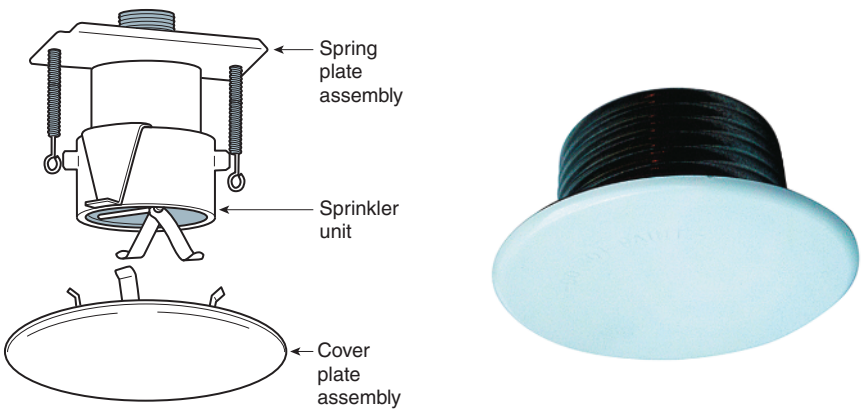

EXHIBIT 3.27 *Standard Model G Concealed Ceiling Sprinkler: (left) Diagram of Unit Components; (right) Photo of Typical Unit. (Courtesy of Reliable Automatic Sprinkler Co., Inc.)*

3.3.205.3.2 Flush Sprinkler. A sprinkler in which all or part of the body, including the shank thread, is mounted above the lower plane of the ceiling.

Exhibit 3.28 illustrates a flush sprinkler, which is defined in 3.3.205.3.2.

3.3.205.3.3 Pendent Sprinkler. A sprinkler designed to be installed in such a way that the water stream is directed downward against the deflector.

Exhibit 3.29 illustrates a standard spray pendent sprinkler.

3.3.205.3.4 Recessed Sprinkler. A sprinkler in which all or part of the body, other than the shank thread, is mounted within a recessed housing.

Exhibit 3.30 shows a recessed sprinkler.

EXHIBIT 3.28 *Viking Model H Standard Spray Pendent Flush-Mount Sprinkler. (Courtesy of Viking Group, Inc.)*

EDUFIRE.IR

EXHIBIT 3.29 Standard Spray Pendent Sprinkler. (Courtesy of Reliable Automatic Sprinkler Co., Inc.)

EXHIBIT 3.30 Recessed Sprinkler. (Courtesy of Reliable Automatic Sprinkler Co., Inc.)

EXHIBIT 3.31 Horizontal Sidewall Sprinkler. (Courtesy of Reliable Automatic Sprinkler Co., Inc.)

EXHIBIT 3.32 Upright Sprinklers. (Courtesy of Reliable Automatic Sprinkler Co., Inc.)

3.3.205.3.5 Sidewall Sprinkler. A sprinkler having special deflectors that are designed to discharge most of the water away from the nearby wall in a pattern resembling one-quarter of a sphere, with a small portion of the discharge directed at the wall behind the sprinkler.

Exhibit 3.31 illustrates a horizontal sidewall sprinkler.

3.3.205.3.6 Upright Sprinkler. A sprinkler designed to be installed in such a way that the water spray is directed upwards against the deflector.

Exhibit 3.32 illustrates two examples of upright sprinklers.

3.3.205.4 Sprinkler Types. The following sprinklers are defined according to design and/or performance characteristics.

3.3.205.4.1* Control Mode Density/Area (CMDA) Sprinkler. A type of spray sprinkler intended to provide fire control in storage applications using the design density/area criteria described in this standard.

A.3.3.205.4.1 Control Mode Density/Area (CMDA) Sprinkler. This definition is focused on the storage application since the term CMDA is used in the storage chapters. As indicated in Chapter 20, spray sprinklers intended for storage applications requiring a design density greater than 0.34 gpm/ft (13.9 mm/min) should have a nominal K-factor of 11.2 or larger and be listed for storage applications. Spray sprinklers having a nominal K-factor of 5.6 or 8.0 are permitted to be used for storage applications as a CMDA sprinkler within certain design densities as described in Chapter 20.

Spray type sprinklers intended for use in accordance with the occupancy hazard density/area curves could also be considered CMDA sprinklers. However, the CMDA terminology is generally not referenced in the non-storage chapters, and this term is not used to describe these sprinklers in the product listings.

3.3.205.4.2* Control Mode Specific Application (CMSA) Sprinkler. A type of spray sprinkler that is capable of producing characteristic large water droplets and that is listed for its capability to provide fire control of specific high-challenge fire hazards.

In the 2010 edition, the term *control mode specific application (CMSA) sprinkler* was added to incorporate a wide variety of sprinklers capable of fire control in high-challenge fire scenarios. The large-drop sprinkler, which was defined in previous editions of this standard, is now included within this category. Installation and design requirements for these sprinklers can be found in Chapter 13 and Chapter 22.

EDUFIRE.IR

A.3.3.205.4.2 Control Mode Specific Application (CMSA) Sprinkler. A large drop sprinkler is a type of CMSA sprinkler that is capable of producing characteristic large water droplets and that is listed for its capability to provide fire control of specific high-challenge fire hazards.

3.3.205.4.3 Corrosion-Resistant Sprinkler. A sprinkler fabricated with corrosion-resistant material, or with special coatings or platings, to be used in an atmosphere that would normally corrode sprinklers.

FAQ [3.3.205.4.3]

Who can apply corrosion-resistant coatings to sprinklers?

A corrosion-resistant sprinkler can be designed with corrosion-resistant materials or, as is common, have a corrosion-resistant coating, such as wax or lead, applied to it. A corrosion-resistant coating can be applied only by the manufacturer except as permitted for the repair of a damaged coating if the damage occurred during installation. The sprinkler manufacturer should be consulted on proper repair procedures.

The sprinkler described in 3.3.205.4.3 is intended for use in specific environments. Corrosion-resistant sprinklers are either covered with a decorative or corrosion-resistant coating or are designed for a specific function. Additional consideration of corrosion resistance should be given to any attached escutcheon. Stainless steel and aluminum escutcheons are often preferred over mild steel in harsh environments.

3.3.205.4.4* Dry Sprinkler. A sprinkler secured in an extension nipple that has a seal at the inlet end to prevent water from entering the nipple until the sprinkler operates.

A.3.3.205.4.4 Dry Sprinkler. Under certain ambient conditions, wet pipe systems having dry pendent (or upright) sprinklers can freeze due to heat loss by conduction. Therefore, due consideration should be given to the amount of heat maintained in the heated space, the length of the nipple in the heated space, and other relevant factors.

Dry sprinklers are intended to extend into an unheated area from a wet pipe system or to be used on a dry pipe system.

Exhibit 3.33 shows a dry pendent sprinkler, a diagram of a flexible dry sprinkler, and a flexible dry sprinkler installed. As with any type of glass bulb sprinkler, when the glass bulb is heated in excess of the marked operating temperature, it fractures. Typically an inner tube, which also serves as an orifice, drops to a predetermined position, allowing the sealing elements to pass through the tube and away from the sprinkler. Water flows through the tube and strikes the deflector, which distributes it in a standard spray pattern. Other mechanical operating mechanisms exist, such as those found in flexible dry sprinklers, but the basic principal remains the same. The dry upright sprinkler is similar to the dry pendent sprinkler, except that the dry upright uses an upright deflector.

EXHIBIT 3.33 *(left) Viking Model E Dry Pendent Sprinkler (Courtesy of Viking Group, Inc.); (right) Diagram and Installation Example of a Flexible Dry Type Sprinkler. (Courtesy of Victaulic®)*

3.3.205.4.5* Early Suppression Fast-Response (ESFR) Sprinkler. A type of fast-response sprinkler that has a thermal element with an RTI of 50 (meters-seconds)$^{1/2}$ or less and is listed for its capability to provide fire suppression of specific high-challenge fire hazards.

ESFR sprinklers are predominantly used to protect storage occupancies. Caution must be exercised to avoid confusing ESFR sprinklers with other types of sprinklers that are equipped with fast-response operating elements. A non-ESFR sprinkler with a fast-response element is not specifically designed to achieve

EDUFIRE.IR

EXHIBIT 3.34 Examples of Various ESFR Pendent Sprinklers. (Viking Group, Inc., and Reliable Automatic Sprinkler Co., Inc.)

fire suppression. The relationship among thermal sensitivity, actual delivered density (ADD), and required delivered density (RDD) needs to be considered.

Several types of ESFR sprinklers available are illustrated in Exhibit 3.34 and Exhibit 3.35. Exhibit 3.34 shows five pendent-type ESFR sprinklers. The sprinklers have nominal K-factors of K-14, K-16.8, K-22.4, K-25.2, and K-28.0. Exhibit 3.35 illustrates an upright ESFR sprinkler with a nominal K-factor of K-14. It is important to note that the installation and discharge criteria for these different ESFR sprinklers are not uniform.

SEE ALSO

Chapters 14 and 23 for additional information on ESFR sprinklers.

A.3.3.205.4.5 Early Suppression Fast-Response (ESFR) Sprinkler. It is important to realize that the effectiveness of these highly tested and engineered sprinklers depends on the combination of fast response and the quality and uniformity of the sprinkler discharge. It should also be realized that ESFR sprinklers cannot be relied upon to provide fire control, let alone suppression, if they are used outside the guidelines specified in Chapter 20.

3.3.205.4.6 Extended Coverage Sprinkler. A type of spray sprinkler with maximum coverage areas as specified in Sections 11.2 and 11.3.

EXHIBIT 3.35 Upright-Type ESFR Sprinkler. (Courtesy of Viking Group, Inc.)

The extended coverage (EC) sprinkler is available in pendent, upright, and sidewall configurations. The advantage of EC sprinklers is that their areas of coverage are greater than those established for standard spray upright, pendent, and sidewall sprinklers. Exhibit 3.36 and Exhibit 3.37 illustrate various types of EC sprinklers. EC sprinklers can look similar to standard coverage sprinklers, so the listing information should be consulted to confirm that the sprinklers used are, in fact, EC sprinklers.

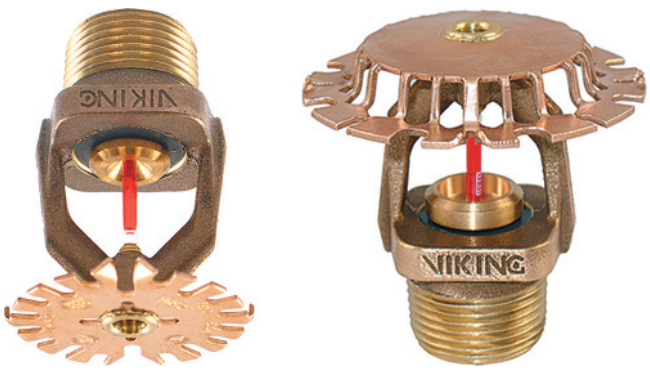

EXHIBIT 3.36 EC Sprinklers. (Courtesy of Viking Group, Inc.)

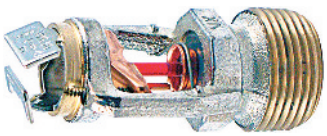

EXHIBIT 3.37 Sidewall-Type EC Sprinkler. (Courtesy of Viking Group, Inc.)

3.3.205.4.7 Institutional Sprinkler. A sprinkler specially designed for resistance to load-bearing purposes and with components not readily converted for use as weapons.

EDUFIRE.IR

CLOSER LOOK [3.3.205.4.5]

Understanding ESFR Sprinklers

The early suppression fast-response (ESFR) sprinkler evolved from examination of the combined effects of sprinkler sensitivity and water distribution characteristics to achieve early fire suppression. The ESFR concept is that if a sufficient amount of water is applied to the burning fuel during the early phases of a fire and penetrates the developing fire plume, then fire suppression can be achieved. Once the fire plume reaches velocities that keep the water droplets from reaching the burning fuel, the likelihood of suppression is greatly reduced.

A fast and hot fire plume can frustrate suppression efforts in two ways. A strong updraft is characteristic of a severe fire plume, which decreases the amount of water that can reach the burning area. Water droplets traveling through this fire plume either are vaporized before they reach the fire or are blown away from the fire. A severe fire plume can also cause sprinklers distant from the fire area to open. These excessive sprinkler actuators result in a decreased amount of water being delivered from the sprinklers nearest to the fire. Since the discharge from sprinklers operating at a distance from the fire source cannot reach the fire or pre-wet the area immediately around it, those sprinklers do not help to achieve fire suppression.

Because other types of sprinklers operate more slowly and do not have the same water distribution characteristics as ESFR sprinklers, sprinklers such as spray sprinklers operate on the concept of fire control. With spray sprinklers, a more significant fire plume develops prior to the operation of the first sprinkler. The intensity of the fire can also remain at an elevated state until fire control is achieved. The concept of fire control is to provide sufficient sprinkler discharge, so that the fire does not spread beyond the sprinkler system design area. Spray sprinklers are expected to prevent the fire from spreading by slowly reducing its intensity and by sufficiently pre-wetting the surrounding combustibles so they do not ignite. Concurrently, the sprinkler discharge is expected to absorb heat and cool the surrounding space, including the area containing structural members, thus preventing building collapse.

ESFR sprinklers, in contrast to standard sprinklers, operate earlier in the fire and provide adequate discharge to suppress the fire before a severe fire plume develops. In principle, early suppression is determined by three factors:

1. Thermal sensitivity
2. Required delivered density (RDD)
3. Actual delivered density (ADD)

An ESFR sprinkler must possess specific properties related to these three factors, and systems that have not been designed to address all of these factors cannot be relied on to achieve early fire suppression. All three factors can be independently measured.

Thermal sensitivity is a measurable expression of the sensitivity or responsiveness of a sprinkler's operating element when exposed to fire conditions. The most common measure of thermal sensitivity is the RTI, as indicated in the commentary following A.3.3.205.2. The more responsive the element is to the effects of a fire, the lower the RTI value. The RTI of a sprinkler generally varies little with the sprinkler's temperature rating.

A sprinkler's response time for a given fire situation is a function of the thermal sensitivity of its operating element, its temperature rating, and its distance relative to the fire. Because of the thermal lag associated with the mass of the operating element, the gas temperature near the sprinkler can reach a value that is higher than the temperature rating of the sprinkler prior to the activation of the sprinkler. This phenomenon can negatively affect the ability of a sprinkler with a high RTI to achieve early fire suppression, because the fire has had a chance to develop a significant fire plume before the activation of the first sprinkler.

Smaller fires are generally easier to suppress than larger ones. The sooner the sprinkler operates, the less water is needed to suppress the fire. For sprinklers with the same temperature rating, those with a lower RTI value will operate sooner in a rapidly growing fire than sprinklers with a higher RTI value.

Required delivered density (RDD) is the measure of the amount of water needed to suppress a fire. The value of RDD depends on the size of the fire at the time of sprinkler operation.

Actual delivered density (ADD) is a measurement of the amount of water discharged from the sprinklers that actually reaches the fire. ADD is determined during a fire test by measuring the amount of water that collects in a pan on the top horizontal

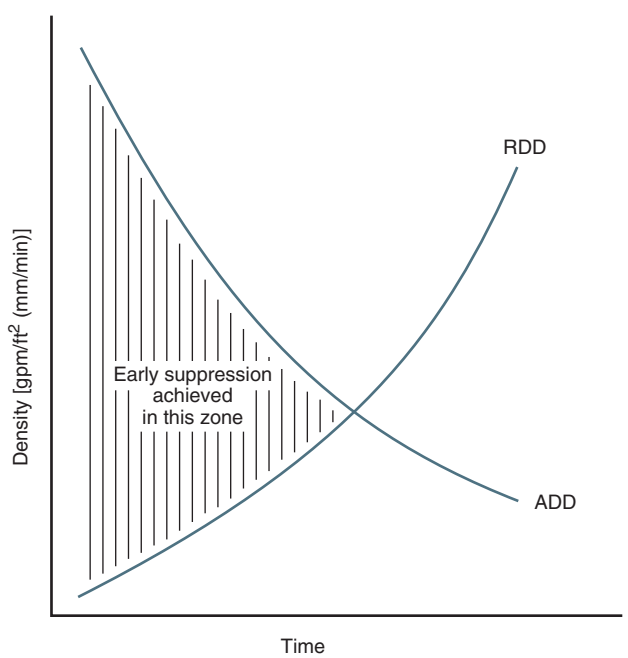

Generalized RDD-ADD Relationship.

(continues)

EDUFIRE.IR

CLOSER LOOK [3.3.205.2] *(Continued.)*

surface of a burning combustible array. ADD is a means of characterizing a sprinkler's distribution pattern and droplet penetration capability during a fire event. The longer it takes a sprinkler to actuate, the faster the fire grows and the smaller the value of ADD. ADD is a function of fire plume velocity, water drop momentum and size, and the distance the water drops must travel from the sprinkler.

RTI, RDD, and ADD are the controlling factors that define the time-dependent nature of early fire suppression. In theory, the earlier the water is applied to a growing fire, the lower the RDD will be and the higher the ADD will be. In other words, the faster the sprinkler response (lower RTI), the lower the RDD will be and the higher the ADD will be. Conversely, the later the water is applied (higher RTI), the higher the RDD will be and the lower the ADD will be. When the ADD is less than the RDD, the sprinkler discharge is no longer effective enough to achieve early fire suppression. Thus, early fire suppression clearly depends on the correct installation of ESFR sprinklers that have been shown to meet the performance criteria related to the RTI, ADD, and RDD factors for the hazard being protected.

The accompanying exhibit shows the generalized concept that early suppression is achieved when the ADD exceeds the RDD. Implicit in the preceding theory is the expectation that water discharging from the first operating ESFR sprinkler reaches the burning material. It is critical with suppression mode sprinklers that the requirements of Chapter 14 be followed to minimize obstructions.

EXHIBIT 3.38 Example of an Institutional Sprinkler. (Courtesy of Tyco Fire Protection Products)

Exhibit 3.38 illustrates an example of a sprinkler that can be used in institutional occupancies, such as prisons.

3.3.205.4.8 Intermediate-Level Sprinkler/Rack Storage Sprinkler. A sprinkler equipped with integral shields to protect its operating elements from the discharge of sprinklers installed at higher elevations.

3.3.205.4.9 Nozzle. A device for use in applications requiring special water discharge patterns, directional spray, or other unusual discharge characteristics.

Nozzles, such as the one shown in Exhibit 3.39, are special application devices that have unique characteristics designed to meet specific needs. These devices are equipped with heat-responsive elements or are open to the atmosphere. Nozzles are designed to spray water in a specific direction. NFPA 15, *Standard for Water Spray Fixed Systems for Fire Protection,* provides more information on systems using these devices. An installation where part of a building sprinkler system is protecting a duct is an example of where nozzles could be used as part of a NFPA 13 system.

EXHIBIT 3.39 Grinnell Automatic Protectospray™ Nozzle. (Courtesy of Tyco Fire Protection Products)

3.3.205.4.10 Old-Style/Conventional Sprinkler. A sprinkler that directs from 40 percent to 60 percent of the total water initially in a downward direction and that is designed to be installed with the deflector either upright or pendent.

Old-style/conventional sprinklers, whether installed upright or pendent, direct approximately 40 percent of their water discharge up against the ceiling, with the remaining discharge directed downward. Spray sprinklers direct 100 percent of their water discharge downward. A comparison of the two spray patterns is shown in Exhibit 3.40.

Old-style/conventional sprinklers were predominantly used in North America prior to the development of spray sprinklers. The major difference between old-style/conventional and standard spray sprinklers is the design of their deflectors. Old-style/conventional sprinklers are still available and used in Europe. These sprinklers are also used in North America for special applications in which an upward sprinkler discharge is desired, such as for protection in fur storage vaults and for pier and wharf protection.

3.3.205.4.11 Open Sprinkler. A sprinkler that does not have actuators or heat-responsive elements.

An open sprinkler, such as the one shown in Exhibit 3.41, is used predominantly on deluge or water spray systems.

3.3.205.4.12 Ornamental/Decorative Sprinkler. A sprinkler that has been painted or plated by the manufacturer.

EDUFIRE.IR

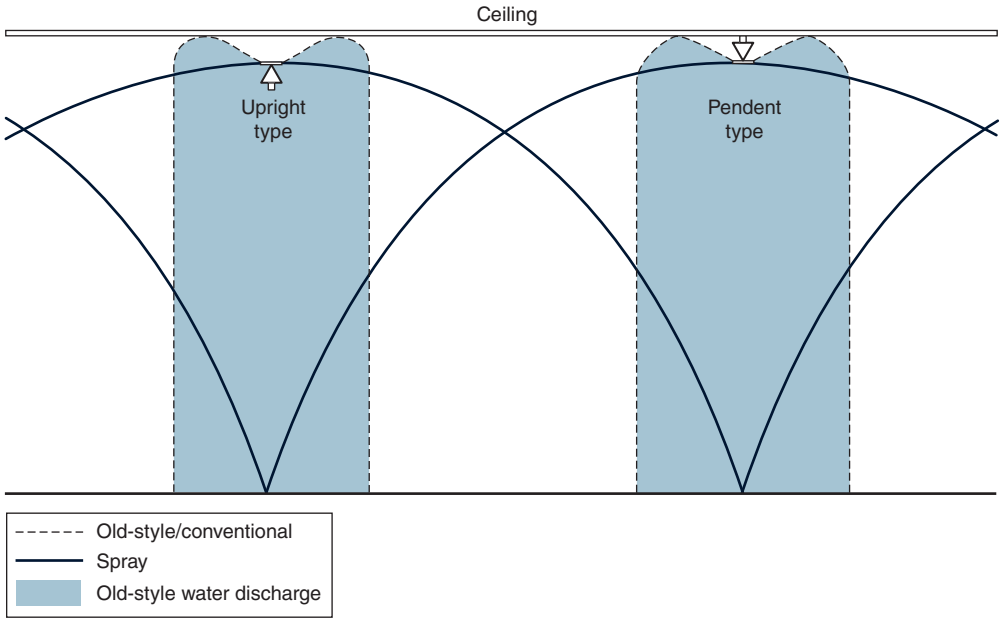

EXHIBIT 3.40 Principal Distribution Patterns of Old-Style Sprinklers Used Before 1953 and Spray Sprinklers Introduced in 1953.

EXHIBIT 3.41 Grinnell Open Sprinkler. (Courtesy of Tyco Fire Protection Products)

An ornamental sprinkler is commonly a sprinkler with a factory-applied paint coating that blends with the color of the interior of the building. Similarly, covers of concealed sprinklers have ornamental factory-applied paint coatings to blend with the color of the wall or ceiling where the sprinkler is installed.

FAQ [3.3.205.4.12]

Who can apply coatings to sprinklers?

As noted in 7.2.5, any coating for decorative or protective purposes must be applied only by the sprinkler manufacturer.

3.3.205.4.13 Pilot Line Detector. A standard spray sprinkler or thermostatic fixed-temperature release device used as a detector to pneumatically or hydraulically release the main valve, controlling the flow of water into a fire protection system.

3.3.205.4.14* Quick-Response Early Suppression (QRES) Sprinkler. A type of quick-response sprinkler that has a thermal element with an RTI of 50 (meter-seconds)$^{1/2}$ or less and is listed for its capability to provide fire suppression of specific fire hazards.

The concept of a quick-response early suppression (QRES) sprinkler was proposed some time ago and is being introduced in NFPA 13 with a definition and annex material. However, the sprinkler does not yet exist. The concept of the QRES sprinkler is based largely on information discovered in developing the ESFR sprinkler. The QRES sprinkler is intended to bring fire suppression to occupancies such as office buildings and manufacturing facilities.

A four-sprinkler design concept was targeted to address overdesign limits and the impact of pressure and water demand. The relevant combinations of fuel load, ceiling height, operating pressure, and sprinkler spacing need to be verified. If any data becomes available and the sprinkler committees are able to review the results, an amendment to NFPA 13 will likely be considered.

A.3.3.205.4.14 Quick-Response Early Suppression (QRES) Sprinkler. Research into the development of QRES sprinklers is continuing under the auspices of the National Fire Protection Research Foundation. It is expected that the proposed design criteria will be added to the standard when a thorough analysis of the test data is completed.

3.3.205.4.15 Quick-Response Extended Coverage Sprinkler. A type of quick-response sprinkler that has a thermal element with an RTI of 50 (meter-seconds)$^{1/2}$ or less and complies with the extended protection areas defined in Chapter 11.

EDUFIRE.IR

EXHIBIT 3.42 Quick-Response EC Sidewall Sprinkler. (Courtesy of Reliable Automatic Sprinkler Co., Inc.)

A quick-response extended coverage (EC) sprinkler is specifically listed as having a fast-response operating element. Some standard-response EC sprinklers use fast-response operating elements to comply with the required response time necessary for the extended area. However, those sprinklers with the quick-response elements must be considered standard-response sprinklers, unless they are specifically listed as quick-response EC sprinklers. Exhibit 3.42 illustrates a type of listed quick-response EC sprinkler.

3.3.205.4.16* Quick-Response (QR) Sprinkler. A type of spray sprinkler that has a thermal element with an RTI of 50 (meter-seconds)$^{1/2}$ or less and is listed as a quick-response sprinkler for its intended use.

A quick-response (QR) sprinkler is similar to a standard spray sprinkler, except that it possesses a fast-response operating element. QR sprinkler technology was developed from residential sprinkler technology. QR sprinklers are tested against the same criteria as standard-response sprinklers. The Closer Look feature and commentary following A.3.3.205.2 provides additional discussion on thermal sensitivity and fast-response technology. See Exhibit 3.26, which shows a glass bulb–type QR sprinkler; the nozzle in Exhibit 3.42 is equipped with a standard-response glass bulb. The difference in the size of the operating elements of QR sprinklers and standard-response sprinklers should be noted. Where glass bulbs are used for standard spray sprinklers, the diameter of the bulb of a QR sprinkler is typically less than that of a standard-response sprinkler. Where a metallic alloy is used, the operating heat responsive element of a standard-response sprinkler has more mass than the element used in a QR sprinkler.

A.3.3.205.4.16 Quick-Response (QR) Sprinkler. Quick response is a listing for sprinklers that combines the deflector, frame, and body of a spray sprinkler with a fast-response element *[see 3.3.205.2(1)(a)]* to create a technology that will respond quickly in the event of a fire and deliver water in the same fashion as other types of spray sprinklers.

3.3.205.4.17 Residential Sprinkler. A type of fast-response sprinkler having a thermal element with an RTI of 50 (meters-seconds)$^{1/2}$ or less that has been specifically investigated for its ability to enhance survivability in the room of fire origin and that is listed for use in the protection of dwelling units.

EXHIBIT 3.43 Viking Listed Residential Sprinkler. (Courtesy of Viking Group, Inc.)

Residential sprinklers are tested for their ability to meet a specified life safety criterion. This criterion includes temperature, oxygen, and carbon monoxide levels measured at a height 5 ft (1.5 m) above the floor. Residential sprinklers are installed to provide a tenable space for a period of time necessary for an occupant to evacuate. Additionally, these sprinklers are intended to protect persons in the room of fire origin who are not intimate with ignition. This sprinkler possesses a fast-response operating element and produces a spray pattern that discharges water higher than the standard spray sprinkler. Exhibit 3.43 shows a listed residential sprinkler.

3.3.205.4.18 Special Sprinkler. A sprinkler that has been tested and listed as prescribed in Section 15.2.

NFPA 13 provides detailed information for a special sprinkler. Because it is usually intended to protect specific hazards or construction features, this type of sprinkler does not fall into the other categories. Special sprinklers must be evaluated and listed for their intended purpose. Fire test performance, spray pattern distribution with respect to the wetting of both walls and floors, operation with obstructions, thermal sensitivity, and performance under horizontal or sloped ceilings all need to be considered. While a good deal of latitude is provided for the development of special sprinklers, their K-factors and temperature ratings must comply with the provisions identified by NFPA 13. Also, their maximum area of coverage cannot exceed 400 ft^2 (37.2 m^2) for light and ordinary hazard occupancies and 196 ft^2 (18.2 m^2) for extra hazard occupancies and high-piled storage applications.

3.3.205.4.19 Spray Sprinkler. A type of sprinkler listed for its capability to provide fire control for a wide range of fire hazards.

The spray sprinkler was introduced in the early 1950s and was the successor to the old-style/conventional sprinkler. The old-style sprinkler continues to serve the sprinkler industry. Standard spray pendent, upright,

EDUFIRE.IR

and sidewall sprinklers, as well as extended coverage pendent, upright, and sidewall sprinklers, are categories of spray sprinklers.

3.3.205.4.20 Standard Spray Sprinkler. A spray sprinkler with maximum coverage areas as specified in Sections 10.2 and 10.3.

The standard spray sprinkler is installed in accordance with the coverage area limitations in Chapter 10 and is available in pendent, upright, and sidewall configurations. Because the standard spray sprinkler is proven to be effective for a broad range of hazards and applications by adjusting the water discharge density, it is popular and, to a certain degree, serves as the benchmark for sprinkler measurement and performance. Exhibit 3.44 illustrates a standard spray pendent sprinkler and a standard spray upright sprinkler.

EXHIBIT 3.44 *Examples of Standard Spray Pendent Sprinkler (top) and Upright Sprinkler (bottom). (Courtesy of Reliable Automatic Sprinkler Co., Inc.)*

3.3.206* Sprinkler System. A system, commonly activated by heat from a fire and discharges water over the fire area, that consists of an integrated network of piping designed in accordance with fire protection engineering standards that includes a water supply source, a water control valve, a waterflow alarm, and a drain. The portion of the sprinkler system above ground is a network of specifically sized or hydraulically designed piping installed in a building, structure, or area, generally overhead, and to which sprinklers are attached in a systematic pattern.

It is important to note that the sprinkler system is a piping network that includes water supplies and underground piping. Although design and installation requirements for tanks and pumps are covered by other standards, these components are used in connection with sprinkler piping and are considered an integral part of the sprinkler system. Tanks and pumps are critical to successful sprinkler system performance and must be given serious consideration.

The definition for *sprinkler system* was revised for the 2013 edition to help clarify the system boundaries with respect to NFPA 13 and for maintenance purposes with respect to NFPA 25. Based on this revision, each system riser serving a portion of a single floor of a facility, or the portion(s) of the piping network in multistory buildings where floor control valve assemblies are used to isolate individual floors is considered a sprinkler system. Multiple sprinkler systems can be supplied by a common supply main or header in a single story building or by a riser or standpipe in multistory buildings.

A.3.3.206 Sprinkler System. As applied to the definition of a sprinkler system, each system riser serving a portion of a single floor of a facility or where individual floor control valves are used in a multistory building should be considered a separate sprinkler system. Multiple sprinkler systems can be supplied by a common supply main.

3.3.206.1 Antifreeze Sprinkler System. A wet pipe system using automatic sprinklers that contains a liquid solution to prevent freezing of the system, intended to discharge the solution upon sprinkler operation, followed immediately by water from a water supply.

The section of NFPA 13 on antifreeze systems has a very limited application at the time of the printing of this handbook. Extensive testing has determined that the propylene glycol and glycerine solutions used in recent years contribute to the heat release rate of a fire, and these solutions are no longer allowed in new sprinkler systems. NFPA 13 now requires the use of listed antifreeze solutions, and so far a listing has not been issued. The rules are still in the standard in the event that a listed antifreeze solution becomes available.

The definition for the term *antifreeze sprinkler system* clearly indicates that water immediately follows discharge of the antifreeze solution, thus making systems where the entire water supply consists of antifreeze solution outside the scope of systems described in this standard. An antifreeze loop or piping can consist of an auxiliary antifreeze system that is equipped with a separate control valve, drains, and other components. The combined antifreeze portion and water portion of the system must satisfy all appropriate requirements, such as those pertaining to protection area limitations and hydraulic calculations, for the wet pipe system. In addition, all requirements for the antifreeze system must also be satisfied. Alarms on the wet pipe system might not be adequate for the auxiliary system, necessitating additional alarms.

The use of antifreeze systems can also be regulated by the municipal water department due to the potential health effects of the solutions. Recent revisions to NFPA 13 require the use of a listed antifreeze solution and have eliminated all types of antifreeze except for antifreeze consisting of propylene glycol and

EDUFIRE.IR

glycerin in special, approved applications. Because both materials are commonly used in food applications, their use should limit concerns about potential health effect issues. See Section 8.6 for specific requirements pertaining to antifreeze systems and 27.2.2.1.3 for requirements for calculating antifreeze systems greater than 40 gal (150 L) utilizing the Darcy-Weisbach formula.

3.3.206.2 Combined Dry Pipe–Reaction Sprinkler System. A sprinkler system employing automatic sprinklers attached to a piping system containing air under pressure with a supplemental detection system installed in the same areas as the sprinklers. Operation of the detection system actuates tripping devices that open dry pipe valves simultaneously and without loss of air pressure in the system. The detection system also serves as an automatic fire alarm system.

A combined dry pipe–preaction sprinkler system (also see Section 8.4) is employed primarily where more than one dry pipe system is required due to the size of the space and where the installation of supply piping to each dry pipe valve through a heated or protected space is not possible. Primary examples of where combined dry pipe–preaction systems are used include piers, wharves, and very large cold storage warehouses. These systems are special application systems and should be used as such. Many cold storage rooms can be adequately protected with a conventional dry pipe system or a double interlock preaction system.

FAQ [3.3.206.4]

Where are dry pipe sprinkler systems required?

A dry pipe sprinkler system should be installed only where pipe is subject to freezing. Paragraph 16.4.1.1 indicates that a dry pipe system is one option permitted to protect against the system freezing where the building environment cannot be maintained at or above 40°F (4°C).

Dry pipe systems should not be used to reduce water damage from pipe breakage or leakage, since they operate too quickly to be of value for that purpose. A single or double interlock preaction system should be used in that case.

A dry pipe system's piping is typically filled with pressurized air or nitrogen and is activated when a drop in the system piping pressure occurs. A drop in pressure can be caused by the activation of a single sprinkler or by damage to the sprinkler system piping. A drop in pressure causes the dry pipe valve to open and allows water to flow through the system piping.

3.3.206.3 Deluge Sprinkler System. A sprinkler system employing open sprinklers or nozzles that are attached to a piping system that is connected to a water supply through a valve that is opened by the operation of a detection system installed in the same areas as the sprinklers or the nozzles. When this valve opens, water flows into the piping system and discharges from all sprinklers or nozzles attached thereto.

A deluge system's mode of activation is similar to that for a preaction system. With the exception of the non-interlock preaction system, the activation of these two types of systems depends on the operation of a supplemental detection system. The difference between the two types of systems is that preaction systems employ automatic sprinklers that respond to heat, and deluge systems use open (nonautomatic) sprinklers or open nozzles. Operation of the detection system in a preaction system fills the system piping with water once certain interlocks are triggered. Water is not discharged from the system until a sprinkler operates. For a deluge system, operation of the detection system results in flow from all system sprinklers or nozzles. Deluge systems are normally used for high hazard areas requiring an immediate application of water over the entire hazard. An aircraft hangar is an example of a facility that is likely to use deluge systems. Exhibit 3.45 illustrates an example of a deluge system using a supplemental electronic heat or smoke detection system.

3.3.206.4 Dry Pipe Sprinkler System. A sprinkler system employing automatic sprinklers that are attached to a piping system containing air or nitrogen under pressure, the release of which (as from the opening of a sprinkler) permits the water pressure to open a valve known as a dry pipe valve, and the water then flows into the piping system and out the opened sprinklers.

Exhibit 3.46 illustrates an example of a dry pipe system.

N ***3.3.206.4.1 Differential Dry Pipe Valve.*** A valve that is held in the closed position by the system gas pressure exposed to the larger surface area on the air/nitrogen side of the clapper where it is at least 5 times that of the surface area on the water supply side.

This definition was added to the 2019 edition to better describe the type of dry pipe valve that requires a high water level switch. There is only one use of this term in NFPA 13, in 8.2.5.4.2. A high water level switch is needed because a high column of water on a clapper with a 5:1 ratio could keep the dry valve from tripping in a fire event.

N ***3.3.206.4.2 Mechanical Dry Pipe Valve.*** A valve that uses a series of mechanical devices such as levers, springs, diaphragms, and latches to hold the valve in the closed position with air/nitrogen pressure and without using the clapper surface areas to provide a differential between air/nitrogen and water pressures.

EDUFIRE.IR

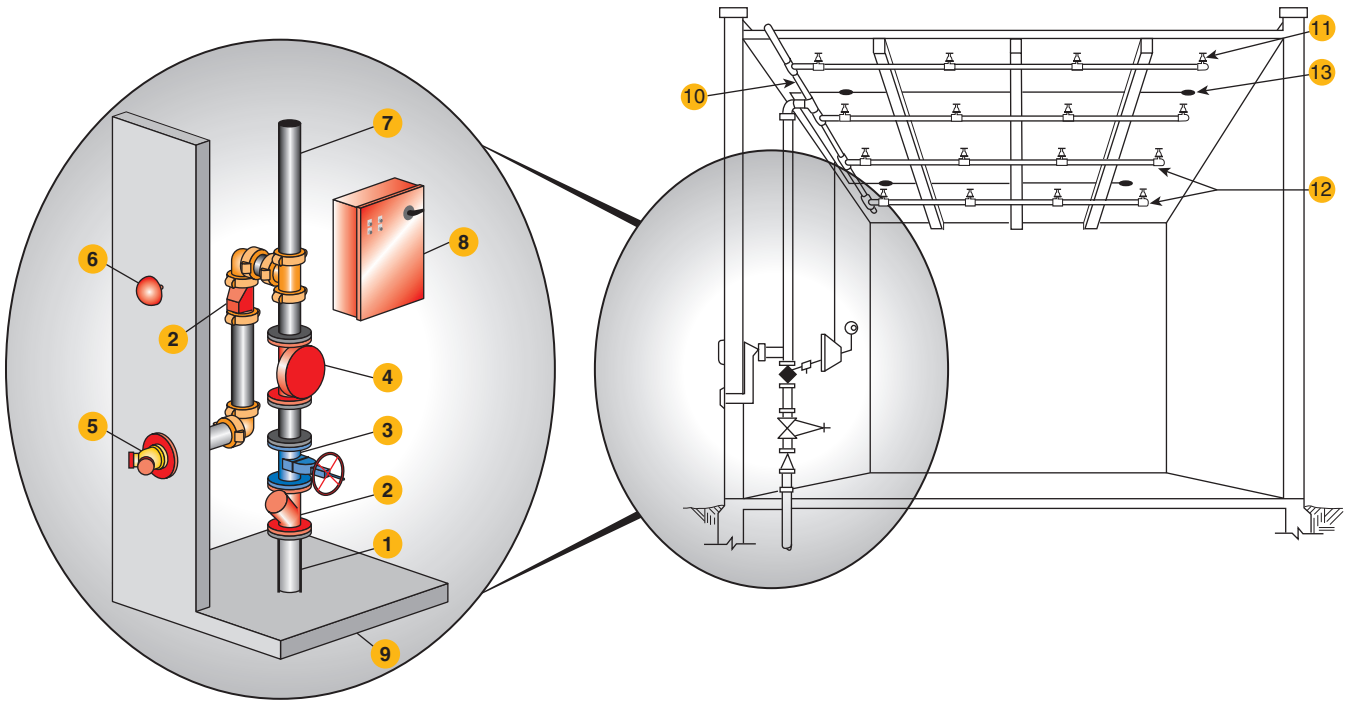

Deluge System Riser Assembly—Equipment Legend	
1 Water supply	5 Fire department connection
2 Check valve	6 Local waterflow alarm
3 OS&Y gate valve to control water supply to system	7 Fire sprinkler bulk feed main—to sprinklers
4 Deluge valve—trim & release equip. not shown (configuration varies between manufacturers)	8 Releasing control panel
	9 Finished floor

Deluge System—Legend
10 Fire sprinkler crossmain
11 Open automatic sprinkler(s)
12 Branch line(s)
13 Detector(s)

EXHIBIT 3.45 *Deluge System. (Courtesy of Stephan Laforest)*

3.3.206.5* Gridded Sprinkler System. A sprinkler system in which parallel cross mains are connected by multiple branch lines, causing an operating sprinkler to receive water from both ends of its branch line while other branch lines help transfer water between cross mains.

A.3.3.206.5 Gridded Sprinkler System. See Figure A.3.3.206.5.

Gridded sprinkler systems are designed to provide a number of flow paths to the sprinklers on branch lines. This multiple-path design reduces the potential for pressure loss through the system piping compared with other system configurations. Due to the complex nature of the hydraulic calculations involved, the use of computer hydraulic programs is almost always necessary in evaluating the piping grid and determining the pressure requirements of the system.

Although the gridded system possesses highly advantageous hydraulic characteristics, certain limitations and design conditions are associated with its use. For example, gridded systems are not permitted for dry pipe systems and certain preaction systems, because excessive amounts of air can remain trapped in the system piping, which significantly delays water from reaching the operating sprinklers (see 8.2.3.10 and 8.3.2.6). Gridded system designs must also include additional verification that the hydraulically most demanding combination of sprinklers was selected (see 27.2.4.5).

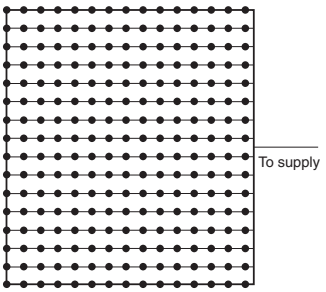

FIGURE A.3.3.206.5 *Gridded System.*

EDUFIRE.IR

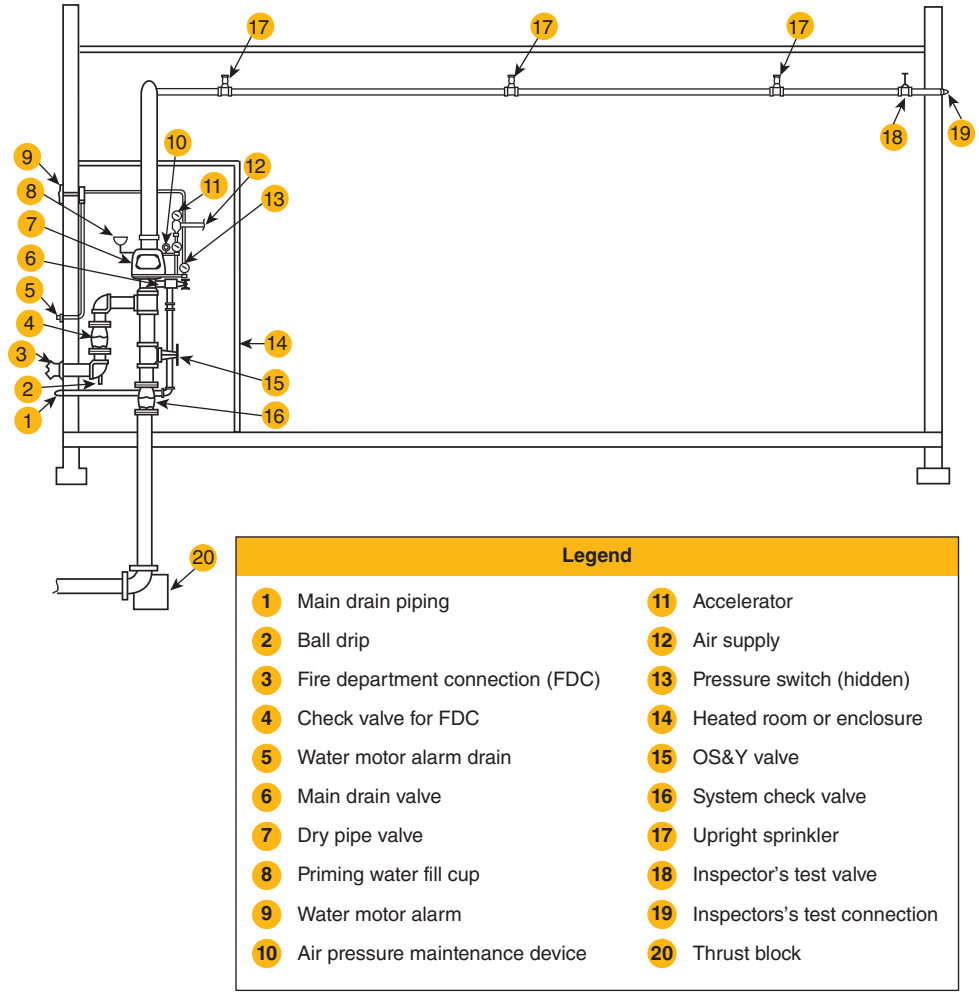

EXHIBIT 3.46 *Dry Pipe System. (Courtesy of Viking Group, Inc.)*

3.3.206.6* Looped Sprinkler System. A sprinkler system in which multiple cross mains are tied together so as to provide more than one path for water to flow to an operating sprinkler and branch lines are not tied together.

A looped sprinkler system possesses better hydraulic characteristics than does a tree system. Tree systems are the most basic system of sprinkler pipe layout: the cross mains and the branch lines are not tied together, providing only one path for the water to flow to an operating sprinkler. While looped systems hydraulically perform better than tree systems, their hydraulic characteristics are not as good as those of a gridded system. The hydraulic calculations associated with a looped system are not as complicated as those for a gridded system. Additionally, looped systems do not have the same limitations and design considerations as do gridded systems.

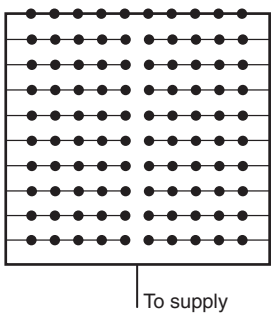

FIGURE A.3.3.206.6 *Looped System.*

A.3.3.206.6 Looped Sprinkler System. See Figure A.3.3.206.6.

3.3.206.7 Multicycle System. A type of sprinkler system capable of repeated on–off flow cycles in response to heat.

3.3.206.8 Pipe Schedule System. A sprinkler system in which the pipe sizing is selected from a schedule that is determined by the occupancy classification and in which a given number of sprinklers are allowed to be supplied from specific sizes of pipe.

EDUFIRE.IR

A pipe schedule system is the oldest sprinkler system design approach, dating back to the first edition of NFPA 13, in 1896. For more information on pipe schedule systems, see the commentary following 19.3.2.

3.3.206.9* Preaction Sprinkler System. A sprinkler system employing automatic sprinklers that are attached to a piping system that contains air that might or might not be under pressure, with a supplemental detection system installed in the same areas as the sprinklers.

The three types of preaction systems are specified in 8.3.2.1. The user should be aware that the double interlock version is subject to the same time-delay problems as a dry pipe system and, likewise, is subject to comparable dry pipe system limitations.

FAQ [3.3.206.9]

Where are double interlock preaction systems normally used?

Double interlock preaction systems normally are used to protect properties where accidental water discharge is a significant concern. Even though accidental or premature discharge of sprinkler systems is extremely rare, some property owners prefer these systems in areas such as electronic equipment areas.

Exhibit 3.47 shows an example of a preaction system with electric activation. Preaction systems can also be activated through pneumatic means using a pneumatic pilot line detector and piping. Section 8.3 addresses the requirements for preaction systems.

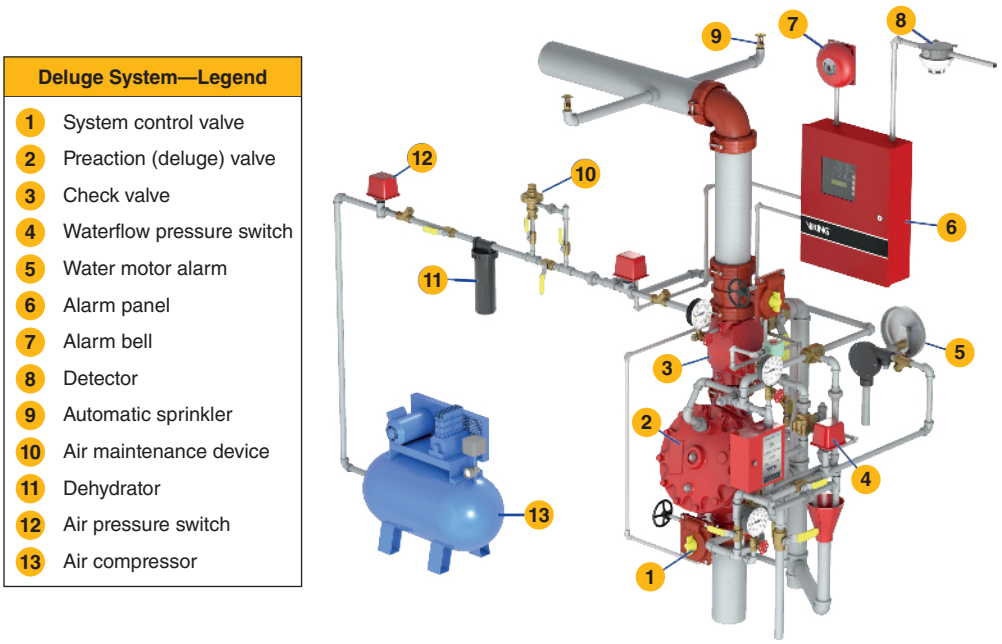

EXHIBIT 3.47 Example of Preaction System. (Courtesy of Viking Group, Inc.)

A.3.3.206.9 Preaction Sprinkler System. The actuating means of the valve are described in 8.3.2.1. Actuation of the detection system and sprinklers in the case of double-interlocked systems opens a valve that permits water to flow into the sprinkler piping system and to be discharged from any sprinklers that are open.

3.3.206.10 Wet Pipe Sprinkler System. A sprinkler system employing automatic sprinklers attached to a piping system containing water and connected to a water supply so that water discharges immediately from sprinklers opened by heat from a fire.

A wet pipe sprinkler system is the simplest and most reliable of all sprinkler system types. Operation of one sprinkler activates a wet pipe system. Only those sprinklers activated by the heat from fire will discharge water. Exhibit 3.48 illustrates an example of a wet pipe system using an alarm check valve. Section 8.1 addresses requirements for wet pipe systems.

All other types of systems addressed by NFPA 13 require the use of additional equipment, such as dry pipe valves, preaction valves, or supplemental detectors, for successful operation. As the number of events needed for system activation increases — that is, the activation of both sprinklers and heat detectors or the use of more elaborate devices such as dry pipe valves — the greater the need for a comprehensive inspection, testing, and maintenance program. In other words, the more complicated a

EDUFIRE.IR

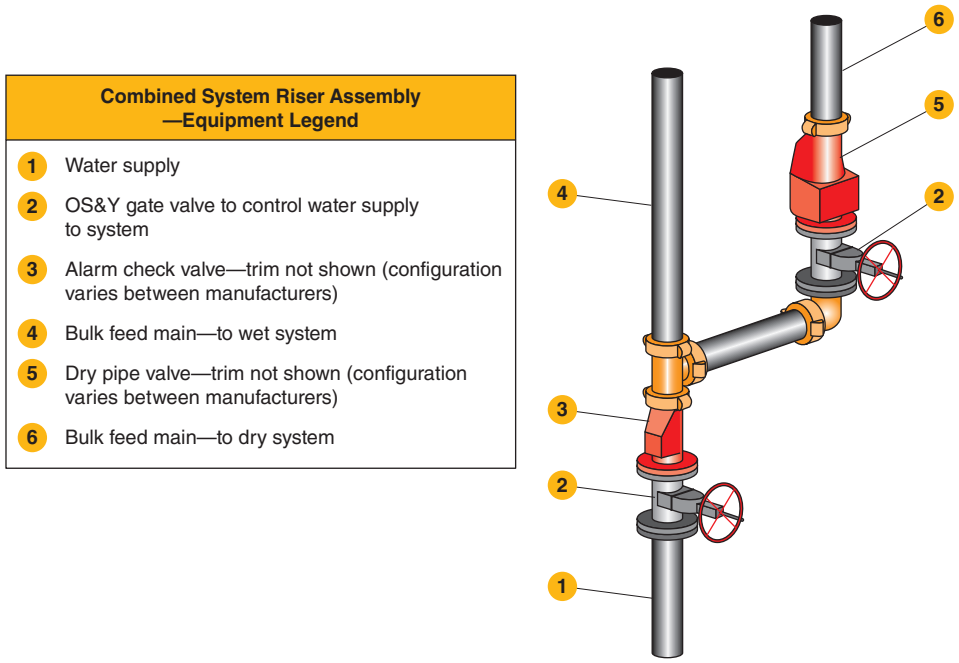

EXHIBIT 3.48 Wet Pipe Sprinkler Riser with Alarm Check Valve. (Courtesy of Stephan Laforest)

system, the greater the likelihood that something can go wrong and the greater the effort needed to keep the system in proper working order.

Wet pipe systems should always be the first type of system considered. Only in cases where a wet pipe system cannot properly protect a space should another type of system be contemplated. For example, a wet pipe system is not a good candidate for a cold storage room, because the cold temperature is likely to cause the water in the sprinkler piping to freeze, resulting in damage to the piping and impairment of the sprinkler system. Therefore, a dry pipe or an antifreeze system is a better choice for the protection of cold storage rooms.

3.3.207 S_s. The maximum considered earthquake ground motion for 0.2-second spectral response acceleration (5 percent of critical damping), site Class B for a specific site.

3.3.208 Standard Array (Rolled Paper). See 3.3.8.5.

3.3.209 Standard Spray Sprinkler. See 3.3.205.4.20.

3.3.210 Static Pressure. The pressure that exists at a given point under normal distribution system conditions measured at the residual hydrant with no hydrants flowing. [**24,** 2019]

3.3.211 Storage Aids. Commodity storage devices, such as pallets, dunnage, separators, and skids.

3.3.212 Supervision (Marine System). See 3.3.119.11.

3.3.213 Supervisory Device. A device arranged to supervise the operative condition of automatic sprinkler systems.

NFPA 13 requires that certain elements and conditions of the sprinkler system be supervised to decrease the likelihood of system impairment. For example, a planned or inadvertent closure of one of the valves that controls the water supply to the sprinkler system would render the system inoperative. Therefore, these valves must be supervised.

Although several means of valve supervision are permitted by NFPA 13, a more sophisticated means includes the use of an electronically monitored tamper switch that sounds an alarm at a constantly

EDUFIRE.IR

attended location. The installation of this type of device is addressed by *NFPA 72®, National Fire Alarm and Signaling Code®*. Other system conditions that are required to be supervised include the air pressure in a dry pipe or preaction system and the water temperature in a circulating closed-loop system.

3.3.214 Survival Angle. See 3.3.119.12.

3.3.215 System Riser. The aboveground horizontal or vertical pipe between the water supply and the mains (cross or feed) that contains a control valve (either directly or within its supply pipe), a pressure gauge, a drain, and a waterflow alarm device.

A system riser is more than just a subset of the term *riser,* which is broadly defined as any vertical piping within the sprinkler system.

FAQ [3.3.215]

Must a system riser be vertical to be defined as a system riser?

As indicated by the definition, a system riser can be any aboveground pipe in a vertical or horizontal orientation installed between the water supply and the system mains that contains specific devices.

3.3.216 System Working Pressure. The maximum anticipated static (nonflowing) or flowing pressure applied to sprinkler system components exclusive of surge pressures and exclusive of pressure from the fire department connection.

The term *system working pressure* applies to the maximum pressure that the system is expected to be exposed to under normal circumstances. All components of the sprinkler system should be rated for operating pressures at or above the system working pressure. Transient pressure spikes (surge pressure) and elevated pressure pumped into the system during fire department operations are not taken into consideration for the purposes of defining the system working pressure.

3.3.217 Sway Brace. An assembly intended to be attached to the system piping to resist horizontal earthquake loads in two directions.

3.3.218 Thermal Barrier. A material that limits the average temperature rise of the unexposed surface to not more than 250°F (121°C) above ambient for a specified fire exposure duration using the standard time–temperature curve of ASTM E119, *Standard Test Methods for Fire Tests of Building Construction and Materials*, or UL 263, *Standard for Fire Tests of Building Construction and Materials*.

The term *thermal barrier* is used in 9.2.4.1.1 to establish a condition necessary to omit sprinklers from certain types of dwelling unit bathrooms.

3.3.219* Tiered Storage (Baled Cotton). An arrangement in which bales are stored directly on the floor, two or more bales high.

A.3.3.219 Tiered Storage (Baled Cotton). Untiered storage limits storage to the height of one bale, on side or on end. Sprinkler protection designed on this basis would likely prohibit future tiering without redesign of the sprinkler system.

3.3.220 Transverse Flue Space. The space between rows of storage parallel to the direction of loading. *(See Figure A.3.3.116.)*

NFPA 13 defines the minimum width of a transverse flue space as 6 in. (150 mm). This minimum width is intended to promote the heat from a fire to vent vertically, as opposed to travelling horizontally. This in turn allows sprinklers to operate as quickly as possible and reduces the potential of horizontal fire spread.

It should be noted that most full-scale fire tests conducted at the testing labs are conducted with 6 in. (150 mm) wide transverse flue spaces. As a result, testing conducted with in-rack sprinklers installed in the transverse flue space have the in-rack sprinklers located only 3 in. (75 mm) horizontally away from the nearest pallet load. A minimum vertical clearance of 6 in. (150 mm) between the top of storage and the in-rack sprinkler deflector allows for direct sprinkler discharge to the top of the pallet load, thus allowing for water discharge, in theory, to all vertical surfaces of the pallet load. As the transverse flue space becomes wider, less sprinkler discharge will reach the top of the pallet loads if the vertical clearance is not changed. Therefore, if in-rack sprinklers are required within the transverse flue space of a storage rack, consideration should be given to providing as much vertical clearance between the top

EDUFIRE.IR

of storage and the in-rack sprinkler deflector as possible where the width of the transverse flue space exceeds 6 in. (150 mm).

3.3.221 Type 1 Stair. See 3.3.119.13.

3.3.222 Unit Load. A pallet load or module held together in some manner and normally transported by material-handling equipment.

3.3.223 Unobstructed Construction. See 3.3.41.2.

3.3.224 Upright Sprinkler. See 3.3.205.3.6.

3.3.225 Vertical Roll Paper Storage. See 3.3.182.4.

3.3.226 Waterflow Alarm Device. An attachment to the sprinkler system that detects a predetermined water flow and is connected to a fire alarm system to initiate an alarm condition or is used to mechanically or electrically initiate a fire pump or local audible or visual alarm.

References Cited in Commentary

National Fire Protection Association, 1 Batterymarch Park, Quincy, MA 02169-7471.

NFPA 13D, *Standard for the Installation of Sprinkler Systems in One- and Two-Family Dwellings and Manufactured Homes*, 2019 edition.

NFPA 13R, *Standard for the Installation of Sprinkler Systems in Low-Rise Residential Occupancies*, 2019 edition.

NFPA 15, *Standard for Water Spray Fixed Systems for Fire Protection*, 2017 edition.

NFPA 24, *Standard for the Installation of Private Fire Service Mains and Their Appurtenances*, 2019 edition.

NFPA 25, *Standard for Inspection, Testing, and Maintenance of Water-Based Fire Protection Systems*, 2017 edition.

NFPA 30B, *Code for the Manufacture and Storage of Aerosol Products*, 2019 edition.

NFPA 72®, National Fire Alarm and Signaling Code, 2019 edition.

NFPA 204, *Standard for Smoke and Heat Venting*, 2018 edition.

NFPA 220, *Standard of Types of Building Construction*, 2018 edition.

NFPA 1963, *Standard for Fire Hose Connections*, 2014 edition.

American Fire Sprinkler Association, 12750 Merit Drive, Suite 350, Dallas, TX 75251.

"The Impact of 8 in. Lintels on Sprinkler Activation within Small Rooms," February 2005.

ASTM International, 100 Barr Harbor Drive, P.O. Box C700, West Conshohocken, PA 19428-2959.

ASTM E119, *Standard Test Methods for Fire Tests of Building Construction and Materials*, 2018.

Fire Protection Research Foundation, 1 Batterymarch Park, Quincy, MA 02169-7471.

"Evaluation of Sprinkler Performance in Protecting Gondola Type Shelf Storage," September 2006.

"Antifreeze Solutions in Home Fire Sprinklers — Literature Review and Research Plan," June 2010.

"Antifreeze Solutions in Home Fire Sprinklers — Phase II Research Final Report," December 2010.

FM Global, 270 Central Avenue, P.O. Box 7500, Johnston, RI 02919-4923.

Class 2000 – Approval Standard for Automatic Sprinklers for Fire Protection, 2018.

Class 2008 – Approval Standard for Quick Response Storage Sprinklers for Fire Protection, 2018.

Class 2030 – Approval Standard for Residentail Automatic Sprinklers for Fire Protection, 2009.

Underwriters Laboratories Inc., 333 Pfingsten Road, Northbrook, IL 60062-2096.

UL 199, *Standard for Automatic Sprinklers for Fire-Protection Service*, 2017.

UL 1626, *Standard for Residential Sprinklers for Fire-Protection Service*, 2017.

UL 1767, *Standard for Early-Suppression Fast-Response Sprinklers*, 2015.

EDUFIRE.IR

CHAPTER

4

General Requirements

REORGANIZATION NOTE

Chapter 4 has been revised for 2019 to truly contain the general information needed for a fire sprinkler system. It begins with the expected level of protection and goes on to cover the owner's certificate, as it has in previous editions. It now includes occupancy classification, as that is the primary step necessary in the layout and detail of a fire sprinkler system. Miscellaneous and low-piled storage have been incorporated into the occupancy classifications so that the user stays in the occupancy requirements for protection, eliminating the confusion with applying design methods and other criteria. High-piled storage is mentioned only as a pointer to the storage chapters. Limitations on system size also have been moved into Chapter 4.

Chapter 4 contains the general requirements that apply to all of NFPA 13 and, in general, all systems designed and installed in accordance with NFPA 13. Chapter 20, General Requirements for Storage, provides additional requirements that apply specifically to design and installation requirements for storage occupancies. Items covered include level of protection, limited area systems, owner's certificate, the prohibited use of additives for stopping leaks in sprinkler systems, the use of air or nitrogen, and the support of components not included in the sprinkler system. Much of the information in Chapter 4 is addressed in other sections of the standard, but emphasizing this information in this chapter was deemed appropriate by the technical committee on sprinkler system discharge.

4.1 Level of Protection.

4.1.1 A building, where protected by an automatic sprinkler system installation, shall be provided with sprinklers in all areas except where specific sections of this standard permit the omission of sprinklers.

The oldest and most important design concept of NFPA 13 is that sprinklers must be installed in all areas of a building. This requirement dates back to the first edition of NFPA 13, published in 1896, which contained the statement "sprinklers to be placed throughout premises" in the section on location and arrangement of sprinklers. This philosophy is part of the original insurance-based approach toward risk and levels of protection that founded the standard. To truly minimize risk, the entire building must be protected. However, insurance is no longer the primary driver for requiring sprinkler protection in the built environment. That role has shifted over time to the building and fire codes. It is possible to have a mixed occupancy building that is fully compliant with the building code and only have one of the occupancies sprinklered. When this occurs, it should not be viewed as a limited area system, and NFPA 13 should be applied in its entirety throughout the portion of the building containing the protected occupancy. A building is considered fully sprinklered throughout, even when portions of the building are not protected based on the allowable omissions permitted by NFPA 13.

The format of the standard is not written to identify specific areas that are required to have sprinklers. NFPA 13 requires sprinklers throughout the portion of the building containing the protected occupancy, even though it usually is the entire building that is to be protected. The few exceptions to this rule are associated with specific conditions and are relatively new revisions to the standard.

FAQ [4.1]

Does my building require a sprinkler system?

NFPA 13 is an installation standard and does not specify whether a sprinkler system is required to be installed in a building or structure. NFPA 13 specifies how to properly design and install a sprinkler system using the proper components after the determination has been made that a sprinkler system is required. The administrative authority for requiring sprinklers within buildings rests with any of the following: the local building code; *NFPA 5000®, Building Construction and Safety Code®*; NFPA *101®, Life Safety Code®*; *International Building Code*; or insurance regulations that typically specify the buildings and structures that require sprinkler systems. Where the building code does not require a sprinkler system but one is installed voluntarily, the requirements of this standard still apply to the portion of the building being protected.

EDUFIRE.IR

FAQ [4.1.1]

Is it true that certain areas, such as electrical equipment rooms, closets, bank vaults, or walk-in coolers and freezers, do not require sprinklers?

This is a common misconception. Unless a specific section in NFPA 13 provides explicit permission to omit sprinklers, sprinklers are required in all spaces within a building. As shown by the recent addition of additional spaces that are not required to be protected, there might be cases where omission is reasonable, but those cases have not yet been specifically addressed by the technical committee. It is impossible for the standard to address every possible construction arrangement, and a comparative evaluation should be considered.

FAQ [4.1.2.2]

Why is the local authority having jurisdiction required to be consulted for every limited area system?

For each case, the local authority having jurisdiction must be consulted to ensure that the objectives of the limited area system will be accomplished by the proposed arrangement. Additionally, the local authority having jurisdiction will approve the appropriate design and installation parameters, as well as the applicable portions of NFPA 13, for the particular limited area system. For instance, the modifier for unprotected concealed combustible spaces would not apply. This consultation precedes the normal submittal for approval of the shop drawings as required for all systems. In addition, because the local fire department will provide first responders in the event of a fire, that agency must have a say in the system design and installation requirements.

4.1.2 Limited Area Systems.

Certain codes or local ordinances permit the installation of a partial or limited area sprinkler system. For example, Exhibit 4.1 shows a large boiler room in a building that is not required by code to have a sprinkler system. In NFPA *101®*, *Life Safety Code®*, this space would require special hazard protection, and a limited area sprinkler system would be one option for achieving that protection. These small systems are often supplied by the domestic water supply within the building, and hydraulic calculations are still required.

4.1.2.1 When partial sprinkler systems are installed, the requirements of this standard shall be used insofar as they are applicable.

4.1.2.2 The authority having jurisdiction shall be consulted in each case.

4.2* Owner's Certificate.

The owner(s) of a building or structure where the fire sprinkler system is going to be installed or their authorized agent shall provide the sprinkler system installer with the following information prior to the layout and detailing of the fire sprinkler system *[see Figure A.27.1(b)]*:

(1) Intended use of the building including the materials within the building and the maximum height of any storage
(2) A preliminary plan of the building or structure along with the design concepts necessary to perform the layout and detail for the fire sprinkler system
(3) Water supply information as identified in 5.2.2
(4)* Any special knowledge of the water supply, including known environmental conditions that might be responsible for corrosion, including microbiologically influenced corrosion (MIC)

The owner's certificate is intended to improve communication between the owner or owner's agent and the installing contractor and/or the system designer. An example of an owner's certificate is shown in Figure A.27.1(b). Although closely related to the hydraulic design information sign and the general information sign, the owner's certificate serves a different purpose. The other two signs show the actual design basis used by the contractor, whereas the owner's certificate is a pre-construction form used to transmit relevant data from the owner to the system designer.

The owner's certificate is intended to be the starting point for the design basis of the system as provided by the owner or the owner's representative. The data confirm that the contractor is providing a system designed and installed based on valid information. It also shows that the owner knows the limits on the use of the facility, based on the sprinkler systems design criteria. As a practical matter, the sprinkler

EXHIBIT 4.1 *Boiler Room in an Otherwise Unsprinklered Building.*

EDUFIRE.IR

contractor is usually a subcontractor with limited access to the owner and whose contractual relationship may originate later in the project timeline.

Where a project includes an engineer of record, gathering the data should a be a part of his or her responsibility. Because the certificate is not required for permitting, it is usually not a concern for the engineer of record. While the certificate is required to be submitted for approval with the system shop drawings (see 27.1.1.1), the lack of enforcement by plan reviewers hampers the sharing of information to ensure three-way communication among the building owner, the system designer, and the local fire department.

FAQ [4.2]

When should the owner's certificate be submitted?

A new owner's certificate must be submitted for all new systems and those buildings (existing systems) that have a change of occupancy or change of use. The intent of NFPA 13 is that the determination of the classification of the occupancy or commodity is the responsibility of the design professional, with the acceptance of the local authority having jurisdiction.

ASK THE AHJ

For storage facilities, how does the authority having jurisdiction police the storage arrangement given in the design documentation?

Typically the storage arrangement identified in the submittals can be policed through conditions specified on locally issued permits or through sanctions authorized by the local fire code. Some effective techniques include providing physical barriers within racks so that commodities cannot be stored where flue spaces are supposed to be present, marking building columns and walls with maximum storage heights, and educating the owner or tenants about the need to have the fire sprinkler system evaluated for adequacy when commodity types or storage configurations change.

The owner's certificate should also contain information regarding any evidence that would suggest that water supplies should be specially treated against microbiologically influenced corrosion (MIC) or other internal corrosion. MIC is a fairly rare but severe phenomenon occurring in metallic piping systems that appears related to specific characteristics of a water supply. Water treatment systems are available to help prevent MIC from occurring and can be considered where prior adverse experience of this type has occurred.

ASK THE AHJ

Is it permitted for the installing contractor, who is installing on a design-build basis, to fill out the owner's certificate on the building owner's behalf?

It was intended that the owner's certificate be a declaration by the building owner as to what hazards will be present in the building so that the designer can specify a proper sprinkler system design and not have to worry about the building owner changing the hazards during the construction. Although there is nothing specifically prohibiting such, if the individual or entity designing the system is also filling out the owner's certificate, it defeats the purpose of the certificate. That is not to say there should not be dialogue between the building owner and the designer while the building owner is completing the certificate. Most building owners do not fully understand all the nuances that go into fire sprinkler system design. Making the building owners properly complete the certificate will likely ensure that the owners comprehend what hazards they are certifying.

A.4.2 A building constructed where the expected occupancy hazard and commodity classification of tenant uses are unknown at the time of the design and installation of the sprinkler system presents special problems due to unknown factors of future tenants and uses. The design of sprinkler systems for such buildings should be carefully reviewed with the owners, builders, leasing agents, and local authorities having jurisdiction prior to the selection of design criteria and installation of the system. Consideration should be given to the available height for storage, as well as the occupancy hazards of potential tenants and their likely storage needs.

The intent of Section 4.2 is to provide the owner's certificate for all new systems and where there is a change of occupancy and/or building use. *[See Figure A.27.1(b).]*

A.4.2(4) Recycled or reclaimed water used in a sprinkler system should not have contaminants in the water that are combustible or that will have a detrimental effect on the sprinkler system performance or the life of the sprinkler system.

FAQ [A.4.2]

How should sprinkler systems for spec-type buildings be designed?

Where spec-type buildings are constructed and a sprinkler system is to be installed, it is important that the design of the sprinkler system be reviewed by the owners, builders, leasing agents, and authorities having jurisdiction to ensure that the future use of the building will be properly addressed by the proposed sprinkler system design.

EDUFIRE.IR

4.3* Classification of Hazard.

The occupancy hazard classifications and commodity classifications covered in this chapter form the basis of the design and installation criteria in NFPA 13. The occupancy hazards provide a convenient means of categorizing the fuel loads and fire severity associated with certain building operations. In a similar way, the commodity classifications provide a convenient means of categorizing a relationship between the chemical heat of combustion of various materials and their heat release rate so that the appropriate sprinkler system design can be identified. The likelihood of ignition is not considered in the occupancy or commodity classifications.

The classification of the occupancy or the commodity is the first major decision that is made in the design of the sprinkler system and can have a huge impact on the effectiveness of the system during a fire. This decision is especially critical to assignment of a commodity classification for stored goods. When the storage commodity has been improperly classified, a sprinkler system's capability to control a fire in a warehouse environment can be compromised, allowing for unabated horizontal spread.

FAQ [4.3]

Why is the occupancy and commodity classification the first step in the design process?

Proper classification of the hazard is critical because this is the first step in the design process that will determine the type of sprinkler(s) to use, as well as the spacing and location of the sprinklers and the density/area criteria that will be applied. A design based on an improper classification can negatively affect the system's ability to control or suppress a fire when called upon to do so.

It is important to note that a building or a system can have multiple areas with differing hazard classifications. Such systems might be designed based on a worst-case scenario or designed for each specific area, hazard, or use, provided that adequate separation is provided and the owner/occupant understands the limitations of the use of each area based on the sprinkler system design.

A.4.3 Occupancy examples in the listings as shown in the various hazard classifications are intended to represent the norm for those occupancy types. Unusual or abnormal fuel loadings or combustible characteristics and susceptibility for changes in these characteristics, for a particular occupancy, are considerations that should be weighed in the selection and classification.

The light hazard classification is intended to encompass residential occupancies; however, this is not intended to preclude the use of listed residential sprinklers in residential occupancies or residential portions of other occupancies.

N 4.3.1 General.

4.3.1.1 Occupancy classifications for this standard shall relate to sprinkler design, installation, and water supply requirements only.

4.3.1.2 Occupancy classifications shall not be intended to be a general classification of occupancy hazards.

The term "occupancy hazards" mentioned in 4.3.1.2 should not be interpreted as a generic description or quantification of fire hazards and is not intended to parallel the occupancy hazards identified in other fire safety regulations, such as NFPA *101*; *NFPA 5000®*, *Building Construction and Safety Code®*; or other building codes. A specific operation might present more or less of a hazard, depending on the combustibility, quantity, and arrangement of the building contents. For instance, paperback books in boxes stacked to a height of 6 ft (1.8 m) in the back room of a bookstore present a lower fire hazard than the same books stacked to a height of 12 ft (3.7 m) throughout a warehouse. Accordingly, NFPA 13 categorizes the 6 ft (1.8 m) high stockpile as an ordinary hazard (Group 1) occupancy. The 12 ft (3.7 m) high warehouse storage is considered a Class III commodity and needs to be protected in accordance with the criteria for ordinary hazard (Group 2) occupancies.

Proper classification of a fire hazard is critical to the overall success of the sprinkler system. The determination of the type of occupancy hazard influences system design and installation considerations, such as sprinkler discharge criteria, sprinkler spacing, and water supply requirements. The operations of a given facility can vary significantly and change the overall fire hazard. These potential fluctuations in daily and long-term building operations must be determined and properly addressed in the design of a new sprinkler system or evaluation of the adequacy of an existing sprinkler system.

The occupancy hazard classifications are presented as qualitative descriptions, rather than quantifiable measurements. Ideally, quantification of key factors, such as the fire safety goals of NFPA 13, the likely hazards contained within a specific space, the effect of building geometry and ventilation, and the interaction of sprinkler discharge with the fire would form the basis for NFPA 13. Under a performance-based approach, designers and enforcers would have more flexibility in complying with NFPA 13. Although much of the technology needed for a generic widespread performance-based approach for sprinkler

EDUFIRE.IR

system design is not yet available, testing and research continue to fill the gaps. Performance-based-type approaches have been applied in the development of sprinklers, such as the early suppression fast-response (ESFR) sprinkler and residential sprinklers.

ASK THE AHJ

Who makes the determination of the occupancy classification?

According to 27.1.3(8), the system designer is supposed to classify all areas and rooms as part of the plans submitted to the authority having jurisdiction for review. Whatever local procedures exist for plan review and approval would need to be followed.

FAQ [4.3.1.2]

Are the occupancy hazards contained in NFPA 13 the same as the hazards presented in other NFPA documents?

No, the occupancy hazard classifications are not intended to coincide with or align with the occupancy classifications in other NFPA codes and standards.

N **4.3.1.3** Commodity classification and storage arrangements for miscellaneous and low-piled storage specified in 4.3.1.5 through 4.3.1.8 shall be determined in accordance with Sections 20.3 through 20.5.

DESIGNER'S CORNER [4.3.1.3]

As the sprinkler contractor, I am trying to determine the hazard classification for a building. Can someone at the NFPA or a trade association help me?

Not exactly. Questions regarding hazard classification are difficult to answer because hazard classification is considered to be the most important aspect of fire protection system design and is viewed as an obligation of the responsible design professional. In other words, if you are a sprinkler contractor and you are not the responsible design professional for a project, you are probably not in a position to work with the building owner to understand exactly how the building is going to be used and what limitations the building owner is willing to put on how that use. More to the point of the question, the NFPA or a trade association is not in that position either.

The reason for the involvement of a responsible design professional is to ensure that the site-specific attributes of the project are recognized and properly addressed, which cannot be accomplished in a generic manner. A responsible design professional is charged with the responsibility to work with the building owner and to convey information about the building, including the hazard classification, through the use of the owner's certificate and the design specifications. See Figure A.27.1(b) for an example of an owner's certificate and Section 4.2 for more information.

Both the Society of Fire Protection Engineers and the National Society of Professional Engineers agree that in most cases it is the responsibility of the specifying engineer to define the hazard classification for the fire sprinkler contractor. Unfortunately, since this question continues to come up, additional emphasis on the role of the specifying engineer is necessary.

In a few circumstances, an NFPA occupancy committee has specifically addressed the issue of hazard classification. In this case, NFPA 13 typically picks up those criteria and repeats them in Chapter 26 for the convenience of the user. For example, NFPA 45, *Standard on Fire Protection for Laboratories Using Chemicals*, states that chemistry labs, like those in high school classrooms, should be protected using sprinklers designed to ordinary hazard Group 1. This requirement — extracted from NFPA 45 — appears in Chapter 26 of NFPA 13.

In the absence of specific hazard classification information from a responsible design professional (where applicable), the sprinkler contractor will need to go back to the design professional to confirm a hazard classification designation.

In locations where a design professional is not required or in locations where a licensed sprinkler contractor is permitted to perform the system design, examples of typical occupancies are included for informational purposes in the Annex A material within Section 4.3, but those examples should be used only where it can be confirmed that the building owner is not doing something unusual in the building. For example, a building might be described as an office building, which would be considered as light hazard in Annex A. If the owner intends to include a higher hazard operation in the space, such as a printing and publishing area (Ordinary Hazard Group 2), simply calling it light hazard because it is an office building would not be appropriate.

N **4.3.1.4* Miscellaneous Storage.**

N **A.4.3.1.4** Miscellaneous storage is intended to be storage that is ancillary to the primary function of the building. One example is a manufacturing facility where storage on the manufacturing floor is limited.

EDUFIRE.IR

N **4.3.1.4.1** Miscellaneous storage shall not constitute more than 10 percent of the building area or 4000 ft^2 (370 m^2) of the sprinklered area, whichever is greater.

N **4.3.1.4.2** Miscellaneous storage shall not exceed 1000 ft^2 (93 m^2) in one pile or area.

N **4.3.1.4.3** Miscellaneous storage shall be separated from other storage piles or areas by at least 25 ft (7.6 m).

The miscellaneous storage concept applies to a building in which storage constitutes only a part of the building's use, such as the back room of a mercantile facility. Limitations are imposed on the amount and arrangement of storage that is permitted. The requirements for the protection of miscellaneous storage, as defined in 3.3.123, are contained in Chapter 4.

The concept of miscellaneous storage was developed to address those situations where only a relatively small portion of a building is used for storage and where such storage does not exceed 12 ft (3.7 m) in height. One example is a manufacturing operation that uses a portion of its facility to store small amounts of finished product and raw materials. As with most facilities, the fire hazard associated with the storage is likely to differ from that of the manufacturing operation. Prior editions of NFPA 13 addressed storage only if it was considered miscellaneous.

The 10 percent limit in 3.3.123 is taken from certain accessory use definitions, as found in the model building codes. The 4000 ft^2 (370 m^2) limit is derived by taking 10 percent of the maximum allowable area of coverage for a sprinkler system riser protecting high-piled storage. See Section 4.5 for system protection area limitations.

4.3.1.5 Low-Piled Storage.

4.3.1.5.1 For storage of Class I through Class IV commodities 12 ft (3.7 m) or less in height that do not meet the definition of *Miscellaneous Storage* that is on solid shelf racks, in-rack sprinklers shall be provided in accordance with 25.6.1, and ceiling sprinkler protection shall be provided in accordance with this chapter for the applicable occupancy hazard criteria.

4.3.1.5.2 For storage of Group A plastic commodities 5 ft (1.5 m) or less in height that do not meet the definition of *Miscellaneous Storage* that is on solid shelf racks, in-rack sprinklers shall be provided in accordance with 25.6.1, and ceiling sprinkler protection shall be provided in accordance with this chapter for the applicable occupancy hazard criteria.

The requirements in 4.3.1.5.1, 4.3.1.5.2, and 25.6.1 address situations where the installation of in-rack sprinklers would be required for solid shelf racks that are protected in accordance with Chapter 4. For nonmiscellaneous rack storage of Class I through Class IV commodities up to 12 ft (3.7 m) in height and Group A plastics up to 5 ft (1.5 ft) in height that are allowed to be protected under the provisions of Chapter 4 as required by 4.3.1.5.1 and 4.3.1.5.2, respectively, the installation of in-rack sprinklers beneath solid shelves are required in accordance with Section 25.6. The ceiling sprinkler design for these storage areas is permitted to be determined from 25.2.2.

Conversely, the installation of in-rack sprinklers is not required beneath solid shelving installed within racking arrays that do not exceed the limits of miscellaneous storage. In other words, smaller storage arrays complying with the definition of *miscellaneous storage* are permitted to use solid shelving without the installation of in-rack sprinklers.

N **4.3.1.6 Miscellaneous Tire Storage.**

N **4.3.1.6.1** Miscellaneous tire storage shall not exceed 2000 ft^2 (185 m^2).

N **4.3.1.6.2** Miscellaneous tire storage piles on-tread, regardless of storage method, shall not exceed 25 ft (7.6 m) in the direction of the wheel holes.

N **4.3.1.7 Protection Criteria for Miscellaneous and Low-Piled Storage.**

N **4.3.1.7.1** The protection criteria for miscellaneous and low-piled storage protected by ceiling sprinklers only shall be selected from Table 4.3.1.7.1 and Figure 19.3.3.1.1 in accordance with the density/area method of 19.3.3.2.

EDUFIRE.IR

TABLE 4.3.1.7.1 *Discharge Criteria for Miscellaneous Storage Up to 12 ft (3.7 m) in Height*

Commodity		Type of Storage	Storage Height		Maximum Ceiling Height		Design Curve Figure 19.3.3.1.1	Note	Inside Hose		Total Combined Inside and Outside Hose		Duration (minutes)
			ft	m	ft	m			gpm	L/min	gpm	L/min	
Class I to Class IV													
Class I		Solid-piled, palletized, bin box, shelf, single-, double-, multiple-row rack, and back-to-back shelf storage	≤12	≤3.7	—	—	OH1		0, 50, 100	0, 190, 380	250	950	90
Class II			≤10	≤3.0	—	—	OH1		0, 50, 100	0, 190, 380	250	950	90
Class II			>10 to ≤12	>3.0 to ≤3.7	—	—	OH2		0, 50, 100	0, 190, 380	250	950	90
Class III			≤12	≤3.7	—	—	OH2		0, 50, 100	0, 190, 380	250	950	90
Class IV			≤10	≤3.0	—	—	OH2		0, 50, 100	0, 190, 380	250	950	90
Class IV		Palletized, bin box, shelf, and solid-piled	>10 to ≤12	>3.0 to ≤3.7	32	10	OH2		0, 50, 100	0, 190, 380	250	950	90
		Single-, double-, multiple-row rack and back-to-back shelf storage	>10 to ≤12	>3.0 to ≤3.7	32	10	EH1		0, 50, 100	0, 190, 380	500	1900	120
		Single-, double-, multiple-row rack	>10 to ≤12	>3.0 to ≤3.7	32	10	See Chapter 25.	+1 level of in-rack	0, 50, 100	0, 190, 380	250	950	90
Group A Plastic Storage													
Cartoned	Nonexpanded and expanded	Solid-piled, palletized, bin box, shelf, single-, double-, multiple-row rack, and back-to-back shelf storage	≤5	≤1.5	—	—	OH2		0, 50, 100	0, 190, 380	250	950	90
			>5 to ≤10	>1.5 to ≤3.0	15	4.6	EH1		0, 50, 100	0, 190, 380	500	1900	120
			>5 to ≤10	>1.5 to ≤3.0	20	6.1	EH2		0, 50, 100	0, 190, 380	500	1900	120
			>10 to ≤12	>3.0 to ≤3.7	17	5.2	EH2		0, 50, 100	0, 190, 380	500	1900	120
		Solid-piled, palletized, bin box, shelf, and back-to-back shelf storage	>10 to ≤12	>3.0 to ≤3.7	32	10	EH2		0, 50, 100	0, 190, 380	500	1900	120
		Single-, double-, multiple-row rack	>10 to ≤12	>3.0 to ≤3.7	32	10	See Chapter 25.	+ 1 level of in-rack	0, 50, 100	0, 190, 380	250	950	90
Exposed	Nonexpanded and expanded	Solid-piled, palletized, bin box, shelf, single-, double-, multiple-row rack, and back-to-back shelf storage	≤5	≤1.5	—	—	OH2		0, 50, 100	0, 190, 380	250	950	90
		Solid-piled, palletized, bin box, shelf, and back-to-back shelf storage	>5 to ≤8	>1.5 to ≤2.4	28	8.5	EH2		0, 50, 100	0, 190, 380	500	1900	120
		Solid-piled, palletized, bin box, shelf, single-, double-, multiple-row rack, and back-to-back shelf storage	>5 to ≤10	>1.5 to ≤3.0	15	4.6	EH2		0, 50, 100	0, 190, 380	500	1900	120

(*Continues*)

EDUFIRE.IR

TABLE 4.3.1.7.1 (*Continued*)

Commodity		Type of Storage	Storage Height ft	Storage Height m	Maximum Ceiling Height ft	Maximum Ceiling Height m	Design Curve Figure 19.3.3.1.1	Note	Inside Hose gpm	Inside Hose L/min	Total Combined Inside and Outside Hose gpm	Total Combined Inside and Outside Hose L/min	Duration (minutes)
	Nonexpanded	Solid-piled, palletized, bin box, shelf, single-, double-, multiple-row rack, and back-to-back shelf storage	>5 to ≤10	>1.5 to ≤3.0	20	6.1	EH2		0, 50, 100	0, 190, 380	500	1900	1120
	Expanded	Single-, double-, multiple-row rack	>5 to ≤10	>1.5 to ≤3.0	20	6.1	See Chapter 25.	+1 level of in-rack	0, 50, 100	0, 190, 380	250	950	90
	Nonexpanded and expanded	Solid-piled, palletized, bin box, shelf, and back-to-back shelf storage	>10 to ≤12	>3.0 to ≤3.7	17	5.2	EH2		0, 50, 100	0, 190, 380	500	1900	120
		Single-, double-, multiple-row rack	>10 to ≤12	>3.0 to ≤3.7	17	5.2	EH2		0, 50, 100	0, 190, 380	500	1900	120
			>10 to ≤12	>3.0 to ≤3.7	32	10	See Chapter 25.	+1 level of in-rack	0, 50, 100	0, 190, 380	250	950	90
Tire Storage													
Tires		On floor, on side	>5 to ≤12	>1.5 to ≤3.7	32	10	EH1		0, 50, 100	0, 190, 380	500	1900	120
		On floor, on tread, or on side	≤5	≤1.5	—	—	OH2		0, 50, 100	0, 190, 380	250	950	90
		Single-, double-, or multiple-row racks on tread or on side	≤5	≤1.5	—	—	OH2		0, 50, 100	0, 190, 380	250	950	90
		Single-row rack, portable, on tread or on side	>5 to ≤12	>1.5 to ≤3.7	32	10	EH1		0, 50, 100	0, 190, 380	500	1900	120
		Single-row rack, fixed, on tread or on side	>5 to ≤12	>1.5 to ≤3.7	32	10	EH1		0, 50, 100	0, 190, 380	500	950	120
			>5 to ≤12	>1.5 to ≤3.7	32	10	See Chapter 25.	+1 level of in-rack	0, 50, 100	0, 190, 380	250	950	90
Rolled Paper Storage													
Heavyweight and medium weight		On end	≤10	≤3.0	30	9.1	OH2		0, 50, 100	0, 190, 380	250	950	90
Tissue and lightweight		On end	≤10	≤3.0	30	9.1	EH1		0, 50, 100	0, 190, 380	250	950	120

EDUFIRE.IR

N **4.3.1.7.1.1** The protection criteria for rack storage of miscellaneous and low-piled storage with in-rack sprinklers shall be in accordance with 25.2.2.

N **4.3.1.7.2** Except as provided in 4.3.1.6.1, the maximum design area for miscellaneous and low-piled storage shall not exceed 3000 ft^2 (279 m^2).

4.3.1.8 In-Rack Sprinklers. Miscellaneous and low-piled storage per 4.3.1.5 through 4.3.1.7 that require in-rack sprinklers shall follow Chapter 25 for their installation and design requirements.

The use of in-rack sprinklers is rare with low-piled and miscellaneous storage. Table 4.3.1.7.1 lists the arrangements that require in-rack sprinklers. If in-rack sprinklers are required, the user of this standard will need to proceed to Chapter 25 for design requirements. Chapter 25 outlines the hydraulic requirements for both the ceiling protection and the in-rack sprinklers. Table 25.12.2.1 provides the number of in-rack sprinklers in the design for miscellaneous storage scenarios. In addition, 25.12.1.4 requires that the in-rack and ceiling sprinkler system be balanced at the point of connection.

4.3.2* Light Hazard. The following shall be protected with light hazard occupancy criteria in this standard:

(1) Spaces with low quantity and combustibility of contents

A.4.3.2 Light hazard occupancies include occupancies having uses and conditions similar to the following:

(1) Animal shelters
(2) Churches
(3) Clubs
(4) Eaves and overhangs, if of combustible construction with no combustibles beneath
(5) Educational
(6) Hospitals, including animal hospitals and veterinary facilities
(7) Institutional
(8) Kennels
(9) Libraries, except large stack rooms
(10) Museums
(11) Nursing or convalescent homes
(12) Offices, including data processing
(13) Residential
(14) Restaurant seating areas
(15) Theaters and auditoriums, excluding stages and prosceniums
(16) Unused attics

Note that it is not the committee's intent to automatically equate library bookshelves with ordinary hazard occupancies or with library stacks. Typical library bookshelves of approximately 8 ft (2.4 m) in height, containing books stored vertically on end, held in place in close association with each other, with aisles wider than 30 in. (750 mm) can be considered to be light hazard occupancies. Similarly, library stack areas, which are more akin to shelf storage or record storage, as defined in NFPA 232, should be considered to be ordinary hazard occupancies.

Other examples of light hazard occupancies include a typical hotel sleeping room and a typical classroom. These occupancies represent the least severe fire hazard, since the fuel loads associated with them are low, and relatively small rates of heat release are expected. Generally, no processing, manufacturing, or storage operations are included, and fixtures and furniture remain in fairly permanent arrangements. Sprinkler systems designed to protect light hazard occupancies, therefore, have less demanding water supply requirements. Additionally, more design flexibility is possible.

FAQ [4.3.2]

Who makes the final determination on the acceptability of the occupancy classification?

The final determination on the acceptability of the occupancy classification is the responsibility of the authority having jurisdiction.

EDUFIRE.IR

ASK THE AHJ

Why did the authority having jurisdiction reject a proposal to design the sprinkler system for a new high school using an occupancy classification of light hazard?

Many new high schools being built have facilities that go beyond a classroom (light hazard occupancy) classification due to areas used for cafeteria kitchens, mechanical spaces, vocational learning, and chemical lab classrooms. The occupancy classification in the annex is intended for guidance and is not absolute. Educational facilities referred to by A.4.3.2 as light hazard are the classroom areas.

Exhibit 4.2 shows a library shelving area, which is described in A.4.3.2 and is considered a light hazard occupancy. Note the stack height, aisle width, and book arrangement. Exhibit 4.3 is an example of a library stack area that most likely would require protection as an ordinary hazard (Group 1) occupancy due to the stack heights and configuration.

EXHIBIT 4.2 Example of a Light Hazard Library Shelving Area.

EXHIBIT 4.3 Large Library Stack Area and Possible Ordinary Hazard (Group 1) Occupancy. (©iStockphoto.com/Freezingtime)

4.3.3* Ordinary Hazard (Group 1). The following shall be protected with OH1 occupancy criteria in this standard:

(1) Spaces with moderate quantity and low combustibility of contents
(2) Stockpiles of contents with low combustibility that do not exceed 8 ft (2.4 m)

Within the ordinary hazard classification, Group 1 occupancies present the least severe fire threat. Group 1 occupancies are most light manufacturing and service industries where the use of flammable and combustible liquids or gases is either nonexistent or very limited. Stockpiles of combustible commodities typically found within an ordinary hazard (Group 1) occupancy cannot exceed a height of 8 ft (2.4 m). Additionally, where the quantity and arrangement of the stockpiles do not exceed the limitations of miscellaneous storage, as defined in Chapter 3, the requirements of Chapter 4 apply. If the miscellaneous storage limitations are exceeded, then the provisions of Chapter 20 apply.

A.4.3.3 Ordinary hazard (Group 1) occupancies include occupancies having uses and conditions similar to the following:

(1) Automobile parking and showrooms
(2) Bakeries
(3) Beverage manufacturing
(4) Canneries

EDUFIRE.IR

(5) Dairy products manufacturing and processing
(6) Electronic plants
(7) Glass and glass products manufacturing
(8) Laundries
(9) Restaurant service areas
(10) Porte cocheres
(11) Mechanical rooms

Regarding automobile parking and showrooms, even though there is gasoline in the automobiles, the loss history for these occupancies demonstrates that the fires in standard-type parking garages are typically limited to one car and do not pose an excessive challenge for the sprinkler system to control. However, this does not apply to parking garages that use a car stacking system. As indicated in A.4.3.6, parking garages using a car stacking or car lift system with maximum 2 automobiles high are classified as Extra Hazard Group 2 occupancies. If the number of automobiles stored vertically exceeds two, then such an occupancy classification is outside the scope of NFPA 13. Additional consideration should be given where a larger number of electric cars are stored or where car chargers are present.

4.3.4* Ordinary Hazard (Group 2). The following shall be protected with OH2 occupancy criteria in this standard:

(1) Spaces with moderate to high quantity and combustibility of contents
(2) Stockpiles of contents with moderate to high combustibility that do not exceed 12 ft (3.7 m)

The ordinary hazard (Group 2) classification addresses those ordinary hazard occupancies that do not meet the criteria of the ordinary hazard (Group 1) classification. Group 2 occupancies present a more severe fire hazard and demand more from the sprinkler system to achieve fire control than do Group 1 and light hazard occupancies. Ordinary hazard (Group 2) occupancies include those types of manufacturing and processing operations in which the amount and combustibility of contents is greater than those for Group 1. The Group 2 classification also addresses the miscellaneous storage (as defined in Chapter 3) of contents stored up to and including 12 ft (3.7 m) in height, as required by this chapter. Where the miscellaneous storage limitations are exceeded, the provisions of Chapter 20 apply.

A.4.3.4 Ordinary hazard (Group 2) occupancies include occupancies having uses and conditions similar to the following:

(1) Agricultural facilities
(2) Barns and stables
(3) Cereal mills
(4) Chemical plants — ordinary
(5) Confectionery products
(6) Distilleries
(7) Dry cleaners
(8) Exterior loading docks (Note that exterior loading docks only used for loading and unloading of ordinary combustibles should be classified as OH2. For the handling of flammable and combustible liquids, hazardous materials, or where utilized for storage, exterior loading docks and all interior loading docks should be protected based upon the actual occupancy and the materials handled on the dock, as if the materials were actually stored in that configuration.)
(9) Feed mills
(10) Horse stables
(11) Leather goods manufacturing
(12) Libraries — large stack room areas
(13) Machine shops
(14) Metal working

FAQ [A.4.3.4]

How should exterior loading docks be classified?

Where exterior loading docks are present, determining a proper occupancy or commodity classification for the required sprinkler protection of the loading dock can be difficult. The exterior loading dock shown in Exhibit 4.4 is used for general loading and unloading of vehicles, and the loading dock's overall classification should be ordinary hazard (Group 2). However, the interior loading dock shown in Exhibit 4.5 and any exterior loading docks that are also used for storage of materials are required to be classified based on the actual occupancy or commodities stored on the dock.

EDUFIRE.IR

EXHIBIT 4.4 Example of Ordinary Hazard (Group 2) Exterior Loading Dock.

EXHIBIT 4.5 Interior Loading Dock.

(15) Mercantile
(16) Paper and pulp mills
(17) Paper process plants
(18) Piers and wharves
(19) Plastics fabrication, including blow molding, extruding, and machining; excluding operations using combustible hydraulic fluids
(20) Post offices
(21) Printing and publishing
(22) Racetrack stable/kennel areas, including those stable/kennel areas, barns, and associated buildings at state, county, and local fairgrounds
(23) Repair garages
(24) Resin application area
(25) Stages
(26) Textile manufacturing
(27) Tire manufacturing
(28) Tobacco products manufacturing
(29) Wood machining
(30) Wood product assembly

4.3.5* Extra Hazard (Group 1) (EH1). The following shall be protected with EH1 occupancy criteria in this standard:

(1) Spaces with very high quantity and combustibility of contents
(2) Spaces where dust, lint, or other materials are present, introducing the probability of rapidly developing fires

Extra hazard occupancies represent the most severe fire conditions addressed under the occupancy hazard classifications in NFPA 13 and present the most severe challenge to sprinkler protection. The extra hazard occupancy examples are classified on the basis of actual field experience with sprinkler system operations in occupancies having conditions similar to those identified.

Extra hazard (Group 1) occupancies include those with hydraulic machinery or systems with flammable or combustible hydraulic fluids under pressure. Ruptures and leaks in piping or fittings have resulted in fine spray discharge of such liquids, causing intense fires. Those occupancies with process machinery that use flammable or combustible fluids in closed systems are extra hazard (Group 1) occupancies. Also in this group are occupancies that have dust and lint in suspension or that contain moderate amounts of

EDUFIRE.IR

combustible cellular foam materials. Buildings used for textile manufacturing are examples of an extra hazard (Group 1) occupancy.

A.4.3.5 Extra hazard (Group 1) occupancies include occupancies having uses and conditions similar to the following:

(1) Aircraft hangars (except as governed by NFPA 409)
(2) Combustible hydraulic fluid use areas
(3) Die casting
(4) Metal extruding
(5) Plywood and particleboard manufacturing
(6) Printing [using inks having flash points below 100°F (38°C)]
(7) Rubber reclaiming, compounding, drying, milling, vulcanizing
(8) Saw mills
(9) Textile picking, opening, blending, garnetting, or carding, combining of cotton, synthetics, wool shoddy, or burlap
(10) Upholstering with plastic foams

4.3.6* Extra Hazard (Group 2) (EH2). The following shall be protected with EH2 occupancy criteria in this standard:

(1) Spaces with very high quantity and combustibility of contents
(2) Spaces with substantial amounts of combustible or flammable liquids
(3) Spaces where shielding of combustibles is extensive

Extra hazard (Group 2) occupancies contain more than small amounts of flammable or combustible liquids, usually in open systems where rapid evaporation can occur when these liquids are subjected to high temperatures.

The extra hazard (Group 2) occupancy classification also applies where ceiling sprinklers are severely obstructed by nonstructural elements, such as process piping and machinery, and where water discharged by sprinklers might not reach the burning material because of the shielding.

A.4.3.6 Extra hazard (Group 2) occupancies include occupancies having uses and conditions similar to the following:

(1) Asphalt saturating
(2) Flammable liquids spraying
(3) Flow coating
(4) Manufactured home or modular building assemblies (where finished enclosure is present and has combustible interiors)
(5) Open oil quenching
(6) Plastics manufacturing
(7) Solvent cleaning
(8) Varnish and paint dipping
(9) Car stackers and car lift systems with 2 cars stacked vertically

N **4.3.7 High-Piled Storage.** Storage arrangements that do not meet the requirements of 4.3.1.5 through 4.3.1.8 shall be protected in accordance with Chapters 20 through 25.

4.3.8* Special Occupancy Hazards. (Reserved)

A.4.3.8 Other NFPA standards contain design criteria for fire control or fire suppression *(see 4.3.8 and Chapter 2)*. While these can form the basis of design criteria, this standard describes the methods of design, installation, fabrication, calculation, and evaluation of water supplies that should be used for the specific design of the system.

EDUFIRE.IR

Other NFPA standards contain sprinkler system design criteria for fire control or suppression of specific hazards. This information has been either referenced or copied into Chapter 26 using NFPA's extract policy.

Many buildings contain several different types of occupancies. A simple example of this is a restaurant where, for purposes of sprinkler protection, food preparation areas are treated as ordinary hazard (Group 1), while the public seating areas are handled as light hazard. On a larger scale, a grocery store includes a public shopping area, which is usually treated as an ordinary hazard (Group 2) occupancy. In many cases, back room areas not within the mercantile operation will likely contain some quantity of bulk storage. Although it is reasonable to expect that a higher degree of fire protection would be needed in the back room, older editions of NFPA 13 did not provide such guidance.

The storage of bulk items in a back room is similar to a warehouse operation, although on a smaller scale, and requires special consideration. Depending on the size of the back room area and the type, quantity, and arrangement of items stored, the space needs to be protected in accordance with the provisions for miscellaneous storage in Chapter 4 or protected in accordance with the storage requirements of Chapter 20. The concept of miscellaneous storage is included to allow for correlation between occupancy and commodity classifications.

N **4.3.9** Where K-11.2 (160) or larger sprinklers are used with EH1 or EH2 design curves, the design area shall be permitted to be reduced by 25 percent but not below 2000 ft^2 (185 m^2), regardless of temperature rating.

4.4 Hose Connections.

Hose connections shall not be required for the protection of miscellaneous storage.

4.5 System Protection Area Limitations.

FAQ [4.5.1]

How was the 52,000 ft^2 (4830 m^2) limit established?

NFPA 13 formerly limited system size by the number of sprinklers on a system using the pipe schedule method — for example, 400 sprinklers for ordinary hazard areas. The 52,000 ft^2 (4830 m^2) limitation is determined by multiplying the 400 sprinklers by the 130 ft^2 (12 m^2) maximum spacing. These area limitations are not related to the hydraulics or the operating characteristics of the system. Rather, the area limitations are based on judgment factors concerning the maximum area within a single, vertical fire division that should be protected by a single system or that could be out of service at any given time.

4.5.1 The maximum floor area on any one floor to be protected by sprinklers supplied by any one sprinkler system riser or combined system riser shall be as follows:

(1) Light hazard — 52,000 ft^2 (4830 m^2)
(2) Ordinary hazard — 52,000 ft^2 (4830 m^2)
(3)* Extra hazard — Hydraulically calculated — 40,000 ft^2 (3720 m^2)
(4) High-piled Storage — High-piled storage (as defined in 3.3.95) and storage covered by other NFPA standards — 40,000 ft^2 (3720 m^2)
(5) In-rack Storage — 40,000 ft^2 (3720 m^2)

It is the intent of this subsection to require new systems designed for extra hazard occupancies to be hydraulically calculated. The maximum coverage area specified in 4.5.1 is the maximum floor area per system on any one floor in a given building. The maximum areas of coverage can be extended to other detached buildings, as permitted by 4.5.4.1.

Where multiple risers are necessary to meet the system area limitations, a manifold riser arrangement can be considered, as shown in Exhibit 4.6. For a building containing only light hazard or ordinary hazard occupancies, each of the three risers in Exhibit 4.6 could protect up to 52,000 ft^2 (4830 m^2) in a single-story, 156,000 ft^2 (14,490 m^2) building. If the building contained only extra hazard occupancies that were hydraulically designed or high-piled storage, each riser could protect up to 40,000 ft^2 (3720 m^2) in a single-story, 120,000 ft^2 (11,150 m^2) building. The total number of manifolded risers on a single header should be limited so that, in the event of an impairment to the supply piping, the total area impaired is limited.

EDUFIRE.IR

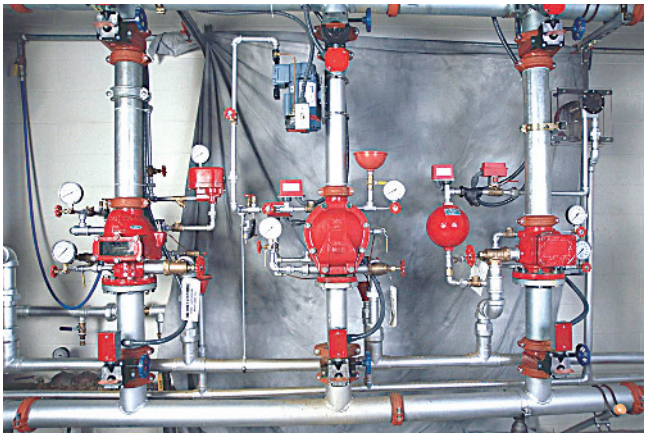

EXHIBIT 4.6 Manifold Riser Arrangement Consisting of Two Wet Pipe Systems and One Dry Pipe System.

A.4.5.1(3) Pipe schedule — 25,000 ft² (2320 m²).

New systems for extra hazard occupancies are required to be hydraulically calculated; however, the previous limit for pipe schedule systems still might be applicable for existing systems being maintained, which is why this language was moved to the annex.

N **4.5.2** The floor area occupied by mezzanines shall comply with 4.5.2.1, 4.5.2.2, or 4.5.2.3.

The 2019 edition has clarified when mezzanine area needs to be tabulated as part of the floor area limitations specified in 4.5.1 and when it does not. Prior to these clarifications, it could have been interpreted that a system riser protecting a 52,000 ft² (4380 m²) area could also protect a mezzanine of unlimited size.

N **4.5.2.1** In a building with only one sprinkler system, the floor area occupied by mezzanines shall not be included in the area limits of 4.5.1.

N **4.5.2.2** In a building with more than one sprinkler system, if a mezzanine is located entirely within the same sprinkler system boundary as the sprinklers protecting the ceiling above, the floor area occupied by mezzanine(s) shall not be included in the area limits of 4.5.1.

FAQ [4.5.2.1]

When determining the area limitations for a single floor, is the additional area occupied by mezzanines required to be added to the floor area?

Paragraph 4.5.2.1 does not require the additional area occupied by the mezzanine to be counted against the area limitation. Exhibit 4.7 shows an example of the intent of this requirement. For high-piled storage, the area protected by one system riser cannot exceed 40,000 ft² (3720 m²). When the area is being determined, the mezzanine area does not need to be added to the actual floor area.

EXHIBIT 4.7 Mezzanine Storage Area in Warehouse. (Courtesy of EZR Shelving)

EDUFIRE.IR

N **4.5.2.3** In a building with more than one sprinkler system, if any portion of the mezzanine floor area that is located outside the system boundary of the riser supplying the sprinklers under the mezzanine, the area of the mezzanine of the system boundary shall be added to the system area from which it is supplied, and the total system area shall meet the limits of 4.5.1.

For the 2019 edition of NFPA 13, new system protection area limitation requirements have been added where mezzanines are present. Prior to the 2019 edition, there was nothing to prevent an overhead sprinkler system from being installed to the area limitations of 4.5.1 and then supplying the underside of a mezzanine whose area far exceeded the overhead system's boundary. For example, there was nothing to prevent a sprinkler system in a 1,000,000 ft^2 (92,903 m^2) building supplying a 52,000 ft^2 (4830 m^2) area at the roof from also supplying a 300,000 ft^2 (27,870 m^2) mezzanine. Now, with the new requirements. any mezzanine area that is outside of the overhead system boundary must be added to the system protection area limitations and not exceed the limitations of 4.5.1. See Exhibit 4.8 for clarification of the requirements of 4.5.2.

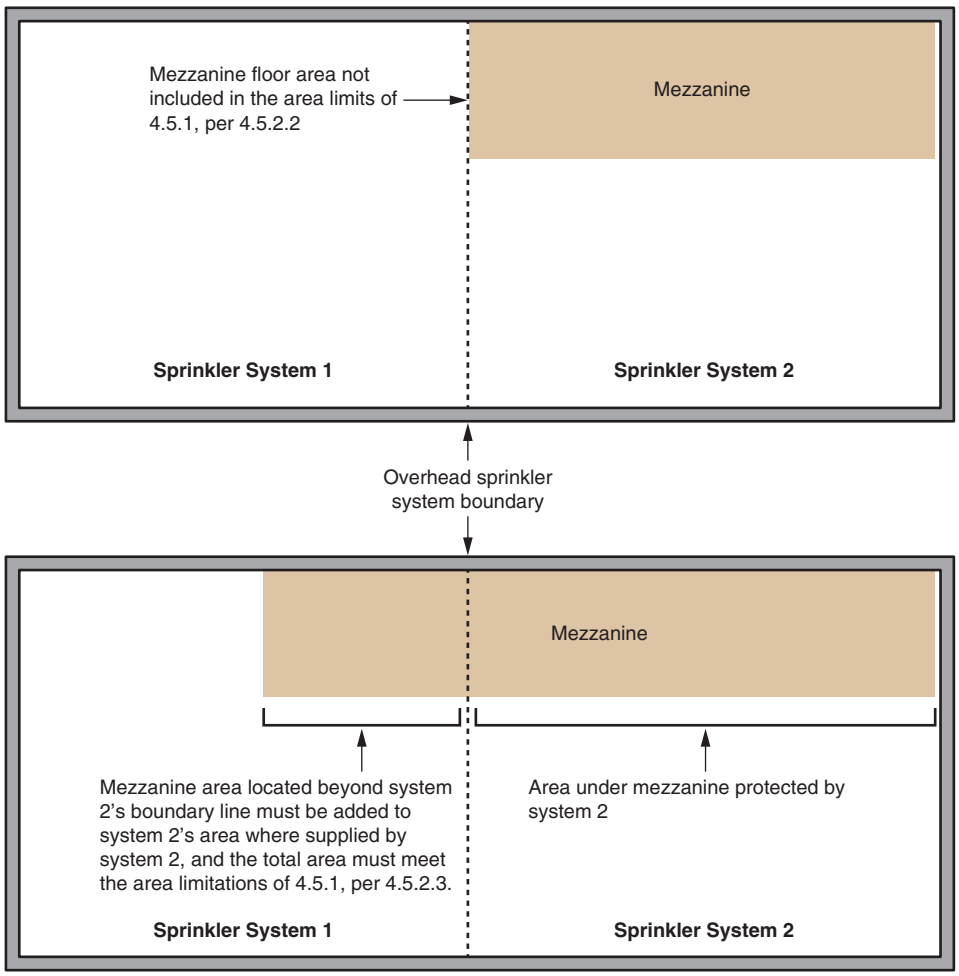

EXHIBIT 4.8 *System Protection Area Limitations with a Mezzanine*

EDUFIRE.IR

4.5.3 Where single systems protect extra hazard, high-piled storage, or storage covered by other NFPA standards, and ordinary or light hazard areas, the extra hazard or storage area coverage shall not exceed the floor area specified for that hazard and the total area coverage shall not exceed 52,000 ft² (4830 m²).

N **4.5.4** The area protected by a single in-rack system includes all of the floor area occupied by the racks, including aisles, regardless of the number of levels of in-rack sprinklers.

N **4.5.4.1** Multiple buildings attached by canopies, covered breezeways, common roofs, or a common wall(s) shall be permitted to be supplied by a single fire sprinkler riser.

4.5.5 The maximum system size shall comply with 4.5.1.

Where acceptable to the local authority having jurisdiction, multiple detached buildings can be protected with a single sprinkler system. In instances where no water supply is located close by, it would be feasible to supply the sprinklers in a detached building by extending the sprinkler system from an adjacent building. In such cases, the best alternative is to extend the water supply and provide the building with its own sprinkler system. Examples might include portable classrooms, small auxiliary buildings associated with car dealerships, and similar small adjacent buildings. In such cases, the local authority having jurisdiction can allow the sprinklers to be supplied by a sprinkler system in an adjacent building. Care should be taken when the two buildings involved do not have the same ownership or the fire protection is not under the control of a single party. Such situations can result in impairments that go unknown or delays in accessing control valves in an emergency situation. Another consideration should be the ability of alarm devices to identify which areas or buildings are experiencing waterflow. This can be accomplished with visible alarm annunciation devices such as strobes rather than multiple local alarm bells.

4.5.6* Detached Buildings.

A.4.5.6 Buildings adjacent to a primary structure can be protected by extending the fire sprinkler system from the primary structure. This eliminates the need to provide a separate fire sprinkler system for small auxiliary buildings. Items that should be considered before finalizing fire sprinkler design should include the following:

(1) Actual physical distance between adjacent structures
(2) Potential for the property to be split into separate parcels and sold separately
(3) Square footage of both the primary and auxiliary structures
(4) Difficulties in providing a separate water supply to the auxiliary structure
(5) Occupancy/hazard of the auxiliary structure
(6) Ability of emergency response personnel to easily identify the structure from which waterflow is originating

4.5.6.1 Unless the requirements of 4.5.6.2 apply, detached buildings, regardless of separation distance, that do not meet the criteria of 4.5.4 shall be provided with separate fire sprinkler systems.

4.5.6.2 When acceptable to the authority having jurisdiction, detached structures shall be permitted to be supplied by the fire sprinkler system of an adjacent building.

ASK THE AHJ

Why would an authority having jurisdiction have concerns about multiple buildings using the same fire sprinkler system?

From the standpoint of an authority having jurisdiction, the primary problem with multiple buildings using the same sprinkler system occurs if each building is or becomes owned by different owners. If the source building owner stops maintaining the water supply and the buildings are under separate ownership, it becomes very difficult to enforce fire code maintenance requirements for the dependent building. If the authority having jurisdiction allows the use of the exception in 4.5.6.2, it should be in situations where it is unlikely or impossible for the ownership of the individual buildings to split or where legal easements are recorded.

FAQ [4.5.3]

Where high-piled storage or extra hazard occupancies are mixed with light hazard or ordinary hazard occupancies, is it acceptable to exceed 40,000 ft² (3720 m²) per floor?

A single system that protects both ordinary or light hazard areas and solid-piled, palletized, or rack storage greater than 12 ft (3.7 m) high or that protects extra hazard areas can have a coverage area of up to 52,000 ft² (4830 m²), as indicated by 4.5.3. However, not more than 40,000 ft² (3720 m²) of that coverage area can be high-piled storage or hydraulically designed for extra hazard occupancies.

The 40,000 ft² (3720 m²) maximum extra hazard coverage area for hydraulically designed systems is consistent with the requirements for storage areas that have similar fire loading. If the potential exists to use the ordinary or light hazard areas for storage in the future, use of the lower system area of 40,000 ft² (3720 m²) as the allowable system protection area would be appropriate.

EDUFIRE.IR

4.6 Water Supply Information.

4.6.1 Water Supply Capacity Information. The following information shall be included:

(1) Location and elevation of static and residual test gauge with relation to the riser reference point
(2) Flow location
(3) Static pressure, psi (bar)
(4) Residual pressure, psi (bar)
(5) Flow, gpm (L/min)
(6) Date
(7) Time
(8) Name of person who conducted the test or supplied the information
(9) Other sources of water supply, with pressure or elevation

In addition to the information listed in 4.6.1, the effective point of the water test should be identified. Hydraulic calculations should include the friction loss in the piping from the effective point to the building riser, as well as adjustments for elevation differences.

4.6.1.1* Where a waterflow test is used for the purposes of system design, the test shall be conducted no more than 12 months prior to working plan submittal unless otherwise approved by the authority having jurisdiction.

Conducting a waterflow test to establish water supply capacity, flow, and pressure can be problematic. Cold temperatures, environmental laws that prohibit discharge of water into sewers or storm drains, and potential damage to property in the flowing water's path are some of the concerns that have led many jurisdictions to restrict or even prohibit the practice of flow testing.

Because many factors can affect a water supply, both environmentally and physically, from year to year, NFPA 13 was modified to require that waterflow tests used for sprinkler system design purposes be conducted within 12 months of the submittal of working plans to the approval agency.

ASK THE AHJ

Under what circumstances would the authority having jurisdiction permit older water supply test results to be used?

Older water supply test results might be permitted if the authority having jurisdiction has general knowledge that the water supply in the area of the project is strong and that there has been no significant demand added to the system from other projects. Older test results also might be permitted in situations where the water authority will not allow proper waterflow testing because of the time of year or droughts.

FAQ [A.4.6.1.1]

What other methods are available to determine the available flow and pressure from a water supply?

A growing number of water utilities no longer perform waterflow tests to determine available flows and pressures. Instead, an analysis is performed using knowledge of the flows and pressures in the system, taking into account the future expected growth and demand of the community. From this analysis, design flow and pressure can be computed for any location on the distribution network.

A.4.6.1.1 Alternative means of determining available water supplies should be considered where drought or other concerns are present.

To obtain accurate waterflow data, a study of the water supply system should be conducted and evaluated by a licensed fire protection engineer. The first step to understanding the performance of the system and the potential magnitude of flow and pressure fluctuations is to determine the system details, such as the type of water system, the impact of gravity, and the amount of direct pumping expected. Determining when peak demands occur can be difficult, but water departments usually will have information readily available concerning the time of year and time of day during which the highest distribution system demand occurs. Once this information has been obtained, judgment can be made regarding appropriate safety factors that should be applied to the raw waterflow data.

EDUFIRE.IR

Many authorities having jurisdiction and insurance underwriters require a 10 percent reduction in static and residual pressures as a safety factor. A more appropriate method is to determine the required safety factor based on the characteristics of the specific water supply system with consideration given to its age, the time of year and time of day the flow test is performed, and, where development is taking place, future expansion of the building or the area.

4.6.2 Water Supply Treatment Information. The following information shall be included when water supply treatment is provided in accordance with 5.1.5:

(1) Type of condition that requires treatment
(2) Type of treatment needed to address the problem
(3) Details of treatment plan

As part of the overall water supply information, it is important to document any required water supply treatments, including the condition requiring treatment, the type of treatment, and the details of the treatment plan. Microbiologically influenced corrosion (MIC) is a relatively rare but growing problem. Microbes in the water attach themselves to pipes and create an environment corrosive to the pipe, causing pinhole leaks. Microbe by-products can also build up and restrict the effective diameter of the pipe. Neither situation is beneficial for a sprinkler system.

Subsection 5.1.5 requires that corrosion, including MIC, be dealt with once it is known to be a problem and specifies some acceptable techniques. If MIC has built up within a system or eaten through the pipes, the affected pipes must be cleaned or replaced, and the water entering the system must be treated with a biocide to destroy the microbes.

Proper treatment depends on the type of microbes causing the corrosion or buildup. Different microbes respond differently to each kind of biocide. Each site where MIC is known to be a problem needs its own plan for dealing with the particular microbes in question. The National Fire Sprinkler Association (NFSA) report "Detection, Treatment, and Prevention of Microbiologically Influenced Corrosion in Water-Based Fire Protection Systems" provides information on the subject.

SEE ALSO

NFPA 25, Chapter 14 (Internal Piping Conditions and Obstruction Investigation), for more information on identification and treatment of systems with MIC.

4.7* Additives.

Additives or chemicals intended to stop leaks, such as sodium silicate or derivatives of sodium silicate, brine, or similar acting chemicals, shall not be used in sprinkler systems.

A.4.7 Bacterial inhibitors and other chemicals that are approved and used for the prevention and mitigation of MIC and that do not adversely affect the fire-fighting properties of the water or the performance of the fire sprinkler system components are not prohibited.

While the standard strictly prohibits the use of additives to provide leak stoppage, the standard does not prohibit chemicals or additives to address the prevention or mitigation of MIC, provided those additives do not adversely affect the fire-fighting properties of water or the performance of the system components.

4.8 Air, Nitrogen, or Other Approved Gas.

Where air is used to charge, maintain, or supervise sprinkler systems, nitrogen or other approved gas shall also be permitted to be used.

Prior to the 2013 edition of NFPA 13, the standard specifically addressed the fact that nitrogen is a viable alternative to air; however, it was not addressed globally in the standard. Section 4.8 is intended to provide direction to the user that nitrogen and other approved gases are acceptable alternatives to air for charging, maintaining, and supervising a system.

EDUFIRE.IR

DESIGNER'S CORNER [4.8]

Is nitrogen better than air for dry pipe and preaction systems?

Both gases are acceptable and have their places in dry pipe and preaction systems. However, before answering the question further, we should examine the recipe for rust, which includes oxygen, water, iron, and an environment where the three can combine to form iron oxide (rust). Iron is a significant component in steel, so the three ingredients of rust exist in all sprinkler systems using steel pipe, but dry pipe or preaction systems are most vulnerable when air is compressed, pushing additional oxygen into a moist environment. Wet pipe systems are less of a concern because the oxygen submerged in the water forms a thin layer of oxide on the pipe, but as long as the water is not replaced, there is no more oxygen to continue the process of oxidation (rusting).

Not all dry pipe and preaction systems contain an environment that is conducive to the development of iron oxide. Many dry pipe and preaction systems using steel pipe have lasted for 50 or 60 years and have not experienced significant corrosion, even though they used air as the charging gas. Such systems are pitched well to drains and are emptied frequently so that a moist environment does not exist in the piping. It is also possible to equip the compressor with an air dryer so that the humidity is removed from the air before it goes into the system.

The use of nitrogen can significantly reduce the probability of corrosion in the piping system. Without oxygen, building owners do not have to be as concerned with the combination of water and steel in the sprinkler piping. But the use of nitrogen is more expensive than air, so building owners have to weigh their concern for corrosion against what they are willing to pay for the sprinkler system.

There are two ways that nitrogen can be placed into a sprinkler system:

1. Use of nitrogen bottles, which can be used to fill the system initially. Keeping nitrogen bottles connected to the system will probably be necessary because the gas tends to find its way out of the system, which could cause the system to trip due to low gas pressure.
2. Use of a generator that removes the nitrogen from the surrounding air and pushes it into the system, replacing the oxygen. In these systems, the gas in the system starts out as air, and over time the nitrogen takes over. The generators are connected to the system to help replace lost pressure over time.

Until a noncombustible antifreeze solution can be found, there are going to be more dry pipe and preaction systems used in spaces that are subject to freezing conditions. It is highly likely that the number of systems using nitrogen will rise as the general demand for dry pipe and preaction systems rises.

4.9* Support of Nonsprinkler System Components.

Sprinkler system components shall not be used to support nonsprinkler system components unless expressly permitted by this standard.

A.4.9 Non-system components can adversely affect the operation and longevity of the fire sprinkler system. Objects connected to the sprinkler system can displace sprinkler system piping, causing obstruction to the spray pattern of sprinklers, delay the activation of a sprinkler, or cause chemical compatibility problems that can cause the failure of sprinkler system components.

4.10 Noncombustible Materials and Limited-Combustible Materials.

4.10.1* Noncombustible Material.

A.4.10.1 The provisions of 4.10.1 do not require inherently noncombustible materials to be tested in order to be classified as noncombustible materials. [**5000**:A.7.1.4.1]

EDUFIRE.IR

4.10.1.1 A material that complies with any of the following shall be considered a noncombustible material:

(1)* The material, in the form in which it is used, and under the conditions anticipated, will not ignite, burn, support combustion, or release flammable vapors when subjected to fire or heat.

A.4.10.1.1(1) Examples of such materials include steel, concrete, masonry and glass. [**5000**:A.7.1.4.1.1(1)]

(2) The material is reported as passing ASTM E136, *Standard Test Method for Behavior of Materials in a Vertical Tube Furnace at 750°C.*
(3) The material is reported as complying with the pass/fail criteria of ASTM E136 when tested in accordance with the test method and procedure in ASTM E2652, *Standard Test Method for Behavior of Materials in a Tube Furnace with a Cone-shaped Airflow Stabilizer*, at 750°C.
[**5000**:7.1.4.1.1]

The use of noncombustible or limited-combustible materials is necessary to meet many of the requirements that allow for the omission of sprinklers in certain areas — for example, 9.2.1. Construction materials that fall under this category include certain types of acoustical ceiling tiles and insulation materials.

Intumescent coatings can be applied to construction materials such as plywood or trusses to create a noncombustible or limited combustible surface. While these products might not meet the testing requirements of other NFPA or ASTM standards, the local authority having jurisdiction should be consulted for approval of such applications for their acceptability as noncombustible or limited combustible materials, based on Section 1.5.

4.10.1.2 Where the term *limited-combustible* is used in this standard, it shall also include the term *noncombustible*. [**5000**:7.1.4.1.2]

4.10.2* Limited-Combustible Material. A material shall be considered a limited-combustible material where both of the following conditions of 4.10.2(1) and 4.10.2(2), and the conditions of either 4.10.2.1 or 4.10.2.2, are met:

(1) The material does not comply with the requirements for a noncombustible material in accordance with 4.10.1.
(2) The material, in the form in which it is used, exhibits a potential heat value not exceeding 3500 Btu/lb (8141 kJ/kg), when tested in accordance with NFPA 259.
[**5000**:7.1.4.2]

A.4.10.2 Material subject to increase in combustibility or flame spread index beyond the limits herein established through the effects of age, moisture, or other atmospheric condition is considered combustible. *(See NFPA 259 and NFPA 220.)* [**5000**:A.7.1.4.2]

The term *limited-combustible material* is used in portions of Chapter 9, specifically Section 9.2, that describe those areas in which sprinklers are not required. The presence of noncombustible or limited-combustible wall materials is necessary to meet many of the exceptions that allow for the omission of sprinklers in certain areas.

4.10.2.1 The material shall have a structural base of noncombustible material with a surfacing not exceeding a thickness of 1/8 in. (3.2 mm) where the surfacing exhibits a flame spread index not greater than 50 when tested in accordance with ASTM E84, *Standard Test Method for Surface Burning Characteristics of Building Materials,* or UL 723, *Standard for Test for Surface Burning Characteristics of Building Materials*. [**5000**:7.1.4.2.1]

4.10.2.2 The material shall be composed of materials that in the form and thickness used, neither exhibit a flame spread index greater than 25 nor evidence of continued progressive combustion when tested in accordance with ASTM E84 or UL 723 and are of such composition that all surfaces that would be exposed by cutting through the material on any plane would neither

EDUFIRE.IR

exhibit a flame spread index greater than 25 nor exhibit evidence of continued progressive combustion when tested in accordance with ASTM E84 or UL 723. [**5000**:7.1.4.2.2]

4.10.2.3 Materials shall be considered limited-combustible materials where tested in accordance with ASTM E2965, *Standard Test Method for Determination of Low Levels of Heat Release Rate for Materials and Products Using an Oxygen Consumption Calorimeter,* at an incident flux of 75 kW/m^2 for a 20-minute exposure, and both the following conditions are met:

(1) The peak heat release rate shall not exceed 150 kW/m^2 for longer than 10 seconds.
(2) The total heat released shall not exceed 8 MJ/m^2.
[**5000**:7.1.4.2.3]

4.10.2.4 Where the term *limited-combustible* is used in this standard, it shall also include the term *noncombustible*. [**5000**:7.1.4.2.4]

References Cited in Commentary

National Fire Protection Association, 1 Batterymarch Park, Quincy, MA 02169-7471.
NFPA 25, *Standard for the Inspection, Testing, and Maintenance of Water-Based Fire Protection Systems*, 2017 edition.
NFPA 45, *Standard on Fire Protection for Laboratories Using Chemicals*, 2015 edition.
NFPA *101®*, *Life Safety Code®*, 2018 edition.
NFPA 5000®, *Building Construction and Safety Code®*, 2018 edition.

National Fire Sprinkler Association, 514 Progress Dr., Suite A, Linthicum Heights, MD 21090.
"Detection, Treatment, and Prevention of Microbiologically Influenced Corrosion in Water-Based Fire Protection Systems," June 1998.

EDUFIRE.IR

CHAPTER

5

Water Supplies

REORGANIZATION NOTE

Chapter 5 in the 2019 edition was Chapter 24 in the 2016 edition of NFPA 13. The Correlating Committee decided to move this chapter to the beginning of the document, given that determining the water supply is usually the first step in designing a sprinkler system.

Chapter 5 contains the minimum requirements for the various water supply sources that provide water to sprinkler systems. The effectiveness of any sprinkler system design depends on the adequacy of its water supply in terms of its ability to provide the required demand for flow and pressure when needed. A failure of the system to control or suppress a fire can result in significant damage or loss of property and possible loss of life. Unless the sprinkler system discharge criteria can be satisfied by the water supply in terms of pressure, flow, and duration, the system will not perform as intended. Sprinkler system design considerations, such as sprinkler spacing, hazard classification, design density, and pipe sizes, will have little or no influence without sufficient water.

In the United States and Canada, municipal water systems often are robust, with distribution piping sized large enough to provide adequate water supplies to satisfy the demand for many water-based fire protection systems, without the need for fire pumps and/or water storage tanks. In some cases — usually where systems are being designed for facilities outside the United States and Canada — listed fire pumps and water storage tanks typically are required.

In many cases, efforts are made to design a sprinkler system so that an existing water supply can adequately supply the system's demand — that is, larger pipes or sprinklers with larger K-factors are selected so that the system demand will not exceed the water supply capacity. If the water supply, which includes pressure, flow, and capacity (duration times flow) components, is deficient, supplemental measures to increase the water supply will be needed for proper system operation. In some situations, a fire pump could be needed to compensate for a lack of pressure even if a sufficient volume of water is available. In other cases, such as a large industrial complex, the installation of a gravity tank could be needed to provide the necessary water supply capacity.

To determine the appropriate water supply source, consideration should be given to the ability of the local fire department to perform final extinguishment. Most sprinkler system designs in NFPA 13 are intended to control a fire event until the local fire department completes the final extinguishment. However, some facilities may be more difficult for the local fire department to achieve final extinguishment due to a facility's location, the intricate layout of a building's interior, or complex manufacturing processes. These potential difficulties and their impact on final extinguishment could result in a decision by the design engineer or authority having jurisdiction to increase the duration of the water supply for the sprinkler system.

The proper maintenance of the water supplies for sprinkler systems is critical and is addressed in NFPA 25, *Standard for the Inspection, Testing, and Maintenance of Water-Based Fire Protection Systems*. It is also important to evaluate the impact of retroactive installation of pressure-reducing valves or backflow devices on the design of an existing sprinkler system. These devices have the potential to reduce the pressure to a point where a water supply that was previously sufficient is no longer capable of adequately supplying the sprinkler system.

EDUFIRE.IR

5.1 General.

5.1.1 Number of Supplies. Every automatic sprinkler system shall have at least one automatic water supply.

It is not necessary for a single water supply source to be sized to account for the simultaneous operation of all systems. The water supply must be capable of meeting the most hydraulically demanding area of the systems. If a building's size requires that it have three separate sprinkler systems, each system is not required to be connected to its own water supply. Instead, the water supply must be capable of meeting the demands of the hydraulically most demanding areas of the three systems. NFPA 13 assumes that only one fire will occur in a building at any given time and that the sprinkler system will control the fire before it spreads to adjacent portions of the building.

FAQ [5.1.1]

Where a building requires multiple sprinkler systems, how many water supplies are required?

The intent of 5.1.1 is that a water supply be provided that will be sufficient to supply the activation of any single sprinkler system. Therefore, only one water supply is required for a single building.

5.1.2 Capacity. Water supplies shall be capable of providing the required flow and pressure for the remote design area determined using the requirements and procedures as specified in Chapters 19 through 26 including hose stream allowance where applicable for the required duration.

As with all components critical to the effective operation of the sprinkler system, water supply sources must be reliable. The sources must be capable of meeting the system demand at all times. Regardless of how well the sprinkler system was designed and installed, if the water supply fails, the sprinkler system will fail. If the water supply is taken from a municipal waterworks system, potential future degradation of water supply conditions, as well as seasonal and daily fluctuations, must be considered. Additionally, waterflow tests should be conducted on a routine basis to monitor the condition of the water supply. Over time, water supply systems are likely to be degraded by pipe corrosion, scale buildup, and inadvertently closed or partially closed valves. The impact of future users of the water supply also must be evaluated. In addition, if water supplies employ fire pumps or water storage tanks, this equipment is subject to certain requirements to maintain its reliability. NFPA 25 further requires that specific inspection, testing, and maintenance activities be conducted to ensure the integrity of the water supply.

Where a waterworks system serves as the sprinkler system's water supply, 19.2.5 requires that the supply be of sufficient capacity to meet the sprinkler system's discharge criteria, any inside hose demand where such equipment is provided, and a waterflow allowance for outside hose. Paragraph 19.2.6.2 requires the outside hose allowance to be added either at the connection to the water main or at a yard hydrant, whichever is closer.

Regardless of its arrangement, the underground supply must have sufficient capacity to satisfy the calculated system demand, based on the selected design approach from Chapter 19 or Chapter 24, the protection requirements from Chapters 20 through 23 and Chapter 25, and the occupancy requirements from Chapter 26. NFPA 13 requires fire pumps and water storage tanks to be sized based on the systems they serve, but in all cases, the supply must require no human intervention to operate and must be capable of supplying the system for the necessary duration.

FAQ [5.1.1]

What does the term *automatic water supply* mean?

The term *automatic water supply* means that the activation of the water supply does not depend on human intervention.

SEE ALSO

NFPA 20, *Standard for the Installation of Stationary Pumps for Fire Protection*, and NFPA 22, *Standard for Water Tanks for Private Fire Protection*, for additional information.

ASK THE AHJ

Can the authority having jurisdiction require a safety margin between the system demand and the water supply curve?

Per NFPA 13, if the water supply curve is accurate and accounts for all conditions that could affect the flows and pressures available to the fire sprinkler system, the answer is no. This does not mean that the local jurisdiction cannot legally adopt an amendment requiring a safety margin, because there are several jurisdictions that have done just that.

EDUFIRE.IR

ASK THE AHJ *(Continued)*

As explained in the commentary to Section 1.1, NFPA 13 specifies a set of minimum standards. If the owner wants to avoid potentially costly water supply upgrades in the future because of natural deterioration, the system designer should inform the owner of such implications if the system demand is near or on the water supply curve. There might be more cost-effective ways to design the system with a safety margin when the system is originally installed, rather than the owner having to do retrofits later in the life of the building. It is also worth noting that the minimum system demand calculations of the standard build in safety factors. These safety factors include, but are not necessarily limited to, design areas that are much larger than the typical area of sprinklers activated in most fire scenarios, the assumption that discharge densities near the fire will match those in the design calculations rather than the much higher densities that are typically produced by the first few activated sprinklers, and the typical use of the total pressure approach to friction loss calculations.

However, once the system demand is determined using NFPA 13, that system demand is fixed for the life of the system, and that is the flow/pressure with which an authority having jurisdiction will enforce the system maintenance requirements. In other words, if the system demand is designed to be exactly on the water supply curve today, and there is any future deterioration of the water supply, the owner will be responsible for implementing changes so the system demand is properly supplied — whether it entails providing a new supply or improving the existing water supply. There is no tolerance to the water supply deterioration in NFPA 25 when comparing the water supply curve to the system demand — there is only a tolerance to the present water supply curve as it compares to the water supply curve results of prior tests. Too often the authority having jurisdiction sees the owner incurring huge costs because the installing contractor decided to save on upfront costs and the owners were not properly informed of the ramifications of doing so.

DESIGNER'S CORNER [5.1.2]

After a flow test has been performed to determine the strength of the water supply, does a safety factor or safety margin need to be applied to account for daily and seasonal fluctuations?

While NFPA 13 and NFPA 24, *Standard for the Installation of Private Fire Service Mains and Their Appurtenances,* do not require a specific safety factor or safety margin, one should be applied. The amount of safety margin to apply is complex and difficult to codify into a standard adopted by law. This is one of the reasons that evaluation of the water supply is an engineering function. Some of the variables involved include the following:

- Time of day and season in which the flow test was conducted
- Typical usage in the water supply
- Maturity of the water supply (potential for the community to grow significantly)
- Number of sprinklers in the design area
- Other assumptions in the sprinkler system design

After a flow test has been conducted, the water utility company can be contacted to see how the pressure in the area goes up and down over days and seasons. NFPA 25 considers a sprinkler system on a broken main as impaired and gives the building owner options to provide temporary water supplies, add fire watches, or evacuate the building. With a better understanding of NFPA rules, water utility companies might be willing to collaborate with NFPA to develop appropriate adjustments to water supply flow tests.

Another issue with the potential adjustment to the water supply flow test is that the responsibility lies with the specifying engineer. According to the Society of Fire Protection Engineers (SFPE) and their position on the practice of fire protection engineering, it is the specifying engineer's job to evaluate the water supply and apply appropriate safety factors. But many times the engineers push the task back on the sprinkler contractor, who does not have the information necessary to make adjustments.

Many local authorities having jurisdiction require a 10 psi (0.7 bar) safety margin or a 10 percent safety factor between the sprinkler system demand and the water supply. This is, in effect, a reduction of the water supply from the flow test data. While this is enforceable, it might not be sufficient in some cases and it might be too much in others. Until NFPA 13 can address this issue across the board, some sort of adjustment should be factored into the information from a water supply flow test.

EDUFIRE.IR

5.1.3* Size of Fire Mains.

A.5.1.3 For typical combined domestic/fire sprinkler demands, systems with 4 in. (100 mm) pipe or larger typically do not need to include the domestic demand in the calculations because it is such a small fraction of the total flow that it does not make a significant difference in the results. But for situations where 4 in. (100 mm) pipe is used for the combined domestic/fire sprinkler systems and the domestic demand is considerable, then the domestic demand should be included in the calculations. Generally, pipe that is 6 in. or larger can carry combined domestic/fire protection demand without any consideration for domestic demand being necessary.

5.1.3.1 Except as provided in 5.1.3.2 or 5.1.3.3, no pipe smaller than 6 in. (150 mm) in diameter shall be installed as a private service main.

5.1.3.2 For mains that do not supply hydrants, sizes smaller than 6 in. (150 mm) shall be permitted to be used subject to the following restrictions:

(1) The main supplies only automatic sprinkler systems, open sprinkler systems, water spray fixed systems, foam systems, or Class II standpipe systems.
(2) Hydraulic calculations show that the main will supply the total demand at the appropriate pressure. Systems that are not hydraulically calculated shall have a main at least as large as the system riser.

Private fire service mains must be at least 6 in. (150 mm) in diameter where they supply hydrants. In some cases, the use of a minimum 8 in. (200 mm) pipe for dead-end mains is advised. Where the fire service mains do not supply hydrants, they are permitted to be sized based on hydraulic calculations, or they are permitted to be as large as the riser under certain conditions. Fire mains need a water supply sufficient to meet the demands of the sprinkler systems, inside hose, outside hose, and other anticipated water demands.

5.1.3.3 Where a single main less than 4 in. (100 mm) in diameter serves both fire systems and other uses, the non-fire demand shall be added to the hydraulic calculations for the fire system at the point of connection unless provisions have been made to automatically isolate the non-fire demand during a fire event.

Simultaneous flow of the non-fire water and automatic sprinkler systems must be considered when small diameter [i.e., less than 4 in. (100 mm)] combination lead-ins are used. The additional non-fire waterflow can create increased friction loss, resulting in a reduction in the water available for the sprinkler system.

The term *domestic* was replaced with *non-fire* in the 2013 edition. This change was made to emphasize that any water that is flowing needs to be accounted for whether it is being used for domestic use or other uses.

5.1.4 Underground Supply Pipe. For pipe schedule systems, the underground supply pipe shall be at least as large as the system riser.

The requirements of 5.1.4 apply regardless of the type of water supply used.

5.1.5* Water Supply Treatment.

A.5.1.5 Evaluation of the water supply and environmental conditions does not necessarily require a water sample analysis by a laboratory. Instead, general knowledge of the long-term condition of sprinkler systems with similar piping materials in similar environments on the same water supply can be a sufficient evaluation.

There are several options to address the effects of MIC on sprinkler systems. Some types of sprinkler pipe such as CPVC have not shown to be affected by MIC. Other types of pipe are being manufactured with a biofilm that resists the effects of MIC.

Where water supplies are treated with bacterial inhibitors, evaluation of the effects of the bacterial inhibitor on sprinkler system components (pipe, fittings, sprinklers, gaskets, valves, and seals) is just as important as evaluating the effect the bacterial inhibitor has on

EDUFIRE.IR

the organisms. Where water treatment is selected as the method to deal with MIC, all water entering the system during testing or flushing needs to be treated so that the organisms do not get a chance to establish themselves.

Since all of the conditions that can affect the growth of MIC are unknown, a plan to sample randomly selected interior positions in the system can be effective. The frequency and location of the interior inspections will depend on the extent of the known MIC problem with the same water supply and similar environmental conditions.

5.1.5.1 Water supplies and environmental conditions shall be evaluated for the existence of microbes and conditions that contribute to microbiologically influenced corrosion (MIC). Where conditions are found that contribute to MIC, the owner(s) shall notify the sprinkler system installer and a plan shall be developed to treat the system using one of the following methods:

(1) Install a water pipe that will not be affected by the MIC microbes
(2) Treat all water that enters the system using an approved bacterial inhibitor
(3) Implement an approved plan for monitoring the interior conditions of the pipe at established time intervals and locations
(4) Install corrosion monitoring station and monitor at established intervals

Microbiologically influenced corrosion (MIC) is caused, in part, by microorganisms in the water supply that react with system piping. MIC can result in the formation of deposits and pitting of system piping in a relatively short period of time.

Over the past several years, additional data on the effects of MIC have become available. MIC can cause severe problems with metallic pipe in areas with specific water supply and system factors. The provisions of 5.1.5.1 are intended to guard against the effects of MIC on sprinkler system performance when the sprinkler system is installed. MIC can cause ongoing damage to system piping, so follow-up evaluation and treatment of the water supply likely will be necessary once the system is in service.

5.1.5.2 Water supplies and environmental conditions shall be evaluated for conditions that contribute to unusual corrosive properties. Where conditions are found that contribute to unusual corrosive properties, the owner(s) shall notify the sprinkler system installer and a plan shall be developed to treat the system using one of the following methods:

(1) Install a water pipe that is corrosion resistant.
(2) Treat water that enters the system using a listed corrosion inhibitor.
(3) Implement an approved plan for monitoring the interior conditions of the pipe at established intervals and locations.
(4) Install corrosion monitoring station and monitor at established intervals.
(5) Fill dry-pipe or preaction systems with nitrogen as a supervisory gas to mitigate against corrosion.
(6) When using a generator, use an approved nitrogen generator.

5.1.5.3 Where listed bacterial inhibitors and/or corrosion inhibitors are used, they shall be compatible with system components. Where used together, they shall also be compatible with each other.

5.1.6 Arrangement.

5.1.6.1 Connection Between Underground and Aboveground Piping.

5.1.6.1.1 The connection between the system piping and underground piping shall be made with a suitable transition piece and shall be properly strapped or fastened by approved devices.

5.1.6.1.2 Where required due to specific mechanical or environmental conditions, the transition piece shall be protected against possible damage from corrosive agents, solvent attack, or mechanical damage.

FAQ [5.1.6.1.1]

Is it acceptable to use plastic pipe for the transition to the sprinkler system piping?

Many types of pipe acceptable for use as underground fire service mains are limited to conditions involving belowgrade applications only. As a result, steel, iron, or copper pipe materials are typically used for the transition piece; however, any piping approved for underground installation is acceptable as long as it is protected against possible damage from corrosive agents, solvent attack, or mechanical damage.

EDUFIRE.IR

5.1.6.2* Connection Passing Through or Under Foundation Walls. When system piping pierces a foundation wall below grade or is located under the foundation wall, clearance shall be provided to prevent breakage of the piping due to building settlement.

A.5.1.6.2 Where the system riser is close to an outside wall, underground fittings of proper length should be used in order to avoid pipe joints located in or under the wall. Where the connection passes through the foundation wall below grade, a 1 in. to 3 in. (25 mm to 75 mm) clearance should be provided around the pipe and the clear space filled with asphalt mastic or similar flexible waterproofing material.

Without clearance around the wall, normal building movement and settlement can cause the failure of pipe that is rigidly held in place by foundation walls.

5.1.7* Meters. Where meters are required by other authorities, they shall be listed.

A.5.1.7 Where water meters are in the supply lines to a sprinkler system, they should be rated to deliver the proper system demand. The amount of water supplied through a water meter varies with its size and type and might not provide the required demand, regardless of the water supply available.

Recent efforts to conserve water and the enhanced enforcement of water usage and sometimes fees have resulted in many water authorities requiring the metering of sprinkler systems. While the meters can be a useful tool for the water purveyor, they also cause additional pressure loss and reduce the reliability of sprinkler systems. Their added expense and ongoing maintenance requirements are additional reasons the use of meters should be carefully considered where not mandated.

5.1.8* Connection from Waterworks System.

A.5.1.8 Where connections are made from public waterworks systems, such systems should be guarded against possible contamination as follows *(see AWWA M14, Recommended Practice for Backflow Prevention and Cross Connection Control)*:

(1) For private fire service mains with direct connections from public waterworks mains only or with booster pumps installed in the connections from the street mains, no tanks or reservoirs, no physical connection from other water supplies, no antifreeze or other additives of any kind, and with all drains discharging to atmosphere, dry well, or other safe outlets, no backflow protection is recommended at the service connection.

(2) For private fire service mains with direct connection from the public water supply main plus one or more of the following: elevated storage tanks or fire pumps taking suction from aboveground covered reservoirs or tanks (all storage facilities are filled or connected to public water only and the water in the tanks is to be maintained in a potable condition), an approved double check valve assembly is recommended.

(3) For private fire service mains directly supplied from public mains with an auxiliary water supply such as a pond or river on or available to the premises and dedicated to fire department use; or for systems supplied from public mains and interconnected with auxiliary supplies, such as pumps taking suction from reservoirs exposed to contamination or rivers and ponds; driven wells, mills, or other industrial water systems; or for systems or portions of systems where antifreeze or other solutions are used, an approved reduced pressure zone-type backflow preventer is recommended.

Where connections are made from public waterworks systems, it might be necessary to guard against possible contamination of the public supply.

5.1.8.1 The requirements of the public health authority having jurisdiction shall be determined and followed.

FAQ [5.1.8.1]

When backflow prevention devices are installed, what pressure losses must be accounted for?

Where installed, the pressure loss through a backflow prevention device must be accounted for, and the valves on the device must be supervised like any other system control valve. If a backflow prevention device is installed retroactively, the pressure loss through the additional pipe and fittings used in conjunction with the prevention device also must be taken into account. For further details, see 16.14.5. In addition, the backflow prevention device must be properly inspected, tested (including forward flow at system demand), and maintained to ensure proper operation.

EDUFIRE.IR

5.1.8.2 Where equipment is installed to guard against possible contamination of the public water system, such equipment and devices shall be listed for fire protection service.

FAQ [5.1.8.2]

Are backflow prevention devices required by NFPA 13?

The most common type of equipment used to guard against possible contamination of the public water supply is a listed backflow prevention device. These devices typically affect the system's hydraulic characteristics and are a potential point of system impairment if performance is not properly monitored.

Backflow prevention devices are not a requirement of NFPA 13 and serve no benefit to the sprinkler system. Backflow prevention devices are typically required by public health authorities for non–fire protection purposes.

5.2 Types.

Although not specifically mentioned, suction tanks (see Exhibit 5.1), embankment supported tanks, wells, and ponds could also be considered as water supply sources for automatic sprinkler systems. Along with the other water supply sources identified, the sources must be reliable and have enough capacity to meet the sprinkler system demand at all times.

When water supplies other than circulating public waterworks systems are used, the proper installation of system components, such as piping, pumps, or tanks, should be verified. Even though private systems are designed to provide adequate water capacity, flow, and pressure, the reliability of these systems must be monitored through the implementation of a periodic inspection, testing, and maintenance program and through the proper supervision of certain system components. Public systems are tested and supervised continually by the daily demands placed on them. Private systems can remain idle for longer periods of time.

5.2.1* Water supplies for sprinkler systems shall be one of the following or any combination:

(1) A connection to an approved public or private waterworks system in accordance with 5.2.2
(2) A connection including a fire pump in accordance with 5.2.3
(3) A connection to a water storage tank at grade or below grade installed in accordance with NFPA 22 and filled from an approved source
(4) A connection to a pressure tank in accordance with 5.2.4 and filled from an approved source
(5) A connection to a gravity tank in accordance with 5.2.5 and filled from an approved source
(6) A penstock, flume, river, lake, pond, or reservoir in accordance with 5.2.6
(7)* A source of recycled or reclaimed water where the building owner (or their agent) has analyzed the source of the water and the treatment process (if any) that the water undergoes before being made available to the sprinkler system and determined that any materials, chemicals, or contaminants in the water will not be detrimental to the components of the sprinkler system it comes in contact with

EXHIBIT 5.1 Suction Tank. (Courtesy of Starfire, Inc.)

EDUFIRE.IR

Connection to a public or private waterworks system, such as the one shown in Exhibit 5.2, is often the preferred choice among water supply options. Such systems typically are reliable, accessible, and capable of accommodating the demand for a wide range of sprinkler systems.

If a waterworks system is contemplated for the supply source, the associated water supply test data must have been obtained no more than 12 months prior to submittal of the working plan. Peak loads on the system, as well as any seasonal fluctuations and likely interruptions of waterflow, must be contemplated. When a waterworks system is being considered, the least amount of water in terms of pressure and flow available should be used as the water supply, because the sprinkler system demand must be met 24 hours a day, 7 days a week, 365 days a year.

A.5.2.1 Acceptable water supplies for fire sprinkler systems must provide sufficient flow and pressure for the required duration. Many water supply sources contain sufficient flow and volume but do not possess sufficient pressure. Some acceptable water supplies, such as storage tanks located at or below grade, rivers, lakes, and reservoirs, will almost always require combination with a pump to provide the needed pressure. Fire pumps are used with other supplies such as waterworks or gravity tanks to provide additional pressure needed to meet the system demand.

A.5.2.1(7) In an effort to help comply with efforts for sustainable and renewable building construction, some engineers and architects have suggested the use of reclaimed or recycled water to use in fire sprinkler systems rather than the potable water typically used from the

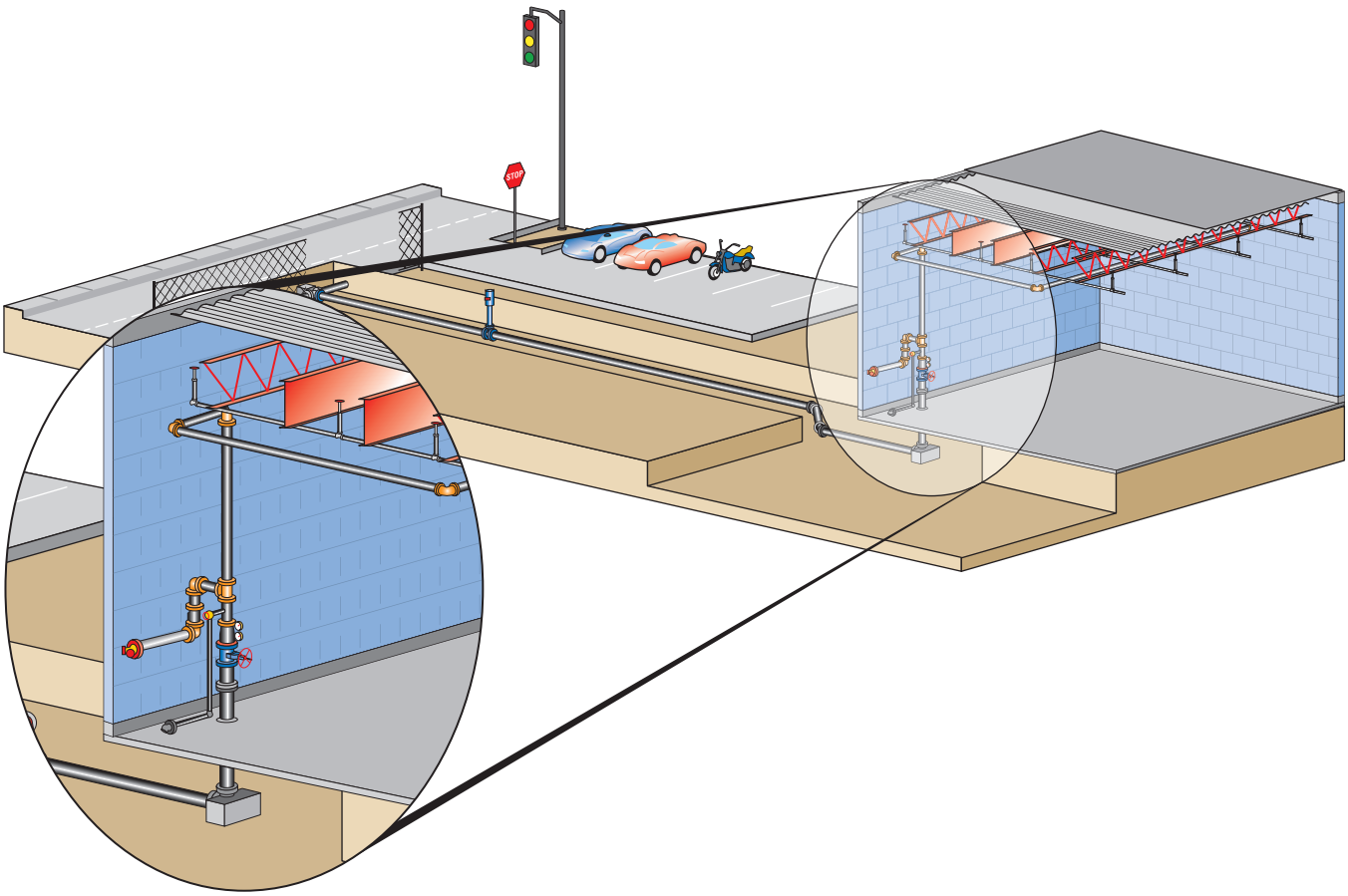

EXHIBIT 5.2 Private Waterworks Supply with No Fire Pump. (Courtesy of Stephan Laforest)

EDUFIRE.IR

public water supply. While this effort has some merit, there is a concern about the quality of the water from these recycled and reclaimed systems. The capture of rainwater is generally not considered a problem since NFPA 13 has long allowed the use of open lakes, rivers, and ponds, which are nothing more than open collections of rainwater and melted snow. But other systems that are recycling water that has been used in some industrial or other process might have contaminants that are combustible, or they might be detrimental to the sprinkler system by preventing it from working properly or accelerating corrosion. Recycled or reclaimed water should never be used in a sprinkler system until an analysis of what contaminants might be in the water has determined that nothing will be detrimental to sprinkler system performance or the expected reasonable life of the sprinkler system. When such an analysis is completed successfully, the information should be transmitted to the sprinkler contractor through the use of the Owner's Certificate required by Section 4.2.

5.2.2* Connections to Waterworks Systems.

A.5.2.2 Care should be taken in making water tests to be used in designing or evaluating the capability of sprinkler systems. The water supply tested should be representative of the supply that might be available at the time of a fire. For example, testing of public water supplies should be done at times of normal demand on the system. Public water supplies are likely to fluctuate widely from season to season and even within a 24-hour period. Allowance should be made for seasonal or daily fluctuations, for drought conditions, for possibility of interruption by flood, or for ice conditions in winter. Testing of water supplies also normally used for industrial use should be done while water is being drawn for industrial use. The range of industrial-use demand should be taken into account. In special situations where the domestic water demand could significantly reduce the sprinkler water supply, an increase in the size of the pipe supplying both the domestic and sprinkler water can be justified.

FAQ [A.5.2.2]

Can a fire pump be used to increase the capacity of a water supply?

It is important to understand that fire pumps cannot create water. Fire pumps can increase the pressure and resultant flow from an existing supply of water such as a waterworks system.

Future changes in water supplies should be considered. For example, a large, established, urban supply is not likely to change greatly within a few years. However, the supply in a growing suburban industrial park might deteriorate quite rapidly as greater numbers of plants draw more water.

Dead-end mains should be avoided, if possible, by arranging for mains supplied from both directions. When private fire service mains are connected to dead-end public mains, each situation should be examined to determine if it is practical to request the water utility to loop the mains in order to obtain a more reliable supply.

Testing of Water Supply. To determine the value of public water as a supply for automatic sprinkler systems, it is generally necessary to make a flow test to determine how much water can be discharged at a residual pressure at a rate sufficient to give the required residual pressure under the roof (with the volume flow hydraulically translated to the base of the riser) — that is, a pressure head represented by the height of the building plus the required residual pressure.

The proper method of conducting this test is to use two hydrants in the vicinity of the property. The static pressure should be measured on the hydrant in front of or nearest to the property and the water allowed to flow from the hydrant next nearest the property, preferably the one farthest from the source of supply if the main is fed only one way. The residual pressure will be that indicated at the hydrant where water is not flowing.

Referring to Figure A.5.2.2, the method of conducting the flow tests is as follows:

(1) Attach the gauge to the hydrant *(A)* and obtain static pressure.
(2) Either attach a second gauge to the hydrant *(B)* or use the pitot tube at the outlet. Have hydrant *(B)* opened wide and read pressure at both hydrants.
(3) Use the pressure at *(B)* to compute the gallons flowing and read the gauge on *(A)* to determine the residual pressure or that which will be available on the top line of sprinklers in the property.

EDUFIRE.IR

Water pressure in pounds per square inch for a given height in feet equals height multiplied by 0.433.

In making flow tests, whether from hydrants or from nozzles attached to hose, always measure the size of the orifice. While hydrant outlets are usually 2½ in. (65 mm), they are sometimes smaller and occasionally larger. Underwriters Laboratories play pipe is 1⅛ in. (30 mm) and 1¾ in. (45 mm) with the tip removed, but occasionally nozzles will be 1 in. (25 mm) or 1¼ in. (32 mm), and with the tip removed the opening can be only 1½ in. (40 mm).

The pitot tube should be held approximately one-half the diameter of the hydrant or nozzle opening away from the opening. It should be held in the center of the stream, except that in using hydrant outlets the stream should be explored to ascertain the average pressure.

For further information on water supply testing, see NFPA 291.

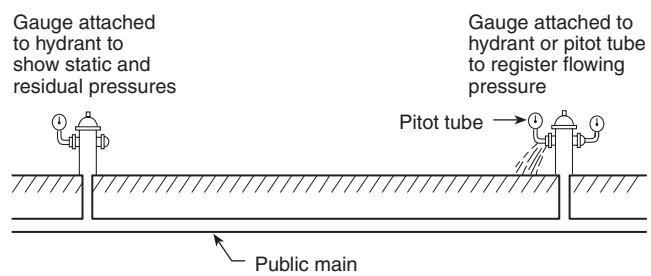

FIGURE A.5.2.2 *Method of Conducting Flow Tests.*

Pitotless devices are available for measuring velocity pressure or flow directly. The manufacturer's published instructions should be followed, and conversions of velocity pressure to flow should utilize the manufacturer's flow tables and charts in lieu of those found in NFPA 291 or standard formulas. With any method, the pressure gauges used should be accurate, calibrated within the 12-month period prior to the test, and used within their acceptable range.

Listed fire pumps installed in accordance with NFPA 20 and connected to a sufficient supply of water are an acceptable water supply source. A vertical turbine pump, such as the one shown in Exhibit 5.3, is a type of centrifugal fire pump that operates in a vertical position and is the only fire pump type permitted to take negative suction. In that position, the first impeller, or bowl, of the pump is always submerged. Therefore, the first pump impeller has a positive suction pressure on it. This type of pump, with its first impeller submerged, does not actually take suction but, rather, pumps from a water source located below the pump. One of the most common types of fire pumps installed is the horizontal split case fire pump shown in Exhibit 5.4.

SEE ALSO

The NFPA publication *Stationary Fire Pumps and Standpipe Systems Handbook* for additional information on fire pumps and their proper application.

5.2.2.1 A connection to a reliable waterworks system shall be an acceptable water supply source.

Designers and engineers should include a certain margin between the water supply and the system demand to account for future use or deterioration of the water supply. For instance, the construction of additional buildings drawing water from a common municipal supply can negatively affect the available water supply. Such a situation could result in a sprinkler system deficiency, because the water supply no longer meets the system demand. Designers and engineers who do not leave a margin between the system demand and the water supply to account for potential building development run an increased risk of having an inadequate sprinkler system in the future.

In addition, some areas can develop critical water shortages during certain times of the year, causing some water purveyors to initiate water supply reduction programs. In other cases, available water distribution system pressures and flows are intentionally reduced by trimming pumps and valves, which results in lower static and residual pressures. A safety factor increases the likelihood that these systems will perform

EDUFIRE.IR

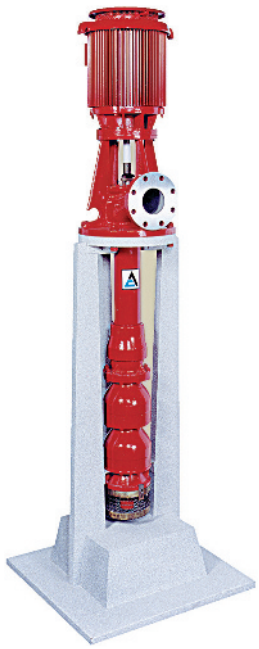

EXHIBIT 5.3 Vertical Shaft Turbine Pump. (Courtesy of A-C Fire Pump, a Xylem Brand)

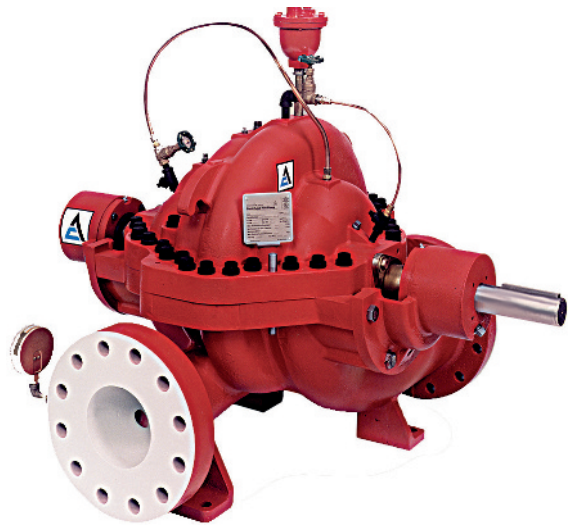

EXHIBIT 5.4 Horizontal Split Case Fire Pump. (Courtesy of A-C Fire Pump, a Xylem Brand)

adequately if gradual reductions in the water supply occur during the life of the sprinkler system. An appropriate size for the safety factor takes into account the existing water supply and any anticipated future development of the site.

5.2.2.2* The volume and pressure of a public water supply shall be determined from waterflow test data or other approved methods.

A.5.2.2.2 An adjustment to the waterflow test data to account for daily and seasonal fluctuations, possible interruption by flood or ice conditions, large simultaneous industrial use, future demand on the water supply system, or any other condition that could affect the water supply should be made as appropriate.

Proper evaluation of the waterflow test results cannot be overstressed. Adjustments need to account for all reasonable occurrences. The designer or engineer should conduct a proper evaluation to review all factors that might affect the system and should consult with the water authority.

5.2.3* Pumps. A single automatically controlled fire pump installed in accordance with NFPA 20 shall be an acceptable water supply source.

Where a waterworks system alone cannot supply the demand at the required pressure, a fire pump can be installed in accordance with NFPA 20 to provide the required flow at the necessary pressure. Exhibit 5.5 shows a public water supply connected to a private service main (installed per NFPA 24) and a fire pump.

Exhibit 5.6 shows a pressure tank serving a sprinkler system. Unlike gravity tanks or suction tanks, pressure tanks contain both water and air under pressure. A sufficient capacity of air must be available to discharge the water from the tank at the necessary rate. Exhibit 5.7 shows the water level gauge of the tank indicating sufficient air capacity. See 5.2.4 for details on water level and air pressure requirements for pressure tanks.

EDUFIRE.IR

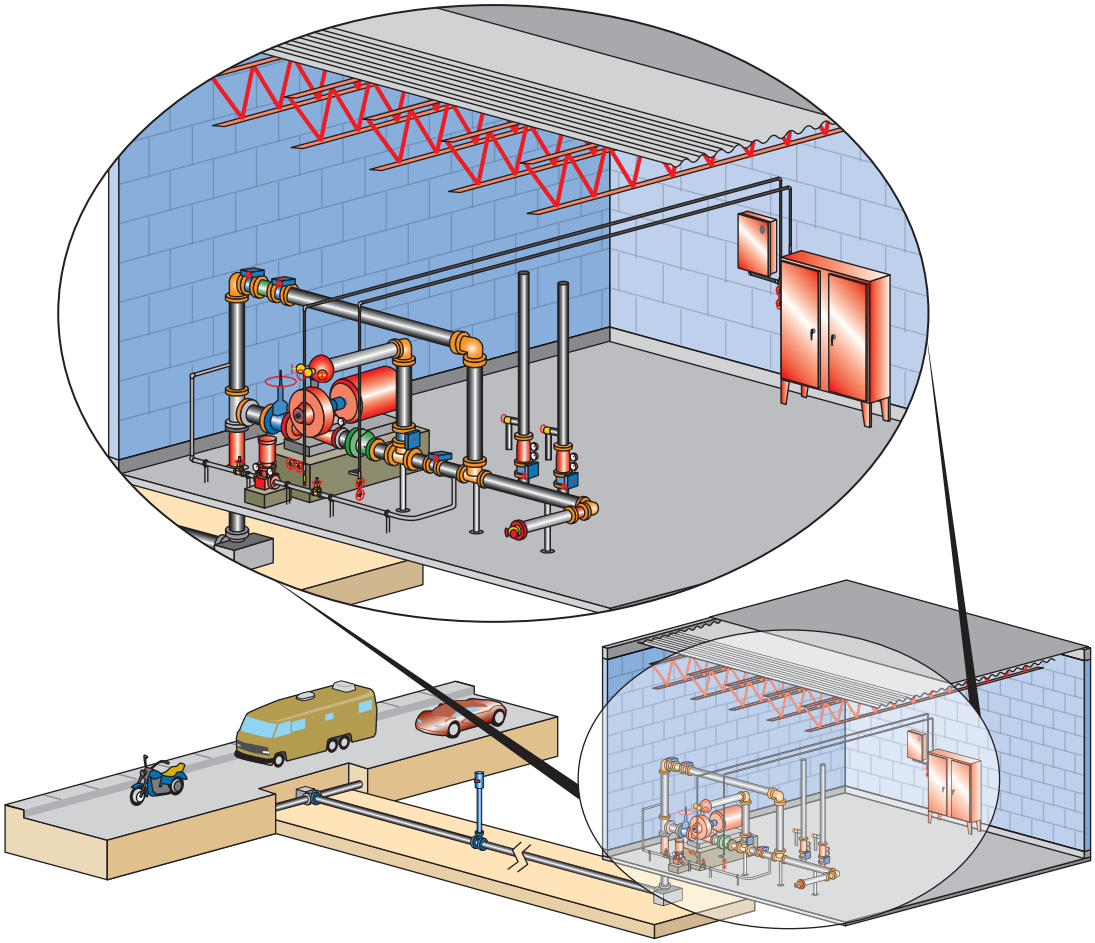

EXHIBIT 5.5 *Private Waterworks Supply with Fire Pump. (Courtesy of Stephan Laforest)*

EXHIBIT 5.6 *Pressure Tank Serving Sprinkler System. (Courtesy of the National Fire Sprinkler Association)*

EXHIBIT 5.7 *Sight Glass for Pressure Tank Indicating Water Level and Air Pressure. (Courtesy of the National Fire Sprinkler Association)*

EDUFIRE.IR

A.5.2.3 An automatically controlled vertical turbine pump taking suction from a reservoir, pond, lake, river, cistern, or well or a centrifugal pump supplied from a waterworks system connection, or tank, complies with 5.2.3.

See sections dealing with sprinkler equipment supervisory and waterflow alarm services in *NFPA 72*.

5.2.4 Pressure Tanks.

5.2.4.1 Acceptability.

5.2.4.1.1 A pressure tank installed in accordance with NFPA 22 shall be an acceptable water supply source.

5.2.4.1.2 Pressure tanks shall be provided with an approved means for automatically maintaining the required air pressure.

5.2.4.1.3 Where a pressure tank is the sole water supply, an approved trouble alarm shall also be provided to indicate low air pressure and low water level with the alarm supplied from an electrical branch circuit independent of the air compressor.

Certain features and conditions of the pressure tank should be supervised to increase the reliability of this sole source of water supply. Trouble alarms that indicate low air pressure and low water levels should be received at a constantly attended location. *NFPA 72®, National Fire Alarm and Signaling Code®*, provides additional details on acceptable supervisory methods.

5.2.4.1.4 Pressure tanks shall not be used to supply other than sprinklers and hand hose attached to sprinkler piping.

5.2.4.2 Capacity.

5.2.4.2.1 In addition to the requirements of 5.1.2, the water capacity of a pressure tank shall include the extra capacity needed to fill dry pipe or preaction systems where installed.

5.2.4.2.2 The total volume shall be based on the water capacity plus the air capacity required by 5.2.4.3.

Unlike wet pipe systems, dry pipe and preaction systems are filled with air or nitrogen during commissioning (see Sections 8.2 and 8.3 for requirements on dry pipe and preaction systems). Therefore, if a pressure tank serves as the water supply, it must be sized so that it has sufficient capacity to fill the system piping as the air or nitrogen is displaced following activation of a sprinkler(s), in addition to the capacity needed to meet the system's discharge requirements.

5.2.4.3* Water Level and Air Pressure.

A.5.2.4.3 For pipe schedule systems, the air pressure to be carried and the proper proportion of air in the tank can be determined from the following formulas where:

P = air pressure carried in pressure tank
A = proportion of air in tank
H = height of highest sprinkler above tank bottom

When the tank is placed above the highest sprinkler, use the following formula:

$$P = \frac{30}{A} - 15 \qquad \textbf{[A.5.2.4.3a]}$$

EDUFIRE.IR

If $A = ⅓$, then $P = 90 - 15 = 75$ psi (5.2 bar)
If $A = ½$, then $P = 60 - 15 = 45$ psi (3.1 bar)
If $A = ⅔$, then $P = 45 - 15 = 30$ psi (2.1 bar)

When the tank is below the level of the highest sprinkler, use the following formula:

$$P = \frac{30}{A} - 15 + \frac{0.434H}{A} \qquad \textbf{[A.5.2.4.3b]}$$

If $A = ⅓$, then $P = 75 + 1.30H$
If $A = ½$, then $P = 45 + 0.87H$
If $A = ⅔$, then $P = 30 + 0.65H$

The preceding respective air pressures are calculated to ensure that the last water will leave the tank at a pressure of 15 psi (1 bar) when the base of the tank is on a level with the highest sprinkler or at such additional pressure as is equivalent to a head corresponding to the distance between the base of the tank and the highest sprinkler when the latter is above the tank.

For hydraulically calculated systems, the following formula should be used to determine the tank pressure and ratio of air to water:

$$P_i = \frac{P_f + 15}{A} - 15 \qquad \textbf{[A.5.2.4.3c]}$$

where:

P_i = tank pressure
P_f = pressure required from hydraulic calculations
A = proportion of air

Example: Hydraulic calculations indicate 75 psi (5.2 bar) is required to supply the system. What tank pressure will be required?

$$P_i = \frac{75 + 15}{0.5} - 15$$

$$P_i = 180 - 15 = 165 \text{ psi} \qquad \textbf{[A.5.2.4.3d]}$$

For SI units, 1 ft = 0.3 m; 1 psi = 0.07 bar.

In this case, the tank would be filled with 50 percent air and 50 percent water, and the tank pressure would be 165 psi (11.4 bar). If the pressure is too high, the amount of air carried in the tank will have to be increased.

Pressure tanks should be located above the top level of sprinklers but can be located in the basement or elsewhere.

5.2.4.3.1 Pressure tanks shall be kept with a sufficient supply of water to meet the demand of the fire protection system as calculated in Chapter 27 for the duration required by Chapter 19, Chapter 20, or Chapter 26.

5.2.4.3.2 The pressure shall be sufficient to push all of the water out of the tank while maintaining the necessary residual pressure (required by Chapter 27) at the top of the system.

Table 19.3.2.1 requires that certain residual pressures be provided at the elevation of the highest sprinkler for pipe schedule systems. Table 19.3.2.1 also requires a minimum flow at the base of the riser. Residual pressure and minimum flow must be considered when a pressure tank for pipe schedule systems is being contemplated.

5.2.5 Gravity Tanks. An elevated tank installed in accordance with NFPA 22 shall be an acceptable water supply source.

EDUFIRE.IR

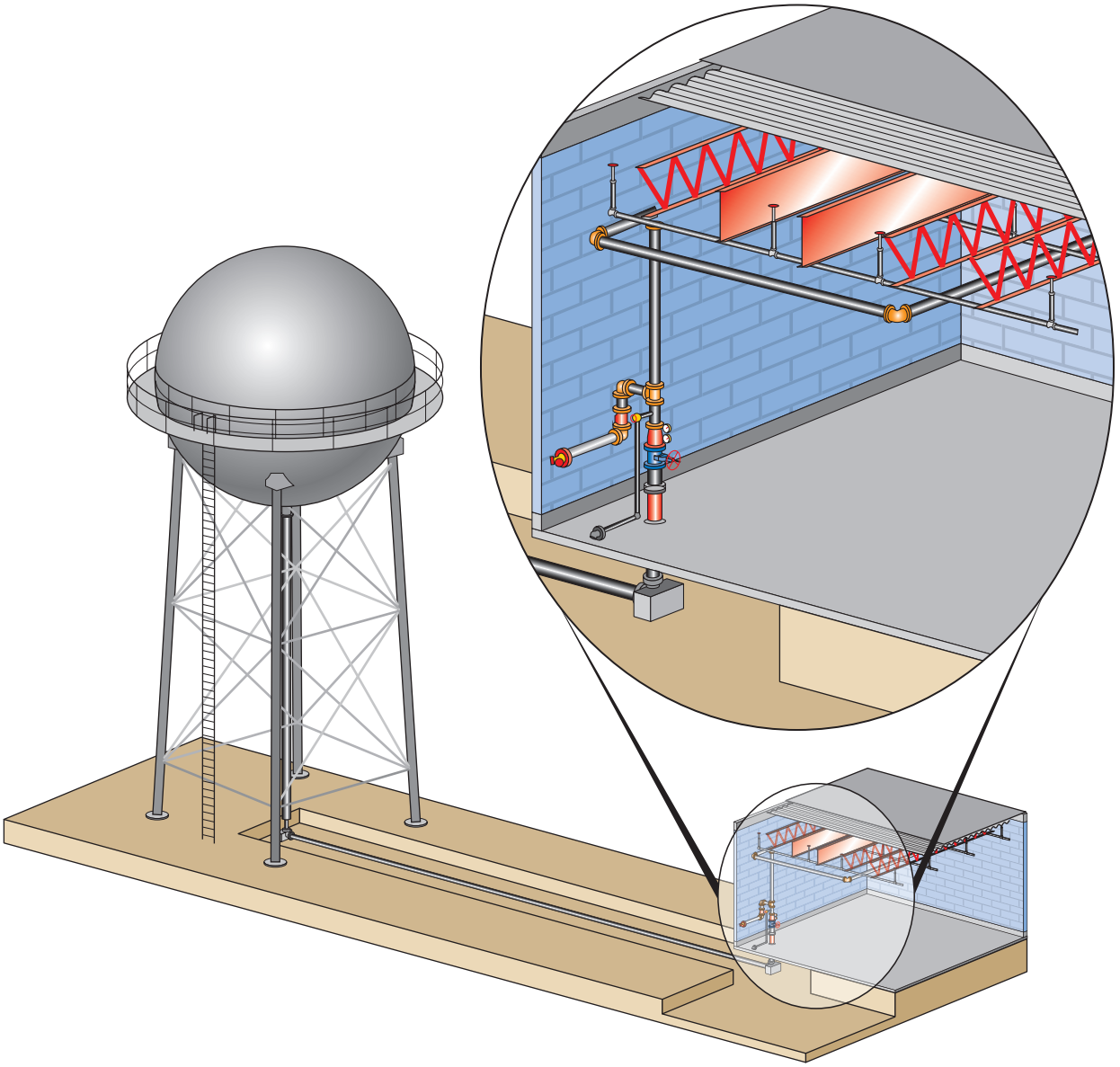

EXHIBIT 5.8 Gravity Tank with Underground Piping. (Courtesy of Stephan Laforest)

Gravity tanks are not as common as they were years ago. The availability of a wider range of fire pump capacities in terms of flow-pressure combinations has made pumps a more desirable option in many cases.

If gravity tanks are used, they must be of a capacity that satisfies the system discharge requirements of Chapter 19 through Chapter 25. If gravity tanks are also used to supply domestic or industrial needs, the arrangement must be such that the entire volume of water needed for fire protection is available when and after other demands have been placed on the tank. These tanks often include underground private water supply piping, such as the one shown in Exhibit 5.8; therefore, in addition to referencing NFPA 22 for the tank installation, NFPA 24 must also be referenced for the installation of underground piping.

5.2.6 Penstocks, Flumes, Rivers, or Lakes. Water supply connections from penstocks, flumes, rivers, lakes, or reservoirs shall be arranged to avoid mud and sediment and shall be provided with approved double removable screens or approved strainers installed in an approved manner.

EDUFIRE.IR

When contemplating the use of naturally occurring water supply sources, such as lakes, rivers, wells, and ponds, their reliability and ability to meet the system demand at all times must be verified. For example, seasonal fluctuations must be considered. Because of the degree of uncertainty associated with some naturally occurring water supplies, local regulations and insurance company guidelines might limit the use of such water supply sources.

References Cited in Commentary

National Fire Protection Association, 1 Batterymarch Park, Quincy, MA 02169-7471.

NFPA 20, *Standard for the Installation of Stationary Pumps for Fire Protection,* 2019 edition.

NFPA 22, *Standard for Water Tanks for Private Fire Protection,* 2018 edition.

NFPA 24, *Standard for the Installation of Private Fire Service Mains and Their Appurtenances,* 2019 edition.

NFPA 25, *Standard for the Inspection, Testing, and Maintenance of Water-Based Fire Protection Systems,* 2017 edition.

NFPA 72®, National Fire Alarm and Signaling Code®, 2019 edition.

NFPA 291, *Recommended Practice for Fire Flow Testing and Marking of Hydrants*, 2019 edition.

Stationary Fire Pumps and Standpipe Systems Handbook, 2019.

EDUFIRE.IR

CHAPTER

6

Installation of Underground Piping

REORGANIZATION NOTE

Chapter 6 in the 2019 edition of NFPA 13 was Chapter 10 in the 2016 edition. The entire chapter was carried over and sections renumbered to replace the Chapter 10 prefix with the Chapter 6 prefix. The only exception is 6.1.1.4, where the requirement for Dry Pipe Underground was relocated from 8.15.21 of the 2016 edition.

Chapter 6 covers the requirements for underground piping, including piping materials, fittings, joining of pipe and fittings, depth of cover, protection against freezing, protection against damage, laying of pipe, joint restraint, backfilling, and testing and acceptance.

The use of private, underground piping leading from a municipal water supply or privately owned waterworks system is one of the most common methods of supply to automatic sprinkler systems. Exhibit 6.1 shows a municipal water supply (illustrated with black piping) connected to the private water supply piping (underground piping illustrated with red piping). The jurisdiction of NFPA 24, *Standard for the Installation of Private Fire Service Mains and Their Appurtenances*, begins at the connection to the municipal water supply piping and ends within 24 in. (600 mm) of the underground piping entering the building. All piping, valves, and system appurtenances located between these connection points fall under the jurisdiction of NFPA 24.

6.1* Piping.

[**24:**10.1]

A.6.1 Copper tubing (Type K) with brazed joints conforming to Table 6.1.1.1 and Table 6.2.1.1 is acceptable for underground service.

(1) *Listing and labeling.* Certification organizations list or label the following:

(a) Cast iron and ductile iron pipe (cement-lined and unlined, coated and uncoated)
(b) Steel pipe
(c) Copper pipe
(d) Fiberglass filament-wound epoxy pipe and couplings
(e) Polyethylene pipe
(f) Polyvinyl chloride (PVC) pipe and couplings
(g) Reinforced concrete pipe (cylinder pipe, nonprestressed and prestressed)

[**24:**A.10.1]

FAQ [6.1]

Are the underground requirements in NFPA 13 the same as in NFPA 24?

The wording in Chapter 6 of NFPA 13 is extracted directly from Chapter 10 of NFPA 24. As such, the two chapters are identical, including the text numbering (other than the chapter prefixes), the tables, and the figures. The inclusion of this material in NFPA 13 makes it easier for the reader to find the requirements for fire main piping supplying sprinkler systems, allows for better coordination between the two standards, and ensures uniformity in the requirements for underground piping serving water-based fire protection systems.

EDUFIRE.IR

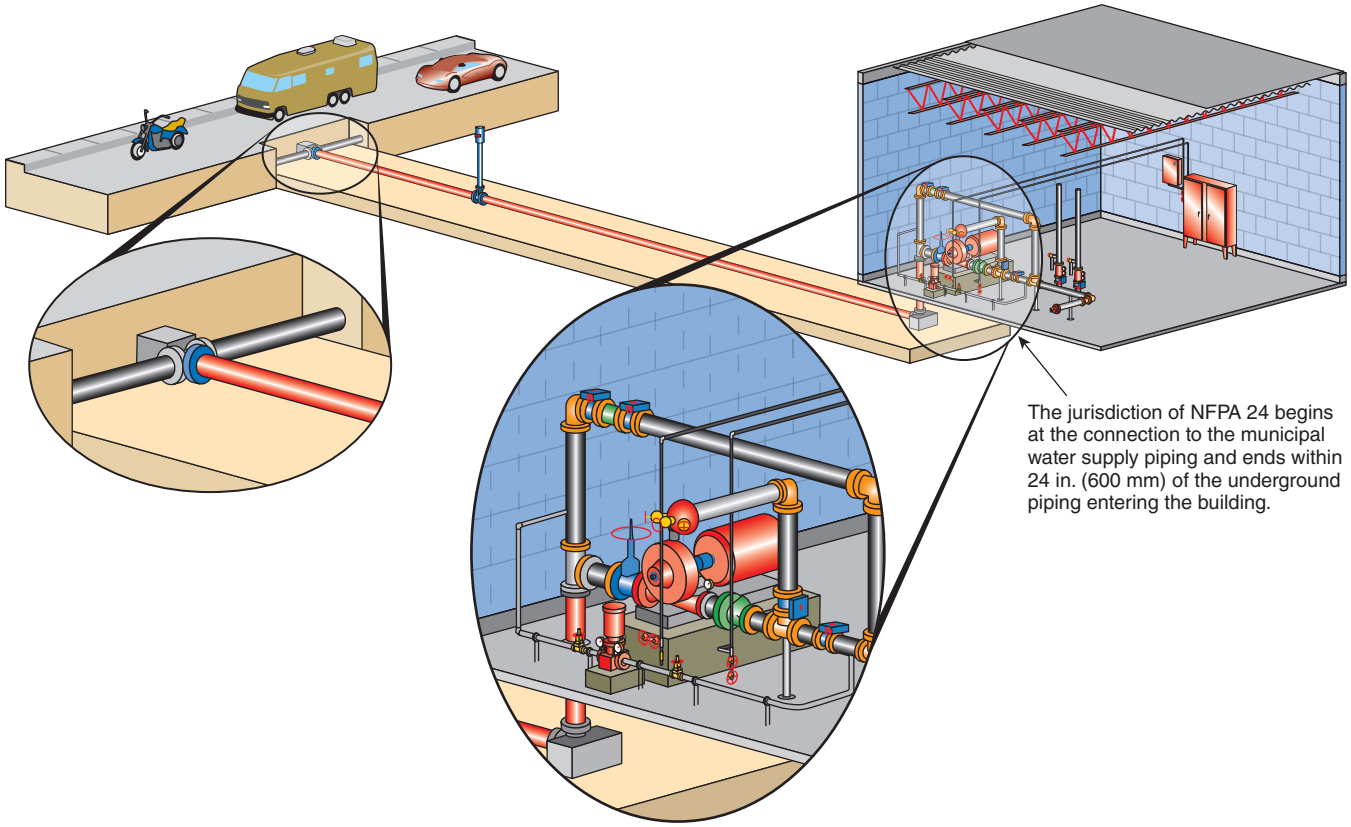

EXHIBIT 6.1 Underground Piping Connecting Municipal Supply Pipe to Fire Pump. (Courtesy of Stephan Laforest.)

FAQ [6.1.1]

Does 6.1.1 require that all piping utilized underground be listed for fire protection service?

Underground pipe must meet either of the following criteria:

1. Be listed for fire protection service
2. Comply with the American Water Works Association (AWWA) or ASTM International standards specified in Table 6.1.1.1

This issue of listing or compliance with AWWA or ASTM had caused some confusion but was resolved in the 2010 edition following the issuance of a formal interpretation in 2007 that clarified certain types of products are acceptable based on listings alone, such as cross-linked polyethylene, CPVC, and fiberglass.

6.1.1* All piping used in private fire service mains shall be in accordance with 6.1.1.1, 6.1.1.2, or 6.1.1.3. [**24:**10.1.1]

A.6.1.1 The type and class of pipe for a particular underground installation should be determined through consideration of the following factors:

(1) Maximum system working pressure
(2) Maximum pressure from pressure surges and anticipated frequency of surges
(3) Depth at which the pipe is to be installed
(4) Soil conditions
(5) Corrosion
(6) Susceptibility of pipe to external loads, including earth loads, installation beneath buildings, and traffic or vehicle loads

The following pipe design manuals and standards can be used as guides:

(1) AWWA C150/A21.50, *Thickness Design of Ductile-Iron Pipe*
(2) AWWA M23, *PVC Pipe — Design and Installation*
(3) AWWA M55, *PE Pipe — Design and Installation*
(4) AWWA M41, *Ductile-Iron Pipe and Fittings*
(5) *Concrete Pipe Handbook*, American Concrete Pipe Association

[**24:**A.10.1.1]

EDUFIRE.IR

6.1.1.1 Listing. Piping manufactured in accordance with Table 6.1.1.1 shall be permitted to be used. [**24:**10.1.1.1]

TABLE 6.1.1.1 *Manufacturing Standards for Underground Pipe*

Materials and Dimensions	*Standard*
Ductile Iron	
Cement-Mortar Lining for Ductile-Iron Pipe and Fittings	AWWA C104/A21.4
Polyethylene Encasement for Ductile-Iron Pipe Systems	AWWA C105/A21.5
Rubber-Gasket Joints for Ductile-Iron Pressure Pipe and Fittings	AWWA C111/A21.11
Flanged Ductile-Iron Pipe with Ductile-Iron or Gray-Iron Threaded Flanges	AWWA C115/A21.15
Thickness Design of Ductile-Iron Pipe	AWWA C150/A21.50
Ductile-Iron Pipe, Centrifugally Cast	AWWA C151/A21.51
Standard for the Installation of Ductile Iron Water Mains and Their Appurtenances	AWWA C600
Concrete	
Reinforced Concrete Pressure Pipe, Steel-Cylinder Type	AWWA C300
Prestressed Concrete Pressure Pipe, Steel-Cylinder Type	AWWA C301
Reinforced Concrete Pressure Pipe, Non-Cylinder Type	AWWA C302
Reinforced Concrete Pressure Pipe, Steel-Cylinder Type, Pretensioned	AWWA C303
Cement-Mortar Lining of Water Pipe Lines in Place, 4 in. (100 mm) and Larger	AWWA C602
Plastic	
Polyvinyl Chloride (PVC) Pressure Pipe, 4 in. Through 12 in.(100 mm Through 300 mm), for Water Transmission and Distribution	AWWA C900
Polyvinyl Chloride (PVC) Pressure Pipe and Fabricated Fittings, 14 in. Through 48 in. (350 mm Through 1200 mm), for Water Transmission and Distribution	AWWA C905
Polyethylene (PE) Pressure Pipe and Fittings, 4 in. (100 mm) Through 63 in. (1575 mm) for Waterworks	AWWA C906
Molecularly Oriented Polyvinyl Chloride (PVCO) 4 in. Through 24 in. (100 mm Through 600 mm) for Water, Wastewater, and Reclaimed Water Service	AWWA C909
Brass	
Specification for Seamless Red Brass Pipe, Standard Sizes	ASTM B43
Copper	
Specification for Seamless Copper Tube	ASTM B75/B75M
Specification for Seamless Copper Water Tube	ASTM B88
Requirements for Wrought Seamless Copper and Copper-Alloy Tube	ASTM B251
Stainless Steel	
Specification for Standard Specification for Seamless, Welded, and Heavily Cold Worked Austenitic Stainless Steel Pipes	ASTM A312/312M

[**24:**Table 10.1.1.1]

FAQ [Table 6.1.1.1]

Several of the AWWA standards referenced in Table 6.1.1.1 address steel pipe. Does this indicate that steel pipe is permitted for general underground use if it meets the applicable AWWA standards in Table 6.1.1.1?

Although several of the standards listed in Table 6.1.1.1 deal with steel pipe, flanges, welding, and installation, steel pipe is not permitted to be used in underground fire protection service, except for fire department connections or unless specially listed for this service. (See 6.1.2 and 6.1.3.) Steel pipe can be used for piping to a fire department connection because the fire department connection is an auxiliary, rather than a primary, water supply for the sprinkler system. Both coating and wrapping are required when internally galvanized steel pipe is used underground between an exterior fire department connection and the check valve where it connects to the system. Coating is also required for clamps, tie rods, and all bolted joint accessories.

The use of plastic pipe, including polyvinyl chloride (PVC), polyethylene (PE), and oriented polyvinyl chloride (PVCO), are now included in Table 6.1.1.1 for use in underground systems, provided the piping is manufactured in accordance with the referenced AWWA standards. Listings are available for PVC and PVCO pipe and couplings for underground fire service.

EDUFIRE.IR

6.1.1.2 Piping specifically listed for use in private fire service mains shall be permitted to be used. [**24:**10.1.1.2]

6.1.1.2.1 Where listed pipe is used, it shall be installed in accordance with the listing limitations including installation instructions. [**24:**10.1.1.2.1]

6.1.1.2.2 Where listing limitations or installation instructions differ from the requirements of this standard, the listing limitations and installation instructions shall apply. [**24:**10.1.1.2.2]

6.1.1.3 Steel piping manufactured in accordance with Table 6.1.1.3 that is externally coated and wrapped and internally galvanized shall be permitted to be used between the hose coupling(s) on the fire department connection and the check valve installed in the fire department connection piping. [**24:**10.1.1.3]

TABLE 6.1.1.3 *Steel Piping for Fire Department Connections*

Materials and Dimensions	*Standard*
Standard Specification for Black and Hot-Dipped Zinc-Coated (Galvanized) Welded and Seamless Steel Pipe for Fire Protection Use	ASTM A795/A795M
Standard Specification for Pipe, Steel, Black and Hot-Dipped, Zinc-Coated, Welded and Seamless	ASTM A53/A53M
Standard Specification for Electric-Resistance-Welded Steel Pipe	ASTM A135/A135M

[**24:**Table 10.1.1.3]

6.1.1.3.1 External coating and wrapping as required by 6.1.1.3 shall be approved. [**24:**10.1.1.3.1]

6.1.1.4 Dry Pipe Underground.

6.1.1.4.1 Where necessary to place pipe that will be under air pressure underground, the pipe shall be protected against corrosion.

6.1.1.4.2 Unprotected cast-iron or ductile-iron pipe shall be permitted where joined with a gasketed joint listed for air service underground.

6.1.2* All piping used in private fire service mains shall be rated for the maximum system working pressure to which the piping is exposed to but shall not be rated at less than 150 psi (10.3 bar). [**24:**10.1.2]

A.6.1.2 For underground system components, a minimum system pressure rating of 150 psi (10 bar) is specified in 6.1.2, based on satisfactory historical performance. Also, this pressure rating reflects that of the components typically used underground, such as piping, valves, and fittings. Where system pressures are expected to exceed pressures of 150 psi (10 bar), system components and materials manufactured and listed for higher pressures should be used. Systems that do not incorporate a fire pump or are not part of a combined standpipe system do not typically experience pressures exceeding 150 psi (10 bar) in underground piping. However, each system should be evaluated on an individual basis. It is not the intent of this section to include the pressures generated through fire department connections as part of the maximum working pressure. [**24:**A.10.1.2]

Underground mains can and should have rated working pressures in excess of 150 psi (10.3 bar) where the system underground is expected to experience pressures in excess of 150 psi (10.3 bar).

FAQ [6.1.3]

For calculation of lined underground piping, should the actual internal diameter be used?

Care should be taken in using hydraulic calculations of underground piping, since manufacturers generally do not include the thickness of linings when providing information on the internal diameters of their piping products, and the thickness of the lining will vary with each manufacturer. Therefore, to calculate underground lined piping, it is imperative that the actual internal diameter of the pipe, accounting for any lining material, be utilized throughout the calculations.

6.1.3* When lined piping is used, the manufacturer's literature for internal diameter shall be used for all hydraulic calculations. [**24:**10.1.3]

AWWA C203, *Coal-Tar Protective Coatings and Linings for Steel Water Pipelines*, is a standard for coating materials referenced in Table 6.1.1.1, but other bituminous (coal-tar) coatings are available.

EDUFIRE.IR

AWWA C105/A21.5, *Polyethylene Encasement for Ductile Iron Pipe Systems*, another of the standards referenced in Table 6.1.1.1, provides useful installation guidance where wrapping is required. The standard basically requires that high-density polyethylene tubes or sheets with a minimum nominal thickness of 0.004 in. (0.1 mm) or low-density polyethylene tubes or sheets with a minimum nominal thickness of 0.008 in. (0.2 mm) be used for the wrapping. The minimum width to be used is based on the nominal pipe diameter, as shown in Commentary Table 6.1.

The polyethylene is not intended to create an airtight or watertight enclosure but to prevent contact between the pipe and surrounding backfill/bedding material. Slack must be provided to prevent stretching of the polyethylene where it bridges irregular surfaces such as bolted joints, anticipating backfilling operations. Cuts, tears, and punctures must be repaired. Overlaps must be a minimum of 12 in. (300 mm) and must be secured using tape, string, or tie straps. Overlaps to pipe areas not wrapped must extend a minimum of 36 in. (900 mm) and be circumferentially taped. Where piping is installed below the water table, or in areas affected by tidal flooding, the wrapping must be circumferentially taped every 24 in. (600 mm).

COMMENTARY TABLE 6.1 *Minimum Width of High-Density Polyethylene Flat Tubes and Sheets*

Nominal Pipe Diameter		Minimum Width of Flat Tube		Minimum Width of Sheet	
in.	mm	in.	mm	in.	mm
3	75	14	350	28	700
4	100	14	350	28	700
6	150	16	400	32	800
8	200	20	500	40	1000
10	250	24	600	48	1200
12	300	27	670	54	1350
14	350	30	750	60	1500

A.6.1.3 See Table A.6.1.3. [**24:**A.10.1.3]

Nominal diameters of available listed, lined ferrous metal pipe range from 3 in. to 24 in. (75 mm to 600 mm). Ductile iron pipe is generally cement-mortar lined in accordance with AWWA C104/A21.4, *Cement-Mortar Lining for Ductile Iron Pipe and Fittings*. The minimum thickness of the lining is 1/16 in. (1.6 mm) for pipe sizes 3 in. to 12 in. (75 mm to 300 mm) in nominal diameter and is greater for larger diameter pipe.

TABLE A.6.1.3 *Internal Diameters (IDs) for Cement-Lined Ductile Iron Pipe*

Pipe Size in.	OD (in.)	Pressure Class	Thickness Class	Wall Thickness		Minimum Lining Thickness* [in. (mm)]	ID with Lining	
				in.	mm		in.	mm
3 in (80 mm)	3.96 (100 mm)	350	51	0.25	6	1/16 in. (1.6 mm)	3.34	84
3 in (80 mm)	3.96 (100 mm)	350	52	0.28	7	1/16 in. (1.6 mm)	3.28	82
3 in (80 mm)	3.96 (100 mm)	350	53	0.31	8	1/16 in. (1.6 mm)	3.22	81
3 in (80 mm)	3.96 (100 mm)	350	54	0.34	9	1/16 in. (1.6 mm)	3.16	79
3 in (80 mm)	3.96 (100 mm)	350	55	0.37	9	1/16 in. (1.6 mm)	3.1	78
3 in (80 mm)	3.96 (100 mm)	350	56	0.4	10	1/16 in. (1.6 mm)	3.04	76

(Continues)

EDUFIRE.IR

TABLE A.6.1.3 Continued

Pipe Size in.	OD (in.)	Pressure Class	Thickness Class	Wall Thickness in.	Wall Thickness mm	Minimum Lining Thickness* [in. (mm)]	ID with Lining in.	ID with Lining mm
4 in. (100 mm)	4.8 in. (120 mm)	350		0.25	6	1/16 in. (1.6 mm)	4.18	105
4 in. (100 mm)	4.8 in. (120 mm)	350	51	0.26	7	1/16 in. (1.6 mm)	4.16	104
4 in. (100 mm)	4.8 in. (120 mm)	350	52	0.29	7	1/16 in. (1.6 mm)	4.1	103
4 in. (100 mm)	4.8 in. (120 mm)	350	53	0.32	8	1/16 in. (1.6 mm)	4.04	101
4 in. (100 mm)	4.8 in. (120 mm)	350	54	0.35	9	1/16 in. (1.6 mm)	3.98	100
4 in. (100 mm)	4.8 in. (120 mm)	350	55	0.38	10	1/16 in. (1.6 mm)	3.92	98
4 in. (100 mm)	4.8 in. (120 mm)	350	56	0.41	10	1/16 in. (1.6 mm)	3.86	97
6 in. (150 mm)	6.90 in. (175 mm)	350		0.25	6	1/16 in. (1.6 mm)	6.28	157
6 in. (150 mm)	6.90 in. (175 mm)	350	50	0.25	6	1/16 in. (1.6 mm)	6.28	157
6 in. (150 mm)	6.90 in. (175 mm)	350	51	0.28	7	1/16 in. (1.6 mm)	6.22	156
6 in. (150 mm)	6.90 in. (175 mm)	350	52	0.31	8	1/16 in. (1.6 mm)	6.16	154
6 in. (150 mm)	6.90 in. (175 mm)	350	53	0.34	9	1/16 in. (1.6 mm)	6.1	153
6 in. (150 mm)	6.90 in. (175 mm)	350	54	0.37	9	1/16 in. (1.6 mm)	6.04	151
6 in. (150 mm)	6.90 in. (175 mm)	350	55	0.4	10	1/16 in. (1.6 mm)	5.98	150
6 in. (150 mm)	6.90 in. (175 mm)	350	56	0.43	11	1/16 in. (1.6 mm)	5.92	148
8 in. (200 mm)	9.05 in. (225 mm)	350		0.25	6	1/16 in. (1.6 mm)	8.43	211
8 in. (200 mm)	9.05 in. (225 mm)	350	50	0.27	7	1/16 in. (1.6 mm)	8.39	210
8 in. (200 mm)	9.05 in. (225 mm)	350	51	0.3	8	1/16 in. (1.6 mm)	8.33	208
8 in. (200 mm)	9.05 in. (225 mm)	350	52	0.33	8	1/16 in. (1.6 mm)	8.27	207
8 in. (200 mm)	9.05 in. (225 mm)	350	53	0.36	9	1/16 in. (1.6 mm)	8.21	205
8 in. (200 mm)	9.05 in. (225 mm)	350	54	0.39	10	1/16 in. (1.6 mm)	8.15	204
8 in. (200 mm)	9.05 in. (225 mm)	350	55	0.42	11	1/16 in. (1.6 mm)	8.09	202
8 in. (200 mm)	9.05 in. (225 mm)	350	56	0.45	11	1/16 in. (1.6 mm)	8.03	201
10 in. (250 mm)	11.1 (280 mm)	350		0.26	7	1/16 in. (1.6 mm)	10.46	262
10 in. (250 mm)	11.1 (280 mm)	350	50	0.29	7	1/16 in. (1.6 mm)	10.4	260
10 in. (250 mm)	11.1 (280 mm)	350	51	0.32	8	1/16 in. (1.6 mm)	10.34	259
10 in. (250 mm)	11.1 (280 mm)	350	52	0.35	9	1/16 in. (1.6 mm)	10.28	257
10 in. (250 mm)	11.1 (280 mm)	350	53	0.38	10	1/16 in. (1.6 mm)	10.22	256
10 in. (250 mm)	11.1 (280 mm)	350	54	0.41	10	1/16 in. (1.6 mm)	10.16	254
10 in. (250 mm)	11.1 (280 mm)	350	55	0.44	11	1/16 in. (1.6 mm)	10.1	253
10 in. (250 mm)	11.1 (280 mm)	350	56	0.47	12	1/16 in. (1.6 mm)	10.04	251
12 in. (300 mm)	13.2 in. (330 mm)	350		0.28	7	1/16 in. (1.6 mm)	12.52	313
12 in. (300 mm)	13.2 in. (330 mm)	350	50	0.31	8	1/16 in. (1.6 mm)	12.46	312
12 in. (300 mm)	13.2 in. (330 mm)	350	51	0.34	9	1/16 in. (1.6 mm)	12.4	310
12 in. (300 mm)	13.2 in. (330 mm)	350	52	0.37	9	1/16 in. (1.6 mm)	12.34	309
12 in. (300 mm)	13.2 in. (330 mm)	350	53	0.4	10	1/16 in. (1.6 mm)	12.28	307
12 in. (300 mm)	13.2 in. (330 mm)	350	54	0.43	11	1/16 in. (1.6 mm)	12.22	306
12 in. (300 mm)	13.2 in. (330 mm)	350	55	0.46	12	1/16 in. (1.6 mm)	12.16	304
12 in. (300 mm)	13.2 in. (330 mm)	350	56	0.49	12	1/16 in. (1.6 mm)	12.1	303
14 in. (350 mm)	15.3 in. (385 mm)	250		0.28	7	3/32 in. (2 mm)	14.55	364
14 in. (350 mm)	15.3 in. (385 mm)	300		0.3	8	3/32 in. (2 mm)	14.51	363
14 in. (350 mm)	15.3 in. (385 mm)	350		0.31	8	3/32 in. (2 mm)	14.49	362
14 in. (350 mm)	15.3 in. (385 mm)		50	0.33	8	3/32 in. (2 mm)	14.45	361
14 in. (350 mm)	15.3 in. (385 mm)		51	0.36	9	3/32 in. (2 mm)	14.39	360
14 in. (350 mm)	15.3 in. (385 mm)		52	0.39	10	3/32 in. (2 mm)	14.33	358
14 in. (350 mm)	15.3 in. (385 mm)		53	0.42	11	3/32 in. (2 mm)	14.27	357
14 in. (350 mm)	15.3 in. (385 mm)		54	0.45	11	3/32 in. (2 mm)	14.21	355
14 in. (350 mm)	15.3 in. (385 mm)		55	0.48	12	3/32 in. (2 mm)	14.15	354
14 in. (350 mm)	15.3 in. (385 mm)		56	0.51	13	3/32 in. (2 mm)	14.09	352

EDUFIRE.IR

TABLE A.6.1.3 Continued

Pipe Size in.	OD (in.)	Pressure Class	Thickness Class	Wall Thickness in.	Wall Thickness mm	Minimum Lining Thickness* [in. (mm)]	ID with Lining in.	ID with Lining mm
16 in. (400 mm)	17.4 in. (435 mm)	250		0.3	8	3/32 in. (2 mm)	16.61	415
16 in. (400 mm)	17.4 in. (435 mm)	300		0.32	8	3/32 in. (2 mm)	16.57	414
16 in. (400 mm)	17.4 in. (435 mm)	350		0.34	9	3/32 in. (2 mm)	16.53	413
16 in. (400 mm)	17.4 in. (435 mm)		50	0.34	9	3/32 in. (2 mm)	16.53	413
16 in. (400 mm)	17.4 in. (435 mm)		51	0.37	9	3/32 in. (2 mm)	16.47	412
16 in. (400 mm)	17.4 in. (435 mm)		52	0.4	10	3/32 in. (2 mm)	16.41	410
16 in. (400 mm)	17.4 in. (435 mm)		53	0.43	11	3/32 in. (2 mm)	16.35	409
16 in. (400 mm)	17.4 in. (435 mm)		54	0.46	12	3/32 in. (2 mm)	16.29	407
16 in. (400 mm)	17.4 in. (435 mm)		55	0.49	12	3/32 in. (2 mm)	16.23	406
16 in. (400 mm)	17.4 in. (435 mm)		56	0.52	13	3/32 in. (2 mm)	16.17	404
18 in. (450 mm)	19.5 in. (488 mm)	250		0.31	8	3/32 in. (2 mm)	18.69	467
18 in. (450 mm)	19.5 in. (488 mm)	300		0.34	9	3/32 in. (2 mm)	18.63	466
18 in. (450 mm)	19.5 in. (488 mm)	350		0.36	9	3/32 in. (2 mm)	18.59	465
18 in. (450 mm)	19.5 in. (488 mm)		50	0.35	9	3/32 in. (2 mm)	18.61	465
18 in. (450 mm)	19.5 in. (488 mm)		51	0.35	9	3/32 in. (2 mm)	18.61	465
18 in. (450 mm)	19.5 in. (488 mm)		52	0.41	10	3/32 in. (2 mm)	18.49	462
18 in. (450 mm)	19.5 in. (488 mm)		53	0.44	11	3/32 in. (2 mm)	18.43	461
18 in. (450 mm)	19.5 in. (488 mm)		54	0.47	12	3/32 in. (2 mm)	18.37	459
18 in. (450 mm)	19.5 in. (488 mm)		55	0.5	13	3/32 in. (2 mm)	18.31	458
18 in. (450 mm)	19.5 in. (488 mm)		56	0.53	13	3/32 in. (2 mm)	18.25	456
20 in. (500 mm)	21.6 in. (540 mm)	250		0.33	8	3/32 in. (2 mm)	20.75	519
20 in. (500 mm)	21.6 in. (540 mm)	300		0.36	9	3/32 in. (2 mm)	20.69	517
20 in. (500 mm)	21.6 in. (540 mm)	350		0.38	10	3/32 in. (2 mm)	20.65	516
20 in. (500 mm)	21.6 in. (540 mm)		50	0.36	9	3/32 in. (2 mm)	20.69	517
20 in. (500 mm)	21.6 in. (540 mm)		51	0.39	10	3/32 in. (2 mm)	20.63	516
20 in. (500 mm)	21.6 in. (540 mm)		52	0.42	11	3/32 in. (2 mm)	20.57	514
20 in. (500 mm)	21.6 in. (540 mm)		53	0.45	11	3/32 in. (2 mm)	20.51	513
20 in. (500 mm)	21.6 in. (540 mm)		54	0.48	12	3/32 in. (2 mm)	20.45	511
20 in. (500 mm)	21.6 in. (540 mm)		55	0.51	13	3/32 in. (2 mm)	20.39	510
20 in. (500 mm)	21.6 in. (540 mm)		56	0.54	14	3/32 in. (2 mm)	20.33	508
24 in. (600 mm)	25.8 in. (645 mm)	200		0.33	8	3/32 in. (2 mm)	24.95	624
24 in. (600 mm)	25.8 in. (645 mm)	250		0.37	9	3/32 in. (2 mm)	24.87	622
24 in. (600 mm)	25.8 in. (645 mm)	300		0.4	10	3/32 in. (2 mm)	24.81	620
24 in. (600 mm)	25.8 in. (645 mm)	350		0.43	11	3/32 in. (2 mm)	24.75	619
24 in. (600 mm)	25.8 in. (645 mm)		50	0.38	10	3/32 in. (2 mm)	24.85	621
24 in. (600 mm)	25.8 in. (645 mm)		51	0.41	10	3/32 in. (2 mm)	24.79	620
24 in. (600 mm)	25.8 in. (645 mm)		52	0.44	11	3/32 in. (2 mm)	24.73	618
24 in. (600 mm)	25.8 in. (645 mm)		53	0.47	12	3/32 in. (2 mm)	24.67	617
24 in. (600 mm)	25.8 in. (645 mm)		54	0.5	13	3/32 in. (2 mm)	24.61	615
24 in. (600 mm)	25.8 in. (645 mm)		55	0.53	13	3/32 in. (2 mm)	24.55	614
24 in. (600 mm)	25.8 in. (645 mm)		56	0.56	14	3/32 in. (2 mm)	24.49	612

ID: internal diameter; OD: outside diameter.

* This table is appropriate for single lining thickness only. The actual lining thickness should be obtained from the manufacturer.

EDUFIRE.IR

N **6.1.4*** Underground piping shall be permitted to extend into the building through the slab or wall not more than 24 in. (600 mm). [**24:**10.1.4]

FAQ [6.1.4]

Where plastic pipe is utilized underground, is it acceptable to transition to steel pipe above ground?

The use of plastic pipe above ground for fire main service is not permitted, so it is necessary to transition to a piping material that meets the requirements of Chapters 7 and 16 of NFPA 13.

A.6.1.4 Where nonmetallic underground piping is provided above grade or inside a building, the following should be considered:

(1) Exposure from direct rays of sunlight
(2) Compatibility with chemicals such as floor coatings and termiticides/insecticides
(3) Support of piping and appurtenances attached thereto (e.g., sprinkler risers, backflow preventers)

[**24:**A.10.1.4]

Although 5.1.6.1 addresses the physical protection of the transition piece, there are other considerations for plastic pipe where installed above ground, including potential degradation of the piping material due to exposure to sunlight (UV) and chemical interactions. An often overlooked materials issue is that most nonmetallic underground piping brought up through the floor of a building is vulnerable to fire exposure or corrosive liquids spills. Regardless of material type, a section of underground pipe is allowed to extend above the floor level up to a maximum of 24 in. (600 mm) (see 6.1.4). Possible methods to protect the exposed section of underground pipe are to encase it in concrete, provide curbing, or provide a barrier.

SEE ALSO

The requirements in 5.1.6.1 for more guidance on the transition from underground to aboveground piping and the need to protect the transition piece from damage.

6.2 Fittings.

[**24:**10.2]

6.2.1 All fittings used in private fire service mains shall be in accordance with 6.2.1.1 or 6.2.1.2. [**24:**10.2.1]

6.2.1.1 Fittings manufactured in accordance with Table 6.2.1.1 shall be permitted to be used. [**24:**10.2.1.1]

TABLE 6.2.1.1 *Fittings Materials and Dimensions*

Materials and Dimensions	*Standard*
Cast Iron	
Gray Iron Threaded Fittings, Classes 125 and 250	ASME B16.4
Gray Iron Pipe Flanges and Flanged Fittings, Classes 25, 125, and 250	ASME B16.1
Ductile Iron	
Ductile-Iron and Gray-Iron Fittings	AWWA C110/A21.10
Ductile-Iron Compact Fittings	AWWA C153/A21.53
Malleable Iron	
Malleable Iron Threaded Fittings, Classes 150 and 300	ASME B16.3

[**24:**Table 10.2.1.1]

EDUFIRE.IR

6.2.1.2 Special Listed Fittings. Fittings specifically listed for use in private fire service mains shall be permitted to be used. [**24:**10.2.1.2]

6.2.1.2.1 Where listed fittings are used, they shall be installed in accordance with their listing limitations including installation instructions. [**24:**10.2.1.2.1]

6.2.1.2.2 Where listing limitations or installation instructions differ from the requirements of this standard, the listing limitations and installation instructions shall apply. [**24:**10.2.1.2.2]

6.2.2 All fittings used in private fire service mains shall be rated for the maximum system working pressure to which the fittings are exposed, but shall not be rated at less than 150 psi (10.3 bar). [**24:**10.2.2]

6.2.3 Where fittings installed in a private fire service main must be installed above grade, the fittings shall conform to NFPA 13. [**24:**10.2.3]

6.2.3.1 Fittings in accordance with 6.2.1 shall be permitted for the transition to the above ground piping or fittings. [**24:**10.2.3.1]

6.3 Connection of Pipe, Fittings, and Appurtenances.

[**24:**10.3]

Although 6.3.1 and 6.2.1 simply require that buried joints be approved and that buried fittings be of an approved type, acceptable joining methods for listed piping are generally controlled as part of the pipe listing. Both ductile iron and PVC pipe are generally joined by bell and spigot ends in conjunction with rubber gaskets or by listed mechanical joints. A simple rubber-gasket joint is termed a *push-on joint*, in which a single rubber-ring gasket is fitted into the recess of a bell end of a length of pipe and is compressed by the plain end of the entering pipe, forming a seal. The gasket and the annular recess are specially shaped to lock the gasket in place against displacement. AWWA C111/A21.11, *Rubber-Gasket Joints for Ductile Iron Pressure Pipe and Fittings,* which is referenced in Table 6.1.1.1, requires that lubricants used in conjunction with push-on joints be labeled with the trade name or trademark and the pipe manufacturer's name to ensure compatibility with gasket material.

6.3.1* Connection of all fittings and appurtenances to piping shall be in accordance with Section 6.3. [**24:**10.3.1]

A.6.3.1 The following standards apply to joints used with the various types of pipe:

(1) ASME B16.1, *Gray Iron Pipe Flanges and Flanged Fittings Classes 25, 125, and 250*
(2) AWWA C111/A21.11, *Rubber-Gasket Joints for Ductile-Iron Pressure Pipe and Fittings*
(3) AWWA C115/A21.15, *Flanged Ductile-Iron Pipe with Ductile-Iron or Gray-Iron Threaded Flanges*
(4) AWWA C206, *Field Welding of Steel Water Pipe*
(5) AWWA C606, *Grooved and Shouldered Joints*

[**24:**A.10.3.1]

6.3.2 Connections of pipe and fittings indicated in Table 6.1.1.1 and Table 6.2.1.1 shall be in accordance with the referenced standard in the table. [**24:**10.3.2]

EDUFIRE.IR

6.3.3 Listed Connections. Connections utilizing listed products shall be in accordance with the listing limitations and the manufacturer's installation instructions. [**24:**10.3.3]

6.3.3.1 Where listing limitations or installation instructions differ from the requirements of this standard, the listing limitations and installation instructions shall apply. [**24:**10.3.3.1]

6.3.4 Threaded Pipe and Fittings. Where pipe, fittings or appurtenances are connected using threads, all threads shall be in accordance with ASME B1.20.1, *Pipe Threads, General Purpose (Inch).* [**24:**10.3.4]

6.3.5 Grooved Connections. Where pipe, fittings, or appurtenances are connected using grooves, they shall be connected in accordance with 6.3.5.1 through 6.3.5.3. [**24:**10.3.5]

6.3.5.1 Pipe, fittings, and appurtenances to be joined with grooved couplings shall contain cut, rolled, or cast grooves that are dimensionally compatible with the couplings. [**24:**10.3.5.1]

6.3.5.2 Pipe, fittings, and appurtenances that are connected with grooved couplings and are part of a listed assembly shall be permitted to be used. [**24:**10.3.5.2]

6.3.5.3* Pipe joined with grooved fittings shall be joined by a listed combination of fittings, gaskets, and grooves. [**24:**10.3.5.3]

A.6.3.5.3 Fittings and couplings are listed for specific pipe materials that can be installed underground. Fittings and couplings do not necessarily indicate that they are listed specifically for underground use. [**24:**A.10.3.5.3]

6.3.6 Copper Tube. All joints for the connection of copper tube shall be brazed or joined using pressure fittings as specified in Table 6.2.1.1. [**24:**10.3.6]

6.4 Protection of Private Fire Service Mains.

[**24:**10.4]

6.4.1 Protection from Corrosion. [**24:**10.4.1]

6.4.1.1 Coatings. All bolted joint accessories shall be cleaned and thoroughly coated with asphalt or other corrosion-retarding material after installation. [**24:**10.4.1.1]

Protecting exposed bolts, rods, and glands is critically important for the long-term reliability of the underground piping. Bolts and rods not properly coated for corrosion protection will deteriorate over time, allowing separation of the piping connections. This often results in expensive repairs and, in some cases, damage to the building.

6.4.1.2 The requirements of 6.3.5.3 shall not apply to epoxy-coated fittings, valves, glands, or other accessories. [**24:**10.4.1.2]

6.4.1.3* Where it is necessary to join metal pipe with pipe of dissimilar metal, the joint shall be insulated against the passage of an electric current using an approved method. [**24:**10.4.1.3]

A.6.4.1.3 Gray cast iron is not considered galvanically dissimilar to ductile iron. Rubber gasket joints (unrestrained push-on or mechanical joints) are not considered connected electrically. Metal thickness should not be considered a protection against corrosive environments. In the case of cast iron or ductile iron pipe for soil evaluation and external protection systems, see Appendix A of AWWA C105/A21.5, *Polyethylene Encasement for Ductile-Iron Pipe Systems*. [**24:**A.10.4.1.3]

EDUFIRE.IR

6.4.2* Protection of Piping. [24:10.4.2]

Buried piping must be located below the frost line to prevent freezing during the winter months. The piping must also be buried deep enough to be protected from other surface loads that could exert forces on the piping and cause mechanical damage. This includes such instances as when piping is installed under driveways, roads, railroad tracks, and building footings. This depth might exceed the frost line depth depending on the location.

A.6.4.2 As there is normally no circulation of water in private fire service mains, they require greater depth of covering than do public mains. Greater depth is required in a loose gravelly soil (or in rock) than in compact soil containing large quantities of clay. The recommended depth of cover above the top of underground yard mains is shown in Figure A.6.4.2(a).

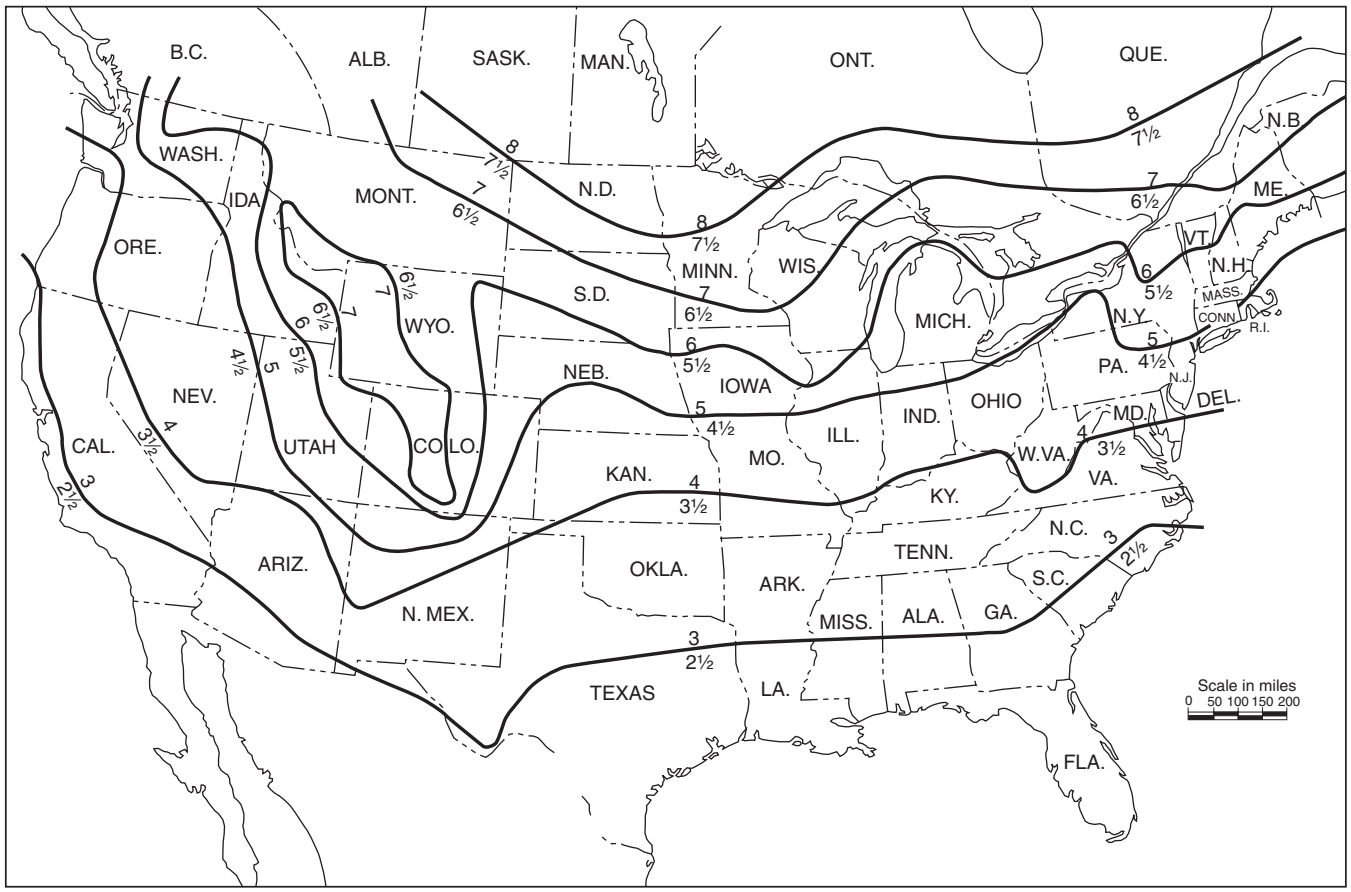

Notes:
1. For SI Units, 1 in. = 25.4 mm; 1 ft = 0.304 m.
2. Where frost penetration is a factor, the depth of cover shown averages 6 in. greater than that usually provided by the municipal waterworks. Greater depth is needed because of the absence of flow in yard mains.

FIGURE A.6.4.2(a) *Recommended Depth of Cover (in feet) Above Top of Underground Yard Mains. [24:Figure A.10.4.2(a)]*

EDUFIRE.IR

In determining the need to protect aboveground piping from freezing, the lowest mean temperature should be considered as shown in Figure A.6.4.2(b). [**24:**A.10.4.2]

6.4.2.1 Protection from Freezing. The depth of cover for private fire service mains and their appurtenances to protect against freezing shall be in accordance with 6.4.2. [**24:**10.4.2.1]

6.4.2.1.1* The top of the pipe shall be buried not less than 1 ft (300 mm) below the frost line for the locality. [**24:**10.4.2.1.1]

A.6.4.2.1.1 Consideration should be given to the type of soil and the possibility of settling. Also, many times the inspection of the piping might occur before final grading and fill of the installation is complete. The final grade should be verified. [**24:**A.10.4.2.1.1]

6.4.2.1.2 The depth of piping shall be measured from the top of the piping to the final grade. [**24:**10.4.2.1.2]

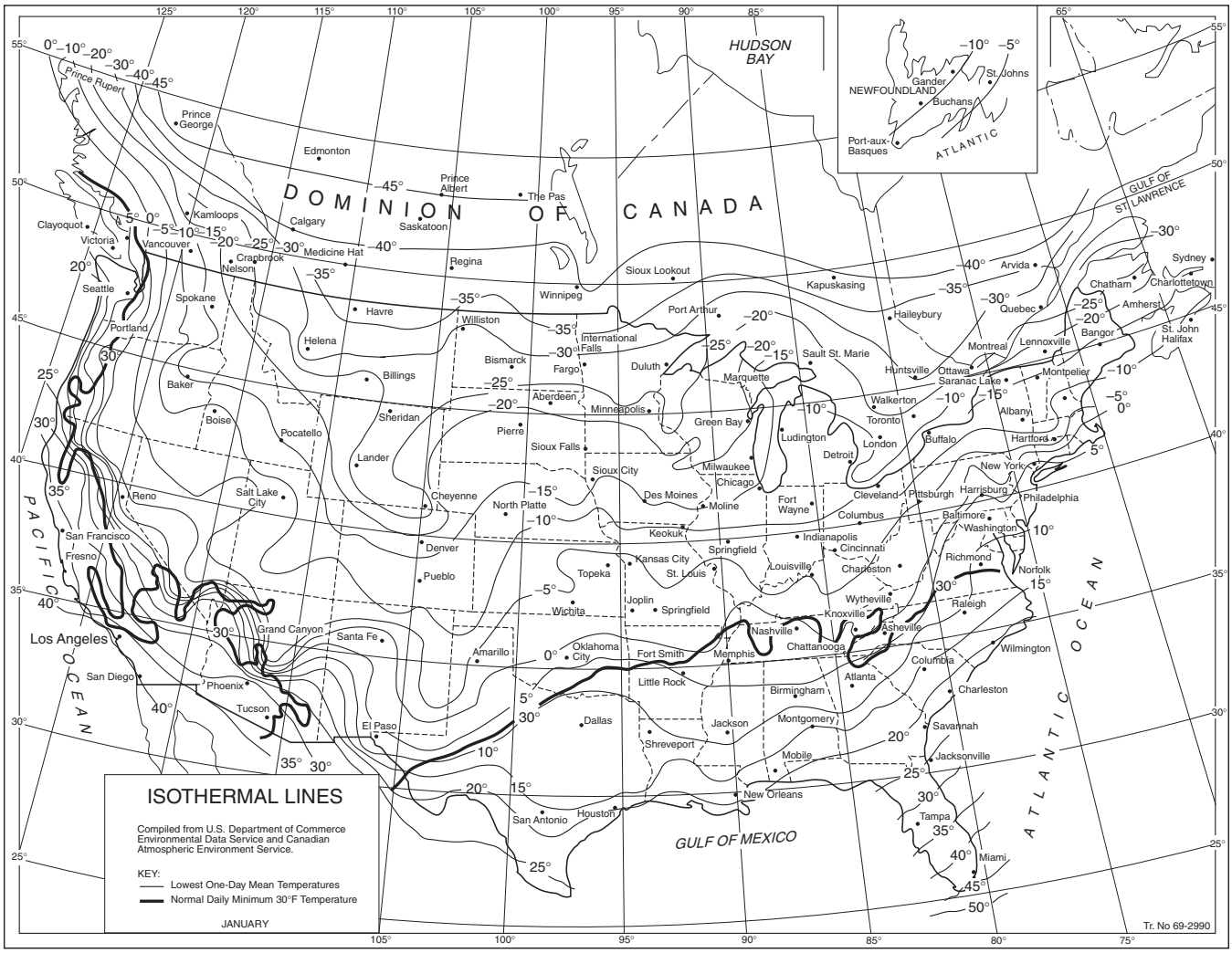

Source: Compiled from United States Weather Bureau records.
For SI units, °C = ⅝ (°F −32); 1 mi = 1.609 km.

FIGURE A.6.4.2(b) *Isothermal Lines — Lowest One-Day Mean Temperature (°F). [24:Figure A.10.4.2(b)]*

EDUFIRE.IR

6.4.2.1.3 Where listed piping is used and the bury depth differs from this standard, the listing limitations shall apply. [**24:**10.4.2.1.3]

6.4.2.1.4 Where private fire service mains are installed above ground, they shall be protected from freezing in accordance with NFPA 13. [**24:**10.4.2.1.4]

6.4.2.1.5 Private fire service mains installed in water raceways or shallow streams shall be installed so that the piping will remain in the running water throughout the year. [**24:**10.4.2.1.5]

6.4.2.1.6 Where piping is installed adjacent to a vertical face, it shall be installed from the vertical face at the same distance as if the piping were buried. [**24:**10.4.2.1.6]

6.4.2.1.7 Protection of private fire service mains from freezing using heat tracing shall be permitted when the heat tracing is specifically listed for underground use. [**24:**10.4.2.1.7]

6.4.2.1.7.1 Heat tracing not listed for underground use shall be permitted when piping is installed in accordance with 6.1.4. [**24:**10.4.2.1.7.1]

6.4.2.2 Protection from Mechanical Damage. The depth of cover for private fire service mains and their appurtenances to protect against mechanical damage shall be in accordance with 6.4.2.2. [**24:**10.4.2.2]

6.4.2.2.1 The depth of piping shall be measured from the top of the piping to the final grade. [**24:**10.4.2.2.1]

6.4.2.2.2 In locations where freezing is not a factor, the depth of cover shall not be less than 30 in. (750 mm) below grade to prevent mechanical damage. [**24:**10.4.2.2.2]

6.4.2.2.2.1 Where listed piping is used and the bury depth differs from this standard, the listing limitations shall apply. [**24:**10.4.2.2.2.1]

6.4.2.2.3 Private fire service mains installed under driveways or roadways shall be buried at a minimum depth of 3 ft (900 mm). [**24:**10.4.2.2.3]

6.4.2.2.3.1 Sidewalks, walkways, and other paved or concrete pedestrian passageways shall not be required to comply with 6.4.2.2.3. [**24:**10.4.2.2.3.1]

6.4.2.2.4 Private fire service mains installed under railroad tracks shall be buried at a minimum depth of 4 ft (1.2 m). [**24:**10.4.2.2.4]

6.4.2.2.4.1 Where railroad operators require a greater depth of bury, the greater depth shall apply. [**24:**10.4.2.2.4.1]

6.4.2.2.5 Private fire service mains installed under large piles of heavy commodities or subject to heavy shock and vibrations shall be buried at a minimum depth of 4 ft (1.2 m). [**24:**10.4.2.2.5]

6.4.2.2.6 Where private fire service mains are installed above ground, they shall be protected with bollards or other means as approved by the AHJ when subject to mechanical damage. [**24:**10.4.2.2.6]

6.4.3 Private Fire Service Mains Under Buildings. Except as allowed by 6.4.3, private fire service mains shall not be allowed to run under buildings. [**24:**10.4.3]

6.4.3.1* Private fire service mains supplying fire protection systems within the building shall be permitted to extend no more than 10 ft (3.0 m), as measured from the outside of the building, under the building to the riser location. [**24:**10.4.3.1]

The requirement in 6.4.3.1 permits a riser lead-in main to run underneath the building's footing or to penetrate the foundation wall if the main rises through the floor slab within 10 ft (3 m) of the building's exterior wall.

EDUFIRE.IR

DESIGNER'S CORNER [6.4.3]

Is it okay to run pipe under a building?

NFPA 13 and NFPA 24 discourage the installation of pipe under buildings. While 6.4.3 does provide a way to run the pipe under the building, doing so should be the last resort. This answer is not referring to a small portion of pipe that goes under only a small section of the building for 12–24 in. (300–600 mm) before turning up into a riser — that situation is expected. The concern is for pipe that completely passes under a building or runs under a building for a long distance before emerging.

The problem is that if the pipe breaks or develops a leak, it can be extremely difficult to repair if it runs under the building. Water discharging from the pipe can undermine the building's foundation and cause significant damage to the building. Every joint in a run of piping under a building has the potential to release water, so the longer the run of pipe under the building, the more of a concern it will be.

If pipe must be run under a building, the requirements in 6.4.3 provide guidance in how to best address that scenario. Running the pipe in a covered trench helps to provide access to the pipe if a problem develops after the building is finished. The trench should be accessible from the basement or lowest floor of the building.

Putting control valves on either end of the portion of the pipe running under the building allows the piping under the building to be isolated if a problem develops. In the worst case, the piping under the building can be abandoned. Replacement pipe can then be connected around the building by shutting the control valves to allow work on the pipe to be performed without it being pressurized. The control valves are typically post-indicator valves (PIVs) because they are the easiest to connect to underground piping outside and away from the building.

The following illustration shows a plan view of a building where the suction pipe for the fire pump runs under the building to a pump room in the basement. Because of the building's placement and use, this is the only spot where the pump could be located. The pipe is run in a trench and has control valves at both ends — one outside the building (PIV1) and the other in the piping in the pump room (OSY2). If a problem occurs under the building, the control valves can be closed, the piping in the trench can be accessed, and the pipe can be repaired without having to drain a significant portion of piping or tear up the building.

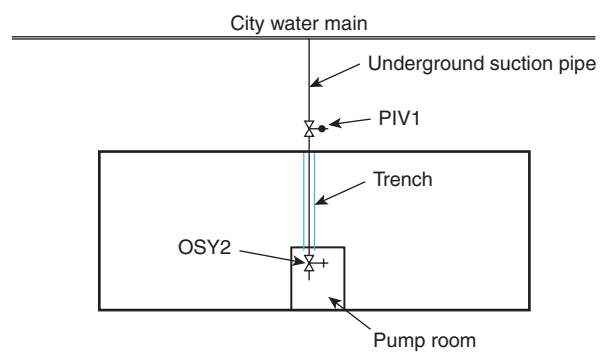

Suction Piping Under Building.

A.6.4.3.1 Items such as sidewalks or patios should not be included as they are not different from roadways. See Figure A.6.4.3.1. [**24:**A.10.4.3.1]

6.4.3.1.1* Pipe joints shall not be located directly under foundation footings. [**24:**10.4.3.1.1]

A.6.4.3.1.1 The individual piping standards should be followed for load and bury depth, accounting for the load and stresses imposed by the building foundation.

Figure A.6.4.3.1.1 shows location where pipe joints would be prohibited. [**24:**A.10.4.3.1.1]

6.4.3.1.2* Piping shall be installed a minimum of 12 in. (300 mm) below the bottom of building foundations or footers. [**24:**10.4.3.1.2]

A.6.4.3.1.2 Sufficient clearance should be provided when piping passes beneath foundations or footers. See Figure A.6.4.3.1.2. [**24:**A.10.4.3.1.2]

6.4.3.1.2.1 The requirements of 6.4.3.1.2 shall not apply when the piping is sleeved with an approved material. [**24:**10.4.3.1.2.1]

When buildings are built over existing underground piping, the piping should be rerouted around the new building for several reasons. Piping located under buildings is extremely difficult to repair, which is one of the reasons that 6.4.3 limits the installation of pipe under buildings. When piping under buildings requires repair, operations in the building must be curtailed, equipment might need to be moved, and the floor must be excavated. Leaks in the buried piping underneath the building can go undetected for long

EDUFIRE.IR

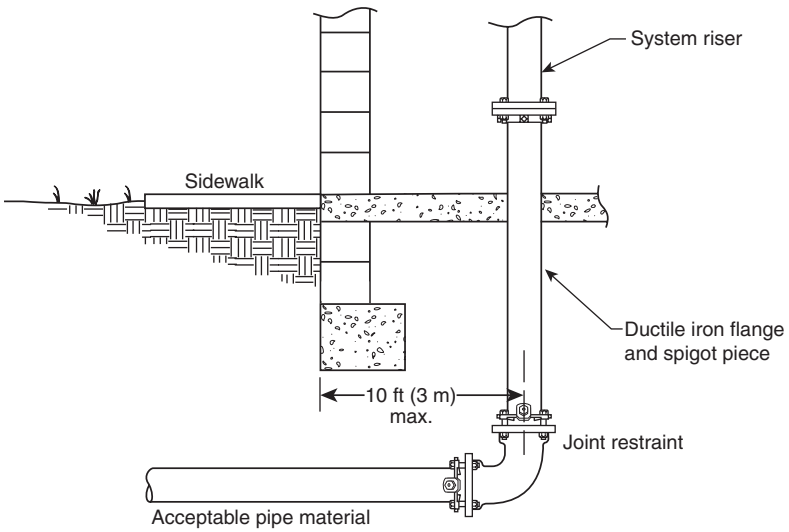

FIGURE A.6.4.3.1 *Riser Entrance Location. [24:Figure A.10.4.3.1]*

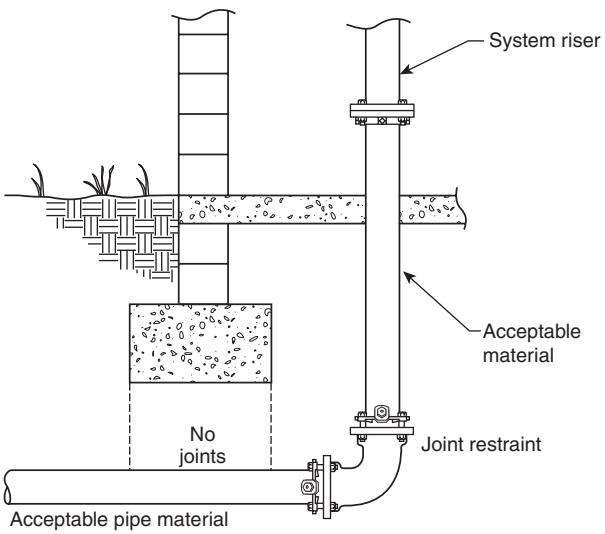

FIGURE A.6.4.3.1.1 *Pipe Joint Location in Relation to Foundation Footings. [24:Figure A.10.4.3.1.1]*

periods, water can surface inside and damage building contents, and leaks can undermine the building support. The location of system control valves in the center of a building would be highly undesirable during a fire event. Where the installation of piping under a building is approved by the authority having jurisdiction, 6.4.3.2 provides limitations on the length the pipe is permitted to be extended into the building and requirements for the installation that will limit the potential for a pipe break.

6.4.3.2* Private fire service mains shall not be permitted to extend more than 10 ft (3 m) under the building except as allowed in 6.4.3.2.1. [**24:**10.4.3.2]

While locating risers adjacent to exterior walls is not practical, 6.4.3.2 nevertheless requires pipe runs to meet specific requirements to protect the piping from damage, limit the potential for a pipe break, provide accessibility, and provide a means of isolating the piping.

EDUFIRE.IR

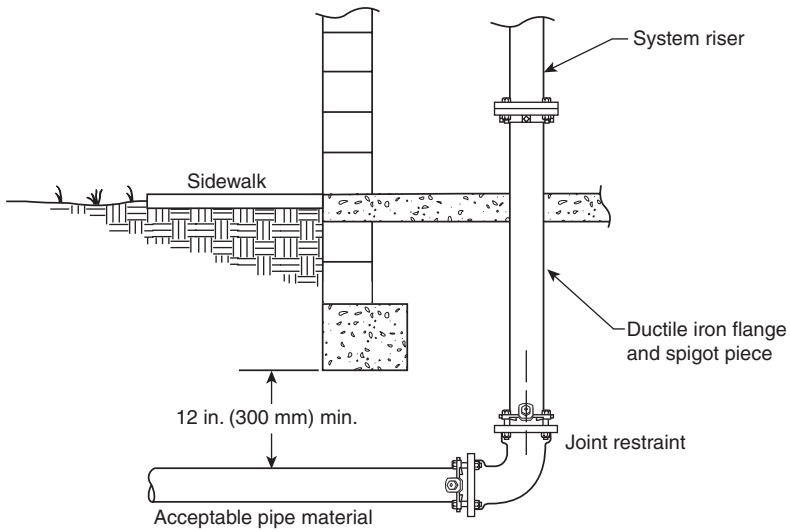

FIGURE A.6.4.3.1.2 *Piping Clearance from Foundation. [24:Figure A.10.4.3.1.2]*

A.6.4.3.2 The design concepts in 6.4.3.2.1 through 6.4.3.2.1.3 should apply to both new installations and existing private fire service mains approved to remain under new buildings. [**24:**A.10.4.3.2]

N **6.4.3.2.1** Where private fire service mains extend more than 10 ft (3 m) into the building, they shall be run in a covered trench. [**24:**10.4.3.2.1]

N **6.4.3.2.1.1*** The trench shall be accessible from within the building. [**24:**10.4.3.2.1.1]

N **A.6.4.3.2.1.1** A grate or steel plate are common methods of accessing the trench. [**24:**A.10.4.3.2.1.1]

6.4.3.2.1.2 The trench shall have rigid walls and a base. [**24:**10.4.3.2.1.2]

N **6.4.3.2.1.3** The trench shall be constructed of noncombustible materials. [**24:**10.4.3.2.1.3]

N **6.4.3.2.1.4*** Provisions for draining water shall be provided for the trench. [**24:**10.4.3.2.1.4]

N **A.6.4.3.2.1.4** The intent of this requirement is to prevent the piping from being exposed to standing water. Draining can be accomplished by providing a floor drain, sloping the trench, or other approved method. [**24:**A.10.4.3.2.1.4]

N **6.4.3.2.1.5** Where the piping in the trench is installed under foundations or footers, clearance shall be provided in accordance with 6.4.3.1.2 or 6.4.3.1.2.1. [**24:**10.4.3.2.1.5]

N **6.4.3.2.2** Piping in the trench shall be permitted to be in accordance with 6.1.1. [**24:**10.4.3.2.2]

N **6.4.3.2.2.1** Aboveground piping in accordance with NFPA 13 shall be permitted to be used. [**24:**10.4.3.2.2.1]

N **6.4.3.2.2.2** Where piping installed in the trench is in accordance with 6.1.1, all joints shall be restrained in accordance with 6.6.2 or 6.6.3. [**24:**10.4.3.2.2.2]

N **6.4.3.2.3*** Where piping is installed in a trench as permitted by 6.4.3.2.1, a valve shall be provided where the underground piping enters the trench. [**24:**10.4.3.2.3]

N **A.6.4.3.2.3** It is the intent of this section to require a valve at each point where the pipe enters the trench when the trench traverses the entire building. Generally, if the piping terminates at a point within the building, a valve is usually provided at a riser, allowing the isolation of the pipe section in the trench. [**24:**A.10.4.3.2.3]

N **6.4.3.2.4** When piping is installed in a trench, bury depths of 6.4.2.2 shall not apply. [**24:**10.4.3.2.4]

EDUFIRE.IR

N **6.4.3.2.4.1** Piping in the trench shall be protected from freezing in accordance with 6.4.2.1.4. [**24:**10.4.3.2.4.1]

6.5 Grounding and Bonding.

[**24:**10.5]

6.5.1* In no case shall the underground piping be used as a grounding electrode for electrical systems. [**24:**10.5.1]

A.6.5.1 Where lightning protection is provided for a structure, Section 4.14 of NFPA 780 requires that all grounding media, including underground metallic piping systems, be interconnected to provide common ground potential. These underground piping systems are not permitted to be substituted for grounding electrodes but must be bonded to the lightning protection grounding system. Where galvanic corrosion is of concern, this bond can be made via a spark gap or gas discharge tube. [**24:**A.10.5.1]

ASK THE AHJ

How can it be determined that the underground service is being used as a grounding electrode?

If there is a large diameter copper cable running from the electrical service panel that is attached to the sprinkler system's service main as it enters the building, it is a telltale sign that the underground service is being used as a grounding electrode. If a larger diameter copper cable is attached to the fire service main as it enters the building, the electrical inspector will need to examine it to make sure the sprinkler system's service main is not being used as a grounding electrode.

FAQ [6.5.1]

Why does the requirement of 6.5.1 prohibit the use of underground piping for grounding of electrical services?

The use of underground fire protection piping for electrical grounding increases the potential for stray ground currents and increased galvanic corrosion, which is why such use is prohibited by 6.5.1. Grounding to piping systems that could have nonconductive piping or joints (such as PVC piping) is especially dangerous, since it might not provide the expected ground. In no case should the underground piping be used as a grounding electrode for electrical systems. Electrical equipment should be grounded in accordance with *NFPA 70*®, National Electrical Code®.

6.5.1.1* The requirement of 6.5.1 shall not preclude the bonding of the underground piping to the lightning protection grounding system as required by NFPA 780 in those cases where lightning protection is provided for the structure. [**24:**10.5.1.1]

A.6.5.1.1 While the use of the underground fire protection piping as the grounding electrode for the building is prohibited, *NFPA 70* requires that all metallic piping systems be bonded and grounded to disperse stray electrical currents. Therefore, the fire protection piping will be bonded to other metallic systems and grounded, but the electrical system will need an additional ground for its operation. [**24:**A.10.5.1.1]

6.6* Restraint.

Private fire service mains shall be restrained against movement at changes in direction in accordance with 6.6.1, 6.6.2, or 6.6.3. [**24:**10.6]

Section 6.6 addresses the need to restrain pipe movement caused by hydraulic pressure or dynamic thrust forces created by water changing direction as it flows through the pipe. The pipe is restrained by specific joining methods or by the use of mechanical fasteners or other approved methods. Restraint in unrestrained pipe joints is typically provided by thrust blocks, which are provided at piping direction changes (i.e., elbows, bends, and tee fittings) to prevent unrestrained pipe joints from separating and to prevent pipe movement in soft soil.

A.6.6 It is a fundamental design principle of fluid mechanics that dynamic and static pressures, acting at changes in size or direction of a pipe, produce unbalanced thrust forces at locations such as bends, tees, wyes, dead ends, and reducer offsets. This design principle includes consideration of lateral soil pressure and pipe/soil friction, variables that can be

EDUFIRE.IR

reliably determined using current soil engineering knowledge. Refer to A.6.6.2 for a list of references for use in calculating and determining joint restraint systems.

Section 6.6 does not mandate which method of restraint should be used. This decision is left to the design professional or the owner.

Except for the case of welded joints and approved special restrained joints, such as is provided by approved mechanical joint retainer glands or locked mechanical and push-on joints, the usual joints for underground pipe are expected to be held in place by the soil in which the pipe is buried. Gasketed push-on and mechanical joints without special locking devices have limited ability to resist separation due to movement of the pipe. [**24:**A.10.6]

6.6.1* Thrust Blocks.

A.6.6.1 The use of concrete thrust blocks is one method of restraint, provided that stable soil conditions prevail and space requirements permit placement. Successful blocking is dependent on factors such as location, availability and placement of concrete, and possibility of disturbance by future excavations.

Resistance is provided by transferring the thrust force to the soil through the larger bearing area of the block so that the resultant pressure against the soil does not exceed the horizontal bearing strength of the soil. The design of thrust blocks consists of determining the appropriate bearing area of the block for a particular set of conditions. The parameters involved in the design include pipe size, design pressure, angle of the bend (or configuration of the fitting involved), and the horizontal bearing strength of the soil.

Table A.6.6.1(a) gives the nominal thrust at fittings for various sizes of ductile-iron and PVC piping. Figure A.6.6.1(a) shows an example of how thrust forces act on a piping bend.

Thrust blocks are generally categorized into two groups — bearing and gravity blocks. Figure A.6.6.1(b) depicts a typical bearing thrust block on a horizontal bend. [**24:**A.10.6.1]

TABLE A.6.6.1(a) *Thrust at Fittings at 100 psi (6.9 bar) Water Pressure for Ductile Iron and PVC Pipe*

Nominal Pipe Diameter [in. (mm)]	*Total Pounds (Newtons)*											
	Dead End		*90 Degree*		*45 Degree*		*22½ Degree*		*11¼ Degree*		*5⅛ Degree*	
	lbf	*N*	*lbf*	*N*	*lbf*	*N*	*lbf*	*N*	*lbf*	*N*	*lbf*	*N*
4 (100)	1,810	8,051	2,559	11,383	1,385	6,161	706	3,140	355	1,579	162	721
6 (150)	3,739	16,632	5,288	23,522	2,862	12,731	1,459	6,490	733	3,261	334	1,486
8 (200)	6,433	28,615	9,097	40,465	4,923	21,899	2,510	11,165	1,261	5,609	575	2,558
10 (250)	9,677	43,045	13,685	60,874	7,406	32,944	3,776	16,796	1,897	8,438	865	3,848
12 (300)	13,685	60,874	19,353	86,086	10,474	46,591	5,340	23,753	2,683	11,935	1,224	5,445
14 (350)	18,385	81,781	26,001	115,658	14,072	62,595	7,174	31,912	3,604	16,031	1,644	7,313
16 (400)	23,779	105,774	33,628	149,585	18,199	80,953	9,278	41,271	4,661	20,733	2,126	9,457
18 (450)	29,865	132,846	42,235	187,871	22,858	101,677	11,653	51,835	5,855	26,044	2,670	11,877
20 (500)	36,644	163,001	51,822	230,516	28,046	124,755	14,298	63,601	7,183	31,952	3,277	14,577
24 (600)	52,279	232,548	73,934	328,875	40,013	177,987	20,398	90,735	10,249	45,590	4,675	20,795
30 (750)	80,425	357,748	113,738	505,932	61,554	273,806	31,380	139,585	15,766	70,131	7,191	31,987
36 (900)	115,209	512,475	162,931	724,753	88,177	392,231	44,952	199,956	22,585	100,463	10,302	45,826
42 (1,050)	155,528	691,823	219,950	978,386	119,036	529,498	60,684	269,936	30,489	135,622	13,907	61,861
48 (1,200)	202,683	901,579	286,637	1,275,024	155,127	690,039	79,083	351,779	39,733	176,741	18,124	80,620

Notes:

(1) For SI units, 1 lb = 0.454 kg; 1 in. = 25 mm.

(2) To determine thrust at pressure other than 100 psi (6.9 bar), multiply the thrust obtained in the table by the ratio of the pressure to 100 psi (6.9 bar). For example, the thrust on a 12 in. (305 mm), 90-degree bend at 125 psi (8.6 bar) is 19,353 × 125/100 = 24,191 lb (10,973 kg).

EDUFIRE.IR

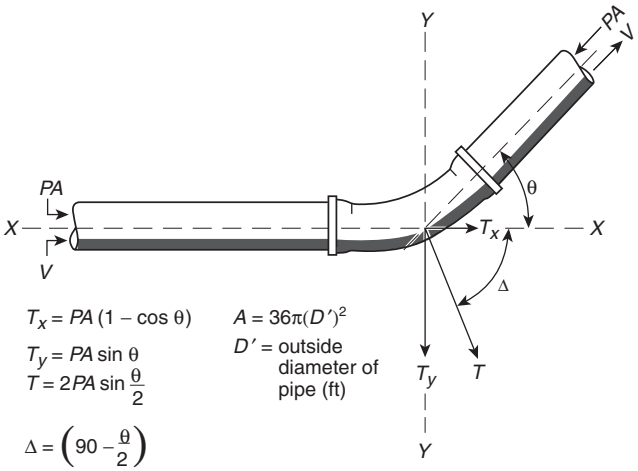

$T_x = PA\,(1 - \cos\theta)$

$T_y = PA \sin\theta$

$T = 2PA \sin\frac{\theta}{2}$

$\Delta = \left(90 - \frac{\theta}{2}\right)$

$A = 36\pi(D')^2$

D' = outside diameter of pipe (ft)

T = thrust force resulting from change in direction of flow (lbf)
T_x = component of thrust force acting parallel to original direction of flow (lbf)
T_y = component of thrust force acting perpendicular to original direction of flow (lbf)
P = water pressure (psi^2)
A = cross-sectional area of pipe based on outside diameter (in.^{2})
V = velocity in direction of flow

FIGURE A.6.6.1(a) *Thrust Forces Acting on Bend. [24:Figure A.10.6.1(a)]*

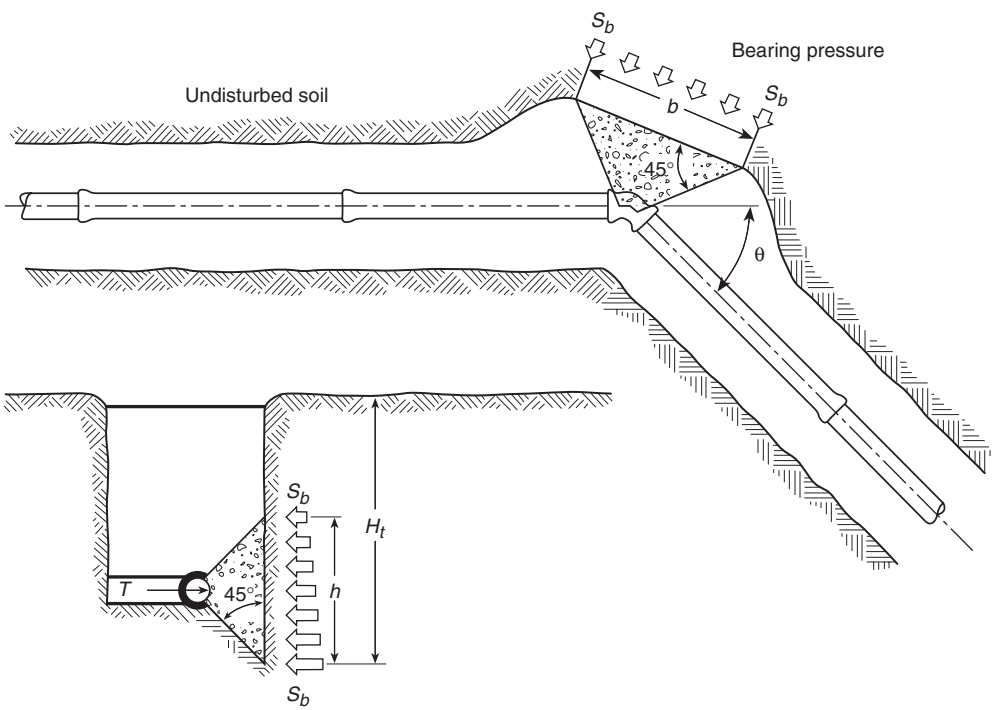

T = thrust force resulting from change in direction of flow
S_b = horizontal bearing strength of soil
h = block height
H_t = total depth to bottom of block

FIGURE A.6.6.1(b) *Bearing Thrust Block. [24:Figure A.10.6.1(b)]*

EDUFIRE.IR

The following are general criteria for bearing block design:

(1) The bearing surface should, where possible, be placed against undisturbed soil.
(2) Where it is not possible to place the bearing surface against undisturbed soil, the fill between the bearing surface and undisturbed soil must be compacted to at least 90 percent Standard Proctor density.
(3) Block height *(h)* should be equal to or less than one-half the total depth to the bottom of the block *(H_t)* but not less than the pipe diameter *(D)*.
(4) Block height *(h)* should be chosen such that the calculated block width *(b)* varies between one and two times the height.
(5) Gravity thrust blocks can be used to resist thrust at vertical down bends. In a gravity thrust block, the weight of the block is the force providing equilibrium with the thrust force. The design problem is then to calculate the required volume of the thrust block of a known density. The vertical component of the thrust force in Figure A.6.6.1(c) is balanced by the weight of the block. For required horizontal bearing block areas, see Table A.6.6.1(b).

TABLE A.6.6.1(b) *Required Horizontal Bearing Block Area*

Nominal Pipe Diameter [in. (mm)]	*Bearing Block Area [ft² (m²)]*	*Nominal Pipe Diameter [in. (mm)]*	*Bearing Block Area [ft² (m²)]*	*Nominal Pipe Diameter [in. (mm)]*	*Bearing Block Area [ft² (m²)]*
3 (80)	2.6 (0.24)	12 (300)	29.0 (2.7)	24 (600)	110.9 (10.3)
4 (100)	3.8 (0.35)	14 (350)	39.0 (3.6)	30 (750)	170.6 (15.8)
6 (150)	7.9 (0.73)	16 (400)	50.4 (4.7)	36 (900)	244.4 (22.7)
8 (200)	13.6 (1.3)	18 (450)	63.3 (5.9)	42 (1050)	329.9 (30.6)
10 (250)	20.5 (2)	20 (500)	77.7 (7.2)	48 (1200)	430.0 (39.9)

Notes:

(1) Although the bearing strength values in this table have been used successfully in the design of thrust blocks and are considered to be conservative, their accuracy is totally dependent on accurate soil identification and evaluation. The ultimate responsibility for selecting the proper bearing strength of a particular soil type must rest with the design engineer.

(2) Values listed are based on a 90-degree horizontal bend, an internal pressure of 100 psi (6.9 bar), a soil horizontal bearing strength of 1000 lb/ft ² (47.9 kN/m²), a safety factor of 1.5, and ductile iron pipe outside diameters.

(a) For other horizontal bends, multiply by the following coefficients: for 45 degrees, 0.541; for 22½ degrees, 0.276; for 11¼ degrees, 0.139.
(b) For other internal pressures, multiply by ratio to 100 psi (69 bar).
(c) For other soil horizontal bearing strengths, divide by ratio to 1000 lb/ft² (47.9 kN/m²).
(d) For other safety factors, multiply by ratio to 1.5.

Example: Using Table A.6.6.1(b), find the horizontal bearing block area for a 6 in. (150 mm) diameter, 45-degree bend with an internal pressure of 150 psi (10 bar). The soil bearing strength is 3000 lb/ft² (145 kN/m²), and the safety factor is 1.5.

From Table A.6.6.1(b), the required bearing block area for a 6 in. (150 mm) diameter, 90-degree bend with an internal pressure of 100 psi (6.9 bar) and a soil horizontal bearing strength of 1000 psi (70 bar) is 7.9 ft² (0.73 m²).

For example:

$$Area = \frac{7.9\,\text{ft}^2(0.541)\dfrac{150}{100}}{\dfrac{3000}{1000}} = 2.1\,\text{ft}^2 \qquad \textbf{[A.6.6.1e]}$$

EDUFIRE.IR

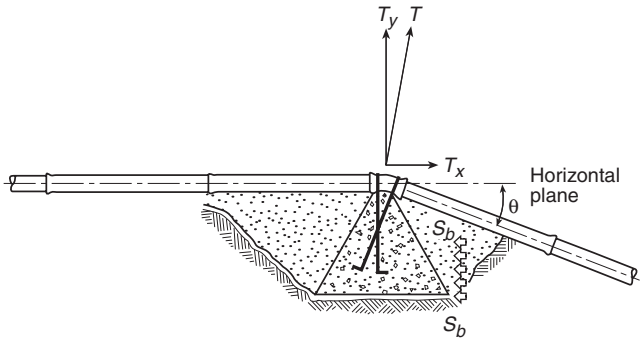

T = thrust force resulting from change of direction of flow
T_x = horizontal component of thrust force
T_y = vertical component of thrust force
S_b = horizontal bearing strength of soil

FIGURE A.6.6.1(c) *Gravity Thrust Block.*
[24:Figure A.10.6.1(c)]

The required block area (A_b) is as follows:

$$A_b = (h)(b) = \frac{T\left(S_f\right)}{S_b} \qquad \textbf{[A.6.6.1b]}$$

where:

A_b = required block area (ft^2)
h = block height (ft)
b = calculated block width (ft)
T = thrust force (lbf)
S_f = safety factor (usually 1.5)
S_b = bearing strength (lb/ft^2)

Then, for a horizontal bend, the following formula is used:

$$b = \frac{2(S_f)(P)(A)\sin\frac{\theta}{2}}{(h)(S_b)} \qquad \textbf{[A.6.6.1c]}$$

where:

b = calculated block width (ft)
S_f = safety factor (usually 1.5 for thrust block design)
P = water pressure (lb/in.^{2})
A = cross-sectional area of the pipe based on outside diameter
h = block height (ft)
S_b = horizontal bearing strength of soil (lb/ft^2) (in.^{2})

A similar approach can be used to design bearing blocks to resist the thrust forces at locations such as tees and dead ends. Typical values for conservative horizontal bearing strengths of various soil types are listed in Table A.6.6.1(c). [**24:**A.10.6.1]

EDUFIRE.IR

TABLE A.6.6.1(c) *Horizontal Bearing Strengths*

	Bearing Strength, S_b	
Soil	***lb/ft²***	***kN/m²***
Muck	0	0
Soft clay	1000	47.9
Silt	1500	71.8
Sandy silt	3000	143.6
Sand	4000	191.5
Sandy clay	6000	287.3
Hard clay	9000	430.9

Note: Although the bearing strength values in this table have been used successfully in the design of thrust blocks and are considered to be conservative, their accuracy is totally dependent on accurate soil identification and evaluation. The ultimate responsibility for selecting the proper bearing strength of a particular soil type must rest with the design engineer.

[**24:**Table A.10.6.1(c)]

In lieu of the values for soil bearing strength shown in Table A.6.6.1(c), a designer might choose to use calculated Rankine passive pressure (P_p) or other determination of soil-bearing strength based on actual soil properties.

It can be easily shown that $T_y = PA \sin \theta$. The required volume of the block is as follows:

$$V_s = \frac{S_f PA \sin \theta}{W_m} \qquad \textbf{[A.6.6.1d]}$$

where:

V_g = block volume (ft³)
S_f = safety factor
P = water pressure (psi)
A = cross-sectional area of pipe interior
W_m = density of block material (lb/ft³)

In a case such as the one shown, the horizontal component of thrust force is calculated as follows:

$$T_x = PA(1 - \cos \theta) \qquad \textbf{[A.6.6.1e]}$$

where:

T_x = horizontal component of thrust force
P = water pressure (psi)
A = cross-sectional area of pipe interior

The horizontal component of thrust force must be resisted by the bearing of the right side of the block against the soil. Analysis of this aspect follows the same principles as the previous section on bearing blocks. [**24:**A.10.6.1]

The soil bearing strength value to be used for sizing thrust blocks is the horizontal bearing strength, which is shown in Table A.6.6.1(b). Vertical bearing strength values are often determined for purposes of structural support but are not necessarily the same.

EDUFIRE.IR

Table A.6.6.1(c) provides a simplified approach to calculating the required bearing area. The tabular areas are based on the simple conditions indicated in the footnote, and ratios can simply be applied for conditions other than 90-degree bends, 100 psi (6.9 bar) maximum pressure, and soil horizontal bearing strength of 1000 lbs/ft^2 (48kN/m^2) as indicated in the example.

6.6.1.1 Thrust blocks shall be permitted where soil is stable and capable of resisting the anticipated thrust forces. [**24:**10.6.1.1]

6.6.1.2 Thrust blocks shall be concrete of a mix not leaner than one part cement, two and one-half parts sand, and five parts stone. [**24:**10.6.1.2]

6.6.1.3 Thrust blocks shall be placed between undisturbed earth and the fitting to be restrained and shall be capable of resisting the calculated thrust forces. [**24:**10.6.1.3]

6.6.1.4 Wherever possible, thrust blocks shall be located so that the joints are accessible for repair. [**24:**10.6.1.4]

Exhibit 6.2 illustrates a typical thrust block arrangement.

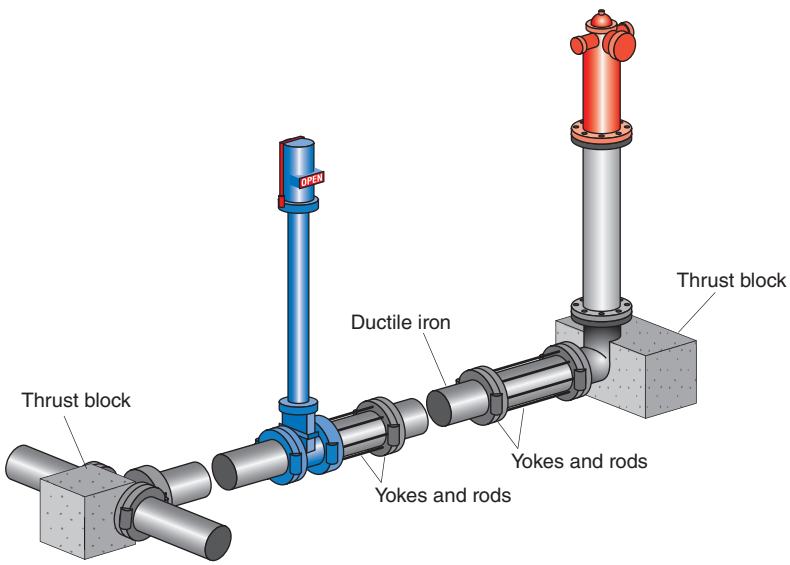

EXHIBIT 6.2 *Typical Thrust Block Arrangement. (Courtesy of Stephan Laforest)*

6.6.2* Restrained Joint Systems. Private fire service mains using restrained joint systems shall include one or more of the following:

(1) Locking mechanical or push-on joints
(2) Mechanical joints utilizing setscrew retainer glands
(3) Bolted flange joints
(4) Pipe clamps and tie rods
(5) Other approved methods or devices

[**24:**10.6.2]

Any one of the restraining systems listed in 6.6.2 is considered acceptable. Flange adapter fittings and other mechanical joints do not necessarily provide joint restraint. For example, flange adapter fittings are listed by Underwriters Laboratories as "fittings, retainer type" in UL 194, *Gasketed Joints for Ductile-Iron Pipe and Fittings for Fire Protection Service*. UL 194 further categorizes such fittings as either "gasketed joints with self-restraining feature" or "gasketed joints without self-restraining feature." The latter includes gasketed

EDUFIRE.IR

joints consisting of merely a pipe or fitting bell and a spigot end without a feature for joint restraint. Under the provisions of UL 194, all gasketed joints are provided with a pressure test at twice the rated working pressure, with their joints deflected to the maximum angle specified by the manufacturer. Joints for which the manufacturer claims a self-restraining feature are not provided with external restraint during the test. The manufacturer's literature should specify whether external restraint is required. An example of a restrained coupling is shown in Exhibit 6.3. Rods and clamps can be used as an alternative to the restrained joint system shown in Figure A.6.6.2.

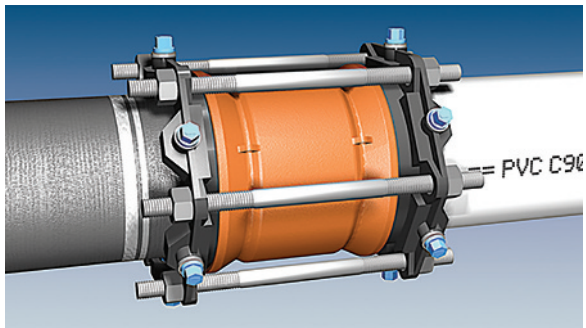

EXHIBIT 6.3 *Example of Restrained Coupling. (Courtesy of EBAA Iron, Inc.)*

A.6.6.2 A method for providing thrust restraint is the use of restrained joints. A restrained joint is a special type of joint that is designed to provide longitudinal restraint. Restrained joint systems function in a manner similar to thrust blocks, insofar as the reaction of the entire restrained unit of piping with the soil balances the thrust forces.

The objective in designing a restrained joint thrust restraint system is to determine the length of pipe that must be restrained on each side of the focus of the thrust force, which occurs at a change in direction. This will be a function of the pipe size, the internal pressure, the depth of cover, and the characteristics of the solid surrounding the pipe. The manufacturer's installation instructions should be referenced to determine the distance from each change in direction that joints should be restrained.

The following documents apply to the design, calculation, and determination of restrained joint systems:

(1) *Thrust Restraint Design for Ductile-Iron Pipe*, Ductile-Iron Pipe Research Association
(2) AWWA M41, *Ductile-Iron Pipe and Fittings*
(3) AWWA M9, *Concrete Pressure Pipe*
(4) AWWA M11, *Steel Pipe — A Guide for Design and Installation*
(5) *Thrust Restraint Design Equations and Tables for Ductile-Iron and PVC Pipe*, EBAA Iron, Inc.

Figure A.6.6.2 shows an example of a typical connection to a fire protection system riser utilizing restrained joint pipe. [**24:**A.10.6.2]

6.6.2.1 Sizing Clamps, Rods, Bolts, and Washers. [**24:**10.6.2.1]

6.6.2.1.1 Clamps. [**24:**10.6.2.1.1]

6.6.2.1.1.1 Clamps shall have the following dimensions:

(1) ½ in. × 2 in. (13 mm × 50 mm) for 4 in. (100 mm) to 6 in. (150 mm) pipe
(2) ⅝ in. × 2½ in. (16 mm × 65 mm) for 8 in. (200 mm) to 10 in. (250 mm) pipe
(3) ⅝ in. × 3 in. (16 mm × 75 mm) for 12 in. (300 mm) pipe

[**24:**10.6.2.1.1.1]

EDUFIRE.IR

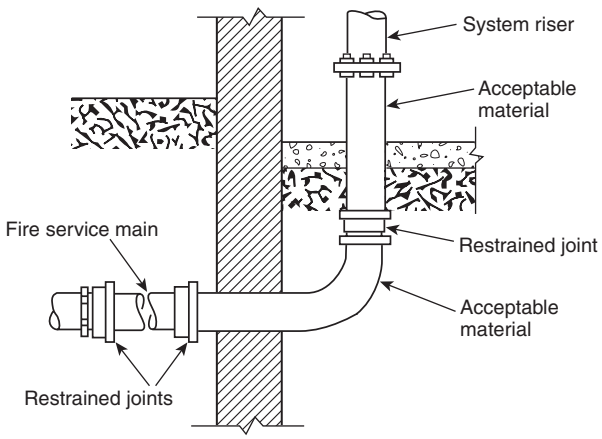

FIGURE A.6.6.2 *Typical Connection to a Fire Protection System Riser Illustrating Restrained Joints. [24:Figure A.10.6.2]*

6.6.2.1.1.2 The diameter of a bolt hole shall be ⅛ in. (3.2 mm) larger than that of the corresponding bolt. [**24:**10.6.2.1.1.2]

6.6.2.1.2 Rods. [**24:**10.6.2.1.2]

6.6.2.1.2.1 Rods shall be not less than ⅝ in. (16 mm) in diameter. [**24:**10.6.2.1.2.1]

6.6.2.1.2.2 Table 6.6.2.1.2.2 provides the numbers of various diameter rods that shall be used for a given pipe size. [**24:**10.6.2.1.2.2]

TABLE 6.6.2.1.2.2 *Rod Number — Diameter Combinations*

Nominal Pipe Size in. (mm)	*⅝ in. (16 mm)*	*¾ in. (20 mm)*	*⅞ in. (22 mm)*	*1 in. (25 mm)*
4 (100)	2	—	—	—
6 (150)	2	—	—	—
8 (200)	3	2	—	—
10 (250)	4	3	2	—
12 (300)	6	4	3	2
14 (350)	8	5	4	3
16 (400)	10	7	5	4

Note: This table has been derived using pressure of 225 psi (15.5 bar) and design stress of 25,000 psi (172.4 MPa). [**24:**Table 10.6.2.1.2.2]

6.6.2.1.2.3 When using bolting rods, the diameter of mechanical joint bolts shall limit the diameter of rods to ¾ in. (20 mm). [**24:**10.6.2.1.2.3]

6.6.2.1.2.4 Threaded sections of rods shall not be formed or bent. [**24:**10.6.2.1.2.4]

6.6.2.1.2.5 Where using clamps, rods shall be used in pairs for each clamp. [**24:**10.6.2.1.2.5]

6.6.2.1.2.6 Assemblies in which a restraint is made by means of two clamps canted on the barrel of the pipe shall be permitted to use one rod per clamp if approved for the specific installation by the AHJ. [**24:**10.6.2.1.2.6]

EDUFIRE.IR

6.6.2.1.2.7 Where using combinations of rods, the rods shall be symmetrically spaced. [**24:**10.6.2.1.2.7]

6.6.2.1.3 Clamp Bolts. Clamp bolts shall have the following diameters:

(1) ⅝ in. (16 mm) for pipe 4 in. (100 mm), 6 in. (150 mm), and 8 in. (200 mm)
(2) ¾ in. (20 mm) for 10 in. (250 mm) pipe
(3) ⅞ in. (22 mm) for 12 in. (300 mm) pipe

[**24:**10.6.2.1.3]

6.6.2.1.4 Washers. [**24:**10.6.2.1.4]

6.6.2.1.4.1 Washers shall be permitted to be cast iron or steel and round or square. [**24:**10.6.2.1.4.1]

6.6.2.1.4.2 Cast-iron washers shall have the following dimensions:

(1) ⅝ in. × 3 in. (16 mm × 75 mm) for 4 in. (100 mm), 6 in. (150 mm), 8 in. (200 mm), and 10 in. (250 mm) pipe
(2) ¾ in. × 3½ in. (20 mm × 90 mm) for 12 in. (300 mm) pipe

[**24:**10.6.2.1.4.2]

6.6.2.1.4.3 Steel washers shall have the following dimensions:

(1) ½ in. × 3 in. (12 mm × 75 mm) for 4 in. (100 mm), 6 in. (150 mm), 8 in. (200 mm), and 10 in. (250 mm) pipe
(2) ½ in. × 3½ in. (12 mm × 90 mm) for 12 in. (300 mm) pipe

[**24:**10.6.2.1.4.3]

6.6.2.1.4.4 The diameter of holes shall be ⅛ in. (3 mm) larger than that of bolts or rods. [**24:**10.6.2.1.4.4]

6.6.2.2 Sizes of Restraint Straps for Tees. [**24:**10.6.2.2]

6.6.2.2.1 Restraint straps for tees shall have the following dimensions:

(1) ⅝ in. (16 mm) thick and 2½ in. (65 mm) wide for 4 in. (100 mm), 6 in. (150 mm), 8 in. (200 mm), and 10 in. (250 mm) pipe
(2) ⅝ in. (16 mm) thick and 3 in. (75 mm) wide for 12 in. (300 mm) pipe

[**24:**10.6.2.2.1]

6.6.2.2.2 The diameter of rod holes shall be 1/16 in. (1.6 mm) larger than that of rods. [**24:**10.6.2.2.2]

6.6.2.2.3 Figure 6.6.2.2.3 and Table 6.6.2.2.3 shall be used in sizing the restraint straps for both mechanical and push-on joint tee fittings. [**24:**10.6.2.2.3]

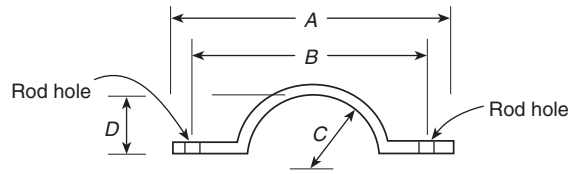

FIGURE 6.6.2.2.3 *Restraint Straps for Tees. [24:Figure 10.6.2.2.3]*

EDUFIRE.IR

TABLE 6.6.2.2.3 Restraint Straps for Tees

Nominal Pipe Size		A		B		C		D	
in.	mm	in.	mm	in.	mm	in.	mm	in.	mm
4	100	12½	318	10⅛	257	2½	64	1¾	44
6	150	14½	368	12⅛	308	3 9/16	90	21 3/16	71
8	200	16¾	425	14⅜	365	42 1/32	118	32 9/32	99
10	250	19 1/16	484	16 11/16	424	5¾	146	5	127
12	300	22 5/16	567	19 3/16	487	6¾	171	5⅞	149

[**24:**Table 10.6.2.2.3]

6.6.2.3 Sizes of Plug Strap for Bell End of Pipe. [**24:**10.6.2.3]

6.6.2.3.1 The strap shall be ¾ in. (20 mm) thick and 2½ in. (65 mm) wide. [**24:**10.6.2.3.1]

6.6.2.3.2 The strap length shall be the same as dimension *A* for tee straps as shown in Figure 6.6.2.2.3. [**24:**10.6.2.3.2]

6.6.2.3.3 The distance between the centers of rod holes shall be the same as dimension *B* for tee straps as shown in Figure 6.6.2.2.3. [**24:**10.6.2.3.3]

6.6.2.4 Material. Clamps, rods, rod couplings or turnbuckles, bolts, washers, restraint straps, and plug straps shall be of a material that has physical and chemical characteristics that indicate its deterioration under stress can be predicted with reliability. [**24:**10.6.2.4]

6.6.2.5* Corrosion Resistance. After installation, rods, nuts, bolts, washers, clamps, and other restraining devices shall be cleaned and thoroughly coated with a bituminous or other acceptable corrosion-retarding material. [**24:**10.6.2.5]

A.6.6.2.5 Examples of materials and the standards covering these materials are as follows:

(1) Clamps, steel
(2) Rods, steel
(3) Bolts, steel (ASTM A307, *Standard Specification for Carbon Steel Bolts, Studs, Threaded Rod 60,000 psi Tensile Strength*)
(4) Washers, steel, cast iron (Class A cast iron as defined by ASTM A126, *Standard Specification for Gray Iron Castings for Valves, Flanges and Pipe Fittings*)
(5) Anchor straps, plug straps, steel
(6) Rod couplings, turnbuckles, malleable iron (ASTM A197/A197M, *Standard Specification for Cupola Malleable Iron*)

The materials specified in A.6.6.2.5(1) through A.6.6.2.5(6) do not preclude the use of other materials that will also satisfy the requirements of this section. [**24:**A.10.6.2.5]

6.6.2.5.1 The requirements of 6.6.2.5 shall not apply to epoxy-coated fittings, valves, glands, or other accessories. [**24:**10.6.2.5.1]

6.6.3* Private fire service mains utilizing one or more of the following connection methods shall not require additional restraint, provided that such joints can pass the hydrostatic test of 6.10.2.2 without shifting of piping.

(1) Threaded connections
(2) Grooved connections
(3) Welded connections
(4) Heat-fused connections
(5) Chemical or solvent cemented connections

[**24:**10.6.3]

EDUFIRE.IR

A.6.6.3 Solvent-cemented and heat-fused joints such as those used with CPVC piping and fittings are considered restrained. They do not require thrust blocks. [**24:**A.10.6.3]

6.7 Steep Grades.

[**24:**10.7]

6.7.1 On steep grades, mains shall be additionally restrained to prevent slipping. [**24:**10.7.1]

6.7.1.1 Pipe shall be restrained at the bottom of a hill and at any turns (lateral or vertical). [**24:**10.7.1.1]

6.7.1.1.1 The restraint specified in 6.7.1.1 shall be to natural rock or to suitable piers built on the downhill side of the bell. [**24:**10.7.1.1.1]

6.7.1.2 Bell ends shall be installed facing uphill. [**24:**10.7.1.2]

6.7.1.3 Straight runs on hills shall be restrained as determined by a design professional. [**24:**10.7.1.3]

6.8 Installation Requirements.

[**24:**10.8]

The precautions that must be taken during the installation to minimize damage to underground piping, to eliminate stresses, and to ensure a long service life are outlined in Section 6.8. In the United States, the federal Occupational Safety and Health Administration (OSHA) has a number of requirements relating to safety issues involved in underground piping installation.

Trenching operations might require sloping, shoring, or shielding of the trench. Soil classification must be determined to select the correct options. In the absence of soil classification, sloping of the excavation wall can be performed with the slope limited to 1½ horizontal to 1 vertical, which is a maximum of 34 degrees from horizontal.

Confined space entry procedures are often triggered when access is needed to control valves located in pits. For that reason, control valves are brought above ground in areas where freezing is not a concern, and special prefabricated heated enclosures (see Exhibit 6.4) are available to allow aboveground valve installations in areas subject to freezing.

SEE ALSO

29 CFR 1926, Subpart P, for OSHA regulations on excavations, and 29 CFR 1910.146 for OSHA regulations on confined spaces.

6.8.1 Piping, valves, hydrants, gaskets, and fittings shall be inspected for damage when received and shall be inspected prior to installation. [**24:**10.8.1]

6.8.2 The tightness of bolted joints shall be verified by the bolt torque or by the method described in the listing information or manufacturer's installation instructions. [**24:**10.8.2]

6.8.3 Pipe, valves, hydrants, and fittings shall be clean and free from internal debris. [**24:**10.8.3]

Precautions must be taken to prevent rocks and other foreign materials from entering piping during installation. These materials can be carried into fire protection system piping and cause obstructions and system failure during a fire. Care during installation is important, but it does not eliminate the need to flush the piping as part of the acceptance testing. Exhibit 6.5 illustrates debris that was expelled from underground piping while the system was being flushed.

6.8.4 When work is stopped, the open ends of piping, valves, hydrants, and fittings shall be plugged or covered to prevent foreign materials from entering. [**24:**10.8.4]

EDUFIRE.IR

EXHIBIT 6.4 Heated Enclosure. (Courtesy of AquaSHIELD)

EXHIBIT 6.5 Debris Removed from Underground Piping. (Courtesy of FM Global)

6.8.5 All piping, fittings, valves, and hydrants shall be examined for cracks or other defects while suspended above the trench and lowered into the trench using appropriate equipment. [**24:**10.8.5]

6.8.6 Plain ends shall be inspected for signs of damage prior to installation. [**24:**10.8.6]

6.8.7 Piping, fittings, valves, hydrants, and appurtenances shall not be dropped, dumped or rolled or skidded against other materials. [**24:**10.8.7]

6.8.8 Pipes shall be supported in the trench throughout their full length and shall not be supported by the bell ends only or by blocks. [**24:**10.8.8]

6.8.9 If the ground is soft, other means shall be provided to support the pipe. [**24:**10.8.9]

6.8.10 Valves and fittings used with nonmetallic pipe shall be supported and restrained in accordance with the manufacturer's installation instructions. [**24:**10.8.10]

EDUFIRE.IR

6.9 Backfilling.

[**24:**10.9]

6.9.1 Backfill material shall be tamped in layers or in puddles under and around pipes to prevent settlement or lateral movement and shall contain no ashes, cinders, refuse, organic matter, or other corrosive materials. [**24:**10.9.1]

Improper backfill is a major cause of underground piping failures. Proper consolidation of backfill can prevent voids that eventually place stress on the piping and joints.

Underground piping should be laid on a firm bed of earth for its entire length, with the earth scooped out at the joints. Clean earth, sand, or screened gravel should be tamped under, around, and above the pipe to a level of 12 in. (300 mm) above. The excavation should then be backfilled to grade, compacting the fill layers in the trench as they are added. Puddling, which involves the use of water to help consolidate soil around and below the piping, is occasionally used to assist the backfill compaction effort.

6.9.2 Backfill material shall not contain ash, cinders, refuse, organic matter or other corrosive materials. [**24:**10.9.2]

Clean fill cushions the pipe and evenly distributes the load to the surrounding earth. The presence of cinders, refuse, and other organic matter can create points of accelerated corrosion that can reduce the life of underground piping.

N **6.9.3*** In the absence of specific guidelines or specifications, the maximum allowable particle size for backfill within 1 ft (300 mm) of the pipe shall not be larger than 1½ in. (40 mm). [**24:**10.9.3]

N **A.6.9.3** The maximum particle size allowed next to most types of pipe can be found in ASTM C136/136M, *Standard Test Method for Sieve Analysis of Fine and Coarse Aggregates,* ASTM D2487, *Standard Practice for Classification of Soils for Engineering Purposes (Unified Soil Classification System),* AWWA M55, *PE Pipe — Design and Installation*, AWWA M23, *PVC Pipe — Design and Installation,* trade association handbooks, or manufacturers' literature. These publications typically recommend one maximum allowable particle size that applies to the bedding, embedment, and backfill, which might be different materials. The maximum particle size might be dependent on the pipe diameter. [**24:**A.10.9.3]

N **6.9.3.1** Nominal pipe sizes of 4 in. (100 mm) or smaller shall not exceed ½ in. (13 mm) maximum particle size. [**24:**10.9.3.1]

N **6.9.3.2** Nominal pipe sizes of 6 in. to 12 in. (150 mm to 300 mm) shall not exceed ¾ in. (19 mm) maximum particle size. [**24:**10.9.3.2]

6.9.4 Frozen earth shall not be used as backfill material. [**24:**10.9.4]

6.9.5 In trenches cut through rock, tamped backfill shall be used for at least 6 in. (150 mm) under and around the pipe and for at least 2 ft (600 mm) above the pipe. [**24:**10.9.5]

6.9.6 Where using piping listed for private fire service mains, the manufacturer's installation instructions for backfill shall be followed. [**24:**10.9.6]

EDUFIRE.IR

6.10 Testing and Acceptance.

[**24:**10.10]

6.10.1 Approval of Underground Piping. The installing contractor shall be responsible for the following:

(1) Notifying the AHJ and the owner's representative of the time and date testing is to be performed
(2) Performing all required acceptance tests
(3) Completing and signing the contractor's material and test certificate(s) shown in Figure 6.10.1

[**24:**10.10.1]

6.10.2 Acceptance Requirements. [**24:**10.10.2]

ASK THE AHJ

If acceptance testing already has been witnessed by the water department or authority, does the installer need to perform the testing again so the fire department can witness the testing?

Yes, in most cases. A vast majority of the water department testing requirements are based on decontaminating and/or chlorination of the underground piping and domestic pressure tests using AWWA standards. That testing typically is not comprehensive enough to meet the requirements of NFPA 13 and NFPA 24 for flushing debris that can obstruct a sprinkler system from the pipes. Additionally, fire service mains and combination domestic/fire service mains are typically designed for much higher pressures than domestic-only piping.

6.10.2.1* Flushing of Piping. [**24:**10.10.2.1]

Prior to connection of the aboveground sprinkler piping to the underground service, the contractor installing the aboveground piping is responsible for obtaining documentation that certifies that the requirements of Section 6.10 and the form shown in Figure 6.10.1 have been properly completed. For this requirement, see the row titled "Tests" in Figure 28.1. If the aboveground contractor connects the aboveground piping to the underground service without proper system flushing, a full obstruction investigation will be necessary to ensure that debris is not in the sprinkler system.

A.6.10.2.1 Underground mains and lead-in connections to system risers should be flushed through hydrants at dead ends of the system or through accessible aboveground flushing outlets allowing the water to run until clear. Figure A.6.10.2.1 shows acceptable examples of flushing the system. If water is supplied from more than one source or from a looped system, divisional valves should be closed to produce a high-velocity flow through each single line. The flows specified in Table 6.10.2.1.3 will produce a velocity of at least 10 ft/sec (3.0 m/sec), which is necessary for cleaning the pipe and for lifting foreign material to an aboveground flushing outlet. [**24:**A.10.10.2.1]

6.10.2.1.1 Underground piping, from the water supply to the system riser, and lead-in connections to the system riser, including all hydrants, shall be completely flushed before connection is made to downstream fire protection system piping. [**24:**10.10.2.1.1]

6.10.2.1.2 The flushing operation shall continue until water flow is verified to be clear of debris. [**24:**10.10.2.1.2]

SEE ALSO

NFPA 25, *Standard for the Inspection, Testing, and Maintenance of Water-Based Fire Protection Systems,* for information on conducting a full obstruction investigation.

FAQ [A.6.10.2.1]

Why is flushing of the underground piping required?

Stones, gravel, blocks of wood, plastic drink bottles, work tools, work clothes, and other objects have been found in piping when flushing procedures were performed. Objects in underground piping that are quite remote from a sprinkler installation and that would otherwise remain stationary can sometimes be carried into sprinkler system piping when sprinkler systems operate and large flow rates are present in the piping.

EDUFIRE.IR

Contractor's Material and Test Certificate for Underground Piping

PROCEDURE

Upon completion of work, inspection and tests shall be made by the contractor's representative and witnessed by an owner's representative. All defects shall be corrected and system left in service before contractor's personnel finally leave the job.

A certificate shall be filled out and signed by both representatives. Copies shall be prepared for approving authorities, owners, and contractor. It is understood the owner's representative's signature in no way prejudices any claim against contractor for faulty material, poor workmanship, or failure to comply with approving authority's requirements or local ordinances.

Property name		Date
Property address		
Plans	Accepted by approving authorities (names)	
	Address	
	Installation conforms to accepted plans	❑ Yes ❑ No
	Equipment used is approved If no, state deviations	❑ Yes ❑ No
Instructions	Has person in charge of fire equipment been instructed as to location of control valves and care and maintenance of this new equipment? If no, explain	❑ Yes ❑ No
	Have copies of appropriate instructions and care and maintenance charts been left on premises? If no, explain	❑ Yes ❑ No
Location	Supplies buildings	
Underground pipes and joints	Pipe types and class	Type joint
	Pipe conforms to _____ standard Fittings conform to _____ standard If no, explain	❑ Yes ❑ No ❑ Yes ❑ No
	Joints needing anchorage clamped, strapped, or blocked in accordance with _____ standard If no, explain	❑ Yes ❑ No
Test description	Flushing: Flow the required rate until water is clear as indicated by no collection of foreign material in burlap bags at outlets such as hydrants and blow-offs. Flush in accordance with the requirements of 6.10.2.1.3. Hydrostatic: All piping and attached appurtenances subjected to system working pressure shall be hydrostatically tested at 200 psi (13.8 bar) or 50 psi (3.4 bar) in excess of the system working pressure, whichever is greater, and shall maintain that pressure ±5 psi (0.34 bar) for 2 hours. Hydrostatic Testing Allowance: Where additional water is added to the system to maintain the test pressures required by 6.10.2.2.1, the amount of water shall be measured and shall not exceed the limits of the following equation (for metric equation, see 6.10.2.2.6): $L = \frac{SD\sqrt{P}}{148{,}000}$ L = testing allowance (makeup water), in gallons per hour S = length of pipe tested, in feet D = nominal diameter of the pipe, in inches P = average test pressure during the hydrostatic test, in pounds per square inch (gauge)	
Flushing tests	New underground piping flushed according to _____ standard by (company) If no, explain	❑ Yes ❑ No
	How flushing flow was obtained ❑ Public water ❑ Tank or reservoir ❑ Fire pump	Through what type opening ❑ Hydrant butt ❑ Open pipe
	Lead-ins flushed according to _____ standard by (company) If no, explain	❑ Yes ❑ No
	How flushing flow was obtained ❑ Public water ❑ Tank or reservoir ❑ Fire pump	Through what type opening ❑ Y connection to flange and spigot ❑ Open pipe

© 2018 National Fire Protection Association NFPA 13 (p. 1 of 2)

FIGURE 6.10.1 Sample of Contractor's Material and Test Certificate for Underground Piping. [24:Figure 10.10.1]

EDUFIRE.IR

Hydrostatic test	All new underground piping hydrostatically tested at _____ psi for _____ hours		Joints covered ❑ Yes ❑ No
Leakage test	Total amount of leakage measured _____ gallons _____ hours		
	Allowable leakage _____ gallons _____ hours		
Forward flow test of backflow preventer	Foward flow test performed in accordance with 6.10.2.5.2: ❑ Yes ❑ No		
Hydrants	Number installed	Type and make	All operate satisfactorily ❑ Yes ❑ No
Control valves	Water control valves left wide open If no, state reason		❑ Yes ❑ No
	Hose threads of fire department connections and hydrants interchangeable with those of fire department answering alarm		❑ Yes ❑ No
Remarks	Date left in service		
Signatures	Name of installing contractor		
	Tests witnessed by		
	For property owner (signed)	Title	Date
	For installing contractor (signed)	Title	Date

Additional explanation and notes

© 2018 National Fire Protection Association NFPA 13 (p. 2 of 2)

FIGURE 6.10.1 *Continued*

EDUFIRE.IR

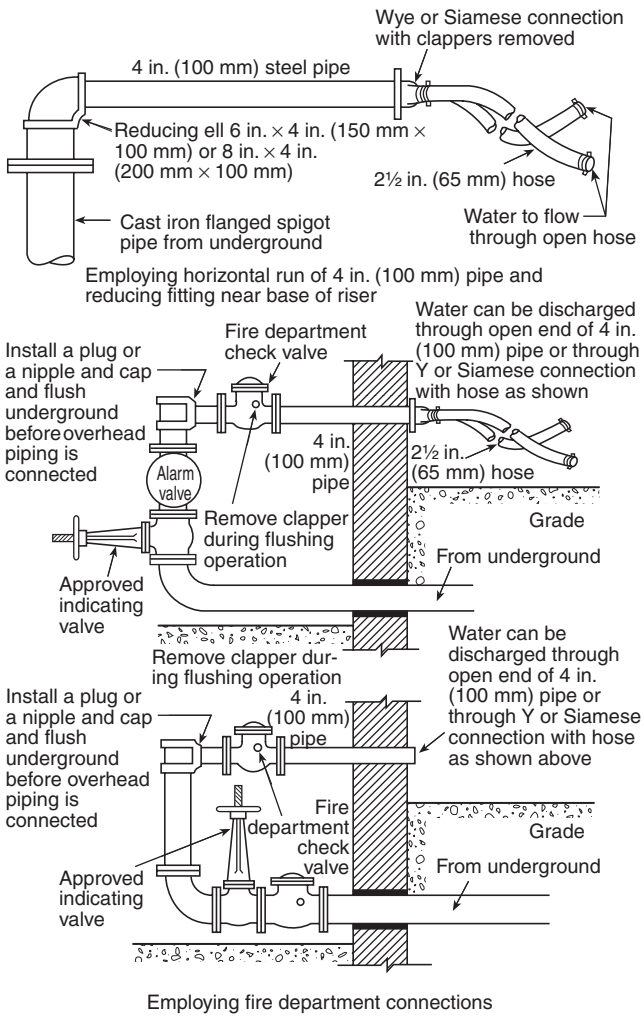

FIGURE A.6.10.2.1 *Methods of Flushing Water Supply Connections. [24:Figure A.10.10.2.1]*

TABLE 6.10.2.1.3 *Flow Required to Produce Velocity of 10 ft/sec (3.0 m/sec) in Pipes*

Nominal Pipe Size		*Flow Rate*	
in.	*mm*	*gpm*	*L/min*
2	50	100	380
2½	65	150	568
3	75	220	833
4	100	390	1,500
5	125	610	2,300
6	150	880	3,350
8	200	1,560	5,900
10	250	2,440	9,250
12	300	3,520	13,300

[**24:**Table 10.10.2.1.3]

6.10.2.1.3* The minimum rate of flow shall be in accordance with Table 6.10.2.1.3. [**24:**10.10.2.1.3]

N **A.6.10.2.1.3** The velocity of approximately 10 ft/sec (3.0 m/sec) was used to develop Table 6.10.2.1.3 because this velocity has been shown to be sufficient for moving obstructive material out of the pipes. It is not important that the velocity equal exactly 10 ft/sec (3.0 m/sec), so there is no reason to increase the flow during the test for slightly different internal pipe dimensions. Note that where underground pipe serves as suction pipe for a fire pump, NFPA 20 requires greater flows for flushing the pipe. [**24:**A.10.10.2.1.3]

6.10.2.1.3.1 Where the flow rates established in Table 6.10.2.1.3 are not attainable, the maximum flow rate available to the system shall be acceptable. [**24:**10.10.2.1.3.1]

In some cases, the fire protection water supply might not be capable of producing the flows listed in Table 6.10.2.1.3. If the flow rate is not available, then the maximum available flow must be used to ensure that any debris in the piping will be dislodged during the flushing operation.

EDUFIRE.IR

Sprinkler systems can draw greater flows than most domestic or process uses. Fire department pumpers taking suction from hydrants for pumping into sprinkler systems and normal fire-fighting operations further increase flow rates and velocities and can dislodge other materials in the piping network, forcing them into sprinkler system piping.

Because of the inherent nature of sprinkler system design in which pipe sizes usually decrease beginning at the point of connection to the underground piping, objects that move from the underground piping into the sprinkler system can become lodged at a point in the system where they could obstruct the passage of water. Exhibit 6.6 shows an object that was carried from the underground piping into the sprinkler system. When the dry pipe valve was reset, the object was discovered.

Studies by FM Global concluded that the size of objects that will move upward in piped water streams can be determined if the density of the object and the velocity of the water stream are known. For example, granite that is 2 in. (50 mm) in diameter will move upward in piping if the water stream velocity is 5.64 ft/sec (1.72 m/sec). The flow rates in Table 6.10.2.1.3 reflect velocities of approximately 10 ft/sec (3 m/sec), which is generally agreed on as a reasonably fast flow capable of removing most obstructing debris.

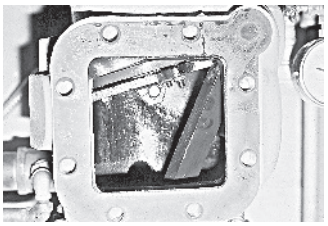

EXHIBIT 6.6 *Object Trapped in Dry Pipe Sprinkler System.*

6.10.2.1.4 Provision shall be made for the proper disposal of water used for flushing or testing. [**24:**10.10.2.1.4]

6.10.2.2 Hydrostatic Test. [**24:**10.10.2.2]

6.10.2.2.1* All piping and attached appurtenances subjected to system working pressure shall be hydrostatically tested at gauge pressure of 200 psi (13.8 bar) or 50 psi (3.4 bar) in excess of the system working pressure, whichever is greater, and shall maintain that pressure at gauge pressure of ±5 psi (0.34 bar) for 2 hours. [**24:**10.10.2.2.1]

A.6.10.2.2.1 For example, consider a sprinkler system with a connection to a public water service main for its water supply. A 100 psi (6.9 bar) rated pump is installed in the connection. With a maximum normal public water supply of 70 psi (4.8 bar) at the low elevation point of the individual system or portion of the system being tested and a 120 psi (8.3 bar) pump (churn) pressure, the hydrostatic test pressure is 70 psi (4.8 bar), 120 psi (8.3 bar), 50 psi (3.5 bar), or 240 psi (16.5 bar).

To reduce the possibility of serious water damage in case of a break, pressure can be introduced by a small pump, the main controlling gate meanwhile being kept shut during the test.

Polybutylene pipe will undergo expansion during initial pressurization. In this case, a reduction in gauge pressure might not necessarily indicate a leak. The pressure reduction should not exceed the manufacturer's specifications and listing criteria.

When systems having rigid thermoplastic piping such as CPVC are pressure tested, the sprinkler system should be filled with water. The air should be bled from the highest and farthest sprinklers. Compressed air or compressed gas should never be used to test systems with rigid thermoplastic pipe.

A recommended test procedure is as follows: The water pressure is to be increased in 50 psi (3.5 bar) increments until the test pressure described in 6.10.2.2.1 is attained. After each increase in pressure, observations are to be made of the stability of the joints. These observations are to include such items as protrusion or extrusion of the gasket, leakage, or other factors likely to affect the continued use of a pipe in service. During the test, the pressure is not to be increased by the next increment until the joint has become stable. This applies particularly to movement of the gasket. After the pressure has been increased to the required maximum value, it is held for 2 hours while observations are made for leakage and the pressure readings are checked. [**24:**A.10.10.2.2.1]

6.10.2.2.2 Acceptable test results shall be determined by indication of either a pressure loss less than gauge pressure of 5 psi or by no visual leakage. [**24:**10.10.2.2.2]

EDUFIRE.IR

6.10.2.2.3 The test pressure shall be read from one of the following, located at the lowest elevation of the system or the portion of the system being tested:

(1) A gauge located at one of the hydrant outlets
(2) A gauge located at the lowest point where no hydrants are provided

[**24:**10.10.2.2.3]

6.10.2.2.4* The trench shall be backfilled between joints before testing to prevent movement of pipe. [**24:**10.10.2.2.4]

The trench must be backfilled prior to hydrostatic testing to prevent movement of underground piping. The backfilling can take place between joints if it is desired that the joints be observed for leakage and if the backfill depth is sufficient to prevent movement. As an alternative, the joints can also be covered, but the contractor remains responsible for locating and correcting excessive leakage.

A 2-hour hydrostatic test is required at not less than 200 psi (13.8 bar) and at least 50 psi (3.4 bar) above the maximum expected static pressure. The piping between an exterior fire department connection and the check valve in the connection's inlet pipe also must be hydrostatically tested. All thrust blocks should be hardened before testing takes place.

A.6.10.2.2.4 Hydrostatic tests should be made before the joints are covered, so that any leaks can be detected. Thrust blocks should be sufficiently hardened before hydrostatic testing is begun. If the joints are covered with backfill prior to testing, the contractor remains responsible for locating and correcting any leakage in excess of that permitted. [**24:**A.10.10.2.2.4]

6.10.2.2.5 Where required for safety measures presented by the hazards of open trenches, the pipe and joints shall be permitted to be backfilled, provided the installing contractor takes the responsibility for locating and correcting leakage. [**24:**10.10.2.2.5]

FAQ [6.10.2.2.6]

On what factors are allowable leakage rates based?

Allowable leakage rates during hydrostatic testing are based on the total length and diameter of the underground piping. In the past, the allowable leakage had been based on the number of gaskets or joints, regardless of pipe diameter.

When underground piping is repaired, it should be tested as a new installation, but it is not required that all the underground piping be subjected to the hydrostatic test if the area of the repair can be isolated. Blind flanges or skillets can be used for this purpose. Procedures must be implemented to ensure that those devices are removed following hydrostatic testing.

6.10.2.2.6* **Hydrostatic Testing Allowance.** Where additional water is added to the system to maintain the test pressures required by 6.10.2.2.1, the amount of water shall be measured and shall not exceed the limits of Table 6.10.2.2.6, which are based upon the following equations:

U.S. Customary Units:

$$L = \frac{SD\sqrt{P}}{148{,}000} \qquad \textbf{[6.10.2.2.6a]}$$

where:

L = testing allowance (makeup water) [gph (gal/hr)]
S = length of pipe tested (ft)
D = nominal diameter of pipe (in.)
P = average test pressure during hydrostatic test (gauge psi)

Metric Units:

$$L = \frac{SD\sqrt{P}}{794{,}797} \qquad \textbf{[6.10.2.2.6b]}$$

where:

L = testing allowance (makeup water) (L/hr)
S = length of pipe tested (m)
D = nominal diameter of pipe (mm)
P = average test pressure during hydrostatic test (kPa) [**24:**10.10.2.2.6]

EDUFIRE.IR

TABLE 6.10.2.2.6 *Hydrostatic Testing Allowance at 200 psi (13.8 bar) (gph/100 ft of Pipe) (lph/100 m of Pipe)*

Nominal Pipe Diameter [in. (mm)]	*Testing Allowance [gph/100 ft of pipe (lph/100 m of pipe)]*
2 (50)	0.019 (0.475)
4 (100)	0.038 (0.95)
6 (150)	0.057 (1.425)
8 (200)	0.076 (1.9)
10 (250)	0.096 (2.58)
12 (300)	0.115 (3.09)
14 (350)	0.134 (3.35)
16 (400)	0.153 (3.83)
18 (450)	0.172 (4.3)
20 (500)	0.191 (4.78)
24 (600)	0.229 (5.73)

Notes:

(1) For other length, diameters, and pressures, utilize Equation 6.10.2.2.6a or 6.10.2.2.6b to determine the appropriate testing allowance.

(2) For test sections that contain various sizes and sections of pipe, the testing allowance is the sum of the testing allowances for each size and section.

[**24:**Table 10.10.2.2.6]

A.6.10.2.2.6 One acceptable means of completing this test is to utilize a pressure pump that draws its water supply from a full container. At the completion of the 2-hour test, the amount of water to refill the container can be measured to determine the amount of makeup water. In order to minimize pressure loss, the piping should be flushed to remove any trapped air. Additionally, the piping could be pressurized prior to the hydrostatic test to account for expansion, absorption, entrapped air, and so on.

The use of a blind flange or skillet is preferred for hydrostatically testing segments of new work. Metal-seated valves are susceptible to developing slight imperfections during transport, installation, and operation and thus can be likely to leak more than 1 fl oz/in. (1.2 mL/mm) of valve diameter per hour. For this reason, the blind flange should be used when hydrostatically testing. [**24:**A.10.10.2.2.6]

6.10.2.3* Other Means of Hydrostatic Tests. Where acceptable to the AHJ, hydrostatic tests shall be permitted to be completed in accordance with the guidelines provided in AWWA C600, *Installation of Ductile-Iron Mains and Their Appurtenances,* AWWA M9, *Concrete Pressure Pipe,* AWWA M23, *PVC Pipe — Design and Installation,* or AWWA M55, *PE Pipe — Design and Installation,* as long as the test pressure and test duration requirements of 6.10.2.2.1 are still employed. [**24:**10.10.2.3]

N **A.6.10.2.3** As an example, the following standards contain test requirements AWWA C600, *Installation of Ductile-Iron Water Mains and Their Appurtenances*, AWWA C602, *Cement-Mortar Lining of Water Pipe Lines in Place, 4 in. (100 mm) and Larger*, AWWA C900, *Polyvinyl Chloride (PVC) Pressure Pipe, 4 in. Through 12 in. (100 mm Through 300 mm), for Water Transmission and Distribution*, or ASTM F2164, *Standard Practice for Field Leak Testing of Polyethylene (PE) and Crosslinked Polyethylene (PEX) Pressure Piping Systems Using Hydrostatic Pressure*. [**24:**A.10.10.2.3]

EDUFIRE.IR

6.10.2.4 Operating Test. [**24:**10.10.2.4]

6.10.2.4.1 Each hydrant shall be fully opened and closed under system water pressure. [**24:**10.10.2.4.1]

6.10.2.4.2 Dry barrel hydrants shall be checked for proper drainage. [**24:**10.10.2.4.2]

6.10.2.4.3 All control valves shall be fully closed and opened under system water pressure to ensure proper operation. [**24:**10.10.2.4.3]

6.10.2.4.4 Where fire pumps supply the private fire service main, the operating tests required by 6.10.2.4 shall be completed with the pumps running. [**24:**10.10.2.4.4]

6.10.2.5 Backflow Prevention Assemblies. [**24:**10.10.2.5]

6.10.2.5.1 The backflow prevention assembly shall be forward flow tested to ensure proper operation. [**24:**10.10.2.5.1]

6.10.2.5.2 The minimum flow rate tested in 6.10.2.5.1 shall be the system demand, including hose stream demand where applicable. [**24:**10.10.2.5.2]

References Cited in Commentary

National Fire Protection Association, 1 Batterymarch Park, Quincy, MA 02169-7471.

NFPA 24, *Standard for the Installation of Private Fire Service Mains and Their Appurtenances*, 2019 edition.

NFPA 25, *Standard for the Inspection, Testing, and Maintenance of Water-Based Fire Protection Systems*, 2017 edition.

NFPA 70®, *National Electrical Code®*, 2017 edition.

American Water Works Association, 6666 West Quincy Avenue, Denver, CO 80235.

AWWA C104/A21.4, *Cement-Mortar Lining for Ductile-Iron Pipe and Fittings*, 2013.

AWWA C105/A21.5, *Polyethylene Encasement for Ductile-Iron Pipe Systems*, 2010.

AWWA C111/A21.11, *Rubber-Gasket Joints for Ductile-Iron Pressure Pipe and Fittings*, 2012.

AWWA C203, *Coal-Tar Protective Coatings and Linings for Steel Water Pipelines*, 2015.

Underwriters Laboratories Inc., 333 Pfingsten Road, Northbrook, IL 60062-2096.

UL 194, *Gasketed Joints for Ductile-Iron Pipe and Fittings for Fire Protection Service*, 2005.

U.S. Government Publishing Office, Washington, DC 20402.

Title 29, Code of Federal Regulations, Part 1910.146, Appendix A.

Title 29, Code of Federal Regulations, Part 1926, Subpart P, Appendix F.

EDUFIRE.IR

CHAPTER

7

Requirements for System Components and Hardware

REORGANIZATION NOTE

Chapter 7 is basically a relocation of Chapter 6 of the 2016 edition with some exceptions. Portions of the former Chapter 6 were relocated to Chapter 16, Installation of Piping, Valves, and Appurtenances, keeping Chapter 7 a source of requirements for components and hardware without referring to installation requirements.

Chapter 7 identifies the types of materials and components that are acceptable for use in a sprinkler system and addresses their associated features and limitations. Chapter 7 covers system components and hardware, including sprinklers, aboveground pipe and tubing, and fittings, as well as requirements for joining of pipe and fittings, valves, fire department connections, and waterflow alarms. Information concerning proper installation of system materials and components is contained in Chapter 8.

7.1 General.

This chapter shall provide requirements for correct use of sprinkler system components and hardware.

7.1.1* Listing.

The ability of a sprinkler system to achieve fire control or suppression depends on a number of factors, including the use of effective and reliable system components. To provide a sufficient degree of sprinkler system reliability and performance, NFPA 13 requires that those components critical to system performance during a fire be listed (see 3.2.3 for definition of the term *listed*), with a few exceptions as referenced in this chapter. Components that would not adversely affect system performance if they were to malfunction during a fire are not required to be listed, but they must be approved (see 3.2.1 for the definition of the term *approved*).

A.7.1.1 Included among items requiring listing are sprinklers, some pipe and some fittings, hangers, alarm devices, valves controlling flow of water to sprinklers, supervisory switches, and electrically operated solenoid valves. Products are typically investigated in accordance with published standards. Examples of standards used to investigate several products installed in sprinkler systems are referenced in Table A.7.1.1. This table does not include a comprehensive list of all product standards used to investigate products installed in sprinkler systems.

7.1.1.1 Materials or devices not specifically designated by this standard shall be used in accordance with all conditions, requirements, and limitations of their special listing.

If the application for products developed for sprinkler systems is not specifically described in this standard, specific guidance for proper installation and use will be found in the manufacturer's technical data or installation instructions. This information is required by 7.1.1.1.1 as part of the listing for such products.

FAQ [7.1.1.1]

Why does NFPA 13 require the use of listed components in a sprinkler system?

The requirement for using listed products and materials is intended to increase the likelihood that the system will perform as it was designed when needed. For example, more than 50 different types of tests are performed on a specific model of sprinkler during the listing process. The tests evaluate a number of performance features, such as spray pattern distribution, operating temperature, response characteristics, exposure to corrosive atmospheres, ability to withstand pressure, orifice discharge characteristics, and the strength of the operating element. In addition, listed products are subjected to a surveillance program that monitors the manufacturer's production process to verify continued compliance with the requirements of the listing.

EDUFIRE.IR

TABLE A.7.1.1 *Examples of Standards for Sprinkler System Products*

Category	*Standard*
Sprinklers	ANSI/UL 199, *Automatic Sprinklers for Fire Protection Service* FM 2000, *Automatic Control Mode Sprinklers for Fire Protection* ANSI/UL 1626, *Residential Sprinklers for Fire Protection Service* FM 2030, *Residential Automatic Sprinklers* ANSI/UL 1767, *Early-Suppression Fast-Response Sprinklers* FM 2008, *Suppression Mode ESFR Automatic Sprinklers* FM 1632, *Telescoping Sprinkler Assemblies for Use in Fire Protection Systems for Anechoic Chambers*
Valves	ANSI/UL 193, *Alarm Valves for Fire Protection Service* FM 1041, *Alarm Check Valves* ANSI/UL 260, *Dry Pipe and Deluge Valves for Fire Protection Service* FM 1021, *Dry Pipe Valves* FM 1020, *Automatic Water Control Valves* UL 262, *Gate Valves for Fire Protection Service* FM 1120, 1130, *Fire Service Water Control Valves (OS & Y and NRS Type Gate Valves)* ANSI/UL 312, *Check Valves for Fire Protection Service* FM 1210, *Swing Check Valves* UL 1091, *Butterfly Valves for Fire Protection Service* FM 1112, *Indicating Valves (Butterfly or Ball Type)* ANSI/UL 1468, *Direct Acting Pressure Reducing and Pressure Restricting Valves* ANSI/UL 1739, *Pilot-Operated Pressure-Control Valves for Fire Protection Service* FM 1362, *Pressure Reducing Valves* FM 1011/1012/1013, *Deluge and Preaction Sprinkler Systems* FM 1031, *Quick Opening Devices (Accelerators and Exhausters) for Dry Pipe Valves* ANSI/UL 1486, *Quick Opening Devices for Dry Pipe Valves for Fire Protection Service* ANSI/UL 346, *Waterflow Indicators for Fire Protective Signaling Systems* FM 1042, *Waterflow Alarm Indicators (Vane Type)* FM 1045, *Waterflow Detector Check Valves* FM 1140, *Quick Opening Valves ¼ Inch Through 2 Inch Nominal Size*
Hangers	ANSI/UL 203, *Pipe Hanger Equipment for Fire Protection Service* FM 1951, 1952, 1953, *Pipe Hanger Components for Automatic Sprinkler Systems* FM 1950, *Seismic Sway Brace Components for Automatic Sprinkler Systems* UL 203A, *Sway Brace Devices for Sprinkler System Piping*
Fittings	ANSI/UL 213, *Rubber Gasketed Fittings for Fire Protection Service* FM 1920, *Pipe Couplings and Fittings for Fire Protection Systems* UL 1474, *Adjustable Drop Nipples for Sprinkler Systems* FM 1631, *Adjustable and Fixed Sprinkler Fittings ½ Inch through 1 Inch Nominal Size* ANSI/UL 2443, *Flexible Sprinkler Hose with Fittings for Fire Protection Service* FM 1637, *Flexible Sprinkler Hose with Fittings*
Pipe — Aboveground	ANSI/UL 852, *Metallic Sprinkler Pipe for Fire Protection Service* FM 1630, *Steel Pipe for Automatic Fire Sprinkler Systems* ANSI/UL 1821, *Thermoplastic Sprinkler Pipe and Fittings for Fire Protection Service* FM 1635, *Plastic Pipe & Fittings for Automatic Sprinkler Systems* FM 1636, *Fire Resistant Barriers for Use with CPVC Pipe and Fittings in Light Hazard Occupancies*
Pipe — Underground	UL 1285, *Polyvinyl Chloride (PVC) Pipe and Couplings for Underground Fire Service* FM 1612, *Polyvinyl Chloride (PVC) Pipe and Fittings for Underground Fire Protection Service* FM 1613, *Polyethylene (PE) Pipe and Fittings for Underground Fire Protection Service* FM 1610, *Ductile Iron Pipe and Fittings, Flexible Fittings and Couplings* UL 194, *Gasketed Joints for Ductile-Iron Pipe and Fittings for Fire Protection Service* FM 1620, *Pipe Joints and Anchor Fittings for Underground Fire Service Mains*

EDUFIRE.IR

7.1.1.1.1 All special listing requirements shall be included and identified in the product submittal literature and installation instructions.

7.1.1.2 Unless the requirements of 7.1.1.3, 7.1.1.4, or 7.1.1.5 are met, all materials and devices essential to successful system operation shall be listed.

7.1.1.2.1 Valve components (including valve trim, internal parts, gaskets, and the like) shall not be required to be individually listed.

Valve parts, such as resilient valve seats that require servicing or replacement, are typically not listed. Parts of a listed valve should be replaced with parts specified in the valve installation manual. However, there are valves in service for which the valve manufacturer no longer exists, and equivalent replacement parts are available from alternative sources.

ASK THE AHJ

How can the authority having jurisdiction determine if a system component is being used correctly?

The authority having jurisdiction should refer to the manufacturer's installation instructions, which must contain any special conditions of the product's listing. For the components being installed on the system, this documentation is supposed to be provided to the authority having jurisdiction as part of the shop drawing submittal, in accordance with 27.1.4. Some specially listed products have their listings updated and revised frequently, and the information sheets can be dozens of pages long. The authority having jurisdiction can also use the manufacturer's website to verify that the latest information has been submitted. Typically such websites supply information that can help identify which sprinklers are marked with which sprinkler identification number (SIN) or even describe the conditions necessary such that exposed plastic pipe would be allowed to be installed in an NFPA 13 system.

7.1.1.3 Equipment as permitted in Table 7.3.1.1 and Table 7.4.1 shall not be required to be listed.

7.1.1.3.1 Nonmetallic pipe and fittings included in Table 7.3.1.1 and Table 7.4.1 shall be listed.

7.1.1.4 Materials meeting the requirements of 17.1.2, 17.1.6.2, 17.1.6.3, and 17.1.7.3 shall not be required to be listed.

Experience demonstrates that mild steel rods of the sizes specified in NFPA 13 do not need to be listed. Paragraph 7.1.1.4 recognizes that listed hangers might not be suitable for certain applications and permits hanger assemblies to be designed by a registered professional engineer for such special situations.

7.1.1.5* Components that do not affect system performance shall not be required to be listed.

The assignment of system performance is focused solely on the ability for water to be discharged from the sprinklers. Operational issues, such as avoiding inadvertent activation of a dry pipe system, is not a performance issue. As such, the air compressor in a dry pipe system is not required to be listed. Drain piping, drain valves, and signage, as shown in Exhibit 7.1, are some obvious examples of components that do not affect system performance and, therefore, are not required to be listed. What is not so obvious is that inspectors' test valves (see Exhibit 7.2) and fire department connections (see Exhibit 7.3), which are addressed in 16.9.1.1 and 16.12, do not affect system performance and would also be included in the list of components that are not required to be listed. Starting with the 2013 edition, pressure gauges are no longer required to be listed and need only be approved. The change was made because a faulty gauge will not affect system performance during a fire.

N **A.7.1.1.5** Certain components installed in sprinkler systems are not required to be listed as their improper operation will not detrimentally affect the automatic system performance. Examples include but are not limited to drain valves, drain piping, signs, gauges, automated inspection and test devices, distance monitoring devices, fire department connections that do not use threadless couplings, and so forth.

FAQ [7.1.1.4]

Does NFPA 13 require steel pipe and copper tubing to be listed for fire protection service?

Certain materials, such as Schedule 10, Schedule 30, and Schedule 40 steel pipe, copper tubing, and some of the fittings used with these pipes, are not required to be listed for fire protection service. Pipe manufactured to specific ASTM standards and fittings made to specific ASME standards are considered reliable.

Additionally, many years of positive experience using these materials in sprinkler systems and in other types of mechanical systems support their acceptable performance level. It should be noted that, although listing of these materials is not required by NFPA 13, several manufacturers have chosen to have their products listed.

EDUFIRE.IR

EXHIBIT 7.1 Drain Connection and Signage.

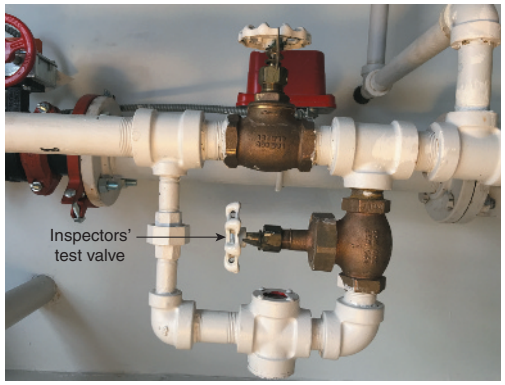

EXHIBIT 7.2 Inspectors' Test Connection Valve.

EXHIBIT 7.3 Fire Department Connection.

Certain devices and equipment that could be used to perform inspection and testing procedures from a distant location are not integral to the system and do not affect system performance. Automated inspection and testing devices and equipment, such as a digital camera, might be in the riser room or attached to the system externally but are not an integral part of the system. Such devices do not need to be listed.

Certain devices and equipment that could be used to monitor system or component status from a distance are not integral to the system and do not affect system performance. Distance monitoring devices, such as an external thermometer, might be attached to the system externally and therefore are not subjected to system pressure. Such devices do not need to be listed.

FAQ [7.1.2]

Does the component with the lowest pressure rating restrict the allowed pressure for the entire system?

Yes. The maximum allowed pressure can vary across the system with the restriction based on the amount of pressure each individual component is exposed to. The no flow, or churn, pressure from a pump can be 200 psi (14 bar), and sprinklers listed for 175 psi (12 bar) can be installed at the ceiling provided there is enough elevation difference to reduce the pressure experienced at the ceiling.

7.1.2 Rated Pressure. System components shall be rated for the maximum system working pressure to which they are exposed but shall not be rated at less than 175 psi (12 bar) for components installed above ground and 150 psi (10 bar) for components installed underground.

Where the system working pressures are expected to exceed pressures of 150 psi (10 bar) and 175 psi (12 bar), system components and materials manufactured and listed for higher pressures must be used. Systems that do not incorporate a fire pump or are not part of a combined standpipe system do not typically experience pressures exceeding 150 psi (10 bar) in underground piping and 175 psi (12 bar) in aboveground piping. It is not uncommon for existing systems to experience pressures higher than the system working pressure. This can be caused by pressure surges being captured by the check valve and thermal expansion. One is not required to account for trapped pressures in defining the component rating. This issue was addressed starting with the 2010 edition by the requirement for a relief valve on all wet pipe systems. It should also be noted that a system can be hydrostatically tested at pressures greater than the component rating.

7.2 Sprinklers.

7.2.1* Sprinkler Identification. All sprinklers shall be permanently marked with one or two English uppercase alphabetic characters to identify the manufacturer, immediately followed by three or four numbers, to uniquely identify a sprinkler as to K-factor, deflector characteristic, pressure rating, and thermal sensitivity.

EDUFIRE.IR

Sprinkler identification markings assist installers, building owners, and authorities in identifying sprinklers installed in the field and minimize the confusion resulting from the growing number and varieties of available sprinklers. All sprinklers are permanently marked with a sprinkler identification number (SIN), as shown in Exhibit 7.4.

EXHIBIT 7.4 Viking Sprinkler Showing SIN on Deflector. (Courtesy of Viking Group, Inc.)

A.7.2.1 The four- to six-character sprinkler identification number, with no intervening spaces, is intended to identify the sprinkler operating characteristics in lieu of the traditional laboratory approval marking (e.g., SSU, SSP, EC, QR, etc.). The number, marked on the deflector of most sprinklers and elsewhere on decorative ceiling sprinklers, consists of one or two characters identifying the manufacturer, followed by three or four digits.

Sprinkler manufacturers have identified their manufacturer designations for the listing organizations. In order to identify a manufacturer based on the Sprinkler Identification Number, see the listing at www.firesprinkler.global. Each change in K-factor, response characteristics, or deflector (distribution) characteristics results in a new sprinkler identification number. The numbers do not identify specific characteristics of sprinklers but can be referenced in the database information compiled by the listing organizations. At the plan review stage, the sprinkler identification number should be checked against such a database or the manufacturer's literature to ensure that sprinklers are being used properly and within the limitations of their listings. Field inspections can include spot checks to ensure that the model numbers on the plans are those actually installed.

7.2.2 Sprinkler Discharge Characteristics.

7.2.2.1* General. Unless the requirements of 7.2.2.2, 7.2.2.3, or 7.2.2.4 are met, the K-factor, relative discharge, and marking identification for sprinklers having different K-factors shall be in accordance with Table 7.2.2.1.

TABLE 7.2.2.1 *Sprinkler Discharge Characteristics Identification*

Nominal K-Factor [gpm/(psi)$^{1/2}$]	*Nominal K-Factor [L/min/(bar)$^{1/2}$]*	*K-Factor Range [gpm/(psi)$^{1/2}$]*	*K-Factor Range [L/min/(bar)$^{1/2}$]*	*Percent of Nominal K-5.6 Discharge*	*Thread Type*
1.4	20	1.3–1.5	19–22	25	½ in. (15 mm) NPT
1.9	27	1.8–2.0	26–29	33.3	½ in. (15 mm) NPT
2.8	40	2.6–2.9	38–42	50	½ in. (15 mm) NPT
4.2	60	4.0–4.4	57–63	75	½ in. (15 mm) NPT
5.6	80	5.3–5.8	76–84	100	½ in. (15 mm) NPT
8.0	115	7.4–8.2	107–118	140	¾ in. (20 mm) NPT or ½ in. (15 mm) NPT
11.2	160	10.7–11.7	159–166	200	½ in. (15 mm) NPT or ¾ in. (20 mm) NPT
14.0	200	13.5–14.5	195–209	250	¾ in. (20 mm) NPT
16.8	240	16.0–17.6	231–254	300	¾ in. (20 mm) NPT
19.6	280	18.6–20.6	272–301	350	1 in. (25 mm) NPT
22.4	320	21.3–23.5	311–343	400	1 in. (25 mm) NPT
25.2	360	23.9–26.5	349–387	450	1 in. (25 mm) NPT
28.0	400	26.6–29.4	389–430	500	1 in. (25 mm) NPT

Note: The nominal K-factor for dry-type sprinklers are used for sprinkler selection. See 27.2.4.10.3 for use of adjusted dry-type sprinkler K-factors for hydraulic calculation purposes.

Exhibit 7.5 and Exhibit 7.6 illustrate the differences in orifice sizes among sprinklers with K-factors of 2.8, 5.6, and 25.2.

EDUFIRE.IR

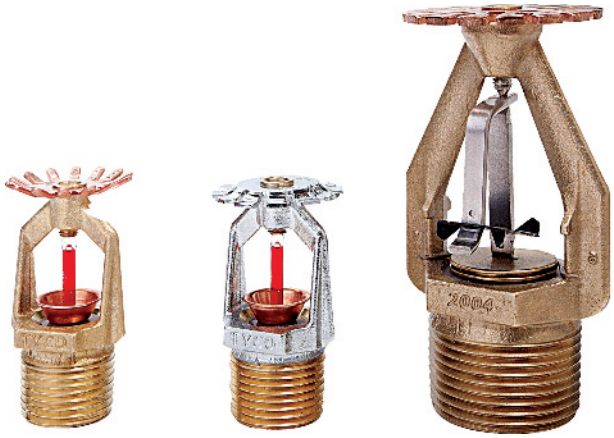

EXHIBIT 7.5 Sprinklers with K-factors of 2.8, 5.6, and 25.2. (Courtesy of Tyco Fire Products LP)

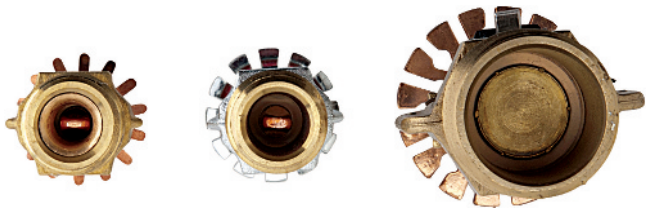

EXHIBIT 7.6 Comparison of Orifices of Sprinklers with K-factors of 2.8, 5.6, and 25.2. (Courtesy of Tyco Fire Products LP)

A.7.2.2.1 See Table A.7.2.2.1.

TABLE A.7.2.2.1 *Nominal Sprinkler Orifice Sizes*

Nominal K-Factor		*Nominal Orifice Size*	
U.S. [gpm/(psi)$^{1/2}$]	*Metric [L/min/(bar)$^{1/2}$]*	*in.*	*mm*
1.4	20	¼	6.4
1.9	27	5⁄16	8.0
2.8	40	⅜	10
4.2	60	7⁄16	11
5.6	80	½	13
8.0	115	17⁄32	13
11.2	160	⅝	16
14.0	200	¾	20
16.8	240	—	—
19.6	280	—	—
22.4	320	—	—
25.2	360	—	—
28.0	400	—	—

Beginning in the 1999 edition of NFPA 13, sprinkler orifice sizes have been identified according only to the sprinkler's nominal K-factor. The nominal orifice sizes specified in NFPA 13 prior to the 1999 edition are retained in Table A.7.2.2.1 as a reference for correlation to the nominal K-factors.

Sprinklers can have a K-factor that differs from the nominal K-factor values specified in Table 7.2.2.1. However, except for residential sprinklers (see 7.2.2.4), the K-factor must lie within the ranges provided in Table 7.2.2.1. The nominal K-factor value indicated in the table must be used to determine the sprinkler's flow rate at a particular pressure in the calculations for hydraulically designed systems.

In the 2010 edition, the K-factor range for the nominal K-11.2 was expanded from K-11.0 to 11.5 to K-10.7 to 11.7, to be consistent (from a percent tolerance standpoint) with the specified ranges for other nominal K-factors included in Table 7.2.2.1.

7.2.2.2 Pipe Threads. Listed sprinklers having pipe threads different from those shown in Table 7.2.2.1 shall be permitted.

EDUFIRE.IR

Some areas of the world do not commonly use NPT, and threads need to be compatible with the local requirements.

7.2.2.3 K-Factors Greater than K-28 (400). Sprinklers listed with nominal K-factors greater than K-28 (400) shall increase the flow by 100 percent increments when compared with a nominal K-5.6 (80) sprinkler.

The requirement in 7.2.2.3 provides guidance for the future development of sprinklers that have orifices larger than K-28. These sprinklers will need to be manufactured in increments that represent a 100 percent increase in flow compared to a sprinkler with a nominal K-factor of 5.6. This requirement is an effort by the technical committee to encourage new technology while at the same time addressing the need for interchangeability between product lines. Specifying the K-factors that can be used by sprinklers in the future removes the possibility of the manufacture of odd sprinkler sizes that would present replacement problems.

7.2.2.4 Residential Sprinklers. Residential sprinklers shall be permitted with K-factors other than those specified in Table 7.2.2.1.

Residential sprinklers are intended for specific life safety objectives in certain building occupancies, so these sprinklers are not subject to the K-factor range limitation specified in Table 7.2.2.1, as stated in 7.2.2.4.

7.2.2.5 CMSA and ESFR K-Factors. Control mode specific application (CMSA) and early suppression fast-response (ESFR) sprinklers shall have a minimum nominal K-factor of K-11.2 (160).

Paragraph 7.2.2.5 specifies a minimum nominal K-factor for control mode specific application (CMSA) and early suppression fast response (ESFR) sprinklers. This requirement establishes a degree of consistency with regard to CMSA and ESFR sprinkler performance objectives that are used to provide protection for storage.

7.2.2.6 ESFR K-Factor. ESFR sprinkler K-factor shall be selected as appropriate for the hazard. *(See Chapter 20.)*

The reference to Chapter 20 in 7.2.2.6 alludes to the fact that there are a variety of ESFR sprinklers and that they are not all intended to protect against the same types of hazards. Obviously, the application of an ESFR sprinkler beyond the limitations of its listing is likely to result in inadequate protection.

7.2.3 Occupancy Limitations. Unless the requirements of 7.2.3.1 or 7.2.3.2 are met, sprinklers shall not be listed for protection of a portion of an occupancy classification.

7.2.3.1 Residential Sprinklers. Residential sprinklers shall be permitted to be listed for portions of residential occupancies as defined in 12.1.1.

7.2.3.2 Special Sprinklers. Special sprinklers shall be permitted to be listed for protection of a specific construction feature in a portion of an occupancy classification. *(See Section 15.2.)*

NFPA 13 encourages the development of new technologies and allows for a sufficient degree of flexibility for the pursuit of new products. However, a balance must be achieved between flexibility and practicality. The requirements of 7.2.3, 7.2.3.1, and 7.2.3.2 attempt to define this balance. The intent of the requirements is to minimize unnecessary complexities by limiting the development of devices that are extremely narrow in their application.

7.2.4* Temperature Characteristics.

A.7.2.4 Information regarding the highest temperature that can be encountered in any location in a particular installation can be obtained by use of a thermometer that will register the highest temperature encountered; it should be hung for several days in the location in question, with the plant in operation.

FAQ [7.2.3]

Can a sprinkler be listed to protect a specific portion of an occupancy classification?

Subsection 7.2.3 requires that a sprinkler be listed and usable for all hazards addressed by an occupancy classification, such as light hazard occupancies. For instance, a sprinkler cannot be listed for the protection of only hospitals or offices but must instead be listed for all types of light hazard occupancies.

There are sprinklers that are marketed for specific locations within an occupancy such as a corridor. Such devices are not listed for use in a corridor but their discharge pattern is such that they can provide an installation for specific locations. They can be used in any room within the occupancy that complies with their discharge pattern.

SEE ALSO

3.3.205.4.5 and its associated commentary and exhibits for more details about ESFR sprinklers.

FAQ [7.2.3.2]

Can residential sprinklers be used throughout all light hazard occupancies?

Paragraph 7.2.3.1 acknowledges that residential sprinklers are developed specifically for life safety purposes in dwelling units and their adjoining corridors. Residential sprinklers cannot be used in other light hazard occupancies, a limitation that has always been associated with their listing.

The purpose of 7.2.3.2 is to allow for the development and use of sprinklers that address specific hazards or construction features, such as for the protection of attics, interstitial combustible concealed spaces, and windows, when used in accordance with the listing limitations. See Chapter 15 for information on special sprinklers.

EDUFIRE.IR

The temperature rating of a sprinkler plays a critical role in achieving fire control or suppression. The selection criteria for the temperature rating of a given sprinkler are a function of the occupancy classification and ambient ceiling temperatures expected in the vicinity of the sprinkler. Determination of the highest ambient ceiling temperatures influences the selection of the proper sprinkler temperature rating and minimizes the chance of a non-fire sprinkler operation, which is typically an extremely rare event.

SEE ALSO

9.4.2 for guidance on specific locations that would necessitate the installation of sprinklers with intermediate- or high-temperature ratings.

7.2.4.1 Automatic sprinklers shall have their frame arms, deflector, coating material, or liquid bulb colored in accordance with the requirements of Table 7.2.4.1 or the requirements of 7.2.4.2, 7.2.4.3, 7.2.4.4, or 7.2.4.5.

Sprinklers are color coded to provide a ready means of identifying the temperature classifications of their operating elements. Table 7.2.4.1 indicates the temperature ratings for sprinklers in each classification and the maximum ceiling temperatures for which each classification is allowed to be installed.

TABLE 7.2.4.1 *Temperature Ratings, Classifications, and Color Codings*

Maximum Ceiling Temperature		*Temperature Rating*		*Temperature Classification*	*Color Code*	*Glass Bulb Colors*
°F	*°C*	*°F*	*°C*			
100	38	135–170	57–77	Ordinary	Uncolored or black	Orange or red
150	66	175–225	79–107	Intermediate	White	Yellow or green
225	107	250–300	121–149	High	Blue	Blue
300	149	325–375	163–191	Extra high	Red	Purple
375	191	400–475	204–246	Very extra high	Green	Black
475	246	500–575	260–302	Ultra high	Orange	Black
625	329	650	343	Ultra high	Orange	Black

7.2.4.2 A dot on the top of the deflector, the color of the coating material, or colored frame arms shall be permitted for color identification of corrosion-resistant sprinklers.

7.2.4.3 Color identification shall not be required for ornamental sprinklers such as factory-plated or factory-painted sprinklers or for recessed, flush, or concealed sprinklers.

NFPA 13 includes special rules for color-coding identification of sprinklers to accommodate the decorative or corrosion-resistant finish applied to some sprinklers as listed by the certification and testing laboratories. The traditional color codes are not applicable to specially coated sprinklers, such as decorative or ornamental sprinklers. In some cases, in order to receive a particular color finish, these devices are listed as corrosion-resistant sprinklers.

EXHIBIT 7.7 *Glass Bulb Sprinkler with Frame Painted by the Manufacturer. (Courtesy of American Fire Sprinkler Association)*

7.2.4.4 The frame arms of bulb-type sprinklers shall not be required to be color coded.

7.2.4.5 The liquid in bulb-type sprinklers shall be color coded in accordance with Table 7.2.4.1.

Many glass bulb sprinklers, such as the one shown in Exhibit 7.7, have coated frame arms for aesthetic reasons. To avoid confusion in identifying the temperature rating characteristics of glass bulb sprinklers, the liquid in the glass bulb is required to have a unique color for specific temperature characteristics.

The temperature rating of glass bulb sprinklers is identified by the unique color of the encased liquid, which readily expands when heated. The expanding liquid can consist of a number of specific compounds developed by the manufacturer to achieve different nominal opening temperatures. The manufacturer will likely consider the liquid formula as proprietary information. The liquids used could contain toluene, xylene, n-decane, cyclohexane, trichloroethylene, tetrachloroethylene, ethyl acetoacetate, acetone, methyl ethyl ketone, methanol, ethanol, isopropanol, glycerol or ethyl acetate, or mixtures thereof. The temperature

EDUFIRE.IR

rating of this type of element is controlled by the size of a small air bubble that is trapped in the glass tube of the device. As the liquid within the bulb is heated, the liquid expands and the bubble disappears, leaving no further room for the liquid to expand. At that point, the liquid exerts a large force on the circumference of the bulb, resulting in fracture of the bulb and operation of the sprinkler. The size of the bubble and the expansion rate of the liquid establish the operating temperature of the sprinkler.

A glass bulb sprinkler with a white frame arm finish but a red bulb, for example, is rated as ordinary temperature, according to Table 7.2.4.1.

SEE ALSO

9.4.2 for details on the use of sprinklers with differing temperature ratings, depending on the environment.

7.2.5 Special Coatings.

7.2.5.1* Corrosion Resistant.

A.7.2.5.1 Examples of such locations include the following:

(1) Paper mills
(2) Packing houses
(3) Tanneries
(4) Alkali plants
(5) Organic fertilizer plants
(6) Foundries
(7) Forge shops
(8) Fumigation, pickle, and vinegar works
(9) Stables
(10) Storage battery rooms
(11) Electroplating rooms
(12) Galvanizing rooms
(13) Steam rooms of all descriptions, including moist vapor dry kilns
(14) Salt storage rooms
(15) Locomotive sheds or houses
(16) Driveways
(17) Areas exposed to outside weather, such as piers and wharves exposed to salt air
(18) Areas under sidewalks
(19) Areas around bleaching equipment in flour mills
(20) All portions of cold storage buildings where a direct ammonia expansion system is used
(21) Portions of any plant where corrosive vapors prevail
(22) Area over and around swimming pools, chlorine storage rooms, and pool pump rooms

7.2.5.2* Painting. Sprinklers shall only be painted by the sprinkler manufacturer.

A.7.2.5.2 Painting of sprinklers can retard the thermal response of the heat-responsive element, can interfere with the free movement of parts, and can render the sprinkler inoperative. Moreover, painting can invite the application of subsequent coatings, thus increasing the possibility of a malfunction of the sprinkler.

Sprinklers in textile mills, for example, are subject to loading by lint-type materials, which are by-products of the cloth manufacturing process. Another example is sprinklers at the bottom of elevator shafts and underneath escalators, because they are subject to loading from hydraulic oils and lubricants. Any sprinkler subject to loading of materials that cannot be readily vacuumed or blown away with compressed air without touching the sprinkler must be replaced. These are two examples of events that occur after the system is in service but are included here for consideration when an existing system is to be modified.

Sprinklers that have been painted in the field, however slight (including overspray, as shown in Exhibit 7.8), must not be cleaned of paint and reused. Instead, they must be replaced with new sprinklers. Attempting to remove the paint from a sprinkler by scraping or by use of chemical paint removers could cause unseen damage that could adversely affect the operation of the sprinkler.

FAQ [A.7.2.5.2]

What is loading, as it relates to sprinklers?

Loading of a sprinkler occurs when there is a buildup of foreign material on the sprinkler that acts to delay or prevent proper sprinkler activation. Examples of loading include the dust that accumulates on a sprinkler near an HVAC diffuser or the buildup of rubber particles on a sprinkler in a tire manufacturing plant.

SEE ALSO

Chapter 5 of NFPA 25 for more information on loading of sprinklers.

EDUFIRE.IR

EXHIBIT 7.8 Sprinkler Subjected to Paint Overspray.

7.2.5.3 Ornamental Finishes.

Decorative coatings for ornamentation and other markings are allowed to be applied only by the manufacturer and in accordance with the sprinkler's listing. This restriction also applies to the cover plate assembly of a listed concealed sprinkler. Many sprinkler manufacturers will custom paint the cover plate to match the surrounding area or even apply a wood grain pattern for aesthetic appeal.

7.2.5.3.1 Ornamental finishes shall only be applied to sprinklers and, if applicable, their concealed cover plates, by the sprinkler manufacturer.

7.2.5.3.2 Sprinklers with ornamental finishes where utilized shall be specifically listed.

7.2.6 Escutcheons and Cover Plates.

7.2.6.1 Plates, escutcheons, or other devices used to cover the annular space around a sprinkler shall be metallic or shall be listed for use around a sprinkler.

Nonmetallic plates or escutcheons used to cover the annular space around a sprinkler can deform or melt and impair the operation or discharge characteristics of the sprinkler.

7.2.6.2* Escutcheons used with recessed, flush-type, or concealed sprinklers shall be part of a listed sprinkler assembly.

A.7.2.6.2 The use of the wrong type of escutcheon with recessed or flush-type sprinklers can result in severe disruption of the spray pattern, which can destroy the effectiveness of the sprinkler.

Components for escutcheon plates, including cover plates, if used, are integral to proper sprinkler performance. The listing of these components ensures that the sprinkler, escutcheon, and cover plate combination will operate as intended and not adversely impact the discharge pattern of the sprinkler. Paragraph 7.2.6.2 requires that the concealed cover plates be listed only with specific sprinkler models. The cover plates are marked with the compatible sprinkler model or sprinkler identification number.

Exhibit 7.9 illustrates a concealed sprinkler with the escutcheon plate and the cover plate missing. Although the missing cover plate will not impair sprinkler performance, the lack of the escutcheon (sprinkler cup) can impair performance, because the concealed sprinkler is listed for use with an escutcheon.

EDUFIRE.IR

If the cover plate is missing, the possibility exists that the concealed sprinkler and cup are not installed at the required elevation with the ceiling to achieve proper water distribution. In some cases, improperly installed concealed sprinklers have discharged above the ceiling, preventing water from reaching the fire.

Instances have occurred in which the dimensions of a recessed escutcheon that was not investigated or listed with a sprinkler were such that the deflector was not clear of the escutcheon, which seriously impaired the spray pattern. Failure to follow all manufacturer's instructions and listing criteria can result in less than acceptable performance of the sprinkler.

7.2.6.3 Cover plates used with concealed sprinklers shall be part of the listed sprinkler assembly.

EXHIBIT 7.9 *Improperly Installed Concealed Sprinkler.*

7.3 Aboveground Pipe and Tube.

The use of new pipe materials and the development of new methods for installing and joining pipe continue to grow. Section 7.3 provides details on the applications of various pipe materials used in aboveground applications. NFPA 13 currently allows for various types of steel, copper, and nonmetallic pipe to be used.

ASK THE AHJ

Can plastic pipe be used only in low-rise residential fire sprinkler systems per NFPA 13R and in one- and two-family dwellings per NFPA 13D?

No. Plastic pipe specifically listed for use in fire sprinkler systems is allowed to be used with all three NFPA sprinkler standards. However, there are limitations within NFPA 13 on where and how plastic pipe can be used. See the commentary following 7.3.2

FAQ [7.3.1.1]

What are some of the factors to consider when determining the proper material selection for sprinkler piping?

The selection of a particular pipe material is often based on the environmental conditions of the space in which the pipe is installed. For example, some industrial environments could require a corrosion-resistant pipe material. The desire to achieve a certain aesthetic appearance could also influence material selection. For instance, when piping is installed exposed, copper tubing could be used to blend with the architectural features.

7.3.1 General.

7.3.1.1 Pipe or tube shall meet or exceed one of the standards in Table 7.3.1.1 or be in accordance with 7.3.3.

Paragraph 7.3.1.1 permits the use of steel and brass pipe and copper tube materials made to standards other than those identified in Table 7.3.1.1, provided the requirements of any other piping standard meet or exceed the requirements of those standards specified in Table 7.3.1.1. Additionally, NFPA 13 permits the use of other types of piping materials not specifically identified, provided they are listed for fire protection service.

TABLE 7.3.1.1 *Pipe or Tube Materials and Dimensions*

Materials and Dimensions	*Standard*
Ferrous Piping (Welded and Seamless)	
Standard Specification for Black and Hot-Dipped Zinc-Coated (Galvanized) Welded and Seamless Steel Pipe for Fire Protection Use	ASTM A795/A795M
Standard Specification for Pipe, Steel, Black and Hot-Dipped, Zinc-Coated, Welded and Seamless	ASTM A53/A53M
Welded and Seamless Wrought Steel Pipe	ASME B36.10M
Standard Specification for Electric-Resistance-Welded Steel Pipe	ASTM A135/A135M

(*Continues*)

EDUFIRE.IR

TABLE 7.3.1.1 (*Continued*)

Materials and Dimensions	*Standard*
Copper Tube (Drawn, Seamless)	
Standard Specification for Seamless Copper Tube	ASTM B75/B75M
Standard Specification for Seamless Copper Water Tube	ASTM B88
Standard Specification for General Requirements for Wrought Seamless Copper and Copper-Alloy Tube	ASTM B251
Standard Specification for Liquid and Paste Fluxes for Soldering of Copper and Copper Alloy Tube	ASTM B813
Specification for Filler Metals for Brazing and Braze Welding	AWS A5.8M/A5.8
Standard Specification for Solder Metal, Section 1: Solder Alloys Containing Less Than 0.2% Lead and Having Solidus Temperatures Greater than 400°F	ASTM B32
Alloy Materials	ASTM B446
CPVC	
Standard Specification for Chlorinated Poly(Vinyl Chloride) (CPVC) Plastic Pipe (SDR-PR)	ASTM F442/F442M
Brass Pipe	
Standard Specification for Seamless Red Brass Pipe, Standard Sizes	ASTM B43
Stainless Steel	
Standard Specification for Seamless, Welded, and Heavily Cold Worked Austenitic Stainless Steel Pipes	ASTM A312/A312M

7.3.2* Nonmetallic Pipe and Tubing.

A.7.3.2 CPVC is a plastic material, and consideration is necessary when other materials or chemicals come in contact with CPVC that can cause degradation of performance of the pipe due to interaction of materials. Other construction materials include but are not limited to materials used in fabrication of the sprinkler system, additives to water supplies, cable, and wiring, and certain insecticides and fungicides. Compliance with 7.3.2 combined with following the manufacturer's guidance on installation and compatible materials will help prevent premature performance degradation of non-metallic piping. Mechanical stress caused by hanging methods or bending on non-metallic piping beyond the manufacturers recommended limitations can cause stress failure over time and should be avoided.

Other types of pipe and tube that have been investigated and listed for sprinkler applications include thermoplastic pipe and fittings. While these products can offer advantages, such as ease of handling and installation, cost-effectiveness, reduction of friction losses, and improved corrosion resistance, it is important to recognize that they also have limitations that are to be considered by those contemplating their use or acceptance.

With respect to thermoplastic pipe and fittings, exposure of such piping to elevated temperatures in excess of that for which it has been listed can result in distortion or failure. Accordingly, care must be exercised when locating such systems to ensure that the ambient temperature, including seasonal variations, does not exceed the rated value.

The upper service temperature limit of currently listed CPVC sprinkler pipe is 150°F (65.5°C) at 175 psi (12.1 bar).

Not all pipe or tube made to ASTM F442, *Standard Specification for Chlorinated Poly (Vinyl Chloride) (CPVC) Plastic Pipe (SDR-PR)*, is listed for fire sprinkler service. Listed pipe is identified by the logo of the listing agency.

Not all fittings made to ASTM F437, *Standard Specification for Threaded Chlorinated Poly (Vinyl Chloride) (CPVC) Plastic Pipe Fittings, Schedule 80*, ASTM F438, *Standard Specification for Socket-Type Chlorinated Poly (Vinyl Chloride) (CPVC) Plastic Pipe Fittings, Schedule 40*, and ASTM F439, *Standard Specification for Socket-Type Chlorinated*

EDUFIRE.IR

Poly (Vinyl Chloride) (CPVC) Plastic Pipe Fittings, Schedule 80, as described in 7.4.4, are listed for fire sprinkler service. Listed fittings are identified by the logo of the listing agency.

Consideration must also be given to the possibility of exposure of the piping to elevated temperatures during a fire. The survival of thermoplastic piping under fire conditions is primarily due to the cooling effect of the discharge from the sprinklers it serves. As this discharge might not occur simultaneously with the rise in ambient temperature and, under some circumstances, can be delayed for periods beyond the tolerance of the piping, protection in the form of a fire-resistant membrane is generally required. (Some listings do provide for the use of exposed piping in conjunction with residential or quick-response sprinklers, but only under specific, limited installation criteria.)

Where protection is required, it is described in the listing information for each individual product, and the requirements given must be followed. It is equally important that such protection must be maintained. Removal of, for example, one or more panels in a lay-in ceiling can expose piping in the concealed space to the possibility of failure in the event of a fire. Similarly, the relocation of openings through protective ceilings that expose the pipe to heat, inconsistent with the listing, would place the system in jeopardy. The potential for loss of the protective membrane under earthquake conditions should also be considered.

While the listings of thermoplastic piping do not prohibit its installation in combustible concealed spaces where the provision of sprinkler protection is not required, and while the statistical record of fire originating in such spaces is low, it should be recognized that the occurrence of a fire in such a space could result in failure of the piping system. The investigation of pipe and tube other than described in Table 7.3.1.1 should involve consideration of many factors, including the following:

(1) Pressure rating
(2) Beam strength (hangers)
(3) Unsupported vertical stability
(4) Movement during sprinkler operation (affecting water distribution)
(5) Corrosion (internal and external), chemical and electrolytic
(6) Resistance to failure when exposed to elevated temperatures
(7) Methods of joining (strength, permanence, fire hazard)
(8) Physical characteristics related to integrity during earthquakes

7.3.2.1 Nonmetallic pipe in accordance with Table 7.3.1.1 shall be investigated for suitability in automatic sprinkler installations and listed for this service.

7.3.2.1.1 Other types of nonmetallic pipe or tube investigated for suitability in automatic sprinkler installations and listed for this service, including but not limited to CPVC, and differing from that provided in Table 7.3.1.1 shall be permitted where installed in accordance with their listing limitations.

7.3.2.1.2 Manufacturer's installation instructions shall include its listing limitations.

7.3.2.2 Nonmetallic pipe shall not be listed for portions of an occupancy classification.

7.3.3* Listed Metallic Pipe and Tubing.

NFPA does not limit aboveground sprinkler system piping materials to the steel, brass, and copper materials identified in Table 7.3.1.1. However, any other materials must be listed for use in sprinkler systems. Subsection 7.3.3 encourages development of other materials that offer cost or performance advantages. Historically, the development of new products and methods, such as threadable light wall steel pipe, copper tubing, and nonmetallic pipe, has occurred through the application of 7.3.3.

EDUFIRE.IR

Although not shown in Table 7.3.1.1, some light wall steel pipe is listed for fire protection service, and its use is governed by Section 7.3 as well. Light wall steel pipe is tested for its ability to provide performance characteristics similar to those of Schedule 40 steel pipe. These piping materials might be advantageous from a hydraulics standpoint, since they have a larger interior diameter than other steel pipe materials. In addition, their weight is considerably less than that of Schedule 40 pipe, and their joining methods require less overall effort.

A.7.3.3 Other types of pipe and tube that have been investigated and listed for sprinkler applications include lightweight steel pipe. While these products can offer advantages, such as ease of handling and installation, cost effectiveness, and reduction of friction losses, it is important to recognize that they also have limitations that are to be considered by those contemplating their use or acceptance.

Corrosion studies have shown that, in comparison to Schedule 40 pipe, the effective life of lightweight steel pipe can be reduced, the level of reduction being related to its wall thickness. Further information with respect to corrosion resistance is contained in the individual listings for such pipe.

7.3.3.1 Other types of pipe or tube investigated for suitability in automatic sprinkler installations and listed for this service, including steel, and differing from that provided in Table 7.3.1.1 shall be permitted where installed in accordance with their listing limitations, including installation instructions.

7.3.3.2 Pipe or tube shall not be listed for portions of an occupancy classification.

7.3.4 Pipe and Tube Identification.

All pipe used for sprinkler systems, not just pipe that is listed for use in sprinkler systems, must be marked to identify the type of pipe on sections exceeding 2 ft (600 mm) in length. Not all pipe made to a particular manufacturing standard is listed. Listed piping is identified by the unique marking of the listing agency. One example of this identification is shown in Exhibit 7.10. In this case, the mark is clearly visible on the pipe. Exhibit 7.10 illustrates a piece of chlorinated poly(vinyl chloride) (CPVC) fire sprinkler system pipe. Because nonmetallic piping that is not listed might be manufactured without the assurance of its compliance with the applicable specification, it must not be used in sprinkler systems.

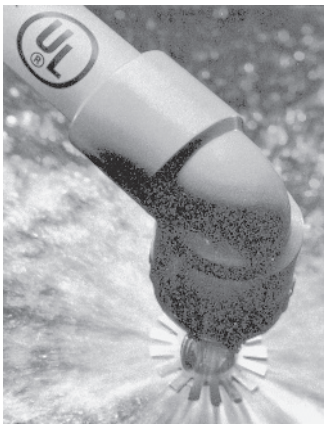

EXHIBIT 7.10 Example of Plastic Pipe Showing the Marking of the Listing Agency.

The variety of piping materials with varying wall thicknesses available to the sprinkler industry offers many benefits. Without the labeling requirements of 7.3.4.2 and 7.3.4.3, identification of pipe in the field during installation, system acceptance, and servicing would, in many instances, be extremely difficult.

The identification of some pipe materials is more obvious than others. For example, listed CPVC sprinkler pipe, which has a characteristic orange color, and copper tube are easy to identify because of their color and appearance. The color schemes, however, need to be supplemented by the marking requirements established by 7.3.4.1.

Since some systems require decorative painting, painting to identify the system, or painting for corrosion resistance, the pipe identification marking can be covered after it has been approved by the authority having jurisdiction.

7.3.4.1* All pipe shall be marked along its length by the manufacturer in such a way as to properly identify the type of pipe.

A.7.3.4.1 Where approved, the pipe identification can be covered with paint or other protective coatings before installation.

7.3.4.2 The marking shall be visible on every piece of pipe over 2 ft (600 mm) long.

7.3.4.3 Pipe identification shall include the manufacturer's name, model designation, or schedule.

EDUFIRE.IR

7.4 Fittings.

7.4.1 Fittings used in sprinkler systems shall meet or exceed the standards in Table 7.4.1 or be in accordance with 7.4.2 or 7.4.4.

TABLE 7.4.1 *Fittings Materials and Dimensions*

Materials and Dimensions	*Standard*
Cast Iron	
Gray Iron Threaded Fittings, Classes 125 and 250	ASME B16.4
Gray Iron Pipe Flanges and Flanged Fittings, Classes 25, 125, and 250	ASME B16.1
Malleable Iron	
Malleable Iron Threaded Fittings, Classes 150 and 300	ASME B16.3
Steel	
Factory-Made Wrought Buttwelding Fittings	ASME B16.9
Buttwelding Ends	ASME B16.25
Standard Specification for Piping Fittings of Wrought Carbon Steel and Alloy Steel for Moderate and High Temperature Service	ASTM A234/A234M
Pipe Flanges and Flanged Fittings, NPS ½ through NPS 24 Metric/Inch Standard	ASME B16.5
Forged Fittings, Socket-Welding and Threaded	ASME B16.11
Copper	
Wrought Copper and Copper Alloy Solder Joint Pressure Fittings	ASME B16.22
Cast Copper Alloy Solder Joint Pressure Fittings	ASME B16.18
CPVC	
Standard Specification for Threaded Chlorinated Poly(Vinyl Chloride) (CPVC) Plastic Pipe Fittings, Schedule 80	ASTM F437
Standard Specification for Socket-Type Chlorinated Poly(Vinyl Chloride) (CPVC) Plastic Pipe Fittings, Schedule 40	ASTM F438
Standard Specification for Chlorinated Poly(Vinyl Chloride) (CPVC) Plastic Pipe Fittings, Schedule 80	ASTM F439
Bronze Fittings	
Cast Copper Alloy Threaded Fittings, Classes 125 and 250	ASME B16.15
Stainless Steel	
Standard Specification for Wrought Austenitic Stainless Steel Piping Fittings	ASTM A403/A403M

Subsection 7.4.1 specifies the types of fittings permitted to be used in sprinkler systems. The fittings must be of the types and materials indicated in Table 7.4.1 and must be manufactured to the standards identified in the table or to other standards that meet or exceed the requirements of the standards in the table. Additionally, 7.4.4 permits the use of specially listed fittings.

The fittings specified in Table 7.4.1 are compatible with and are intended for use with the piping materials listed in Table 7.3.1.1. If specially listed materials are used, then specially listed fittings complying with 7.4.3 should be used.

7.4.2 In addition to the standards in Table 7.4.1, nonmetallic fittings shall also be in accordance with 7.4.4.

EDUFIRE.IR

7.4.3 Nonmetallic Fittings. Nonmetallic fittings in accordance with Table 7.4.1 shall be investigated for suitability in automatic sprinkler installations and listed for this service. Listed nonmetallic fittings shall be installed in accordance with their listing limitations, including installation instructions.

7.4.4* Other types of fittings investigated for suitability in automatic sprinkler installations and listed for this service, including but not limited to CPVC and steel, and differing from that provided in Table 7.4.1 shall be permitted when installed in accordance with their listing limitations, including installation instructions.

A.7.4.4 Rubber-gasketed pipe fittings and couplings should not be installed where ambient temperatures can be expected to exceed 150°F (66°C) unless listed for this service. If the manufacturer further limits a given gasket compound, those recommendations should be followed.

Other construction materials include but are not limited to materials used in fabrication of the sprinkler system, additives to water supplies, cable and wiring, and certain insecticides and fungicides.

Paragraph A.7.4.4, 16.3.9.1, and 7.3.3 all permit alternative types of listed pipe and tubing. Innovations in the technology of new fittings can be linked to new piping materials. According to 7.4.4, any new fitting listed for use in a sprinkler system is permitted by NFPA 13. However, the intent of this requirement is not that any listed fitting can be used with any listed pipe. The user must reference the listing information to determine that the pipe and the fitting are listed as compatible.

For example, one listed fitting is the specially designed "press fit," which can be used on certain types of specially listed thin-wall steel pipe. The press fit is not to be used with nonmetallic piping materials. Exhibit 7.11 illustrates a special press fit tool.

EXHIBIT 7.11 Press Fit Tool. (Courtesy of Victaulic®)

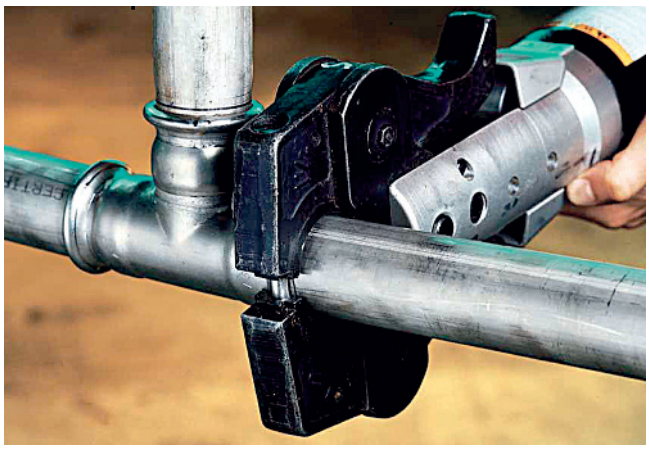

FAQ [7.5.1.1]

Why is joint compound or tape intended to be applied only to the male threads?

Joint compound and tape are both useful in preventing leaks in threaded joints. However, if they are applied to a fitting rather than to a male thread, the compound or tape forms a ridge inside the pipe where the joint is made. The ridge reduces the inside diameter of the pipe and, thereby, obstructs water flow. The operation of systems other than wet systems involves a high-velocity flow when the valve trips. The impact of the water tends to break off pieces of joint compound and carry them in a mass to the opened sprinklers where they can obstruct the orifices. In addition, the introduction of significant quantities of joint compound into the inlet of a sprinkler can adversely affect the sprinkler's operating and flow characteristics.

7.5 Joining of Pipe and Fittings.

7.5.1 Threaded Pipe and Fittings.

7.5.1.1 All threaded pipe and fittings shall have threads cut to ASME B1.20.1, *Pipe Threads, General Purpose (Inch)*.

Poor workmanship can result in threads that allow pipe protrusions to partially obstruct fitting openings. If such joints are used, they can seriously restrict system flow and greatly increase the pressure lost to friction, thereby impairing system operation.

EDUFIRE.IR

7.5.1.2* Steel pipe with wall thicknesses less than Schedule 30 [in sizes 8 in. (200 mm) and larger] or Schedule 40 [in sizes less than 8 in. (200 mm)] shall only be permitted to be joined by threaded fittings where the threaded assembly is investigated for suitability in automatic sprinkler installations and listed for this service.

A.7.5.1.2 Some steel piping material having lesser wall thickness than specified in 7.5.1.2 has been listed for use in sprinkler systems where joined with threaded connections. The service life of such products can be significantly less than that of Schedule 40 steel pipe, and it should be determined if this service life will be sufficient for the application intended.

All such threads should be checked by the installer using working ring gauges conforming to the "Basic Dimensions of Ring Gauges for USA (American) Standard Taper Pipe Threads, NPT," as per Table 8 of ASME B1.20.1, *Pipe Threads, General Purpose (Inch)*.

FAQ [A.7.5.1.2]

How are the expected service lives of different pipe schedules compared?

To address the service life of listed thin-wall pipe, part of its listing evaluation includes an examination of its corrosion resistance ratio (CRR) with respect to Schedule 40 steel pipe. The CRR is the ratio of the pipe wall thickness of the thinnest wall cross section (usually the first exposed thread for threaded pipe) for the listed pipe to Schedule 40 pipe measured at the same location. The CRR is calculated assuming that the environmental exposures are the same for both pipes and that the pipe will be perforated at the thinnest section by pit-type corrosion.

For example, a CRR of 0.21 indicates an anticipated service life of 21 percent, approximately one-fifth that of Schedule 40 pipe, when installed in wet systems in stable internal and external environmental conditions. These evaluation results are available in the listing information for a given product.

7.5.2 Welded Pipe and Fittings.

7.5.2.1 General.

Welding of any sprinkler piping is subject to strict quality control procedures. Failure to adhere to the procedures outlined in 7.5.2 can result in an unsuccessful acceptance of the system. Although pipe welding can result in an excellent system installation, it requires special skills on the part of a qualified welder.

7.5.2.1.1 Welding shall be permitted as a means of joining sprinkler piping in accordance with 7.5.2.2 through 7.5.2.6.

7.5.2.2* Fabrication.

A.7.5.2.2 Cutting and welding operations account for 4 percent of fires each year in nonresidential properties and 8 percent in industrial and manufacturing properties. In-place welding of sprinkler piping introduces a significant hazard that can normally be avoided by shop-welding the piping and installing the welded sections with mechanical fittings. As a result, the standard requires that all piping be shop-welded. When such situations cannot be avoided, the exceptions outline procedures and practices that minimize the increase in hazard.

Because the welding process introduces a potential ignition source and the welding procedure is likely to occur when the sprinkler system is impaired, 7.5.2.2.1 requires shop-welding of all system piping unless certain conditions are met. If the provisions of NFPA 51B, *Standard for Fire Prevention During Welding, Cutting, and Other Hot Work,* are followed, the welding process can be expected to be safely accomplished in new installations. Since other mechanical system piping can be welded in place, it is logical to expect that sprinkler pipe can also be welded in place. Prior restrictions concerning welding of pipe in place were based on the occurrence of fires as a result of the welding process. NFPA 51B contains a number of precautions that, when followed, reduce or eliminate the ignition hazard.

7.5.2.2.1 When welding sprinkler pipe, the pipe shall be shop welded unless the requirements of 7.5.2.2 or 7.5.2.3 are met.

7.5.2.2.2 Where the design specifications require any part of the piping system to be welded in place, welding of sprinkler piping shall be permitted where the welding process is performed in accordance with NFPA 51B and the mechanical fittings required by 16.9.11.5 and Section 16.6 are provided.

7.5.2.2.3 Tabs for longitudinal earthquake bracing shall be permitted to be welded to in-place piping where the welding process is performed in accordance with NFPA 51B.

Welding the tabs onto pipe for longitudinal earthquake bracing is permitted, since it is difficult to accomplish before installation due to alignment of the pipe and the sway brace.

EDUFIRE.IR

7.5.2.2.4 Welding shall not be performed where there is impingement of rain, snow, sleet, or high wind on the weld area of the pipe product.

Welding must not be performed under conditions that introduce a hazard to the welder. Furthermore, welding performed in adverse conditions such as wind, rain, and moisture contacting the weld area of the pipe might not allow proper heat penetration of the weld and will result in a structurally weak product.

7.5.2.2.5 Torch cutting and welding shall not be permitted as a means of modifying or repairing sprinkler systems.

Torch cutting and welding are restricted to new installations and only under those conditions specified by 7.5.2.2. These restrictions reduce the possible introduction of ignition sources when the sprinkler system is impaired.

7.5.2.3 Fittings.

A listed fabricated fitting does not penetrate the waterway of the main pipe, and, if the fitting has an inside diameter less than Schedule 40 pipe, the fitting will have an equivalent length value as part of the listing that identifies its hydraulic characteristics. The use of listed fabricated fittings also serves to increase overall system reliability.

7.5.2.3.1* Welded fittings used to join pipe shall be listed fabricated fittings or manufactured in accordance with Table 7.4.1.

A.7.5.2.3.1 Listed, shaped, and contoured nipples meet the definition of fabricated fittings.

7.5.2.3.2 Fittings referenced in 7.5.2.3.1 shall be joined in conformance with a qualified welding procedure as set forth in this section and shall be an acceptable product under this standard, provided that materials and wall thickness are compatible with other sections of this standard.

7.5.2.3.3 Fittings shall not be required where pipe ends are buttwelded in accordance with the requirements of 7.5.2.4.3.

7.5.2.3.4 When the pipe size in a run of piping is reduced, a reducing fitting designed for that purpose shall be used in accordance with the requirements of 7.5.2.3.1.

7.5.2.4 Welding Requirements.

7.5.2.4.1 Welds between pipe and welding outlet fittings shall be permitted to be attached by full penetration welds, partial penetration groove welds, or fillet welds.

A.7.5.2.4.1 Partial penetration welds on outlet fitting connections are considered adequate, since there is no significant load on the joint other than that caused by pressure internal to the pipe *(see Figure A.7.5.2.4.1)*.

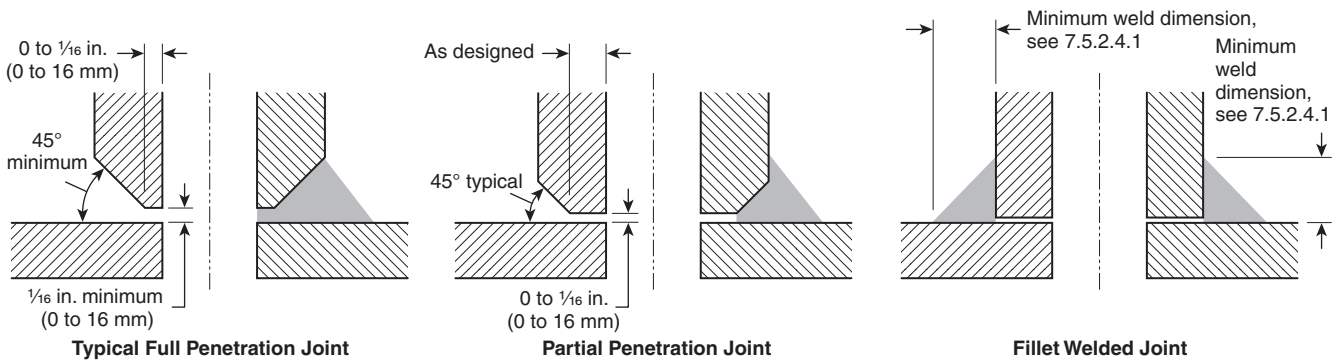

FIGURE A.7.5.2.4.1 *Weld Descriptions.*

EDUFIRE.IR

7.5.2.4.2* The minimum throat thickness shall be not less than the thickness of the pipe, the thickness of the welding fitting, or 3⁄16 in. (5 mm), whichever is least.

A.7.5.2.4.2 The load due to the internal pressure can be accommodated with a weld that has a conservative weld throat thickness that can be calculated as follows:

$$\text{Weld throat thickness (in.)} = PD \times 0.000035 \qquad \textbf{[A.7.5.2.4.2]}$$

where:

P = rated system gauge pressure (psi)
D = outside diameter (OD) of fitting (in.)

For example, if you assume a gauge pressure of 300 psi (21 bar) and the OD of the outlet fitting of 3 in. (75 mm), the result of the thickness calculation is 0.0315 in. (0.8 mm). When compared to the minimum throat thickness of **3⁄16** in. (5 mm), there is a factor of more than 5 times the calculated thickness value.

Paragraph 7.5.2.4.1 specifies the permissible types and thicknesses of the welds when fittings are being attached. It is permissible to use fillet, partial penetration, and full penetration welds. The throat thickness of the welds is required to be the thickness of the piping or fitting material or 3/16 in. (5 mm), whichever is least. The minimum weld size specified in this paragraph and other paragraphs was developed using calculations and the minimum practical weld size that could consistently be fabricated. The example calculation for determining the minimum weld throat thickness is provided in A.7.5.2.4.2.

7.5.2.4.3* Circumferential butt joints shall be cut, beveled, and fit so that full penetration is achievable.

Butt welding two pieces of pipe using full penetration welds provides a very high strength joint. However, preparing the pipe by cutting, beveling, and fitting the pipe so full penetration welds can be made provides the opportunity to form a proper joint for sprinkler systems when partial penetration welds are performed.

A.7.5.2.4.3 The preparation of mating surfaces is important to the proper fabrication of a weld joint. To accomplish this, the mating surfaces for a circumferential weld butt joint should be prepared and configured so that a full penetration weld is achievable, but a partial penetration weld is acceptable. *(See Figure A.7.5.2.4.3.)*

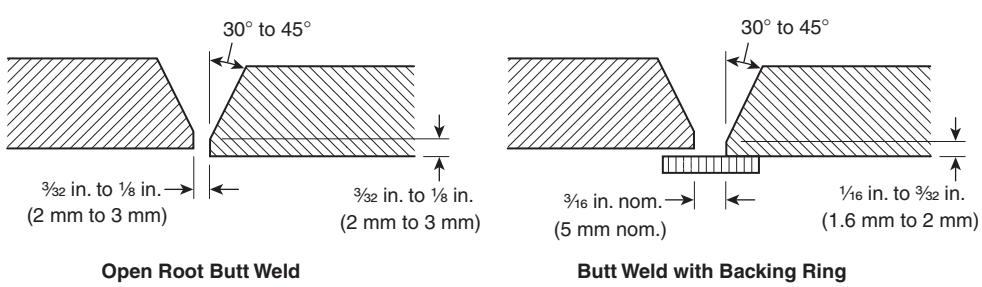

FIGURE A.7.5.2.4.3 *Weld Diagram.*

7.5.2.4.4 Full penetration welding shall not be required.

7.5.2.4.5 Where slip-on flanges are welded to pipe with a single fillet weld, the weld shall be on the hub side of the flange and the minimum throat weld thickness shall not be less than 1.25 times the pipe wall thickness or the hub thickness, whichever is less.

EDUFIRE.IR

7.5.2.4.6 Face welds on the internal face of the flange shall be permitted as a water seal in addition to the hub weld required in 7.5.2.4.5.

When flanges are being welded onto pipe, sufficient strength is achieved by welding the outside of the flange (hub end) to the pipe. A weld between the end of the pipe and the flange is permitted to seal the cavity between the flange and the pipe to reduce corrosive activity. The weld thickness is required to be at least 1.25 times the pipe or hub wall thickness, whichever is thinner.

7.5.2.4.7 Tabs for longitudinal earthquake bracing shall have minimum throat weld thickness not less than 1.25 times the pipe wall thickness and welded on both sides of the longest dimension.

7.5.2.4.8 When welding is performed, the following shall apply:

(1) Holes in piping for outlets shall be cut to the full inside diameter of fittings prior to welding in place of the fittings.
(2) Discs shall be retrieved.
(3) Openings cut into piping shall be smooth bore, and all internal slag and welding residue shall be removed.
(4) Fittings shall not penetrate the internal diameter of the piping.
(5) Steel plates shall not be welded to the ends of piping or fittings.
(6) Fittings shall not be modified.
(7) Nuts, clips, eye rods, angle brackets, or other fasteners shall not be welded to pipe or fittings, except as permitted in 7.5.2.2.3 and 7.5.2.4.7.
(8) Completed welds shall be free from cracks, incomplete fusion, surface porosity greater than 1/16 in. (1.6 mm) diameter, and undercut deeper than 25 percent of the wall thickness or 1/32 in. (0.8 mm), whichever is less.
(9) Completed circumferential butt weld reinforcement shall not exceed 3/32 in. (2 mm).

Field experience indicates the need to provide the minimum requirements for the quality of welded work. These requirements are specified in 7.5.2.4.8(1) through (9). When welded outlets are formed, concerns addressed by these requirements include the following:

1. The area of flow must not be restricted.
2. Holes should be cut in a manner that provides for disc retrieval to minimize obstructions in the waterway.
3. Rough edges cause turbulence, which increases friction loss, and welding residue could obstruct water flow through activated sprinklers.
4. Penetration beyond the internal diameter of the pipe restricts flow and causes turbulence.

Procedures listed in 7.5.2.4.8(4) through (7) represent poor welding practices for fire protection systems and are not permitted by NFPA 13. The disc retrieval specified in 7.5.2.4.8(2) is best ensured by attaching the disc to the piping at the point at which it was cut.

7.5.2.5 Qualifications.

7.5.2.5.1 A welding procedure shall be prepared and qualified by the contractor or fabricator before any welding is done.

7.5.2.5.2 Qualification of the welding procedure to be used and the performance of all welders and welding operators shall be required and shall meet or exceed the requirements of AWS B2.1/B2.1M, *Specification for Welding Procedure and Performance Qualification*; ASME *Boiler and Pressure Vessel Code*, Section IX, "Welding, Brazing, and Fusing Qualifications"; or other applicable qualification standard as required by the authority having jurisdiction, except as permitted by 7.5.2.5.3.

7.5.2.5.3 Successful procedure qualification of complete joint penetration groove welds shall qualify partial joint penetration (groove/fillet) welds and fillet welds in accordance with the provisions of this standard.

EDUFIRE.IR

7.5.2.5.4 Welding procedures qualified under standards recognized by previous editions of this standard shall be permitted to be continued in use.

7.5.2.5.5 Contractors or fabricators shall be responsible for all welding they produce.

Contractors or fabricators are directly responsible for qualifying procedures and welders, as well as for the quality of the welds performed by their employees.

7.5.2.5.6 Each contractor or fabricator shall have available to the authority having jurisdiction an established written quality assurance procedure ensuring compliance with the requirements of 7.5.2.4.

The requirements in 7.5.2.5.6 establish a level of qualification for welders, weld machine operators, and welding contractors. Welding contractors are expected to have a quality assurance procedure established and available for review by the authority having jurisdiction to verify that the welders are knowledgeable and capable of conducting the proper welds described in 7.5.2. The welding procedure is required to use either AWS B2.1/B2.1M, *Specification for Welding Procedure and Performance Qualification*, or other applicable local welding code requirements as a minimum standard. Exhibit 7.12 shows examples of both acceptable and substandard welding.

EXHIBIT 7.12 *Various Examples of Welding: (upper left) Acceptable Fillet Weld; (lower left) Another Acceptable Fillet Weld; and (right) Substandard Welding Practice Shown with Porosity, Slag, and Arc Strikes. (Courtesy of Sperko Engineering Services, Inc.)*

7.5.2.6 Records.

7.5.2.6.1 Welders or welding machine operators shall, upon completion of each welded pipe, place their identifiable mark or label onto each piece adjacent to a weld.

The identification mark or label serves to record welds completed by a specific welder. The mark or label allows quality control problems or defective materials to be easily traced if a problem with the weld occurs. It is permissible to mark or label each pipe welded, rather than to mark or label each sprinkler pipe weld.

7.5.2.6.2 Contractors or fabricators shall maintain certified records, which shall be available to the authority having jurisdiction, of the procedures used and the welders or welding machine operators employed by them, along with their welding identification.

7.5.2.6.3 Records shall show the date and the results of procedure and performance qualifications.

7.5.3 Groove Joining Methods.

EDUFIRE.IR

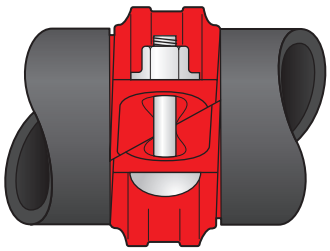

Exaggerated for clarity

EXHIBIT 7.13 Details of a Grooved Fitting: (top) Actual Fitting and (bottom) Diagram of a Fitting. (Courtesy of Victaulic®)

FAQ [7.5.3.2]

Why are gaskets used in dry pipe systems required to be listed?

Gaskets on grooved couplings have a limited degree of fire endurance when used on dry pipe systems. Therefore, the listing requirements of some grooved couplings include an evaluation of the coupling's performance in dry pipe sprinkler applications. In addition, dry systems typically are exposed to extreme temperatures. Couplings for dry systems have their gaskets evaluated for their resistance to air leakage at the minimum temperatures referenced in the listing.

7.5.3.1* Pipe, fittings, valves, and devices to be joined with grooved couplings shall contain cut, rolled, or cast grooves that are dimensionally compatible with the couplings.

A.7.5.3.1 It is not the intent to require specific listing of every combination of grooved coupling, pipe, fitting, valve, and device, provided the standard groove dimensions as specified in ANSI/UL 213, *Rubber Gasketed Fittings for Fire Protection Service,* are used. Material strength and pressure rating of the fitting, valve, or device used with the grooved couplings should be considered when determining the appropriate application of a coupling when joining these components.

Couplings used to join grooved end pipe, fittings, or valves (see Exhibit 7.13) need to be installed using the preparation methods, groove types, and groove dimensions specified in the coupling manufacturer's installation instructions. Grooved couplings are listed for use with specific groove dimensions and pipe types. The pressure ratings assigned to the couplings are dependent on the attached pipe (outside diameter, thickness, material, and strength), groove type (cut or rolled), and groove tolerances. Not all couplings or gaskets are intended to be used in dry systems. Therefore, only those couplings or gaskets investigated to achieve a proper seal and listed for the application should be used in dry pipe, preaction, and deluge systems.

7.5.3.1.1* Pipe, fittings, valves, devices, and couplings that conform with or are listed in compliance with standardized groove specifications shall be considered compatible.

A.7.5.3.1.1 Standardized groove specifications pertain to the grooved couplings that comply with and the groove dimensions described in ANSI/UL 213, *Rubber Gasketed Fittings for Fire-Protection Service*. The standard dimensions are specified in ANSI/UL 213.

7.5.3.1.2 Other groove dimensions and grooving methods shall be acceptable in accordance with 7.5.5.1.

7.5.3.2 Grooved couplings, including gaskets used on dry pipe, preaction, and deluge systems, shall be listed for dry service.

7.5.4* Brazed and Soldered Joints.

A.7.5.4 The fire hazard of the brazing and soldering processes should be suitably safeguarded.

The use of soldered joints is restricted to conditions under which the system piping is filled with water and in which heat from a fire will not reach a magnitude that can compromise the integrity of the joint.

7.5.4.1 Solder joints, where permitted, shall be fabricated in accordance with the methods and procedures listed in ASTM B828, *Standard Practice for Making Capillary Joints by Soldering of Copper and Copper Alloy Tube and Fittings.*

The nationally recognized installation standard for soldering copper and copper alloy tube and fittings is ASTM B828, *Standard Practice for Making Capillary Joints by Soldering of Copper and Copper Alloy Tube and Fittings*. Exhibit 7.14 shows examples of the sweating of copper joints.

7.5.4.2 Unless the requirements of 7.5.4.3 or 7.5.4.4 are met, joints for the connection of copper tube shall be brazed.

7.5.4.3 Solder joints shall be permitted for exposed wet pipe systems in light hazard occupancies where the temperature classification of the installed sprinklers is of the ordinary- or intermediate-temperature classification.

7.5.4.4 Solder joints shall be permitted for wet pipe systems in light hazard and ordinary hazard (Group 1) occupancies where the piping is concealed, irrespective of sprinkler temperature ratings.

EDUFIRE.IR

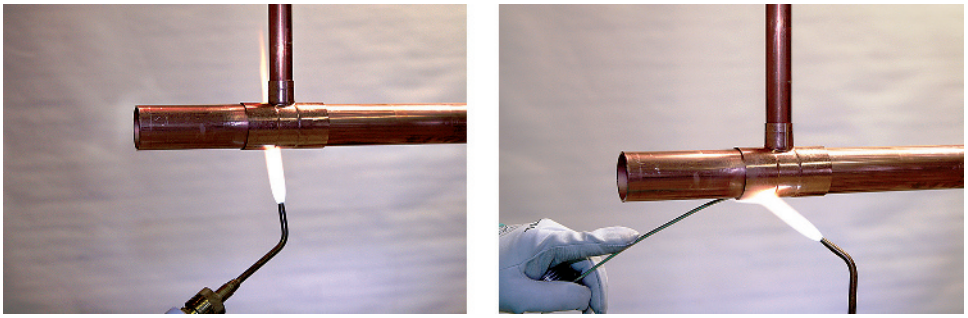

EXHIBIT 7.14 Two Examples of Sweating of Copper Joints. (Courtesy of Copper Development Association)

7.5.4.5* Soldering fluxes shall be in accordance with Table 7.3.1.1.

Highly corrosive fluxes have been known to react with the metal in the seat of the sprinkler, resulting in leakage of the device. Solders meeting ASTM B813, *Standard Specification for Liquid and Paste Fluxes for Soldering Applications of Copper and Copper-Alloy Tube*, minimize the risk of leakage.

A.7.5.4.5 Soldering fluxes manufactured to the specifications required by Table 7.3.1.1 are unlikely to cause damage to the seats of sprinklers. When brazing flux is used, it must be of a type not likely to damage the seats of sprinklers.

7.5.4.6 Brazing fluxes, if used, shall not be of a highly corrosive type.

7.5.5 Other Joining Methods.

Subsection 7.5.5 permits the use of joining methods not specifically described in NFPA 13, provided the methods are listed for use in sprinkler systems. Additionally, 7.5.5 encourages the development and application of new technology. The requirement is similar to that of 7.3.2.1 and 7.3.3 for pipe materials and 7.4.4 for fittings.

7.5.5.1 Other joining methods investigated for suitability in sprinkler installations and listed for this service shall be permitted where installed in accordance with their listing limitations, including installation instructions.

7.5.5.2 Outlet Fittings. Rubber-gasketed outlet fittings that are used on sprinkler systems shall meet the following requirements:

(1) Be installed in accordance with the listing and manufacturer's installation instructions
(2) Have all disks retrieved
(3) Have smooth bores cut into the pipe, with all cutting residue removed
(4) Not be modified

When outlet fittings are attached to pipe, concerns addressed by 7.5.5.2 include the following:

1. The use of listed fittings ensures that either the flow is not restricted or a friction loss value is assigned to assist in hydraulic calculations.
2. Holes should be cut in a manner that provides for disc retrieval to minimize obstructions in the waterway.
3. Cutting residue is to be removed, since the residue could obstruct water flow through activated sprinklers.
4. Fittings are not to be modified.

EDUFIRE.IR

7.5.6 End Treatment.

7.5.6.1 After cutting, pipe ends shall have burrs and fins removed.

Pipe must be reamed to remove burrs and fins to minimize the reduction of the inside diameter of the pipe and to remove any rough edges from the end of the pipe. Thin fins that occur after cutting are susceptible to corrosion and can dislodge, causing obstructions in the waterway. The removal of irregular edges is particularly important when the fitting utilized has internal gaskets.

7.5.6.2 Pipe used with listed fittings and its end treatment shall be in accordance with the fitting manufacturer's installation instructions and the fitting's listing.

The end treatment required will vary depending on the fitting that is used. For example, some mechanical-type fittings require that the varnish be removed from the exterior wall of the pipe entering the joint. Failure to follow the manufacturer's procedures and listing limitations can result in an unsatisfactory installation that tends to develop leaks.

7.6 Valves.

A closed valve is the primary reason why sprinkler systems do not perform adequately. The requirements in Section 7.6, as well as those in Section 16.9, are intended to minimize the occurrence of closed valves.

7.6.1 Valve Closure Time. Listed indicating valves shall not close in less than 5 seconds when operated at maximum possible speed from the fully open position.

The minimum valve closure time of 5 seconds reduces the possibility of causing a "water hammer" in a system in which water is flowing. Water hammer can instantaneously raise the pressure of the system well beyond the design pressure, which can result in damage to components or leakage. Water hammer, which sounds like knocking in the pipes, can be caused by a sudden stopping of the flow of water, causing a pressure surge.

7.7 Waterflow Alarm Devices.

Waterflow alarm devices shall be listed for the service and so constructed and installed that any flow of water from a sprinkler system equal to or greater than that from a single automatic sprinkler of the smallest K-factor installed on the system will result in an audible alarm on the premises within 5 minutes after such flow begins and until such flow stops.

7.8 Additives and Coatings.

Additives and coatings are required to be listed for several reasons. The additive or coating must be compatible with all the internal parts of the system, including the pipe itself, fittings, gaskets, seats, seals, and any other part to which the additive or coating is exposed. In addition, the additive or coating should not be flammable, electrically conductive, or harmful to people exposed to water discharging from the system.

7.8.1 Additives to the water supply intended for control of microbiological or other corrosion shall be listed for use within fire sprinkler systems.

7.8.2 Internal pipe coatings, excluding galvanizing, intended for control of microbiological or other corrosion shall be listed for use within fire sprinkler systems.

EDUFIRE.IR

References Cited in Commentary

National Fire Protection Association, 1 Batterymarch Park, Quincy, MA 02169-7471.

NFPA 25, *Standard for the Inspection, Testing, and Maintenance of Water-Based Fire Protection Systems,* 2017 edition.

NFPA 51B, *Standard for Fire Prevention During Welding, Cutting, and Other Hot Work,* 2019 edition.

ASTM International, 100 Barr Harbor Drive, P.O. Box C700, West Conshohocken, PA 19428-2959.

ASTM B813, *Standard Specification for Liquid and Paste Fluxes for Soldering Applications of Copper and Copper-Alloy Tube,* 2016.

ASTM B828, *Standard Practice for Making Capillary Joints by Soldering of Copper and Copper Alloy Tube and Fittings,* 2010.

American Welding Society, 550 N.W. LeJeune Road, Miami, Florida 33126.

AWS B2.1/B2.1M, *Specification for Welding Procedure and Performance Qualification*, 2014.

EDUFIRE.IR

EDUFIRE.IR

CHAPTER

8

System Types and Requirements

REORGANIZATION NOTE

The new Chapter 8 contains the requirements from Chapter 7 of the 2016 edition, with a few exceptions. One exception is the section "Additives and Coatings," which has been moved into the new Chapter 7.

Chapter 8 provides the installation rules and characteristics that are unique to a particular type of system. The types of systems addressed by NFPA 13 include wet pipe, dry pipe, preaction, deluge, combined dry pipe and preaction, multicycle, antifreeze, outside systems for exposure protection, systems used in refrigerated spaces, and systems for commercial-type cooking equipment and ventilation. Prior to the 2016 edition, NFPA 13 provided guidance on circulating closed-loop systems. The technical committee on sprinkler system installation decided to remove the language related to circulating closed-loop systems because they were concerned that additional fluids used to extend the life of nonsprinkler system components, such as heating units, chillers, or companion equipment associated with heating, ventilating, and air conditioning (HVAC) systems, might create a compatibility issue with some sprinkler system components.

The information in this chapter ranges from the relatively simple requirement for pressure gauges to the limitations imposed on dry pipe system sizes. The correct application of antifreeze in sprinkler systems is also an important part of Chapter 8.

CLOSER LOOK

Selecting the Right System

Whether the decision is that of the design professional (specifying engineer) or the sprinkler contractor's engineering technician, choosing the type of system(s) that will be protecting the building is a critical step. NFPA 13 allows any of the systems in Chapter 8 to be utilized. However, the first choice that should be considered for any building is a wet system. The first factor to consider when weighing the appropriateness of a wet system is the temperature of the building and of the area where the system is to be installed. Will the space be conditioned to 40°F (4°C) or greater? If the temperature in the space will possibly be less than 40°F (4°C), can a professional engineer perform heat loss calculations to prove that the pipe will not freeze? See 16.4.1.5 for the language that allows this option. There are cooler building operations where the temperature will drop down to — but never below — 36°F (2.2°C). If an engineer can prove that the water in the piping will not freeze, then a wet system is allowed.

If there are spaces that can be protected with dry sprinklers attached to the wet system and conforming to 15.3.1, this is preferable to any of the other system types. Wet pipe systems are the most reliable and cost effective and should be the preferred choice for most building types.

8.1 Wet Pipe Systems.

Wet pipe sprinkler systems are the most common type of sprinkler systems in use today. In wet pipe systems, the piping contains water at all times and is connected to a water supply so that water discharges immediately from a sprinkler when the sprinkler activates. Because these systems contain water at all

EDUFIRE.IR

times, wet pipe sprinkler systems are vulnerable to freezing. Wet pipe systems have relatively few complicated and maintenance-driven components, thus they have an inherently higher degree of reliability than other system types.

8.1.1 Pressure Gauges.

The gauges required need only be approved, not listed, as with other system components whose failure does not cause a detrimental effect on the proper operation of the sprinkler system. There are many options for the sprinkler contractor when it comes to gauges. Most vendors provide an option to purchase a listed gauge with the contractor's logo and contact information.

8.1.1.1 An approved pressure gauge conforming to Section 16.13 shall be installed in each system riser.

At least one pressure gauge is required in each system riser. Where any type of check valve is used at the connection to the water supply, two gauges are required — one on the supply side of the check valve and one on the system side. (See Exhibit 8.1.) If a backflow preventer is used as the system control and check valve, a gauge is required on the supply side of the backflow device as well as the system side.

8.1.1.2* Pressure gauges shall be installed above and below each alarm check valve or system riser check valve where such devices are present.

N **A.8.1.1.2** Pressure gauges installed on both sides of a check valve are necessary for several reasons. They can quickly indicate an abnormal condition such as a closed valve or an inoperable check valve. If the pressure on the downstream side of a check valve is less than the pressure on the upstream side, either the pressure gauges are faulty or the check valve is inoperable. If the pressure on the upstream side of a check valve is less than the pressure on the downstream side, the pressure is trapped indicating a higher than normal pressure. This erroneous pressure will then be part of a main drain test. If a pressure gauge is installed only on the downstream side of the check valve a pressure would be indicated but the pressure on the upstream side could be 0.0 psi indicating a severe problem.

N **8.1.1.2.1** A single pressure gauge shall be permitted to be installed on a manifold below multiple riser check valves or alarm check valves.

8.1.1.2.2 Pressure gauges below check valves required by 16.9.11 and 16.15.2.2(1) shall not be required.

EXHIBIT 8.1 Alarm Check Valve with Gauge Above and Below.

EDUFIRE.IR

A pressure gauge is not required on the supply side of individual floor control valve assemblies even if the assembly contains a check valve and a waterflow switch. This requirement is applicable to combined standpipe/sprinkler systems, as illustrated in Figures A.16.15.2.2(a) and (b), as well as other horizontal system riser assemblies on individual floors. Since there are gauges on the standpipe system at the top, an additional gauge on every floor would be redundant. The supply pressure on each floor can easily be calculated by reading the gauge at the top and reducing for elevation.

It is not unusual for the gauge on the system side of the valve to indicate a higher pressure than the supply gauge. System pressures rise and fall due to changes in temperature and surges from the water supply. The higher pressures are usually trapped in the system by the check valve. Readings from system gauges can be used to establish a database on the available pressure in the water supply. The pressure gauge located on the water supply side of the check valve in the system riser is also used during the main drain test required by NFPA 25, *Standard for the Inspection, Testing, and Maintenance of Water-Based Fire Protection Systems,* to establish a record of residual pressures in the water supply.

8.1.2 Relief Valves.

8.1.2.1 Unless the requirements of 8.1.2.2 are met, a wet pipe system shall be provided with a listed relief valve not less than ½ in. (15 mm) in size and set to operate at 175 psi (12 bar) or 10 psi (0.7 bar) in excess of the maximum system pressure, whichever is greater.

Temperature differentials in a building can increase pressure, which, because wet pipe systems are closed systems, can cause static pressures in the system to exceed 175 psi (12 bar). These pressures act on system components and can cause system failure if the pressures exceed the components' pressure ratings. Listed ½ in. (15 mm) relief valves are required on all wet pipe systems, even if piping is located in continuously conditioned environments. The location of the relief valve affects the pressure relief valve setting needed to protect the system. Therefore, accounting for elevation pressure experienced at the base of the riser is necessary. For an example of a listed ½ in. (15 mm) relief valve installed on a sprinkler system, see Exhibit 8.2. Many of the system components are already rated for pressures higher than 175 psi (12 bar). Also, many of the components listed for 175 psi (12 bar) have been evaluated at pressures as high as five times the listed pressure, so there are relatively few total failures of sprinkler system components, especially when pressure relief valves are installed.

FAQ [8.1.2.1]

Why are listed ½ in. (15 mm) relief valves required on wet pipe systems?

The intent of 8.1.2.1 is to prevent pressure buildup in wet pipe systems from exceeding the working pressure of the system components, which is generally 175 psi (12 bar).

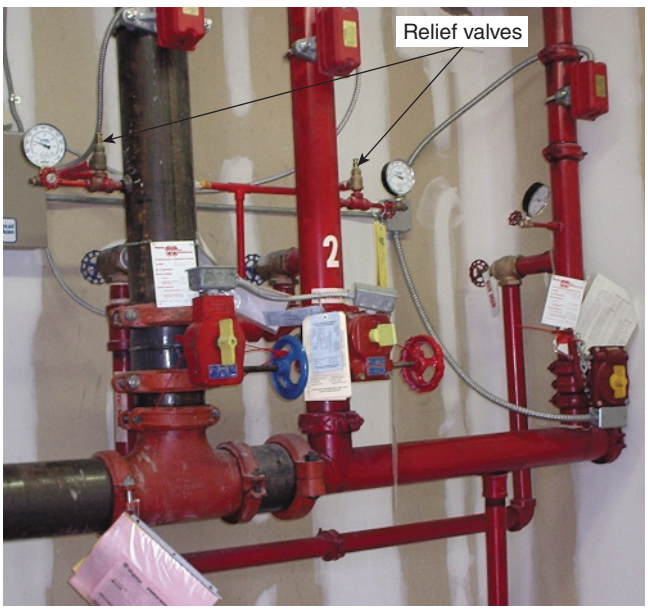

EXHIBIT 8.2 *Relief Valves Installed on Wet Pipe Sprinkler System. (Courtesy of Byron Blake)*

EDUFIRE.IR

Tree-type systems have been typically viewed as having a significant amount of trapped air, while gridded systems have a limited number of air pockets. This viewpoint is due to the "dead end" nature of a tree system. With increased efforts to vent trapped air as part of the activities associated with corrosion mitigation (see 8.1.5) or improving alarm activation on systems with backflow preventers, all wet pipe systems are now treated as having a minimal amount of trapped air. Therefore, all wet pipe systems are now required to have listed ½ in. (15 mm) relief valves installed. Sometimes when excessive air is trapped in a system and there is a backflow preventer, a phenomenon called intermittent cycling can occur, especially when the backflow springs have a relatively high tension rating. When a sprinkler opens or the inspector's test is opened, water starts to leave the system. Since the spring tension is high, the backflow checks do not open immediately. Eventually the backflow checks open and water rushes into the system. Air in the system creates a cushion, and the water stops rushing by the flow switch before it activates and the cycle repeats. This would happen assuming that there is a delay on the flow switch, which is common to prevent false alarms due to pressure surges.

8.1.2.2 Where auxiliary air reservoirs are installed to absorb pressure increases, a relief valve shall not be required.

The auxiliary air reservoirs permitted by 8.1.2.2 need to be large enough to account for any pressure buildup in the system. One method is to use an expansion chamber, as specified in 8.6.3.3, to address the anticipated pressure increases within wet pipe systems. The procedures for sizing the expansion chamber should be similar to those found in A.8.6.3.2. Most manufacturers will provide the calculations and recommend the appropriate tank if they are provided basic information such as high and low temperatures, volume of the system, and normal static pressure.

8.1.2.3 A relief valve per 8.1.2.1 shall be required downstream of check valves required by 16.15.2.2(1).

Portions of systems having a check valve, such as those after a floor control assembly, as noted in 16.9.3.3.2, need to have a listed pressure relief valve installed to ensure that damage does not occur to the system because of overpressurization. Often, a fire pump is used in a combination standpipe/sprinkler system. The initial pressure surge when the pump first operates can become trapped beyond the check valve. The relief valve should alleviate any chance of overpressurizing any of the floors.

FAQ [8.1.3]

Can a wet pipe system supply an auxiliary system?

Subsection 8.1.3 permits a combined system riser to be used where the available water supply is adequate to support such an arrangement.

8.1.3 Auxiliary Systems. A wet pipe system shall be permitted to supply an auxiliary dry pipe, preaction, or deluge system, provided the water supply is adequate.

Exhibit 8.3 illustrates a combined system riser in which the water supply for the dry pipe system is supplied from the wet pipe system. The connection for the supply to the dry pipe system in Exhibit 8.3 can be made anywhere downstream of the wet system control assembly. The total system protection area limitations (for this example, the total area covered by the wet pipe plus dry pipe) specified in Section 4.5 apply in the consideration of an auxiliary system. A control valve on the auxiliary system is desirable in order to facilitate maintenance and resetting of the system valve on the auxiliary system. The user needs to be aware that the combined system riser is not the same as a combined sprinkler/standpipe riser. Since the protection area limitations of Section 4.5 cannot be exceeded, there is less concern that two systems could be removed from service simultaneously. Some examples where this occurs are small loading docks, outside restaurant seating areas, or deluge systems protecting glazing assemblies required to be protected by the building code.

8.1.4 Heat tracing shall not be used in lieu of heated valve enclosures to protect the valve and supply pipe from freezing.

The evolution of heat tracing has gone from bulk piping only to standpipes and finally to heat tracing that is listed for branch lines with pendent sprinklers or with sprinklers on sprigs of sufficient length so the insulation around the heat tracing does not obstruct the spray pattern of the sprinkler. Currently, NFPA 13 prohibits heat tracing for the freeze protection of a wet system valve assembly.

8.1.5 Air Venting. A single air vent with a connection conforming to Section 16.7 shall be provided on each wet pipe system utilizing metallic pipe. *(See A.16.7.)*

EDUFIRE.IR

Combined System Riser Assembly—Equipment Legend

1. Main water supply
2. Water supply control valve (supervised)
3. Alarm check valve assembly (configuration varies between manufacturers)
4. Bulk feed main—to wet system sprinklers
5. Bulk feed main—dry system supply
6. Dry pipe valve assembly (configuration varies between manufacturers)
7. Air compressor (shown for diagrammatic purposes only)
8. Bulk feed main—to dry system sprinklers
9. Check valve
10. Fire department connection

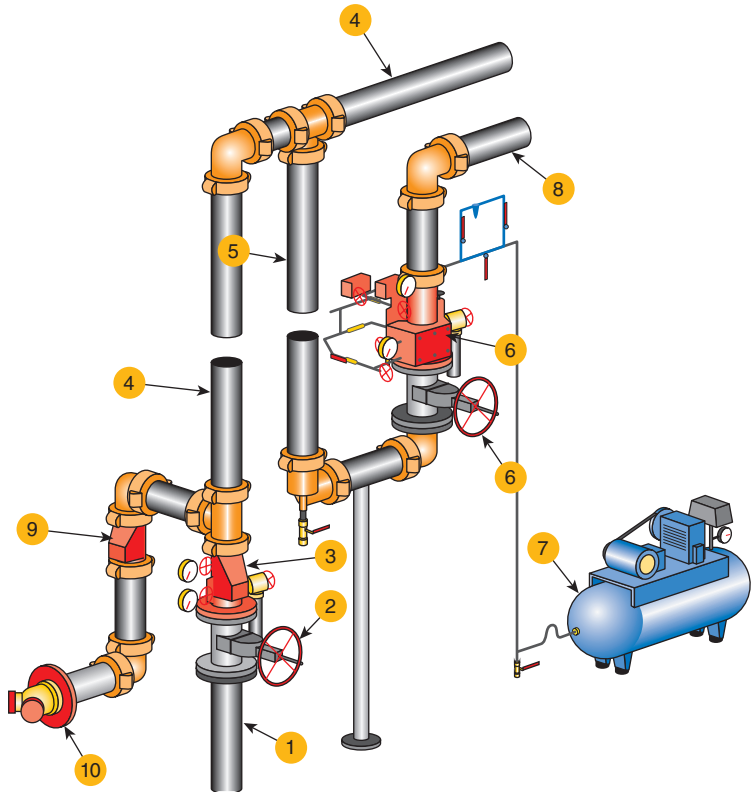

EXHIBIT 8.3 Example of a Combined System Riser. (Courtesy of Stephan Laforest)

After a significant review of corrosion and corrosion reduction, the technical committees responsible for NFPA 13 concluded that venting air from a wet system can help reduce corrosion. As listed piping has become thinner, the chance of corrosion has increased, and certain manufacturing processes for steel pipe are more susceptible to corrosion along the seam. Chapter 16 provides the requirements for installation of the air vent, and a single air vent will be provided for each separate wet system.

There are several different methods for adding a vent to a system, and the sprinkler system contractor, in conjunction with a specifying engineer or the owner, will determine which method to use. Automatic vents can be expensive, and their inclusion in the design should be discussed with and approved by the owner. The most common method is to provide a small valve at the high point of the system. There is no requirement to pipe the discharge from this valve to a drain or for the location of the valve to be a specific distance above the floor. It is also acceptable to install the inspector's test line at the high point and consider it the system vent. There are no requirements to provide calculations for determining where to place the vent or which location will vent the largest amount of air.

SEE ALSO

Subsection 3.3.206 for the definition of what constitutes a sprinkler system.

8.1.5.1 Venting from multiple points on each system shall not be required.

8.2* Dry Pipe Systems.

Dry pipe systems are usually used in buildings or in areas that are subject to cold or freezing temperatures. Dry pipe systems typically are filled with pressurized air or nitrogen rather than water. As with wet pipe systems, automatic sprinklers are used. The activation of a sprinkler causes air pressure in the system to drop. This pressure drop activates a dry pipe valve and allows water to flow through the system. Dry pipe systems are more complex than wet pipe systems and require greater attention regarding their design, installation, and

EDUFIRE.IR

maintenance. Exhibit 3.46 provides an example of a dry pipe sprinkler system, and Exhibit 8.4 illustrates some of the components found on the system riser of a dry pipe system.

It is not the intent of NFPA 13 to require a building or portions of a building to be heated to accommodate the sprinkler system, and dry pipe systems remain a viable alternative where freezing conditions exist. Although requiring portions of buildings to be heated in order to install wet systems is not the intent, NFPA 13 does require that the valve rooms for dry pipe systems be heated. (See 8.2.5.2.)

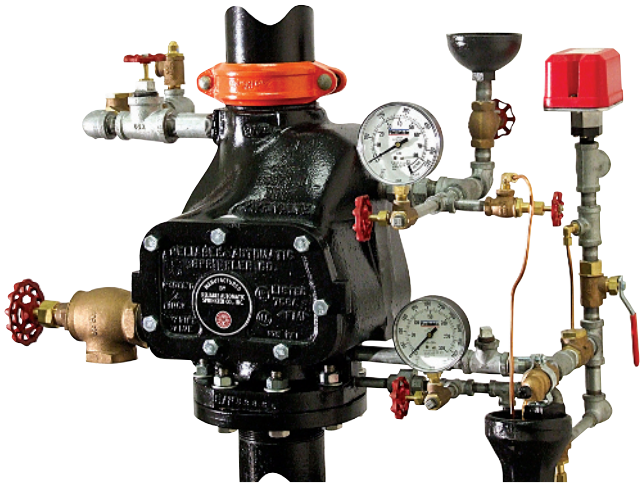

EXHIBIT 8.4 *Dry Pipe Valve and Associated Components. (Courtesy of Reliable Automatic Sprinkler Co., Inc.)*

A.8.2 A dry pipe system should be installed only where heat is not adequate to prevent freezing of water in all parts of, or in sections of, the system. Dry pipe systems should be converted to wet pipe systems when they become unnecessary because adequate heat is provided. Sprinklers should not be shut off in cold weather.

Where two or more dry pipe valves are used, systems preferably should be divided horizontally to prevent simultaneous operation of more than one system and the resultant increased time delay in filling systems and discharging water and to prevent receipt of more than one waterflow alarm signal.

Where adequate heat is present in sections of the dry pipe system, consideration should be given to dividing the system into a separate wet pipe system and dry pipe system. Minimized use of dry pipe systems is desirable where speed of operation is of particular concern.

8.2.1 Pressure Gauges. Approved pressure gauges in accordance with Section 16.13 shall be connected as follows:

(1) On the water side and air side of the dry pipe valve
(2) At the air pump supplying the air receiver where one is provided
(3) At the air receiver where one is provided
(4) In each independent pipe from air supply to dry pipe system
(5) At quick-opening devices

In a dry pipe system, pressure gauges are used to monitor water pressures in the water supply, as well as to monitor air pressures in the system. Many dry valves now are sold pretrimmed with the appropriate gauges installed in the required locations.

Because exhausters are no longer manufactured or available, the 2010 edition removed them from the list of where gauges are required. In the 2013 edition, the term *accelerator* was changed to *quick-opening device* to be consistent with the terminology used throughout NFPA 13.

EDUFIRE.IR

8.2.2 Sprinklers. The following sprinkler orientations and arrangements shall be permitted for dry pipe systems:

(1) Upright sprinklers
(2)* Listed dry sprinklers

A.8.2.2(2) Installation limitations of listed dry pendent sprinklers can vary with different products. Limitations should be included in product installation instructions to warn the user of the potential accumulation of water, scale, and sediment from collecting at the sprinkler.

(3) Pendent sprinklers and sidewall sprinklers installed on return bends, where the sprinklers, return bend, and branch line piping are in an area maintained at or above 40°F (4°C)
(4) Horizontal sidewall sprinklers installed so that water is not trapped
(5) Pendent sprinklers and sidewall sprinklers, where the sprinklers and branch line piping are in an area maintained at or above 40°F (4°C), the water supply is potable, and the piping for the dry pipe system is copper or CPVC specifically listed for dry pipe applications

Not all types of sprinklers are permitted for dry pipe systems. Since dry pipe systems are installed in areas that can be subject to freezing, any water that remains in the piping after system operation should be quickly drained. The use of pendent sprinklers would allow a small amount of water to remain on the seat of the operating mechanism. This water would eventually freeze and impair the sprinkler. Therefore, pendent sprinklers are not permitted. However, if a sprinkler in the pendent position is needed, 8.2.2(2) permits the use of listed dry sprinklers as an option. Dry sprinklers prevent water from accumulating on the sprinkler's operating mechanism and in the drop nipple. This arrangement minimizes the time it takes the system to be returned to its operating condition. A limit is placed on the size of the fitting used with a dry pendent sprinkler in order to avoid trapping water on the operating mechanism. Also, dry sprinklers should be installed only in tees or other fittings as approved by the sprinkler manufacturer as opposed to 90-degree elbows. To further aid in the drainage of dry pipe systems, 16.10.3 requires piping to be pitched to a low point drain.

CLOSER LOOK [8.2.2]

Dry Pipe Systems and Scaling

Another factor for consideration where dry pipe systems are used is the need to minimize the obstruction potential from internal pipe scale that can break loose after the dry valve operates. The water velocities experienced when the dry pipe valve opens are likely to dislodge pipe scale and carry it to the open sprinklers. The accumulation of material that could inhibit sprinkler operation includes sediment, mineral deposits, and scale from other piping, such as valves, underground pipe, and water supplies. The use of pendent and sidewall sprinklers on return bends is permitted by 8.2.2(3) as an alternative to dry sprinklers where the return bend, branch line piping, and sprinkler are in a heated area that is maintained at or above 40°F (4°C). The return bend serves to minimize obstructions to water flow caused by pipe scale. Item (4) of 8.2.2 permits listed horizontal sidewall sprinklers in dry pipe, preaction, and combined dry pipe and preaction systems, provided they are installed so that water is not trapped behind them. If these sprinklers are installed in such a manner as to avoid the accumulation of water, scale, and sediment, there is no compelling reason to restrict their use in this application.

Where supplied by potable water and where chlorinated polyvinyl chloride (CPVC) or copper piping is used throughout the system, 8.2.2(5) permits the use of pendent and sidewall sprinklers without a return bend where the sprinklers and branch lines are in a heated area that is maintained at or above 40°F (4°C). Note that a raw water source as defined in 3.3.174 would not be considered potable. CPVC pipe, historically restricted to wet pipe systems, must be listed for dry pipe systems to be used in this application. All the applicable special listing requirements must be followed, such as any limits on the maximum air pressure. If the water supply is not potable, return bends are still required even if corrosion-resistant pipe is used as required by 16.3.11.

The conditions necessary to implement 8.2.2(3) and (5) are uncommon. One example is a cold storage warehouse that is protected with a dry pipe system. If the warehouse contains an office that is heated, and the sprinkler piping for that office is also in a heated area, the options of 8.2.2(3) or (5) could be utilized.

EDUFIRE.IR

8.2.3* Size of Systems.

A.8.2.3 The capacities of the various sizes of pipe given in Table A.8.2.3 are for convenience in calculating the capacity of a system.

For other specially listed types of pipe, consult the manufacturer to determine the actual inside diameter of the piping. The formula to determine the volume in gallons per foot (12 in. = 300 mm) is:

$$\pi \cdot r^2 \cdot 12 \div 231 = \text{gallons per foot}$$

where:

$\pi = 3.1416$
r = radius in in. (mm)
231 = in^3 per us gal. (3.785 L)

TABLE A.8.2.3 *Capacity of 1 ft of Pipe (Based on Actual Internal Pipe Diameter)*

Nominal Pipe Diameter		*Pipe*		*Nominal Pipe Diameter*		*Pipe*	
in.	*mm*	*Schedule 40 [gal (L)]*	*Schedule 10 [gal (L)]*	*in.*	*mm*	*Schedule 40 [gal (L)]*	*Schedule 10 [gal (L)]*
¾	20	0.028 (0.11)		3	80	0.383 (1.45)	0.433 (1.64)
1	25	0.045 (0.17)	0.049 (0.19)	3½	90	0.513 (1.94)	0.576 (2.18)
1¼	32	0.078 (0.30)	0.085 (0.32)	4	100	0.660 (2.50)	0.740 (2.80)
1½	40	0.106 (0.40)	0.115 (0.43)	5	125	1.040 (3.94)	1.144 (4.33)
2	50	0.174 (0.66)	0.190 (0.72)	6	150	1.501 (5.68)	1.649[b] (6.24)
2½	65	0.248 (0.94)	0.283 (1.07)	8	200	2.66[a] (10.1)	2.776[c] (10.5)

[a]Schedule 30.
[b]0.134 wall pipe.
[c]0.188 wall pipe.

8.2.3.1* The system capacity (volume) controlled by a dry pipe valve shall be determined by 8.2.3.2, 8.2.3.3, 8.2.3.4, 8.2.3.5, or 8.2.3.7.

A.8.2.3.1 The 60-second limit does not apply to dry systems with capacities of 500 gal (1900 L) or less, nor to dry systems with capacities of 750 gal (2850 L) or less if equipped with a quick-opening device.

8.2.3.1.1 For dry pipe systems protecting dwelling unit portions of any occupancy, system size shall be such that initial water is discharged from the system test connection in not more than 15 seconds, starting at the normal air pressure on the system and at the time of fully opened inspection test connection.

The concept of 8.2.3.1.1 is not new. The technical committee on sprinkler system installaiton intent prior to the 2013 edition was to mandate water delivery to the most remote portion in dwelling units protected by a dry system within 15 seconds of sprinkler activation. In the 2013 edition, this requirement was clarified and included as the only option for the user. The 15-second limitation severely limits the size of dry systems used in residential occupancies. The 15-second limitation would not apply to sprinklers that might be installed in an attic or a concealed space over a dwelling unit. A common practice is to install a wet system immediately above the sheathing and trusses over a dwelling unit, and the piping is tented and covered with insulation. A separate dry system is then provided to protect only the attic space above the dwelling unit.

EDUFIRE.IR

DESIGNER'S CORNER [8.2.3.1]

Why is it acceptable to have a water delivery time greater than 60 seconds for systems less than 500 gal (1900 L) in size that are not protecting dwelling units?

The water delivery time in a sprinkler system is tested with the air escaping from the piping through an inspector's test connection that simulates the orifice size of a single sprinkler on the system. During a fire, if only a single sprinkler opens, it is generally a sign that the fire is not growing and the delay of delivering water to the fire will not be significant in terms of property protection. From a life safety perspective, however, that might not be true, which is why this rule is no longer permitted to be used for the protection of dwelling units.

In nonresidential fire situations, where more than one sprinkler does open, the air will be able to discharge from multiple orifices, speeding up the delivery of water to the most remote portions of the system. Tests conducted by the National Fire Sprinkler Association in 2001 showed that for a 500 gal (1900 L) dry pipe system, water delivery times that were in excess of 90 seconds to an inspector's test connection were cut down to less than 50 seconds when a few additional sprinklers opened during a fire, helping to justify this long-standing rule.

It is important to have a rule that allows small dry pipe systems to exist without any specific waster delivery time, because it is extremely difficult to predict water delivery time on a system that has not been installed. Most dry pipe systems are designed and installed without it being known exactly how long it will take to get water to the inspector's test connection. After the system is installed, the test is performed to determine that time. If the time is slightly more than 60 seconds, it is difficult for the contractor to do anything about the situation at that point since the system is already installed.

There is a computer program on the market that can predict water delivery times. However, this program might not be affordable to designers who will use it only once or twice a year. Providing the users of NFPA 13 with a simple-to-use and easy-to-enforce rule has worked well over several decades. And because the loss history with this rule in dry pipe systems has been good, the technical committee does not see a need to make any changes at this time.

8.2.3.1.1.1 Dry pipe systems protecting dwelling unit portions of any occupancy shall not be permitted to use the options outlined in 8.2.3.2, 8.2.3.3, or 8.2.3.4.

For the sizing of dry pipe systems, with the exception of those protecting dwelling units, NFPA 13 provides the following five options:

1. A 60-second water delivery (see 8.2.3.2)
2. A 500 gal (1900 L) volume exemption (see 8.2.3.3)
3. A 750 gal (2850 L) volume exemption with a quick-opening device (see 8.2.3.4)
4. A water delivery calculation (see 8.2.3.5)
5. A water delivery to test manifold (see 8.2.3.7)

Paragraph 8.2.3.1.1 addresses safety concerns associated with delayed water delivery from dry pipe systems utilized in dwelling unit portions of occupancies.

8.2.3.2 System size shall be such that initial water is discharged from the system test connection in not more than 60 seconds, starting at the normal air pressure on the system and at the time of fully opened inspection test connection.

Paragraph 8.2.3.2 provides the general requirement that all dry pipe systems, except those protecting dwelling units, must deliver water to the inspector's test connection within 60 seconds from the time the inspector's test connection is fully opened. Specific allowances for small dry pipe systems are addressed in 8.2.3.3 and 8.2.3.4. This allowance exempts smaller systems from the 60-second requirement. The user must be aware of other code requirements, such as those found in *NFPA 72®, National Fire Alarm and Signaling Code®*, in regard to maximum time from the initial flow indication to the required reporting from the central station to the fire department. The time of water delivery is measured from the time at which the inspector's test connection is fully opened to the time at which there is initial water discharge from the inspector's test connection. Initial water delivery is not to be confused with the initial expelling of condensation that might have built up in the system, but it is also not the intent of 8.2.3.2 to require a steady stream of water flowing from the inspector's test connection before concluding the time measurement.

EDUFIRE.IR

CLOSER LOOK [8.2.3]

Dry Pipe System Volume Limits

Paragraphs 8.2.3.3 and 8.2.3.4 specify volume limitations of dry pipe systems. The water delay associated with dry pipe sprinkler systems is a significant disadvantage of their use. The delay consists of two parts: the time it takes for the dry pipe valve to operate and the time it takes for water to reach the open sprinkler once the valve operates. To compensate for those delays, NFPA 13 requires certain provisions, such as limitations on system volume, water delivery time, installation of quick-opening devices (see 8.2.3.4), and a larger design area. (See 19.3.3.2.5.)

As an example, the authority having jurisdiction can provide a final sign-off for a small 200 gal (750 L) capacity dry pipe system where the water delivery time during the final acceptance test exceeds the limitations for larger systems of 60 seconds. The disparity in NFPA 13 of allowable water delivery time for smaller and larger systems is related to the history of the requirements for dry pipe systems in the standard. Earlier editions of NFPA 13 permitted dry pipe systems only if they were less than 500 gal (1900 L) capacity, with no maximum water delivery time specified. When an allowance for larger systems was proposed to the standard, systems larger than 500 gal (1900 L) were allowed with the caveat that water could be delivered to the sprinklers within 60 seconds or with a quick-opening device for systems larger than 500 gal (1900 L) up to 750 gal (2850 L). Subsequent proposals to make the 60-second time limit also apply to smaller systems have been rejected with the substantiation that there have been no known problems with smaller existing systems that had been allowed to be installed without a water delivery time limit.

Dry pipe systems having no required water delivery time limit are limited to a maximum volume of 500 gal (1900 L) and 750 gal (2850 L) with a quick-opening device. Where these two arrangements are present, NFPA 13 does not establish any pass/fail criteria for water delivery time.

Where the system volume exceeds 750 gal (2850 L), water delivery must be evaluated by using one of the two methods that follow.

In the first method, the volume limitation can be exceeded if initial water discharge to the inspector's test connection can be achieved in 60 seconds or less, as specified in 8.2.3.2. For this method, the only means to verify a delivery time of 60 seconds or less is by conducting a flow test through the inspector's test connection. This test connection is piped from the most remote branch line at the highest elevation of that branch line. The time interval starts when the valve is fully open and stops upon the initial discharge of water. It does not require a steady stream of water with no air bubbles. Failure of this test can result in rejection of the system by the authority having jurisdiction. It must be noted that the 60-second water delivery is not required where the 750 gal (2850 L) volume limitation is not exceeded, and the area protected is not a dwelling unit. Some dry pipe systems with capacities less than 750 gal (2850 L) can take up to 3 minutes to deliver water to the inspector's test connection, which is considered acceptable.

In the second method, the volume limitation can be exceeded where water delivery is calculated with a listed calculation method (see 8.2.3.5) or initial water discharge is verified by an appropriately sized test manifold. (See 8.2.3.7.)

8.2.3.3 A system size of not more than 500 gal (1900 L) shall be permitted without a quick-opening device and shall not be required to meet any specific water delivery requirement to the inspection test connection.

8.2.3.4 A system size of not more than 750 gal (2850 L) shall be permitted with a quick-opening device and shall not be required to meet any specific water delivery requirement to the inspection test connection.

8.2.3.5 System size shall be based on dry pipe systems being calculated for water delivery in accordance with 8.2.3.6.

Paragraph 8.2.3.5 provides the designer the option to calculate the water delivery time using a listed calculation program and meeting the design requirements of 8.2.3.6 and Table 8.2.3.6.1. This calculation method takes advantage of research into dry pipe sprinkler systems using various piping configurations and water supplies. The testing has led to NFPA 13 permitting the use of listed calculation programs, which are capable of predicting the trip, transit, and compression time of a dry pipe sprinkler system. Actual verification tests indicate that the program is accurate to within 2 seconds. Although the delivery time for this method is not required to be verified, if the time for a single outlet as required by 28.2.3.2.3 exceeds 70 seconds, an evaluation of the calculation and the system installation might be necessary, as specified in A.28.2.3.2.3.1.

8.2.3.6 Dry Pipe System Water Delivery.

8.2.3.6.1 Calculations for dry pipe system water delivery shall be based on the hazard shown in Table 8.2.3.6.1.

EDUFIRE.IR

TABLE 8.2.3.6.1 *Dry Pipe System Water Delivery*

Hazard	*Number of Most Remote Sprinklers Initially Open*	*Maximum Time of Water Delivery (seconds)*
Light	1	60
Ordinary I	2	50
Ordinary II	2	50
Extra I	4	45
Extra II	4	45
High piled	4	40

Table 8.2.3.6.1 represents the anticipated minimum number of the most remote sprinklers initially open in the early stages of fire growth. Fires that have a higher heat release rate are expected to activate a greater number of sprinklers. A larger number of open sprinklers results in a more rapid transit time for water traveling from the dry pipe valve, through the piping network, and to the open sprinklers. The reduction in time due to number of open sprinklers has been justified to more closely represent the actual performance of dry pipe systems in response to fires. The development of the table requirements was established to address the time interval between the operation of the first sprinkler to the fourth sprinkler in various hazards (fire growth).

For example, the 45 seconds required for extra hazard is a conservative reduction in time from the 60-second criterion for a single sprinkler in light hazard. With the heat release of these hazards, four sprinklers activate in a short period of time, and the result is a more accurate delivery time to simulate the real world event of activation sequence, allowing the system to deliver water sooner than 60 seconds. Table 8.2.3.6.1 provides various numbers of open sprinklers and reduced water delivery times to those open sprinklers.

8.2.3.6.2 The calculation program and method shall be listed by a nationally recognized testing laboratory.

Exhibit 8.5 shows a summary page from a listed calculation program. It is important that these data be kept with the system documentation for final system acceptance and future system evaluation.

8.2.3.6.3 For dry pipe systems protecting dwelling unit portions of any occupancy, the sprinklers in the dwelling unit shall have a maximum water delivery time of 15 seconds to the single most remote sprinkler.

Although 8.2.3.6.3 predominantly addresses calculated water delivery, the 15-second criterion for dwelling units applies to either calculated or manually tested systems. The application of the 15-second rule is predicated by the residential occupancy and not by the type of sprinkler being used. Even though a 15-second limit is also part of the listing test for residential sprinklers intended for use in a dry pipe system, spray sprinklers must also comply with this requirement. The residential occupancy would still be considered a light hazard occupancy but is not permitted to use the 60-second delivery time in Table 8.2.3.6.1.

8.2.3.6.4 Residential sprinklers shall be listed for dry pipe applications.

Not all listed residential sprinklers are specifically listed for use in dry systems. The manufacturer's literature must be analyzed to determine if the sprinkler is acceptable for use in the system. It is possible listed residential sprinklers for use in a dry system might also be listed as part of an entire system using manufacturer-specific components.

8.2.3.7* System size shall be such that initial water discharge from the system trip test connection or manifold outlets is not more than the maximum time of water delivery specified in Table 8.2.3.6.1, starting at normal air pressure on the system and at the time of fully opened test connection.

EDUFIRE.IR

Job: ABC Company employee garage

System Summary

Dry pipe system

System Volume (gal):	310.8
Fluid:	Water @ 60F (15.6C)
Gas:	Air @ 40°F and 25 psi
Differential Trip Ratio:	5.5
Accelerator:	Not Used

System time Parameters

Trip Time:	8.2s
Fluid Delivery Time:	26.22s @ h200
Operating Time:	26.309s @ h200
Required Fluid delivery Time:	50s
Safety Factor:	47.6%

Water Supply Parameters

Flow	Pressure
0	90
1000	60

Parameters of the 2 Open Heads

Head#	K-Factor	Orifice	Minimum Operating Pressure	Transit Time	Fluid Delivery Time	Oper. Time SHALL NOT exceed 50s	Open Time
	(gpm/psi½)	(in)	(psi)	(s)	(s)	(s)	(s)
h199	5.6	0.437	12.1	17.28	25.48	26.309	0
h200	5.6	0.437	12.1	18.02	26.22	26.309	0

Protocol: NOT USED

NOT USED Statement

Modelling Assumptions

1. Fluid is incompressible.
2. Pipes do not suffer deformation.
3. Fluid front is perpendicular to pipe centerline.
4. The dry pipe valve opens instantly.

File: FDT Day 3.tyc

Date 2/20/2009

Copyright © 2002-2008 Tyco Fire and Building Products

Page 36

EXHIBIT 8.5 Sample of Water Delivery Calculation Program Output. (Courtesy of Tyco Fire Products LP)

EDUFIRE.IR

Paragraph 8.2.3.7 provides the option of a manual flow test through a test valve or test manifold simulating the flow through the required number of open sprinklers in Table 8.2.3.6.1. This test uses the number of open sprinklers and the associated durations identified in Table 8.2.3.6.1. This option of a manual test is not a test to verify the calculated water delivery time from 8.2.3.5 but is an independent and equally acceptable design option.

Under the requirements of NFPA 25, waterflow tests of dry systems must be conducted periodically. When waterflow tests are conducted in accordance with NFPA 25, the water delivery time to the inspector's test should be documented. NFPA 25 does not intend that the documented value be a pass/fail criterion but rather serve as a comparative basis to identify possible system malfunctions or impairments.

A.8.2.3.7 See Figure A.8.2.3.7.

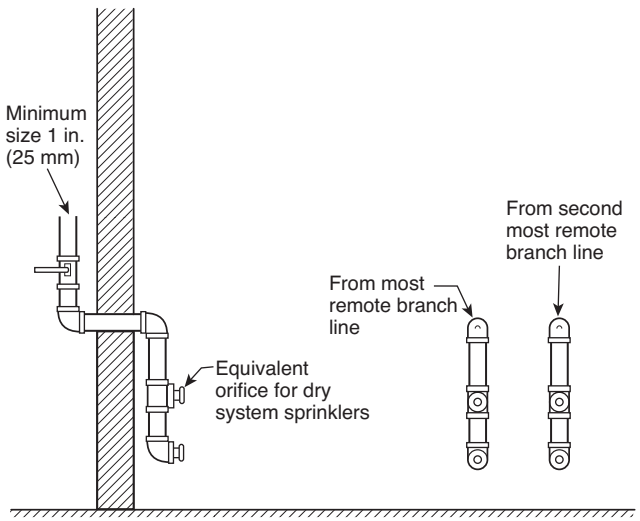

FIGURE A.8.2.3.7 *Example Manifold Arrangement (Four Sprinklers).*

8.2.3.7.1 When flow is from four sprinklers, the test manifold shall be arranged to simulate two sprinklers on each of two sprinkler branch lines.

8.2.3.7.2 When flow is from three sprinklers, the test manifold shall be arranged to simulate two sprinklers on the most remote branch line and one sprinkler on the next adjacent branch line.

8.2.3.7.3 When flow is from two sprinklers, the test manifold shall be arranged to simulate two sprinklers on the most remote branch line.

8.2.3.7.4 When flow is from one sprinkler, the test manifold shall be installed as per the requirements for a trip test connection in accordance with 16.14.2.

8.2.3.7.5 A system meeting the requirements of this section shall not be required to also meet the requirements of 8.2.3.2 or 8.2.3.5.

8.2.3.8 Dry pipe systems with water delivery times other than 8.2.3.2, 8.2.3.5, and 8.2.3.7 shall be acceptable where listed by a nationally recognized testing laboratory.

8.2.3.9 Unless installed in a heated enclosure, check valves shall not be used to subdivide the dry pipe systems.

EDUFIRE.IR

Using check valves to subdivide dry systems is one method to help improve trip times, thus resulting in larger dry systems and fewer dry valves. The requirement in 16.9.11.4 was added in the 2016 edition and indicates that the requirement for floor control valve assemblies does not apply to dry systems in parking garages. For instance, in a five-story parking garage, conceivably a single dry valve could be installed and then all floors subdivided using check valves. The system limitation of 52,000 ft^2 (4830 m^2) per floor would still apply, as well as the required fill time of the system as mandated by 8.2.6.3.2. A heated enclosure could be a room such as the heated valve room or heated stairwell.

8.2.3.9.1 When check valves are used to subdivide dry pipe systems in accordance with 8.2.3.9, a hole ⅛ in. (3 mm) in diameter shall be drilled in the clapper of each check valve to permit equalization of air pressure among the various parts of the system.

Drilling the hole in the clapper as required by 8.2.3.9.1 should not void the listing of the valve. However, this might affect the warranty of the valve. The manufacturer should be consulted to determine what is acceptable.

8.2.3.9.2 Where auxiliary drains are not provided for each subdivided section, an approved indicating drain valve supervised in the closed position in accordance with 16.9.3.3, connected to a bypass around each check valve, shall be provided as a means for draining the system.

The requirement in 8.2.3.9.2 was added in the 2013 edition to clarify that when the dry system is subdivided there must be a way to drain all sections of trapped water to prevent freezing. This draining can be accomplished by using drains on both sides of the check valve or by installing a bypass to the check valve. If a bypass is installed, it needs to be supervised closed; otherwise, it could defeat the purpose of the check valve.

FAQ [8.2.3.10]

Why are gridded dry pipe systems prohibited?

Gridded dry pipe and double interlock preaction systems are subject to excessive time delays for water to reach the operating sprinkler. Experience indicates that, in many gridded dry pipe systems, the times for delivering water to the inspector's test connection were excessive — in some cases, as long as 10 minutes. A single interlock or non-interlocked preaction system is not subject to this requirement.

8.2.3.10 Gridded dry pipe systems shall not be installed.

The multiple number of flow paths the water can take to fill the grid makes this piping configuration undesirable for dry pipe systems because of the associated time delays. Additionally, excessive amounts of air can become trapped in the system. The use of a looped piping arrangement is not prohibited for a dry pipe system because the associated water delivery time delays are not as severe as for a gridded system.

Adjacent trapped branch lines must be provided with tie-in drains. Although limiting the number of branch lines tied together is desirable, a dry pipe system with such drains is not considered a gridded system, because such tie-in drains are restricted to a maximum size of 1 in. (25 mm).

8.2.4 Quick-Opening Devices.

Quick-opening devices consist of accelerators and exhausters. Accelerators cause the dry pipe valve to operate more quickly by redirecting system air into the dry pipe valve's intermediate chamber, thus reducing the differential air-to-water-pressure ratio holding the dry pipe valve closed. Water is then allowed to more quickly enter the system piping and discharge from any operated sprinklers without having to wait the extended period of time for the system air pressure to diminish to the point at which the dry pipe valve normally would have operated.

Exhausters increase the rate at which air is discharged to atmosphere, thus reducing the time it takes for the dry pipe valve to operate by quickly reducing the system air pressure to the necessary air-to-water-pressure trip ratio. Water is then allowed to more quickly reach the open sprinklers. Since exhausters are no longer manufactured, only accelerators are used on new systems.

Additionally, there are two types of accelerators: mechanical and electronic. An electronic accelerator utilizes a system air pressure monitoring device that continuously samples system air pressure. When the air pressure drops at a rate exceeding a preset value, a solenoid valve is opened, which introduces air pressure into the intermediate chamber of the dry pipe valve. This pressure neutralizes the differential pressure holding the dry pipe valve and permits it to open. Exhibit 8.6 shows an accelerator attached to the dry pipe valve.

EDUFIRE.IR

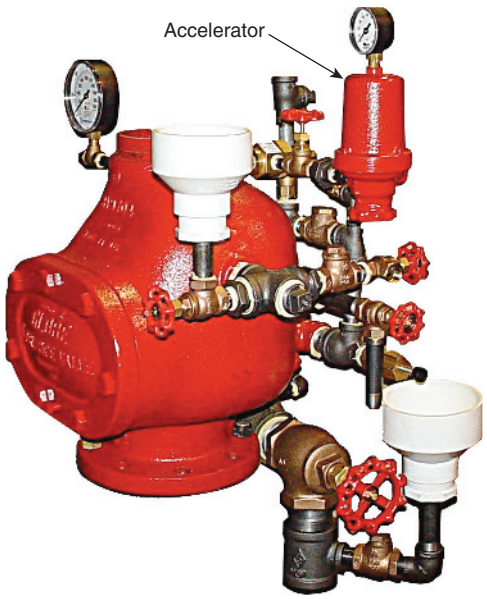

EXHIBIT 8.6 Accelerator Attached to Dry Pipe Valve. (Courtesy of Globe Fire Sprinkler Corporation)

8.2.4.1 A listed quick-opening device shall be permitted to help meet the requirements of 8.2.3.2, 8.2.3.5, 8.2.3.7, or 8.2.3.8.

8.2.4.2 The quick-opening device shall be located as close as practical to the dry pipe valve.

8.2.4.3 To protect the restriction orifice and other operating parts of the quick-opening device against submergence, the connection to the riser shall be above the point at which water (priming water and back drainage) is expected when the dry pipe valve and quick-opening device are set, except where design features of the particular quick-opening device make these requirements unnecessary.

Special circumstances can require a quick-opening device, such as an accelerator, to be located at a point remote from the dry pipe valve. In these instances, consideration should be given to protection of the device or its components against freezing. Remote devices should be accessible for servicing.

Antiflooding devices associated with a dry pipe valve accelerator are activated when the dry pipe valve trips. The devices do not stop operating parts from being submerged in the priming water.

8.2.4.4 Where a valve is installed in the connection between a dry pipe sprinkler riser and a quick-opening device, it shall be an indicating-type valve that is sealed, locked, or electrically supervised in the open position.

A shutoff valve is required between the dry pipe sprinkler riser and a mechanical-type quick-opening device, since these devices require separate maintenance activities that can include isolation from system air pressure to facilitate resetting. The shutoff valve allows removal of a device without having to take the dry pipe system out of service. However, for those quick-opening devices that can be shut off separately, the potential that they could be accidentally left closed exists — resulting in the accelerator being left out of service. Previously, a soft disc globe or angle valve was all that was required, but the 2007 edition required that an indicating type of valve be used to help facilitate it being supervised in the open position. It should be noted that an electrical type of accelerator does not require a shutoff valve.

8.2.4.5 A check valve shall be installed between the quick-opening device and the intermediate chamber of the dry pipe valve, where the quick-opening device requires protection against submergence after system operation.

EDUFIRE.IR

8.2.4.6 If the quick-opening device requires pressure feedback from the intermediate chamber, a valve type that will clearly indicate whether it is opened or closed shall be permitted in place of that check valve.

8.2.4.7 Where a valve is utilized in accordance with 8.2.4.6, the valve shall be constructed so that it can be locked or sealed in the open position.

The shutoff valve for a quick-opening device that requires pressure feedback from the intermediate chamber is much the same as the shutoff valve at the connection to the sprinkler riser. The valve should always be maintained in the open position. The check valve allows flow only from the quick-opening device to the intermediate chamber.

8.2.4.8 Antiflooding Device.

8.2.4.8.1 Unless the requirements of 8.2.4.8.2 are met, a listed antiflooding device shall be installed in the connection between the dry pipe sprinkler riser and the quick-opening device.

8.2.4.8.2 A listed antiflooding device shall not be required where the quick-opening device has built-in antiflooding design features or the quick-opening device is listed or approved without the use of an antiflooding device.

SEE ALSO

NFPA 25 for a series of inspection, testing, and maintenance provisions that, when implemented, greatly improve the reliability of quick-opening devices on their accessory equipment.

Quick-opening devices and their accessory equipment, such as antiflooding devices, are often neglected when service and maintenance activities on the system are conducted. Some quick-opening devices are designed to be used without an antiflooding device. In this case, if the quick-opening device is listed or approved without such a device, the antiflooding device can be omitted. The manufacturer's instructions need to be carefully followed for resetting each dry pipe valve and quick-opening device. Improper draining of the equipment while resetting the dry pipe valve after it has operated can result in impairments to the quick-opening device.

8.2.5* Location and Protection of Dry Pipe Valve.

A.8.2.5 The dry pipe valve should be located in an accessible place near the sprinkler system it controls. Where exposed to cold, the dry pipe valve should be located in a valve room or enclosure of adequate size to properly service equipment.

The recommendations in A.8.2.5 serve to reduce the amount of piping in a dry pipe system and to help minimize system capacity. Long bulk mains from dry pipe valves to system piping can use a large portion of the available system capacity, which results in a rather small area of actual sprinkler coverage. This practice is not prohibited, provided that required trip times can be met. To minimize the impact of the bulk main on the system's permitted capacity or water delivery time requirement, options such as the installation of the bulk main as underground piping below floors or the relocation of the dry pipe valve to the center of the building are sometimes considered.

However, 6.4.3.2 places limitations on the installation of fire mains beneath buildings. Any leaks in the buried piping underneath a building could go undetected for long periods, and any corrective action would require penetration of the floor and relocation of adjacent equipment. The location of system valves in the center of a building also places the system controls in the center of the building, which may not be desirable during a fire or acceptable to the authority having jurisdiction.

8.2.5.1* General. The dry pipe valve and supply pipe shall be protected against freezing and mechanical injury.

A.8.2.5.1 The dry pipe valve and supply piping should be in an area maintained at or above 40°F (4°C). It is the intent of the committee to protect the valves from freezing. The occasional exposure of valves to short exposures of air temperatures below 40°F (4°C) that would not cause the valves to freeze does not justify the construction of a valve room.

EDUFIRE.IR

8.2.5.2 Valve Rooms.

8.2.5.2.1 Valve rooms shall be lighted and heated.

8.2.5.2.2 The source of heat shall be of a permanently installed type.

8.2.5.2.3 Heat tape shall not be used in lieu of heated valve enclosures to protect the dry pipe valve and supply pipe against freezing.

8.2.5.3 Supply. The supply for the sprinkler in the dry pipe valve enclosure shall be either from the dry side of the system or from a wet pipe sprinkler system that protects the area where the dry pipe valve is located.

FAQ [8.2.5.3]

Can heat tape be used to heat the dry pipe valve and riser?

Heat tape is not considered a permanently installed heat source for heating the dry pipe valve and riser. A fixed heat source, such as a baseboard or unit heater, satisfies the requirements.

8.2.5.4 High Water Level Protection.

8.2.5.4.1 Where it is possible to reseat the dry valve after actuation without first draining the system, protection against occurrence of water above the clapper shall be permitted in accordance with 8.2.5.4.3.

8.2.5.4.2 Differential Dry Pipe Valve. Protection against accumulation of water above the clapper shall be provided for differential dry pipe valves in accordance with 8.2.5.4.3.

8.2.5.4.3 High Water Level Device. An automatic high water level signaling device or an automatic drain shall be permitted.

The requirements in 8.2.5.4.1, 8.2.5.4.2, and 8.2.5.4.3 are critical for three reasons. The first reason is that, if an accumulation of water extends beyond the heated enclosure, the potential for the system to freeze increases. The second reason is that a water column with a measurable head of pressure can develop, preventing operation of the dry pipe valve. Due to the differential pressure relationship between the system air pressure and the water supply pressure, the pressure of the water column can be sufficient to prevent the valve from opening. The third reason is that if the water column is above the connection for the air supply, small quantities of water can get past the check valve when it opens to add air to the system, potentially damaging riser and base-mounted compressors.

8.2.6 Air Pressure and Supply.

Proper air pressure, which is addressed in 8.2.6, should be maintained in the system at all times. It is important to follow the manufacturer's instructions regarding the range of air pressures to be maintained. Low air pressures could result in accidental operation of the dry pipe valve. High air pressures result in slower operation, because additional air must be expelled from the system before water can be delivered to open sprinklers.

Traditional dry pipe valves normally have a differential in water pressure to air pressure at a trip point of approximately 5.5:1. This pressure differential exists across the internal clapper assembly. A low pressure dry pipe valve has a pressure ratio across the internal clapper assembly of approximately 1.1:1 and is a latched assembly with an external actuator.

8.2.6.1 Where the term *air* is used throughout this standard, it shall also include the use of nitrogen or other approved gas.

The phrase "or other approved gas" was added to allow the option for another suitable gas to be used in the system. The use of nitrogen from a tank with a regulator is an option when electrical power is not readily available. A nitrogen generator or an air compressor with a dryer may be preferable in systems where severe accumulation of condensation from air in the system is likely. Care should be exercised to ensure that the supplied nitrogen is adequately dry.

Air pressure does not have to be automatically maintained or electrically supervised. The presence of such supervision, however, does minimize the frequency of maintenance inspections.

EDUFIRE.IR

8.2.6.2 Maintenance of Air Pressure. Air or nitrogen or other approved gas pressure shall be maintained on dry pipe systems throughout the year.

In many warmer climates, dry systems are still commonly used since freezing temperatures might occur once or twice annually. It is prohibited to turn the dry system into a wet system during the warmer months.

8.2.6.3* Air Supply.

A reliable and available air supply is necessary to allow the dry pipe system to stay in service and to maintain the necessary pressure differential between the water side and the air side of the dry pipe valve. A compressor, a shop air supply, a nitrogen generator, or a manifold arrangement of nitrogen cylinders each constitutes an acceptable source. The air maintenance device, if present, can be bypassed to meet the 30-minute filling criterion.

A.8.2.6.3 The compressor should draw its air supply from within the operating criteria allowed by the manufacturer of the compressor. Air piping should not be attached to the intake of the compressor unless acceptable to the compressor manufacturer and installed in accordance with 8.8.2.7. Damage, air reduction, or reduced life expectancy can result if guidelines are not followed.

8.2.6.3.1 The compressed air supply shall be from a source available at all times.

8.2.6.3.2* The air supply shall have a capacity capable of restoring normal air pressure in the system within 30 minutes.

A single air compressor supplying multiple dry pipe systems is not expected to restore all systems simultaneously. When a single air compressor is supplying multiple systems, each system is required to have an individual air maintenance device, as required by 8.2.6.6.3.1. Where a system is subdivided using check valves, the entire system served by the dry valve is still required to be brought to system pressure in 30 minutes.

A.8.2.6.3.2 When a single compressor serves multiple dry pipe systems, the 30-minute fill time is based on the single largest system.

8.2.6.3.3 The requirements of 8.2.6.3.2 shall not apply in refrigerated spaces maintained below 5°F (–15°C), where normal system air pressure shall be permitted to be restored within 60 minutes.

8.2.6.4 Air Supply Connections.

8.2.6.4.1* The connection from the air supply to the dry pipe valve shall not be less than ½ in. (15 mm) in diameter and shall enter the system above the priming water level of the dry pipe valve.

Some manufacturers provide connections other than rigid piping to connect riser-mounted compressors. Provided these hoses are of a sufficient diameter, they are acceptable.

N **A.8.2.6.4.1** The connection from an air compressor to the dry pipe valve should be of a type recommended by the manufacturer and approved by the authority having jurisdiction, taking into consideration the pressures, temperatures, and vibrations that the connection and adjacent equipment will endure. Flexible hose should be considered suitable when capable of withstanding expected vibration, a maximum pressure of 175 psi (12 bar) or greater, and a maximum temperature of 150°F (66°C) or greater.

8.2.6.4.2 A check valve shall be installed in the air filling connection.

8.2.6.4.2.1 A listed or approved shutoff valve of either the renewable disc or ball valve type shall be installed on the supply side of this check valve.

EDUFIRE.IR

8.2.6.5 Relief Valve. An approved relief valve shall be provided between the air supply and the shutoff valve and shall be set to relieve pressure no less than 10 psi (0.7 bar) in excess of system air pressure provided in 8.2.6.7.1 and shall not exceed the manufacturer's limitations.

A relief valve on manually operated systems is needed to reduce any excess air pressure in the system. Omission of the relief valve could result in higher pressures, thus resulting in slower operating times. Additionally, high pressures have the potential to damage the dry pipe valve. Air maintenance devices, if installed, also provide control of the pressure level. (See 8.2.6.6.)

Setting the relief valve within 5 psi (0.3 bar) of the maximum air pressure on the system results in the relief valve opening when not required. Setting the value to 10 psi (0.7 bar) allows for small fluctuations in air pressure without opening the relief valve, while at the same time ensuring that the system is not overpressurized to the point that the dry pipe valve does not open or is damaged. Some compressors are equipped by the manufacturer with a relief valve.

8.2.6.6 Automatic Air Maintenance.

8.2.6.6.1* Unless the requirements of 8.2.6.6.2 are met, where the air supply to a dry pipe system is maintained automatically, the air supply shall be from a dependable plant system or an air compressor with an air receiver, and shall utilize an air maintenance device specifically listed for such service and capable of controlling the required air pressure on, and maximum airflow to, the dry pipe system.

While NFPA 13 does not require the use of a device to automatically maintain air pressure in the system, other means of maintaining the required air pressure can become overburdensome. The preferable method is to maintain the air pressure automatically. Although NFPA 13 requires that the air maintenance device be listed, NFPA 13 does not require that the compressor utilized to provide the air supply be listed.

FAQ [8.2.6.6.1]

Are the air maintenance device and the air compressor required to be listed?

Air compressors, nitrogen generators, and other air supply sources are not required to be listed. However, devices used for automatic air maintenance between the air supply and the dry pipe system need to be listed for such service. Listed air maintenance devices provide both restriction of the airflow and regulation of the air pressure when the system is not being filled.

A.8.2.6.6.1 Air maintenance devices are unique components within the air supply and need to be listed for use. Compressors are not air maintenance devices and this section does not require air compressors to be listed.

8.2.6.6.2 Where the air compressor supplying the dry pipe system has a capacity less than 5.5 ft^3/min (160 L/min) at 10 psi (0.7 bar), an air receiver or air maintenance device shall not be required.

Pumping air directly from an automatic air compressor through a fully opened supply pipe into the sprinkler system is permitted only for small capacity compressors. Almost all compressors that do not have an air maintenance device will be the riser mounted–type. With larger flow capacities, a restriction prevents the air supply system from adding air too quickly, thus preventing or slowing operation of the dry pipe valve.

8.2.6.6.3 The automatic air supply to more than one dry pipe system shall be connected to enable individual maintenance of air pressure in each system.

8.2.6.6.3.1 Each dry pipe system shall have a dedicated air maintenance device.

Paragraph 8.2.6.6.3.1 was added in the 2016 edition to provide clarification that, if an air maintenance device is provided, it must service only a single dry system. This paragraph does not mandate that an air maintenance device be provided for every dry system when they are allowed to be omitted by 8.2.6.6.2.

8.2.6.6.4 A check valve or other positive backflow prevention device shall be installed in the air supply to each system to prevent airflow or waterflow from one system to another.

Paragraphs 8.2.6.6.3 and 8.2.6.6.4 address system applications where multiple dry pipe systems are utilized and are supplied by a single air source. Where an automatic supply is utilized, 8.2.6.6.3 requires that each system be individually maintained to address differences in air leakage and system size influences, such as temperature fluctuation affecting only one system. Where multiple systems are interconnected for air supply, a check valve or other positive backflow prevention device is required by 8.2.6.6.4 to ensure that air will

EDUFIRE.IR

not flow between the systems and, in the event of system operation, water will not flow into an adjacent dry pipe system that has not activated.

Air compressors are available for use with and without air holding tanks. Compressors without air holding tanks are subject to more instances of short-cycling of the compressor. Exhibit 8.7 illustrates an air compressor without an air holding tank and an automatic air maintenance device. A compressor needs to comply only with the requirements of 8.2.6.3 and does not have to be listed.

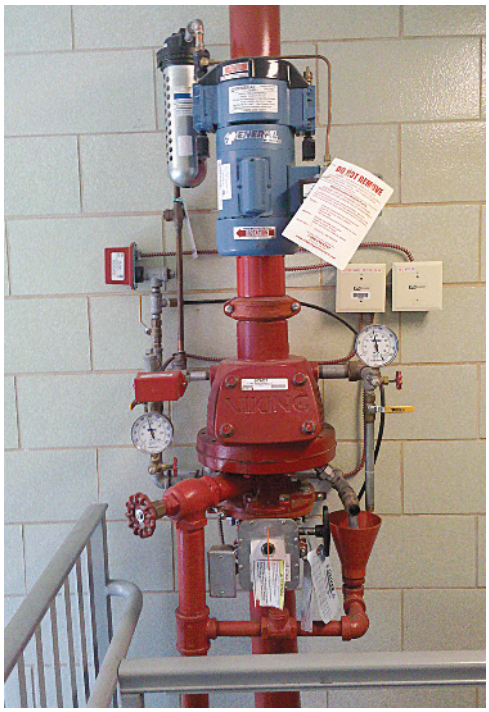

EXHIBIT 8.7 *Air Compressor and Air Maintenance Device for Dry Pipe System. (Courtesy of General Air Products, Inc.)*

8.2.6.6.5 Where an air compressor is the dedicated air supply, it shall be installed in accordance with *NFPA 70*, Article 430.

8.2.6.6.5.1 The disconnecting means for an automatic air compressor shall not be a general-use light switch or a cord-and-plug connected motor.

The requirements in 8.2.6.6.5 and 8.2.6.6.5.1 are new for the 2019 edition. When an air compressor or nitrogen generator is a dedicated air supply for a dry system, the wiring must meet the requirements in *NFPA 70®, National Electrical Code®*, including the correct wire size and installation method. There is an additional restriction that the compressor must not be wired through a light switch or use a plug into a wall outlet.

Many false trips of a dry system are a result of the air compressor being inadvertently turned off or unplugged. These new requirements are meant to help reduce the frequency of false trips.

8.2.6.7 System Air Pressure.

8.2.6.7.1 The system air pressure shall be maintained in accordance with the instruction sheet furnished with the dry pipe valve, or shall be 20 psi (1.4 bar) in excess of the calculated trip pressure of the dry pipe valve, based on the highest normal water pressure of the system supply.

There are nondifferential dry valves available to the industry that are capable of holding back the maximum rated water pressure of the valves' listing with air pressures lower than 20 psi (1.4 bar). All manufacturers of listed dry valves currently on the market provide guidance on how to properly set the dry valve, including the necessary air pressure.

EDUFIRE.IR

8.2.6.7.2 The permitted rate of air leakage shall be as specified in 28.2.2.

8.2.6.8 Nitrogen or Other Approved Gas.

8.2.6.8.1* Where nitrogen or other approved gas is used, the supply shall be from a reliable source.

A.8.2.6.8.1 The nitrogen or other approved gas can be either generated on site or from storage containers, sized to provide a reliable supply for at least 6 months of expected maintenance use.

8.2.6.8.2 Where stored nitrogen or other approved gas is used, the gas shall be introduced through a pressure regulator and shall be in accordance with 8.2.6.6.

8.2.6.8.3 A low pressure alarm shall be provided on gas storage containers to notify the need for refilling.

The use of nitrogen in dry systems is becoming more and more common. The benefit of nitrogen is that it is an inert gas; therefore, the occurrence of corrosion is reduced in the piping system.

N **8.2.6.8.4*** When nitrogen or other approved gas is the only source of gas for pressurizing a system, it shall have a capacity capable of restoring normal gas pressure in the system within 30 minutes.

N **A.8.2.6.8.4** When a single nitrogen or other approved gas source serves multiple dry pipe systems, the 30-minute fill time is based on the single largest system.

N **8.2.6.8.5** The requirements of 8.2.6.8.4 shall not apply in refrigerated spaces maintained below 5°F (−15°C), where normal system air pressure shall be permitted to be restored within 60 minutes.

8.3 Preaction Systems and Deluge Systems.

8.3.1* General.

A.8.3.1 Conditions of occupancy or special hazards might require quick application of large quantities of water, and, in such cases, deluge systems might be needed.

Fire detection devices should be selected to ensure operation yet guard against premature operation of sprinklers based on normal room temperatures and draft conditions.

In locations where ambient temperature at the ceiling is high from heat sources other than fire conditions, heat-responsive devices that operate at higher than ordinary temperature and that are capable of withstanding the normal high temperature for long periods of time should be selected.

Where corrosive conditions exist, materials or protective coatings that resist corrosion should be used.

To help avoid ice formation in piping due to accidental tripping of dry pipe valves in cold storage rooms, a deluge automatic water control valve can be used on the supply side of the dry pipe valve. Where this method is employed, the following also apply:

(1) Dry systems can be manifolded to a deluge valve, with the protected area not exceeding 40,000 ft^2 (3720 m^2).
(2) Where a dry system is manifolded to a deluge valve, the distance between valves should be as short as possible to minimize water hammer.
(3) The dry pipe valves should be pressurized to 50 psi (3.4 bar) to reduce the possibility of dry pipe valve operation from water hammer.

FAQ [8.3]

Do the rules of dry pipe systems apply to double interlock preaction systems?

The operating characteristics of these valves cause certain types of preaction systems to have qualities similar to those of a dry pipe system, such as a double interlock preaction system. Therefore, the same rules and restrictions that apply to dry pipe systems apply to double interlock preaction systems.

EDUFIRE.IR

The combination dry pipe and deluge valve was one of the older approaches for a double interlock preaction valve. Current designs use a single valve.

8.3.1.1* All components of pneumatic, hydraulic, or electrical systems shall be compatible.

A.8.3.1.1 When using electrical operating methods to actuate preaction systems and deluge systems, care should be observed in selecting the solenoid valve. This valve must be compatible with the fire detection system, including its control panel, and the preaction or deluge valve. This often involves listing with both the preaction or deluge valve manufacturer and the fire detection system manufacturer. Information regarding solenoid compatibility is included in the releasing device (panel) installation instructions.

Small preaction and deluge systems with and without separate electrical-based detection and control panels have been installed prior to the introduction of the detection system requirements of *NFPA 72*. Pneumatic-based actuation using heat-actuated devices (HADs), pneumatic line–type detection, and pilot sprinklers are examples of non-electric-based detectors and control devices. NFPA 13 recognizes the use and installation of these types of systems and provides guidance in producing a reliable detection and suppression system combination. Remote manual operation of combined dry pipe and preaction systems is needed because of the often very long length dimension of such systems and the long travel time to reach the control valves. Such remote manual operation speeds water into the piping network.

The requirement in 8.3.1.1 and the text of A.8.3.1.1 address compatibility to ensure that all system components function as an integrated unit. The correct coordination of the detection devices, the releasing equipment, and the control panel is imperative for prompt and reliable operation of the system. Specific requirements on the design of hydraulic, pneumatic, and electrical detection systems are contained in *NFPA 72*. The releasing panel or module is an essential component for system operation and is required to be listed, in accordance with 7.1.1.2.

8.3.1.2 The automatic water control valve shall be provided with hydraulic, pneumatic, or mechanical manual means for operation that is independent of detection devices and of the sprinklers.

In the event that the system does not automatically operate, a means for manually operating the system activation valve must be provided. This feature is usually standard on valves listed for use in preaction or deluge systems. The manual release device must be a stand-alone arrangement in which operation is ensured, regardless of the potential failure of the associated detection system.

N **8.3.1.2.1 Actuator Supervision.** Effective January 1, 2021, removal of an electric actuator from the preaction or deluge valve that it controls shall result in an audible and visual indication of system impairment at the system releasing control panel.

This requirement is new for the 2019 edition. When periodic tests of preaction systems are performed in accordance with NFPA 25 for the sprinkler system portion (and in accordance with *NFPA 72* for the detection system), it has been common practice to disassemble the solenoid valve that actuates the preaction or deluge valve to prevent false alarms and trips. Unfortunately, the solenoid valves are not always reassembled after the test, resulting in a system impairment. NFPA 25 now requires that the entire system — including the detection system — be tested as a unit, which should help eliminate this problem. However, the NFPA 13 technical committees recognized the need to add an additional safeguard to the standard if the solenoid is disassembled for any reason by requiring an audible and visible indication of the condition at the releasing panel.

The effective date of the requirement was added to allow manufacturers time to design a method to accomplish this new requirement and obtain a listing.

EDUFIRE.IR

8.3.1.3 Pressure Gauges. Approved pressure gauges conforming with Section 16.13 shall be installed as follows:

(1) Above and below preaction valve and below deluge valve
(2) On air supply to preaction and deluge valves

8.3.1.4 A supply of spare fusible elements for heat-responsive devices, not less than two of each temperature rating, shall be maintained on the premises for replacement purposes.

8.3.1.5 Hydraulic release systems shall be designed and installed in accordance with manufacturer's requirements and listing for height limitations above deluge valves or deluge valve actuators to prevent water column.

8.3.1.6 Location and Spacing of Releasing Devices.

8.3.1.6.1 Spacing of releasing devices, including automatic sprinklers used as releasing devices, shall be in accordance with their listing and manufacturer' specifications.

8.3.1.6.2 The release system shall serve all areas that the preaction system protects.

8.3.1.6.3 Where thermal activation is utilized, the activation temperature of the release system shall be lower than the activation temperature of the sprinkler.

The design requirements of NFPA 13 assume that the releasing system will activate before the sprinkler system. For additional information on releasing systems and thermal sensitivity, see A.19.3.3.2.5.

Various methods are available for activating a deluge or preaction system. Among these methods are pneumatic and hydraulic detection systems, smoke detectors, heat detectors, and detectors that respond to ultraviolet and infrared radiation. An automatic sprinkler is also recognized as a type of detector that can be used to activate an adjacent preaction or deluge system.

Although the definition of the term *sprinkler system* (see 3.3.206) states that these systems are "commonly activated by heat," this definition should not be interpreted as prohibiting the use of smoke detection devices or other non-heat-sensing devices. Smoke and ultraviolet and infrared radiation are by-products of a fire, and their detection can be used to activate a preaction or deluge system.

Whatever detection system is used, it must be installed in accordance with its listing or as directed by the detection device manufacturer. The listing criteria for the detection devices are governed by *NFPA 72*.

In addition to permitting a range of options concerning types of detection devices, various combinations of operation are permitted. See the commentary following 8.3.2.1.

8.3.1.7 Devices for Test Purposes and Testing Apparatus.

8.3.1.7.1 Where detection devices installed in circuits are located where not accessible for testing, an additional detection device shall be provided on each circuit for test purposes at an accessible location and shall be connected to the circuit at a point that will ensure a proper test of the circuit.

8.3.1.7.2 Testing apparatus capable of producing the heat or impulse necessary to operate any normal detection device shall be furnished to the owner of the property with each installation.

8.3.1.7.3 Where explosive vapors or materials are present, hot water, steam, or other methods of testing not involving an ignition source shall be used.

8.3.1.7.4* A separate additional indicating control valve, supervised in accordance with 16.9.3.3, shall be permitted to be installed in the riser assembly above a preaction or deluge valve to permit full function trip testing as required by NFPA 25, without flooding the system.

A.8.3.1.7.4 Preaction and deluge valves should be fully trip tested wherever possible. Providing a functional trip test without waterflow does not reveal other potential problems such as obstructions and/or misaligned nozzles.

EDUFIRE.IR

8.3.1.8 Location and Protection of System Water Control Valves.

8.3.1.8.1 System water control valves and supply pipes shall be protected against freezing and mechanical injury.

8.3.1.8.2 Valve Rooms.

8.3.1.8.2.1 Valve rooms shall be lighted and heated.

8.3.1.8.2.2 The source of heat shall be of a permanently installed type.

8.3.1.8.2.3 Heat tracing shall not be used in lieu of heated valve enclosure rooms to protect preaction and deluge valves and supply pipe against freezing.

FAQ [8.3.1.8.2.3]

Can heat tracing be utilized to heat the preaction and deluge valve and riser?

Heat tracing is not considered a permanently installed heat source. A fixed heat source, such as a baseboard or unit heater, satisfies the requirements.

8.3.2 Preaction Systems.

Subsection 8.3.2 identifies the three basic types of preaction systems by identifying their means of operation. Specific terms that identify the mode of operation, such as *single interlock, non-interlock,* and *double interlock,* help differentiate among types of systems and allow for better reference. In addition to the three basic types of systems, variations, such as the use of a cross-zoned smoke detection system, are possible. Other combinations can involve the use of additional devices, such as an infrared detector. The detection systems for the single interlock and non-interlock systems typically have a lower temperature rating than the system sprinklers. When so configured, the single interlock and non-interlock systems are expected to operate more quickly than the double interlock or dry pipe systems. Exhibit 3.47 illustrates an example of a double interlock preaction system with electric activation.

8.3.2.1 Preaction systems shall be one of the following types:

(1) A single interlock system, which admits water to sprinkler piping upon operation of detection devices
(2) A non-interlock system, which admits water to sprinkler piping upon operation of detection devices or automatic sprinklers
(3) A double interlock system, which admits water to sprinkler piping upon operation of both detection devices and automatic sprinklers

Both the single interlock and non-interlock systems require only one event to occur before water is admitted to the system. The single interlock system is activated by the release of the detection system. Sprinkler activation does not affect this function. The non-interlock system is activated if either the detection system or a sprinkler operates.

The double interlock preaction system requires two events to occur before water is admitted to the system. One event consists of the activation of a device installed on the supplemental detection system. The other event includes the operation of a sprinkler that causes the maintained air pressure in the system to fall to a predetermined level, which is similar to the operation of a dry pipe system. When one of these events occurs, the system activation valve goes into a preset position. When the second event occurs, the valve opens, and water enters the system. These two events can occur in any order and result in the same outcome.

8.3.2.2 Size of Systems — Single and Non-Interlock Preaction Systems. Not more than 1000 automatic sprinklers shall be controlled by any one preaction valve.

The size of single interlock or non-interlock system is restricted to not more than 1000 sprinklers. These systems are provided with an overall restriction to limit the total area protected by any single preaction system. The system area limitations of 4.5.1 are not permitted to be exceeded due to the requirements of 8.3.2.2. In some cases, fewer than 1000 sprinklers will protect an area that exceeds the limits of 4.5.1. In such cases, the number of sprinklers will be limited to the number of sprinklers protecting an area equal to or less than the limits of 4.5.1.

EDUFIRE.IR

8.3.2.3 Size of Systems — Double Interlock Preaction Systems.

Because of the need to wait for the drop in air pressure, a double interlock system has characteristics similar to those of a dry pipe system. Double interlock preaction systems maintain air pressures similar to those found on dry pipe systems and, therefore, require the same restrictions as dry pipe systems. The restrictions include the 30 percent increase in design area (see 19.3.3.2.5), maximum discharge times for a system capacity larger than 500 gal (1900 L), and the prohibition of the gridded piping arrangement (see 8.2.3.10).

NFPA 13 contains specific requirements to address sizing of dry pipe systems and double interlock preaction systems. Specifically, for double interlock preaction systems, these requirements provide multiple methods for determining acceptable size limits based on required water delivery times. Acceptable options for sizing of systems are provided in 8.3.2.3.1.1, 8.3.2.3.1.2, 8.3.2.3.1.3, and 8.3.2.3.1.4.

DESIGNER'S CORNER [8.3.2.3]

Can double interlock preaction systems be used in computer rooms, museums, or art galleries?

Double interlock preaction systems were not designed for use in that type of occupancy, and it would not be a good use of such systems.

Double interlock preaction systems were designed to be used in freezer storage warehouse conditions where the consequences of getting water into the piping are severe. If water gets into a freezer's piping system, it quickly becomes ice and the only way to remove the ice is to warm up the freezer or disassemble the pipe and take it outside. Taking an entire freezer warehouse out of service to heat the piping is incredibly expensive — as is taking each piece of pipe outside. So, a method had to be found that ensured water entered the pipe only in the event of an actual fire — hence the development of the double interlock system.

In computer rooms, museums, art galleries, and other places sensitive to the discharge of water, the consequences of getting water into the piping are not as severe as in the freezer example. A single interlock preaction system in accordance with 8.3.2.1(1) can be installed. If the alarm system malfunctions and trips the preaction valve, the water will remain in the piping and not discharge from the system because the alarms do not cause the sprinklers to open. Piping integrity can be monitored with air or nitrogen under pressure to ensure that the piping has no leaks.

Double interlock preaction systems delay the application of water during a real fire event. The fire is allowed to intensify — and do more damage — before water discharges. These systems also open more sprinklers, causing more water damage than single interlock systems. While objects exposed to sprinkler discharge water can be repaired and restored much more easily than objects that have burned up, it still makes sense to try and minimize the damage.

Single interlock preaction systems can be designed so that water arrives at the sprinkler much more quickly than it would in a double interlock system, thereby minimizing the size of the fire and the resulting damage. In addition, if a sprinkler breaks, the room will remain dry, because the detection system will allow water into the piping only in the event of an actual fire.

NFPA 13 does not prohibit the use of double interlock preaction systems for computer rooms, museums, art galleries, and other places where the room temperature will be above freezing and water application in non-fire conditions is sensitive. However, single interlock preaction systems are a much better solution for protecting these types of spaces. The designer should understand all the pros and cons of the two options before choosing a system.

8.3.2.3.1 The system size controlled by a double interlock preaction valve shall be determined by either 8.3.2.3.1.1, 8.3.2.3.1.2, 8.3.2.3.1.3, or 8.3.2.3.1.4.

8.3.2.3.1.1 A system size for double interlock preaction systems of not more than 500 gal (1900 L) shall be permitted and shall not be required to meet any specific water delivery requirement to the trip test connection.

Just like a dry pipe system, there is no time restriction on water delivery when the double interlock preaction system capacity is less than 500 gal (1900 L).

8.3.2.3.1.2 The system size for double interlock preaction systems shall be designed to deliver water to the system test connection in no more than 60 seconds, starting at the normal air pressure on the system, with the detection system activated and the inspection test connection fully opened simultaneously.

EDUFIRE.IR

For systems larger than 500 gal (1900 L), 8.3.2.3.1.2 permits all double interlock preaction systems to be sized such that water delivery to the system test connection occurs within 60 seconds. Unlike dry systems larger than 500 gal (1900 L) up to 750 gal (2850 L), there is no allowance to ignore the 60-second requirement where a quick-opening device is provided. This option assumes the traditional inspector's test connection arrangement at the most remote branch line at the highest elevation of the branch line.

8.3.2.3.1.3 The system size for double interlock preaction systems shall be based on calculating water delivery in accordance with 8.2.3.6, anticipating that the detection system activation and sprinkler operation will be simultaneous.

Paragraph 8.3.2.3.1.3 provides another option by permitting the designer to size the double interlock preaction system based on the calculated water delivery method as described in 8.2.3.6 using a listed program.

8.3.2.3.1.4* The system size for double interlock preaction systems shall be designed to deliver water to the system trip test connection or manifold outlets in not more than the maximum time of water delivery specified in Table 8.2.3.6.1, starting at the normal air pressure on the system, with the detection system activated and the inspection trip test connection or manifold opened simultaneously.

Paragraph 8.3.2.3.1.4 provides a third option that permits the designer to install a test manifold connection arranged to comply with Table 8.2.3.6.1. This option permits the designer to flow multiple test orifices when evaluating the assigned durations. This method is not intended to be installed to verify calculated water delivery as allowed by 8.3.2.3.1.3.

A.8.3.2.3.1.4 Although the time criterion for calculated systems is not required, a test is still required to document the initial water delivery for comparison to future inspection test requirements. If the time of a single sprinkler test outlet exceeds 70 seconds, evaluation of the calculations and the system installation might be necessary.

8.3.2.3.2 A listed quick-opening device shall be permitted to be used to help meet the requirements of 8.3.2.3.1.2, 8.3.2.3.1.3, and 8.3.2.3.1.4.

8.3.2.4* Supervision.

A.8.3.2.4 Supervision, either electrical or mechanical, as used in 8.3.2.4 refers to constant monitoring of piping and detection equipment to ensure the integrity of the system. Detection devices of listed flow cycling assemblies that cause an alarm during a single open or a single ground fault condition should be considered to satisfy the supervision requirement.

The term *supervision* in A.8.3.2.4 refers to a method of ensuring the overall integrity of the piping system. Pressurized air usually is introduced to the preaction system pipe network. A loss in air pressure indicates a sprinkler activation or a major leak in the system. Normal supervision status registers that the system piping and sprinklers are intact. This reading, however, is not meant to verify that the system is completely free of minor leaks. The air compressor and the air maintenance device could be able to maintain the necessary air pressure, even where minor leaks exist.

A single interlock preaction system, as described in 8.3.2.1(1), that has more than 20 sprinklers is still required to be supervised, but not at a minimum pressure. A 7 psi (0.5 bar) minimum is required on the non-interlock and double interlock systems, since they can operate similarly to a dry pipe system in that water delivery time to the open sprinklers is delayed. The minimum supervisory pressure is necessary for proper operation of the sprinkler. Proper operation entails both the lifting of the cap so the air escapes and the clearing of the mechanisms so the water discharge pattern is not affected. A minimum operating pressure at the sprinkler is a critical part of the system's activation process.

EDUFIRE.IR

Supervision of the associated electronic detection devices is crucial, since loss or failure of the detection system to an open circuit or ground fault can render the entire preaction system inoperative.

Specifics on the supervision of fire detection system circuits, referred to as "monitoring the integrity of installation conductors," can be found in *NFPA 72*.

8.3.2.4.1 Sprinkler piping and fire detection devices shall be automatically supervised where more than 20 sprinklers are on the system.

8.3.2.4.2 Except as permitted by 8.3.2.4.3, air or nitrogen supervising pressure for preaction systems shall be installed in conformance with the dry pipe system air pressure and supply rules of 8.2.6.

8.3.2.4.3 The relief valves required by 8.2.6 shall be permitted to be omitted for the type of preaction system described in 8.3.2.1(1) when the air pressure is supplied from a source that is not capable of developing pressures in excess of 15 psi (1.0 bar).

8.3.2.4.4 All preaction system types described in 8.3.2.1(2) and 8.3.2.1(3) shall maintain a minimum supervising air or nitrogen pressure of 7 psi (0.5 bar).

8.3.2.5 Sprinklers. The following sprinkler orientations and arrangements shall be permitted for preaction systems:

(1) Upright sprinklers
(2)* Listed dry sprinklers
(3) Pendent sprinklers and sidewall sprinklers installed on return bends, where the sprinklers, return bend, and branch line piping are in an area maintained at or above 40°F (4°C)
(4) Horizontal sidewall sprinklers, installed so that water is not trapped
(5) Pendent sprinklers and sidewall sprinklers, where the sprinklers and branch line piping are in an area maintained at or above 40°F (4°C), the water supply is potable, and the piping for the preaction system is copper or CPVC specifically listed for dry pipe applications

A.8.3.2.5(2) See A.8.2.2(2).

See the commentary following 8.2.2 for more information on the use of dry sprinklers, sprinklers on return bends, sprinklers without return bends, and horizontal sidewall sprinklers on preaction systems, where the same issues associated with the use of such sprinklers on dry systems are applicable to their use in preaction systems.

8.3.2.6 System Configuration. Preaction systems of the type described in 8.3.2.1(3) and all preaction systems protecting storage occupancies, excluding miscellaneous storage, shall not be gridded.

FAQ [8.3.2.6]

Why are gridded double interlock preaction systems prohibited?

The restriction in 8.3.2.6 prohibiting a gridded pipe arrangement for double interlock preaction systems reduces the likelihood of substantial delay in the delivery of water to the open sprinklers. This paragraph also prohibits single interlock and non-interlock gridded systems that are utilized to protect storage. Before this paragraph prohibited their use, many contractors would use a single interlock preaction system in storage freezers. Since the pitching requirements and dry system design area increase were not applicable to single interlock and non-interlock systems, the use of these gridded systems provided an advantage.

8.3.3* Deluge Systems.

Deluge systems are normally used in very high hazard areas. These systems have properties similar to those of a preaction system, in that they rely on a supplemental detection system for operation. However, deluge systems use open sprinklers and, therefore, are open systems. NFPA 409, *Standard on Aircraft Hangars,* requires the installation of foam-water deluge systems in certain aircraft hangars. NFPA 13 does not limit the type of detection system to be used to activate a deluge system. Deluge systems can be operated by smoke, heat, ultraviolet (UV), or infrared (IR) detection systems. Exhibit 3.45 shows a schematic of a deluge system operated by electronic detectors. Exhibit 8.8 illustrates a deluge valve activated by a pneumatic dry pilot sprinkler line.

EDUFIRE.IR

EXHIBIT 8.8 Deluge Valves. (Courtesy of Viking Group, Inc.)

FAQ [8.3.3]

What is the correct area of operation when calculating a deluge sprinkler system?

Since all sprinklers are open, every sprinkler on the system discharges water simultaneously when the deluge valve operates. The determination of the system's area of operation is straightforward — it is the entire area protected by the deluge system.

A.8.3.3 Where 8 in. (200 mm) piping is employed to reduce friction losses in a system operated by fire detection devices, a 6 in. (150 mm) preaction or deluge valve and a 6 in. (150 mm) gate valve between tapered reducers should be permitted.

8.3.3.1 The detection devices or systems shall be automatically supervised.

8.3.3.2 Deluge systems shall be hydraulically calculated.

8.4 Combined Dry Pipe and Preaction Systems for Piers, Terminals, and Wharves.

Combined dry pipe and preaction systems are not as common as they were several decades ago. Such systems are intended to be applied to unusual structures, such as piers or wharves, which require unusually long runs of pipe.

8.4.1 In addition to the requirements of Section 8.4, design and installation requirements for piers, terminals, and wharves shall be in accordance with Section 26.22.

8.4.2* General.

A.8.4.2 Systems described by Section 8.4 are special types of noninterlocking preaction systems intended for use in, but not limited to, structures where a number of dry pipe valves would be required if a dry pipe system were installed. These systems are primarily used in piers and wharves.

EDUFIRE.IR

8.4.2.1* Combined automatic dry pipe and preaction systems shall be so constructed that failure of the detection system shall not prevent the system from functioning as a conventional automatic dry pipe system.

Conventional automatic operation of the dry pipe valve provides a highly reliable backup to the fire detection system. Since the primary purpose of the fire detection system is to cause piping to start filling sooner, loss of the detection system only results in a much slower operating mode. Although somewhat impaired, the system can still operate.

Quite the opposite effect from that covered in 8.4.2.1 results when the detection system operates but the dry pipe valve fails to open. With this type of failure, which is addressed in 8.4.2.2, no water flows to the piping system and sprinklers, and only the alarm activates.

A.8.4.2.1 See Figure A.8.4.2.1.

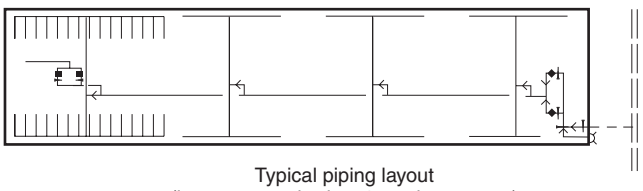

Typical piping layout
(in one-story shed — 4-section system)

FIGURE A.8.4.2.1 *Typical Piping Layout for Combined Dry Pipe and Preaction Sprinkler System.*

8.4.2.2 Combined automatic dry pipe and preaction systems shall be so constructed that failure of the dry pipe system of automatic sprinklers shall not prevent the detection system from properly functioning as an automatic fire alarm system.

8.4.2.3 Provisions shall be made for the manual operation of the detection system at locations requiring not more than 200 ft (61 m) of travel.

Manual operation of the fire detection system provides a prompt means of filling the system with water from remote locations throughout the protected area. Manual operation can be utilized in special circumstances where the danger of an incident is possible to fill the system piping so that, in the event of a fire, the system will operate as a wet pipe system.

8.4.2.4 Sprinklers. The following types of sprinklers and arrangements shall be permitted for combined dry pipe and preaction systems:

(1) Upright sprinklers
(2)* Listed dry sprinklers
(3) Pendent sprinklers and sidewall sprinklers installed on return bends, where both the sprinklers and the return bends are located in a heated area
(4) Horizontal sidewall sprinklers, installed so that water is not trapped

A.8.4.2.4(2) See A.8.2.2(2).

See the commentary following 8.2.2 for more information on the use of dry sprinklers, sprinklers on return bends, sprinklers without return bends, and horizontal sidewall sprinklers on preaction systems, where the same issues associated with the use of such sprinklers on dry systems are applicable to their use in preaction systems.

EDUFIRE.IR

8.4.3 Dry Pipe Valves in Combined Systems.

8.4.3.1 Where the system consists of more than 600 sprinklers or has more than 275 sprinklers in any fire area, the entire system shall be controlled through two 6 in. (150 mm) dry pipe valves connected in parallel and shall feed into a common feed main.

8.4.3.2* Where parallel dry pipe valves are required by 8.4.3.1, these valves shall be checked against each other.

Although each dry pipe valve in a combined system serves as a backup valve, simultaneous operation of both valves is desirable to increase the system's flow characteristics.

A.8.4.3.2 Figure A.8.4.3.2 is a depiction of a valve arrangement complying with 8.4.3.2.

8.4.3.3 Each dry pipe valve shall be provided with a listed tripping device actuated by the detection system.

8.4.3.4 Dry pipe valves shall be cross-connected through a 1 in. (25 mm) pipe connection to permit simultaneous tripping of both dry pipe valves.

8.4.3.5 The 1 in. (25 mm) cross-connection pipe shall be equipped with an indicating valve so that either dry pipe valve can be shut off and worked on while the other remains in service.

8.4.3.6 The check valves between the dry pipe valves and the common feed main shall be equipped with ½ in. (15 mm) bypasses so that a loss of air from leakage in the trimmings of a dry pipe valve will not cause the valve to trip until the pressure in the feed main is reduced to the tripping point.

8.4.3.7 An indicating valve shall be installed in each of these bypasses so that either dry pipe valve can be completely isolated from the main riser or feed main and from the other dry pipe valve.

8.4.3.8 Each combined dry pipe and preaction system shall be provided with listed quick-opening devices at the dry pipe valves.

8.4.4 Subdivision of System Using Check Valves.

8.4.4.1 Where more than 275 sprinklers are required in a single fire area, the system shall be divided into sections of 275 sprinklers or fewer by means of check valves.

8.4.4.2 Where the system is installed in more than one fire area or story, not more than 600 sprinklers shall be supplied through any one check valve.

8.4.4.3 Each section shall have a 1¼ in. (32 mm) drain on the system side of each check valve supplemented by a dry pipe system auxiliary drain.

8.4.4.4 Section drain lines and dry pipe system auxiliary drains shall be located in heated areas or inside heated cabinets to enclose drain valves and auxiliary drains for each section.

8.4.5 Time Limitation.

The requirements of 8.4.5 provide a cost-effective means to offset the large volume of air in combined dry pipe and preaction systems. The use of check valves is acceptable, since the system is a non-interlock preaction system, which is expected to be tripped by the detection system.

8.4.5.1 The sprinkler system shall be so constructed and the number of sprinklers controlled shall be so limited that water shall reach the farthest sprinkler within a period of time not exceeding 1 minute for each 400 ft (120 m) of common feed main from the time the heat-responsive system operates.

EDUFIRE.IR

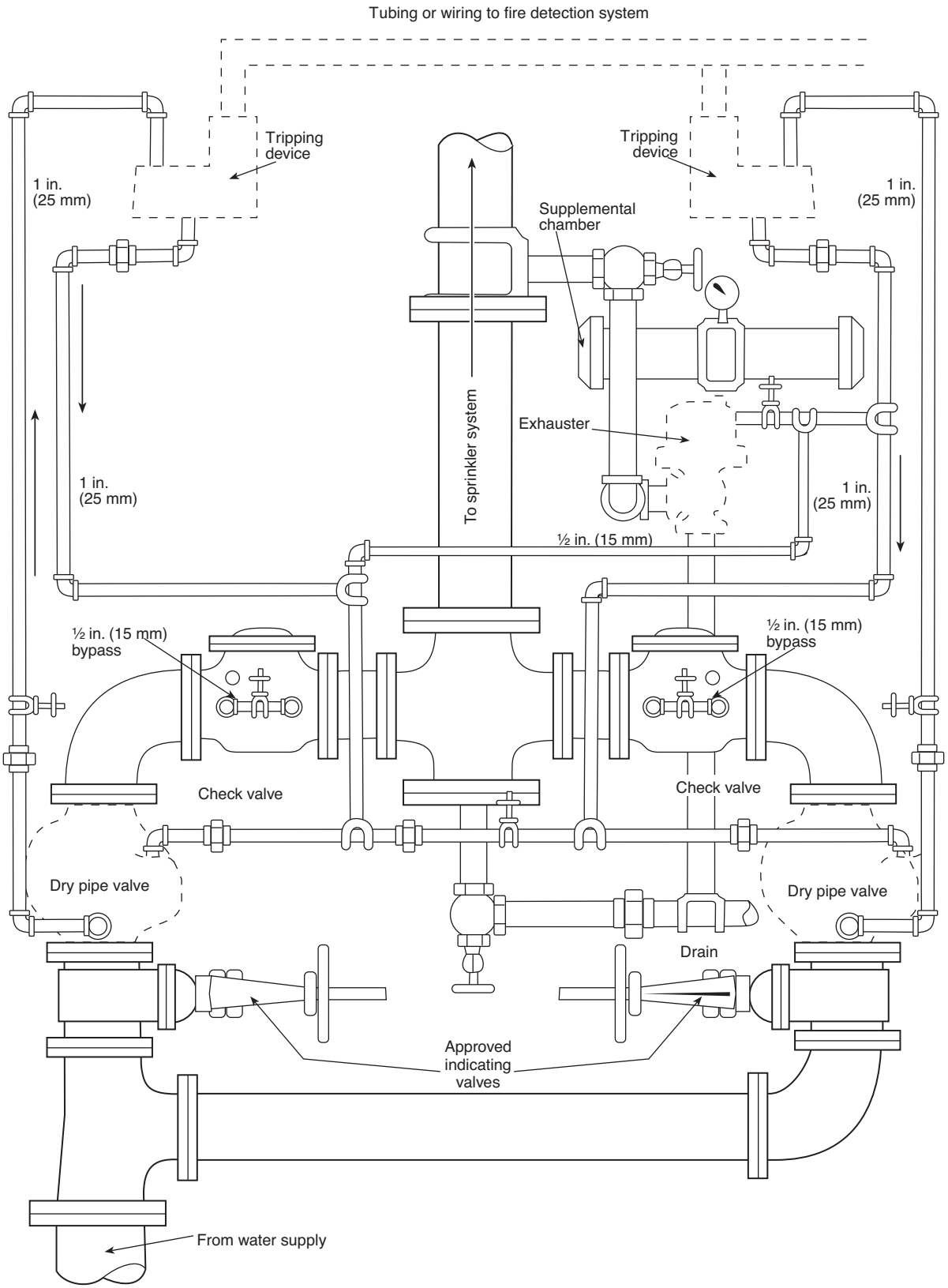

FIGURE A.8.4.3.2 *Header for Dry Pipe Valves Installed in Parallel for Combined Systems; Standard Trimmings Not Shown. Arrows Indicate Direction of Fluid Flow.*

Automatic Sprinkler Systems Handbook 2019

EDUFIRE.IR

8.4.5.2 The maximum time permitted shall not exceed 3 minutes.

8.4.6 System Test Connection. The end section shall have a system test connection as required for dry pipe systems.

Combined dry pipe and preaction systems have a combination of the features associated with both dry pipe and preaction systems and are intended for specific applications, as indicated in the commentary at the beginning of Section 8.4. The water delivery times associated with combined dry pipe and preaction systems, therefore, differ from those required for either dry pipe or preaction systems. Excessive delivery times for water should be reviewed with the authority having jurisdiction.

8.5 Multi-Cycle Systems.

As defined in 3.3.206.7, a multi-cycle system is one that is capable of repeated on–off flow cycles in response to heat. These systems are designed to operate (cycle) as many times as needed to control or extinguish a fire. The on-off flow cycle operation enables the system to reduce the overall volume of discharge, making it advantageous for use in facilities that are extremely sensitive to water discharge or that have a need for rapid restoration.

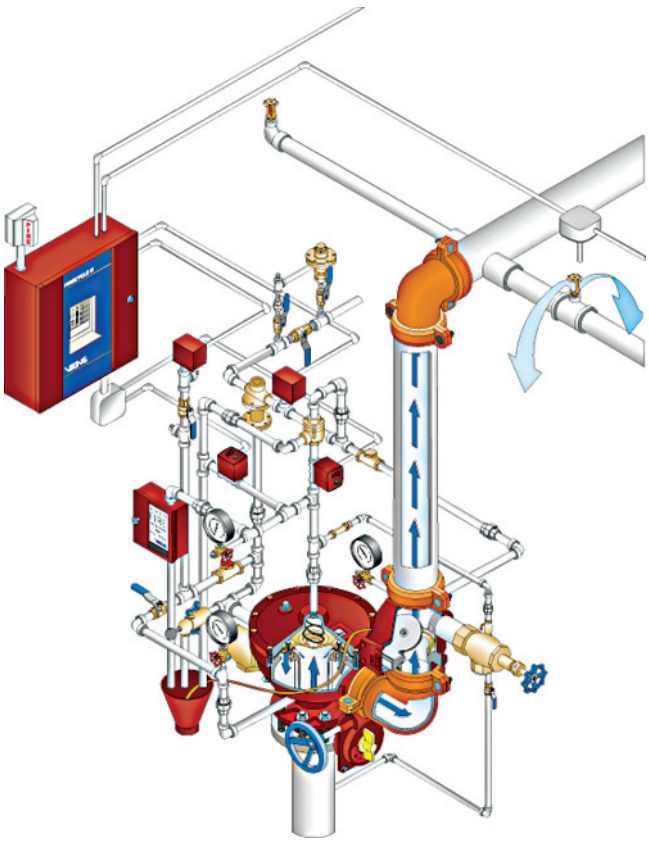

EXHIBIT 8.9 *Viking® Fire-Cycle III Multi-Cycle System Trim Package. (Courtesy of Viking Group, Inc.)*

EDUFIRE.IR

Multi-cycle sprinkler systems incorporate a closed-loop detection circuit. The heat detectors are closed switches that open when the detector reaches its set point, releasing the control valve and allowing water to flow into the system. The detectors reset or close when the temperature drops below the set point, subsequently closing the control valve and stopping water flow. However, in order to avoid short cycling the water flow, a timer must expire before the release panel shuts down the water flow. Exhibit 8.9 shows the trim package for a multi-cycle system.

Multi-cycle sprinkler systems are available as wet pipe, deluge, single interlock preaction, and double interlock system types. Wet and preaction multi-cycle systems are designed as "fail-safe" sprinkler systems, meaning that if the control panel were to lose both primary and backup power, the systems would still operate and flow water. Installation requirements for these systems are specific to the manufacturers' instructions.

8.5.1 All multi-cycle systems shall be specifically tested and listed as systems.

8.5.2 All multi-cycle systems shall be installed in compliance with the manufacturer's installation instructions.

8.6* Antifreeze Systems.

Antifreeze systems are often used as subsystems of a wet pipe system. Antifreeze systems are similar to wet systems, but they are not classified as wet systems. These systems are intended to protect small areas that could be exposed to freezing temperatures, such as outside loading docks. Antifreeze systems are also used for larger areas such as freezers, as well as for residential areas that are not protected against freezing temperatures.

Antifreeze systems were once economically more appealing than dry pipe systems for protecting small areas. The reduction in size and cost of certain dry pipe valves, combined with the added expense of backflow preventers and expansion chambers, has made antifreeze systems somewhat less appealing. However, since the hydraulic calculations for an antifreeze system can take the design area reductions of a wet system, there are situations in which the antifreeze system is more economical. Even where a backflow preventer is not required, a larger area protected with a dry pipe system could still provide a more economical option due to the cost of antifreeze for larger systems.

In August 2009, a fire in Truckee, California, brought to light potential problems with the combustibility of antifreeze solutions. In this case, an antifreeze solution was atomized through a discharging sprinkler and exploded, resulting in a fatality. Since that time, there has been research performed on antifreeze solutions used in sprinkler systems. This research resulted in the issuance of a Tentative Interim Agreement (TIA) by the NFPA Standards Council in August 2012 that prohibited the use of traditional antifreeze solutions in favor of listed solutions that will not ignite. While the original problem was brought to light in a residential occupancy with residential sprinklers, the testing found similar problems in nonresidential commercial applications with standard spray sprinklers.

A.8.6 In cold climates and areas where the potential for freezing of pipes is a concern, options other than antifreeze are available. Such options include installing the pipe in warm spaces, tenting insulation over the piping [as illustrated in Figure A.8.3.1(a) through Figure A.8.3.1(e) of NFPA 13D], listed heat tracing, and the use of dry pipe systems and preaction systems.

SEE ALSO

www.nfpa.org/antifreeze for more information.

The previous annex recommendation that systems be limited to 40 gal (151 L) was deleted in the 2002 edition of NFPA 13. It is important to note that, while the technical committee on sprinkler system installation has not set a limit on the size of antifreeze systems, in all cases, they must be properly designed, installed, and maintained.

EDUFIRE.IR

When designing an antifreeze system, the designer should account for the impact the antifreeze solution will have on the design calculations and the impact on expansion chamber size due to the volume of solution. For the 2007 edition of NFPA 13, the calculation requirements for antifreeze systems exceeding 40 gal (151 L) in size were modified in 27.2.2.1.3 to require a second set of calculations using the Darcy–Weisbach formula, as well as an adjusted K-factor for the sprinkler. Additionally, the size of the antifreeze system will affect the regular inspection, testing, and maintenance of the system. NFPA 25 requires that the antifreeze solution be tested annually. In the event that the antifreeze solution needs to be modified, the system must be drained and refilled.

8.6.1* General.

A.8.6.1 The definition of an antifreeze system states that water will discharge after the antifreeze leaves the pipes. Systems that are all antifreeze, including tanks of antifreeze solution that will not discharge plain water, are not true antifreeze systems. Such systems should not be used without consideration to issues such as the combustibility of the antifreeze solution and the friction loss in the piping during cold conditions. Any listing associated with an antifreeze sprinkler system should address the inability for the specific antifreeze solution tested to ignite when discharged from specific sprinklers.

Following the Fire Protection Research Foundation (FPRF) testing of antifreeze with standard spray sprinklers and the subsequent publication of "Antifreeze Solutions Supplied Through Spray Sprinklers: Interim Report," a TIA was issued on August 9, 2012, with an effective date of August 29, 2012, for NFPA 13 that now requires the use of listed antifreeze solutions in lieu of the traditional glycerin and propylene glycol solutions. The listing must include a confirmation that the solution will not contribute to a fire. The test data from the FPRF report show spikes of heat release rate up to 20 MW when the combustible solutions were discharged onto the fire. The new listed solutions must be formulated so that these increases in heat release rate are no longer experienced.

ASK THE AHJ

Authorities having jurisdiction who inspect seasonal properties might review plans that contemplate the entire system, including the water supply, being filled with antifreeze solution so that the heat can be turned off in the winter months when the property is not used. Is this permitted by NFPA 13?

No. A system that discharges only antifreeze solution and that does not follow with water is not allowed by NFPA 13, through the definition of *antifreeze sprinkler system* found in 3.3.206.1.

8.6.1.1 The use of antifreeze solutions shall be in conformity with state and local health regulations.

Regulations established by water purveyors regarding the use of antifreeze solutions in sprinkler systems has affected the antifreeze system option even though NFPA 13 permits only the use of nontoxic antifreeze solutions when the system is connected to a public water supply. Many local regulations require antifreeze systems to be equipped with a reduced-pressure zone backflow prevention device (see Exhibit 8.10) to guard against potential contamination of the public water supply. These local regulations have affected the economic advantages offered by antifreeze systems to some degree. The addition of a reduced-pressure zone device for an antifreeze subsystem could necessitate the use of an expansion chamber as well, which contributes to the cost.

8.6.1.2 Antifreeze shall not be used in ESFR systems unless the ESFR sprinkler is listed for use with the antifreeze solution.

EDUFIRE.IR

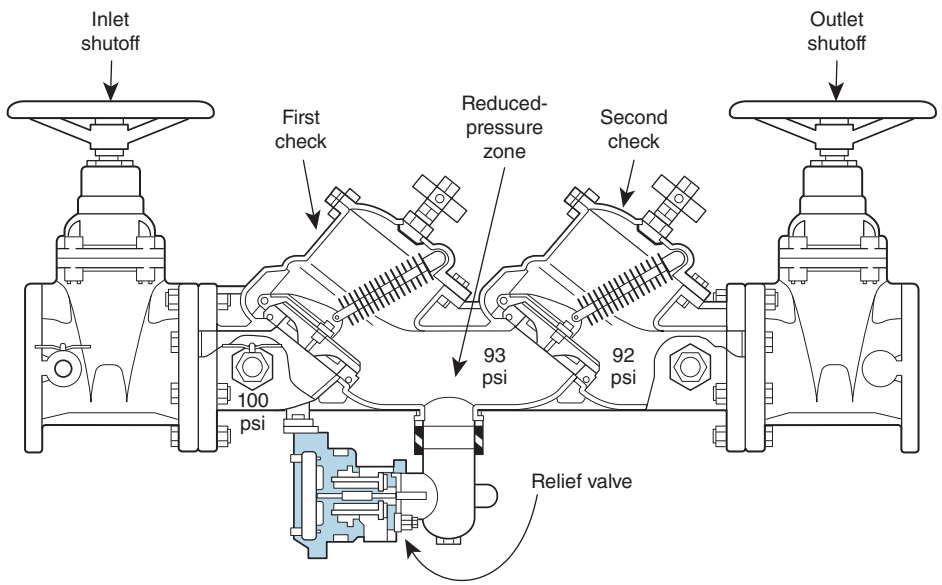

EXHIBIT 8.10 Backflow Prevention Device Installed on an Antifreeze System.

Where antifreeze solutions are used with ESFR sprinklers, NFPA 13 requires that the ESFR sprinkler be listed for use with a specific antifreeze solution. Some ESFR sprinklers have been tested with traditional antifreeze solutions (propylene glycol). Those tests contemplated a specific sprinkler with a specific concentration of antifreeze solution and did not exhibit the negative performance (large-scale ignition) noted in the recent FPRF testing. The combinations of antifreeze and ESFR sprinklers are still permitted where the allowable type and concentration of antifreeze is identified in the sprinkler listing. Specific exceptions for ESFR sprinklers for both new and existing systems are included, since the other test data associated with the listings support their continued use at higher percent volume antifreeze solutions.

8.6.1.3 Where pendent sprinklers are utilized, the water shall be drained from the entire system after hydrostatic testing with water.

8.6.1.3.1 The requirements of 8.6.1.3 shall not apply where the system is hydrostatically tested with properly mixed antifreeze solution.

Where antifreeze systems utilize pendent sprinklers, 8.6.1.3 requires that all the water be drained from the system, including the water trapped by the pendent sprinklers or in the sprinkler drops. This requirement ensures that ice plugs will not develop above the pendent sprinklers, since properly mixed antifreeze solution may not mix with any remaining water located above the pendent sprinkler or in drops. As an option, 8.6.1.3.1 permits the installer to hydrostatically test the system with a properly mixed antifreeze solution, which ensures that the solution is present throughout the system, including above pendent sprinklers and in drops. However, if there is a failure in the system during testing, antifreeze solution is lost, which could be very expensive.

8.6.1.4 Where antifreeze systems are remote from the system riser, a placard shall be mounted on the system riser that indicates the number and location of all remote antifreeze systems supplied by that riser.

8.6.1.5 A placard shall be placed on the antifreeze system main valve that indicates the manufacture type and brand of the antifreeze solution, the concentration by volume of the antifreeze solution used, and the volume of the antifreeze solution used in the system.

EDUFIRE.IR

A riser-mounted placard is required by 8.6.1.4 where a remote antifreeze system is provided to ensure that the number and location of all antifreeze systems supplied by the riser are identified. Additionally, 8.6.1.5 requires a sign to be placed on the main valve serving the antifreeze system to document the manufacture type and brand of the solution and the system volume to provide design details for inspection, testing, and maintenance of the antifreeze system.

8.6.2* Antifreeze Solutions.

A.8.6.2 Listed nonmetallic sprinkler pipe and fittings should be protected from freezing with compatible listed solutions only. In addition, due to antifreeze solution limitations, other methods of freeze protection such as electric heat tracing or insulated coverings, which are approved for use on nonmetallic piping, can be used to protect nonmetallic pipes from freezing.

The following is a list of research reports that have been issued by the Fire Protection Research Foundation (FPRF) related to the use of antifreeze in sprinkler systems:

(1) *Antifreeze Systems in Home Fire Sprinkler Systems — Literature Review and Research Plan*, Fire Protection Research Foundation, June 2010
(2) *Antifreeze Systems in Home Fire Sprinkler Systems — Phase II Final Report*, Fire Protection Research Foundation, December 2010
(3) *Antifreeze Solutions Supplied through Spray Sprinklers — Interim Report*, Fire Protection Research Foundation, February 2012

Table A.8.6.2 provides a summarized overview of the testing.

Testing conducted during the FPRF study on standard spray sprinklers and antifreeze concluded that with a 50 percent glycerin solution, which had previously been deemed a "safe" solution, certain combinations of variables (fire size, pressure, K-factor, ceiling height, etc.) will cause large-scale ignition of the antifreeze solution. The results of these tests were the catalyst for the latest set of antifreeze TIAs that resulted in the need for all antifreeze solutions used in new NFPA 13 systems to be listed. The technical committees working on the TIAs came to the conclusion that, due to the unpredictability of some of these variables in NFPA 13 systems, the use of 50 percent glycerin solution was no longer acceptable. The only solutions that are now allowed in new NFPA 13 antifreeze systems are those that have been listed. As noted in A.8.6.1, the listing associated with the antifreeze solution must indicate that the solution will not ignite. At the time this commentary was written, there were no listed antifreeze solutions available except for an ESFR system listing.

8.6.2.1* Except as permitted in 8.6.2.2, antifreeze solutions shall be listed for use in sprinkler systems.

A.8.6.2.1 Where existing antifreeze systems have been analyzed and approved to remain in service, antifreeze solutions should be limited to premixed antifreeze solutions of glycerine (chemically pure or United States Pharmacopoeia 96.5 percent) at a maximum concentration of 48 percent by volume, or propylene glycol at a maximum concentration of 38 percent by volume. The use of antifreeze solutions in all new sprinkler systems should be restricted to listed antifreeze solutions only. Where existing antifreeze systems are in service, the solution concentration should be limited to those noted in A.8.6.2, and the system requires an analysis and approval of the authority having jurisdiction to remain in service.

8.6.2.2 Premixed antifreeze solutions of propylene glycol shall be permitted to be used with ESFR sprinklers where the ESFR sprinklers are listed for such use in a specific application.

8.6.3 Arrangement of Supply Piping and Valves.

8.6.3.1 Where the connection between the antifreeze system and the wet pipe system does not incorporate a backflow prevention device, and the conditions of 8.6.3.5 are not met, piping and valves shall be installed as illustrated in Figure 8.6.3.1.

EDUFIRE.IR

TABLE A.8.6.2 *FPRF Antifreeze Testing Summary*

Topic	*Information*
Scope of sprinklers tested	The following sprinklers were used during the residential sprinkler research program described in the report dated December 2010: (1) Residential pendent style having nominal K-factors of 3.1, 4.9, and 7.4 gpm/psi$^{1/2}$ (45, 71, and 106 lpm/bar$^{1/2}$) (2) Residential concealed pendent style having a nominal K-factor of 4.9 gpm/psi$^{1/2}$ (71 lpm/bar$^{1/2}$) (3) Residential sidewall style having nominal K-factors of 4.2 and 5.5 gpm/psi$^{1/2}$ (60 and 79 lpm/bar$^{1/2}$) The following sprinklers were used during the spray sprinkler research program described in the report dated February 2012: (1) Residential pendent style having a nominal K-factor of 3.1 gpm/psi$^{1/2}$ (45 lpm/bar$^{1/2}$) (2) Standard spray pendent style having nominal K-factors of 2.8, 4.2, 5.6, and 8.0 gpm/psi$^{1/2}$ (40, 60, 80, and 115 lpm/bar$^{1/2}$) (3) Standard spray concealed pendent style having a nominal K-factor of 5.6 gpm/psi$^{1/2}$ (80 lpm/bar$^{1/2}$) (4) Standard spray upright style having a nominal K-factor of 5.6 gpm/psi$^{1/2}$ (80 lpm/bar$^{1/2}$) (5) Standard spray extended coverage pendent style having a nominal K-factor of 5.6 gpm/psi$^{1/2}$ (80 lpm/bar$^{1/2}$)
Antifreeze solution concentration	<50% glycerine and <40% propylene glycol antifreeze solutions: Solutions were not tested. 50% glycerine and 40% propylene glycol antifreeze solutions: Large-scale ignition of the sprinkler spray did not occur in tests with sprinkler discharge onto a fire having a nominal heat release rate (HRR) of 1.4 megawatts (MW). Large-scale ignition of sprinkler spray occurred in multiple tests with sprinkler discharge onto a fire having a nominal HRR of 3.0 MW. 55% glycerine and 45% propylene glycol antifreeze solutions: Large-scale ignition of the sprinkler spray occurred in tests with sprinkler discharge onto a fire having a nominal HRR of 1.4 MW. >55% glycerine and >45% propylene glycol antifreeze solutions: Large-scale ignition of the sprinkler spray occurred in tests with sprinkler discharge onto a fire having an HRR of less than 500 kW. 70% glycerine and 60% propylene glycol antifreeze solutions: Maximum antifreeze solution concentrations tested.
Sprinkler inlet pressure	Large-scale ignition of the sprinkler discharge spray was not observed when the sprinkler inlet pressure was 50 psi or less for tests using 50% glycerine or 40% propylene glycol.
Ceiling height	When discharging 50% glycerine and 40% propylene glycol antifreeze solutions onto fires having an HRR of 1.4 MW, no large-scale ignition of the sprinkler spray was observed with ceiling heights up to 20 ft (6.1 m). When discharging 50% glycerine and 40% propylene glycol antifreeze solutions onto fires having a HRR of 3.0 MW, large-scale ignition of the sprinkler spray was observed at a ceiling height of 20 ft (6.1 m).
Fire control	The test results described in the test reports dated December 2010 and February 2012 indicated that discharging glycerine and propylene glycol antifreeze solutions onto a fire can temporarily increase the fire size until water is discharged. As a part of the residential sprinkler research described in the report dated December 2010, tests were conducted to evaluate the effectiveness of residential sprinklers to control fires involving furniture and simulated furniture. The results of these tests indicated that 50% glycerine and 40% propylene glycol antifreeze solutions demonstrated the ability to control the furniture type fires in a manner similar to water. For standard spray type sprinklers, no tests were conducted to investigate the ability of these sprinklers to control the types and sizes of fires that these sprinklers are intended to protect.

EDUFIRE.IR

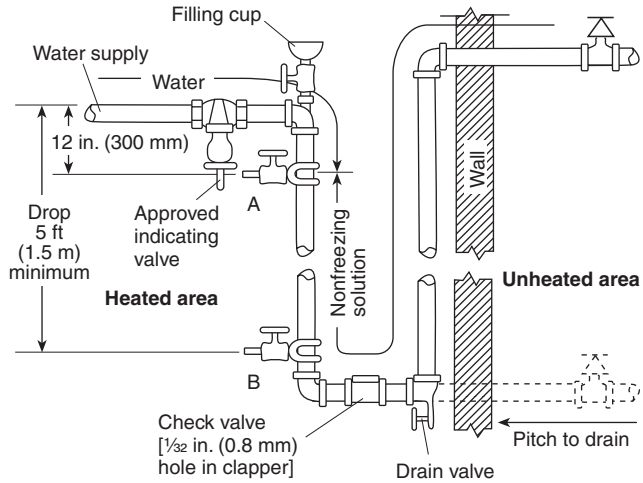

Notes:
1. Check valves are permitted to be omitted where sprinklers are below the level of valve A.
2. The 1/32 in. (0.8 mm) hole in the check valve clapper is needed to allow for expansion of the solution during a temperature rise, thus preventing damage to sprinklers.

FIGURE 8.6.3.1 *Arrangement of Supply Piping and Valves.*

ASK THE AHJ

Does the authority having jurisdiction determine the minimum expected temperatures used in determining the necessary level of freeze protection?

No. The fire sprinkler system designer is responsible for determining the lowest expected temperatures the system will experience.

NFPA 13 does not specify a standardized approach to thisdetermining the lowest expected temperature. When determining the lowest expected temperatre, the designer should take into account local meteorology and heat loss characteristics for the portion of the building where the antifreeze system will be installed.

Arrangement of supply piping and valves is addressed in 8.6.3.1. Since all permitted antifreeze solutions are heavier than water, an interface at which the water in the wet system will stay above the heavier antifreeze solution is created. If possible, the entire antifreeze system should be below the level of this interface, thus preventing the diffusion of water into low-temperature areas. When the antifreeze system is above the interface, alternative piping arrangements and additional system components, as illustrated in Figure 8.6.3.1 and Figure 8.6.3.3, are necessary.

Figure 8.6.3.1 shows an arrangement of supply piping and valves for an antifreeze system without a backflow device and with the sprinklers above the water/antifreeze interface. In this arrangement, a check valve and a 5 ft (1.5 m) drop or U-loop is needed so that the antifreeze does not flow back into the wet pipe system. Additionally, because antifreeze solutions can expand with a rise in temperature and result in high pressures that can damage system components, a 1/32 in. (0.8 mm) hole drilled into the clapper of the check valve is needed. There are check valves available that are predrilled and should be used versus drilling the clapper in the field. If the antifreeze system is entirely below the interface with the wet pipe system (shown at valve A in Figure 8.6.3.1), or a backflow device is used as indicated in 8.6.3.2, the check valve and the 5 ft (1.5 m) drop are not needed.

EDUFIRE.IR

Actual field conditions and practices could require some modification to the arrangement shown in Figure 8.6.3.1. For example, because the piping on the antifreeze system is at a higher elevation than the water supply, the use of a gravity-type filling cup at the illustrated supply location is not practical. If antifreeze is gravity-fed into the system, the filling cup should be relocated to the high point of the antifreeze system piping. As an alternative, antifreeze can be pumped into the system through the filling cup as shown in Figure 8.6.3.1.

8.6.3.2* Where the connection between the antifreeze system and the supply piping incorporates a backflow prevention device, and the conditions of 8.6.3.5 are not met, piping and valves shall be installed as illustrated in Figure 8.6.3.3 or Figure 8.6.3.4.

A.8.6.3.2 One formula for sizing the chamber is as follows. Other methods also exist.

$$\Delta L = S_V \left(\frac{D_L}{D_H} - 1 \right) \qquad \textbf{[A.8.6.3.2a]}$$

where:

ΔL = change in antifreeze solution volume (gal) due to thermal expansion
S_V = volume (gal) of antifreeze system, not including the expansion chamber
D_L = density (gm/mL) of antifreeze solution at lowest expected temperature
D_H = density (gm/mL) of antifreeze solution at highest expected temperature

This method is based on the following information:

$$\frac{P_0 \cdot V_0}{T_0} = \frac{P_1 \cdot V_1}{T_1} = \frac{P_2 \cdot V_2}{T_2} \qquad \textbf{[A.8.6.3.2b]}$$

where:

V_{EC} = minimum required volume (gal) of expansion chamber
V_0 = air volume (gal) in expansion chamber at precharge (before installation)
V_1 = air volume (gal) in expansion chamber at normal static pressure
V_2 = air volume (gal) in expansion chamber at post-expansion pressure (antifreeze at high temperature)
P_0 = absolute precharge pressure (psia) on expansion chamber before installation
P_1 = absolute static pressure (psi) on water (supply) side of backflow preventer
P_2 = absolute maximum allowable working pressure (psi) for antifreeze system
T_0 = temperature (°R) of air in expansion chamber at precharge
T_1 = temperature (°R) of air in expansion chamber when antifreeze system piping is at lowest expected temperature
T_2 = temperature (°R) of air in expansion chamber when antifreeze system piping is at highest expected temperature

This equation is one formulation of the ideal gas law from basic chemistry. The amount of air in the expansion chamber will not change over time. The pressure, temperature, and volume of the air at different times will be related in accordance with this formula:

$$V_2 = V_1 - \Delta L \qquad \textbf{[A.8.6.3.2c]}$$

The antifreeze in the system is essentially incompressible, so the air volume in the expansion chamber will decrease by an amount equal to the expansion of the antifreeze.

It is assumed that there is no trapped air in the system piping, so the only air in the system is in the expansion chamber. This is a conservative assumption, since more air is better. In reality, there will be at least some trapped air. However, only the air in the expansion chamber can be relied upon to be available when needed.

$$V_{EC} = V_0 \qquad \textbf{[A.8.6.3.2d]}$$

EDUFIRE.IR

At precharge, the chamber will be completely full of air.

$$V_{EC} = \frac{P_1 \cdot T_0 \cdot P_2 \cdot \Delta L \cdot T_1}{P_0 \cdot T_1 (P_2 \cdot T_1 - P_1 \cdot T_2)} \qquad \textbf{[A.8.6.3.2e]}$$

In cases where the normal static pressure on the sprinkler system is close to the maximum working pressure, antifreeze systems are not advisable if the connection to the wet pipe system will incorporate a backflow device. In these cases, expansion of the antifreeze solution during warm weather will cause the antifreeze system to exceed the maximum working pressure, regardless of the size of the expansion chamber. The normal static pressure is too close to the maximum working pressure if the preceding formula for V_{EC} yields a negative result. If this occurs, use a dry pipe system instead or install a pressure-reducing valve before the backflow preventer.

A backflow preventer, as specified in 8.6.3.2, marks the interface between the wet pipe system and the antifreeze system. Because the backflow preventer prevents the flow of antifreeze back into the wet pipe system, regardless of the elevation of the antifreeze system, the piping arrangement and valves shown in Figure 8.6.3.1 are not necessary.

8.6.3.2.1 A means shall be provided to perform a full forward flow test in accordance with 16.14.5.

All backflow preventers need to be provided with a means to conduct a full forward flow test in accordance with 16.14.5 and NFPA 25 during subsequent testing. This requirement is often overlooked in instances where the backflow preventer is installed at the connection between the wet system and the antifreeze system.

FAQ [8.6.3.3]

Are there additional design considerations when a reduced-pressure backflow preventer is utilized?

A reduced-pressure backflow preventer contains a relief valve that discharges water to atmosphere under some circumstances. This discharge can be a significant amount of water, and appropriate drainage needs to be provided. The designer should determine from the backflow preventer manufacturer the anticipated flow from the relief valve if it discharges to atmosphere.

8.6.3.3* Where the connection between the antifreeze system and the wet pipe system incorporates a backflow prevention device, and the conditions of 8.6.3.5 are not met, a listed expansion chamber shall be provided to compensate for thermal expansion of the antifreeze solution as illustrated in Figure 8.6.3.3.

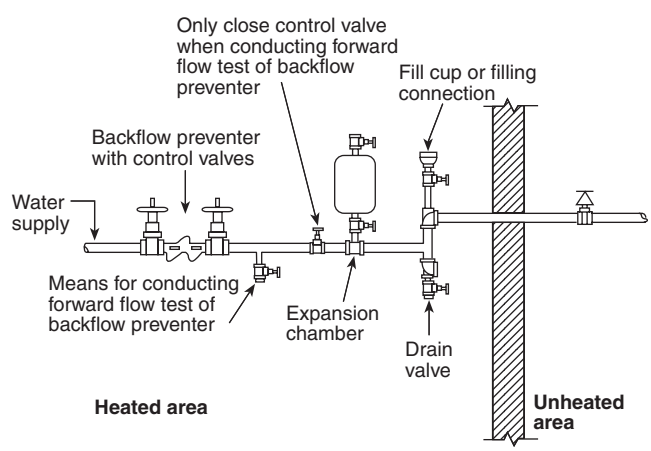

FIGURE 8.6.3.3 *Arrangement of Supply Piping with Backflow Device.*

A listed expansion chamber, such as the one shown in Exhibit 8.11, is precharged with a nitrogen or dry air pneumatic cushion to account for pressure increases that result from antifreeze temperature change. As the temperature rises, the expansion chamber provides additional space to accommodate the expanded volume of solution. As system pressure increases, the cushion within the expansion chamber is compressed, creating the necessary space to accommodate the increased volume of antifreeze solution. The expansion chamber must be properly sized to avoid system pressures in excess of the working pressures of the system components.

EDUFIRE.IR

The expansion chamber is required rather than some other type of pressure-relieving device, such as a relief valve, because antifreeze solution is discharged from the system when the relief valve operates. Most manufacturers will size the expansion chamber for sprinkler contractors who provide basic information.

A.8.6.3.3 The expansion chamber should be appropriately sized and precharged with air pressure.

8.6.3.3.1 When determining the size of the expansion chamber, the precharge air temperature and precharge air pressure shall be included.

As indicated by the equations in A.8.6.3.2, calculating the appropriate size of the expansion chamber requires some understanding of the overall process involved. The antifreeze system can be exposed to a seasonal temperature fluctuation — for example, winter to summer — that causes the antifreeze solution to expand and contract. The amount of expansion depends on the total temperature change and the density of the specific solution used.

As the solution expands, some volume flows into the expansion chamber, compressing the air within the chamber. As the air compresses, a corresponding increase of the pressure on the system occurs. The air volume must be large enough to keep the system pressure below the pressure limitations of the system components. Factors, other than the amount of thermal expansion, that influence the required air volume (chamber size) include seasonal temperature changes of the air within the chamber, which often differ from the temperature change of the antifreeze solution; precharged air pressure level; and static pressure of the water supply. Fluctuations of air temperature within the expansion chamber can differ from the fluctuations of the temperature of the antifreeze system, since the chamber is often located within a temperature-controlled portion of the building.

Situations, such as a high static pressure condition, occur in which the system pressure cannot be kept below 175 psi (12 bar) with an expansion chamber.

EXHIBIT 8.11 *Listed Expansion Chamber. (Courtesy of Amtrol)*

8.6.3.3.2 The size of the expansion chamber shall be such that the maximum system pressure does not exceed the rated pressure for any components of the antifreeze system.

8.6.3.4 A listed ½ in. (15 mm) relief valve shall be permitted in lieu of the expansion chamber required in 8.6.3.3, and as illustrated in Figure 8.6.3.4, provided the antifreeze system volume does not exceed 40 gal (150 L).

8.6.3.5 The requirements of 8.6.3.1, 8.6.3.2, and 8.6.3.3 shall not apply where the following three conditions are met:

(1) The antifreeze system is provided with an automatic pressure pump or other device or apparatus to automatically maintain a higher pressure on the system side than on the supply side of the water supply check valve separating the antifreeze system from the water supply.
(2) Provision is made to automatically release solution to prevent overpressurization due to thermal expansion of the solution.
(3) Provision is made to automatically supply premixed solution as needed to restore system pressure due to thermal contraction.

8.6.3.6* A drain/test connection shall be installed at the most remote portion of the system.

A.8.6.3.6 Systems are required by NFPA 25 to have the concentration levels checked at the supply inlet to the antifreeze system and at a remote point of the system.

EDUFIRE.IR

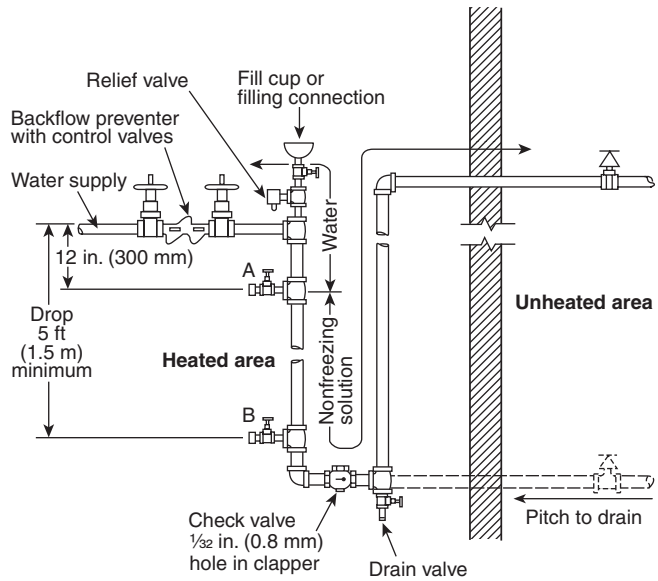

Notes:
1. Check valve can be omitted where sprinklers are below the level of valve A.
2. The 1/32 in. (0.8 mm) hole in the check valve clapper is needed to allow for expansion of the solution during a temperature rise, thus preventing damage to sprinklers.

FIGURE 8.6.3.4 *Arrangement of Supply Piping with Relief Valve and Backflow Device.*

8.6.3.7 For systems with a capacity larger than 150 gal (570 L), an additional test connection shall be provided for every 100 gal (380 L).

Checking the concentration level of the antifreeze solution only at the inlet to the system does not necessarily confirm that the solution in the remote portions of the system is at an acceptable level. To facilitate taking a sample, an additional test connection is required at the remote portion of the system. Additional test connections are also required for larger systems. Checking the additional locations is required by NFPA 25, as discussed in A.8.6.3.6.

8.7 Outside Sprinklers for Protection Against Exposure Fires (Exposure Protection Sprinkler Systems).

The exposure protection systems addressed in Section 8.7 are usually installed on the exterior surface of a building to protect against exposure fires from an adjacent building, hazard, or operation. An outside system typically has two performance objectives. One objective is to significantly limit the radiation or convective heat generated by an exposure fire from entering the building through windows, doors, and other openings in the exposed walls. This protection minimizes the likelihood of the ignition of building contents and other combustibles. The other objective is to minimize the likelihood of ignition of, or heat damage to, exterior combustible wall surfaces, including sheathing, eaves, and cornices.

Prompt sprinkler system discharge should occur by automatic actuation of the outside sprinklers. Delayed application of water to glass surfaces that have become sufficiently heated can result in breakage from thermal shock. Delayed application of water can also result in ignition of exterior combustible surfaces or damage to heat-sensitive materials.

Outside sprinkler systems might be required to compensate for lack of physical separation between adjacent structures. NFPA 80A, *Recommended Practice for Protection of Buildings from Exterior Fire Exposures,*

EDUFIRE.IR

recognizes a reduction of separation distances between buildings where proper exposure protection from sprinklers is provided.

In areas where model building codes and land development codes are enforced, this situation is rarely encountered since planning department ordinances will require adequate separation. Outside sprinkler systems usually are employed only when there are extenuating circumstances that cannot be worked around. Section 8.7 does not include requirements for protection from wildland fires. However, it might provide a reasonable starting point for someone who wants to protect a building from such a fire.

8.7.1 Applications.

8.7.1.1 Exposure protection sprinkler systems shall be permitted on buildings and structures regardless of whether the building's interior is protected by a sprinkler system.

8.7.1.2 Where exposure protection systems are required, they shall be installed to provide protection of windows and other openings within masonry walls, complete protection of walls, protection of roofs, or any combination thereof.

8.7.2 Water Supply and Control.

8.7.2.1 Unless the requirements of 8.7.2.2 are met, sprinklers installed for protection against exposure fires shall be supplied from a standard water supply as outlined in Chapter 5.

Water supply is covered in 8.7.2.1. Water should be continuously delivered at the required application rate to the outside sprinkler system for the duration of exposure fire expected from an adjacent building, structure, or other exposure source, such as a flammable liquid storage tank or scrap tire storage. The required duration might exceed 60 minutes if hose streams cannot be applied in a sufficient amount of time or if the exposing fire cannot be contained during its developmental stages. Subsection 8.7.9 provides further guidance on the design parameters of an outside sprinkler system for exposure protection.

8.7.2.2 Where approved, other supplies, such as manual valves or pumps or fire department connections, shall be permitted to supply water to sprinklers for exposure protection.

Paragraph 8.7.2.2 permits a water supply other than the automatic water supply required in Chapter 5. The authority having jurisdiction must determine if this method of water supply, which includes fire department apparatus pumping into the fire department connection, is acceptable for the circumstances. This situation is the only one noted in NFPA 13 that does not require an automatic supply.

8.7.2.3 Where fire department connections are used for water supply, they shall be so located that they will not be affected by the exposing fire.

8.7.3 Control.

8.7.3.1 Each system of outside sprinklers shall have an independent control valve.

The division of sprinkler piping and sprinklers into separate systems, each of which needs to have an independent control valve as required in 8.7.3.1, should take into account the extent of a likely exposure fire from adjacent buildings or operations. Further division of sprinkler piping can be necessary if the surface to be protected is quite large.

The water supply can limit the area that can be protected by a single system. The system can be sized based on the assumption that any exposing fire will be confined to a certain size if the exposing building is compartmented by construction features such as fire walls, partitions, or enclosed stair shafts. In other words, it might not be necessary to assume that the entire exposed building wall will be engulfed in fire.

Flames from an adjacent building or structure will likely rise upward in a rectangular plume area. All outside sprinkler systems should be arranged to discharge water simultaneously over the corresponding rectangular plume area, assuming that the exposure will occur from ground level upward.

8.7.3.2 Manually controlled open sprinklers shall be used only where constant supervision is present.

EDUFIRE.IR

Where automatic actuation of outside sprinkler systems cannot be provided, prompt system operation should be ensured through manual means by the opening of strategically located and identified valves. Personnel assigned the responsibility for, and instructed in, the operation and importance of these systems need to constantly monitor the exposing operations.

8.7.3.3 Sprinklers shall be of the open or automatic type.

8.7.3.4 Automatic sprinklers in areas subject to freezing shall be on dry pipe systems conforming to Section 8.2 or antifreeze systems conforming to Section 8.6, or be dry sprinklers of an adequate length connected to wet pipe systems located in heated areas.

8.7.3.5 Automatic systems of open sprinklers shall be controlled by the operation of fire detection devices designed for the specific application.

As addressed in 8.7.3.5, fire detection devices with weatherproof fixtures should be located on the exterior of the exposed building in such a manner as to rapidly detect heat radiation or convection from an exposing fire. Spacing and location of detectors should be closer than that specified by the manufacturer if the line of sight of the exposing building or structure is obstructed.

8.7.4 System Components.

8.7.4.1 Drain Valves. Each system of outside sprinklers shall have a separate drain valve installed on the system side of each control valve, except where an open sprinkler, top-fed system is arranged to facilitate drainage.

8.7.4.2 Check Valves.

8.7.4.2.1* Where sprinklers are installed on two adjacent sides of a building, protecting against two separate and distinct exposures, with separate control valves for each side, the end lines shall be connected with check valves located so that one sprinkler around the corner will operate.

Check valves are covered in 8.7.4.2.1 through 8.7.4.2.3. The "trapped" section of pipe and sprinklers located between two check valves must be drained automatically to prevent water from freezing in the piping after system operation. Drainage can be accomplished by providing a down-turned tee outlet and a K-2.8 sprinkler located in the piping at a low point. If the K-2.8 sprinkler has not fused during sprinkler system operation, it must be removed to drain the piping and then replaced.

A.8.7.4.2.1 See Figure A.8.7.4.2.1.

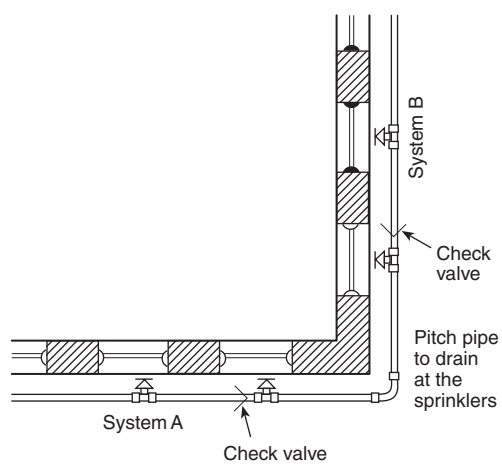

FIGURE A.8.7.4.2.1 *Typical Arrangement of Check Valves.*

EDUFIRE.IR

8.7.4.2.2 The intermediate pipe between the two check valves shall be arranged to drain.

8.7.4.2.3* As an alternate solution, an additional sprinkler shall be installed on each system located around the corner from the system involved.

System arrangement is addressed in 8.7.4.3. Heat transfer from an exposing fire is typically accomplished by convection or radiation. Radiation is direct along a line of sight, while convection is via fire gases, which can be flaming and deflected by drafts or wind.

The convective gases are somewhat easier to cool, due to the effect of the water spray from the sprinklers. Radiated heat is more difficult to block, since some of it can pass through the water spray and reach the exposed building. To accommodate this type of heat, systems should be designed so that a certain amount of water flows down the exposed building walls.

Outside sprinkler systems can be required to extend beyond the wall area directly opposite the exposing building or structure, to surfaces other than those parallel to the exposing building wall or structure surface, or both.

A.8.7.4.2.3 See Figure A.8.7.4.2.3.

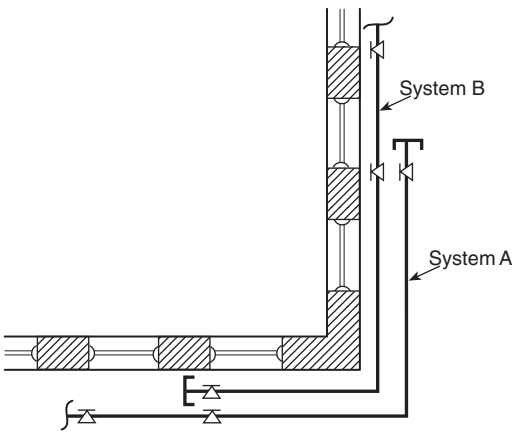

FIGURE A.8.7.4.2.3 *Alternate Arrangement of Check Valves.*

8.7.4.3 System Arrangement. Where one exposure affects two sides of the protected structure, the system shall not be subdivided between the two sides but rather shall be arranged to operate as a single system.

8.7.5 Pipe and Fittings. Pipe and fittings installed on the exterior of the building or structure shall be corrosion resistant.

Outside sprinkler systems are exposed to environmental conditions, so exterior surfaces of outside system components are subject to an accelerated rate of corrosion, which is the reason for the requirement in 8.7.5. The interior surfaces of the system also are subject to an accelerated rate of corrosion if the sprinklers are open, as in a manually or automatically controlled deluge system. Pipe scale, which forms in the interior of the system, could obstruct sprinkler orifices when the system activates. Therefore, galvanized pipe and fittings are normally used for this application. Corrosion of pipe is an important consideration, since sprinklers with nominal K-factors less than 4.2 can be used in these special systems.

8.7.6 Strainers. A listed strainer shall be provided in the riser or feed main that supplies sprinklers having nominal K-factors smaller than K-2.8 (40).

Scale, mud, or debris can become dislodged from piping by fast-moving water traveling through dry pipe or deluge sprinkler systems. Sprinklers with nominal K-factors less than 2.8 are more susceptible to

EDUFIRE.IR

clogging. Strainers should be listed, located adjacent to the control valve, and capable of being cleaned and flushed without the waterflow being interrupted while the outside sprinkler system is operating.

8.7.7 Gauge Connections. A pressure gauge conforming to Section 16.13 shall be installed immediately below the control valve of each system.

8.7.8 Sprinklers.

Types of outside sprinklers and the manner in which they should be installed are addressed in 8.7.8. Many sprinklers approved for use in outside sprinkler systems are automatic in operation, which means that they are equipped with heat-sensitive fusible elements. The use of automatic sprinklers allows for the installation of wet pipe systems in nonfreezing climates and the installation of dry pipe systems in areas where outside freezing conditions can occur.

Some sprinklers approved for use in outside sprinkler systems are not equipped with heat-sensitive fusible elements. Outside sprinkler systems that use open or nonautomatic sprinklers must be of the deluge type.

Outside sprinkler systems provide fire protection by removing or mitigating the effects of heat that are transmitted from an exposing fire. Water sprays from sprinklers are shown to reduce radiated heat passing through them by 50 to 70 percent, depending on waterflow rates. In addition, convected fire gases are cooled as they pass through the sprinkler spray. A portion of the convected and radiated heat passes through the water spray and reaches the protected surface. However, a certain amount of sprinkler discharge should be directed so that it runs down the side of the building and cools the exposed surface. Provisions must be made so that the water remains in contact with the wall or window surface while running down the exposed surface. Additionally, consideration should be given to the effects of wind, so that the surface can be properly wetted.

8.7.8.1 A single line of sprinklers is permitted to protect a maximum of two stories of wall area or two levels of vertically aligned windows where architectural features are sufficiently flush to allow rundown.

8.7.8.2 Where window sills or similar features result in recesses or projections exceeding 1 in. (25 mm) in depth, separate sprinklers shall be provided for each window on each level, regardless of whether protection is being provided for windows or complete walls.

8.7.8.3 For wall protection systems, sprinklers shall be located 6 in. to 12 in. (150 mm to 300 mm) from the wall surface and within 6 in. (150 mm) of the top of the wall, with maximum spacing of 8 ft (2.4 m) or as indicated in the sprinkler listing for exposure protection use.

8.7.8.4 For protection of window and similar openings, listed window sprinklers shall be positioned within 2 in. (50 mm) of the top of the window sash in accordance with Table 8.7.8.4.

TABLE 8.7.8.4 *Position of Window Sprinklers*

	Nominal K-Factor		*Nominal Distance from Window*	
Width of Window (ft)	*U.S.*	*Metric*	*in.*	*mm*
Up to 3	2.8	40	7	175
>3 to 4	2.8	40	8	200
>4 to 5	2.8	40	9	225
	5.6	80	12	300
>5 to 7	11.2	160	12	300
	Two 2.8	40	7	175
>7 to 9.5	14.0	200	12	300
	Two 2.8	40	9	225
>9.5 to 12	Two 5.6	80	12	300

For SI units, 1 ft = 0.3048 m.

EDUFIRE.IR

8.7.8.5 Where exposure protection sprinkler systems are installed, listed cornice sprinklers shall be used to protect combustible cornices exceeding 12 in. (300 mm) in depth.

8.7.8.5.1 Cornice sprinklers shall be installed in each bay formed by cornice features and shall be spaced up to a maximum distance of 10 ft (3.0 m) apart, with deflectors 8 in. (200 mm) below the underside of the roof sheathing.

8.7.8.6 Open spray sprinklers (upright, pendent, or sidewall) shall be permitted for application in roof protection when installed in accordance with ordinary hazard Group 1 protection areas and discharge criteria, with deflectors aligned parallel to the slope and positioned a minimum 18 in. (450 mm) above the roof surface.

8.7.8.6.1 Upright sprinklers positioned as ridge pole sprinklers shall be permitted with their deflectors horizontal and minimum 6 in. (150 mm) above the ridge, with their maximum spacing and protection areas determined in the plan view rather than along the slope.

8.7.9* Exposure Protection Sprinkler Systems.

A.8.7.9 In the design of an exposure protection system, the flow rate from window and cornice sprinklers is shown in Table 8.7.9.1. The flow rates are based on the guide numbers selected from Table 4.3.7.3 of NFPA 80A, which can be utilized as the basis for determining whether exposure protection is needed.

8.7.9.1 Exposure protection sprinkler systems shall be hydraulically calculated using Table 8.7.9.1 based on severity of exposure as indicated by a relative classification of guide number or other approved source.

TABLE 8.7.9.1 *Exposure Protection*

Section A — Wall and Window Sprinklers

Exposure Severity	*Guide Number*	*Level of Wall or Window Sprinklers*	*Minimum Nominal K-Factor*	*Discharge Coefficient (K-Factor)*	*Minimum Average Application Rate Over Protected Surface*	
					gpm/ft²	*mm/min*
Light	1.50 or less	Top 2 levels	2.8 (40)	2.8 (40)	0.20	8.1
		Next lower 2 levels	1.9 (27)	1.9 (27)	0.15	6.1
		Next lower 2 levels	1.4 (20)	1.4 (20)	0.10	4.1
Moderate	1.5–2.20	Top 2 levels	5.6 (80)	5.6 (80)	0.30	12.2
		Next lower 2 levels	4.2 (60)	4.2 (60)	0.25	10.2
		Next lower 2 levels	2.8 (40)	2.8 (40)	0.20	8.2
Severe	>2.20	Top 2 levels	11.2 (161)	11.2 (161)	0.40	16.3
		Next lower 2 levels	8.0 (115)	8.0 (115)	0.35	14.3
		Next lower 2 levels	5.6 (80)	5.6 (80)	0.30	12.2

Section B — Cornice Sprinklers

Guide Number	*Cornice Sprinkler Minimal Nominal K-Factor*	*Application Rate per Lineal Foot (gpm)*	*Application Rate per Lineal Meter (L/min)*
1.50 or less	2.8 (40)	0.75	9.3
>1.51–2.20	5.6 (80)	1.50	18.6
>2.20	11.2 (161)	3.00	37.3

EDUFIRE.IR

8.7.9.2 In no case shall compliance with Table 8.7.9.1 result in a sprinkler discharge pressure below 7 psi (0.5 bar).

8.7.9.3 Only half of the flow from upright, pendent, and other nondirectional sprinklers shall be used in determining the minimum average application rate over the protected surface.

8.7.9.4 The water supply shall be capable of simultaneously supplying the total demand of sprinklers along an exposure to a maximum length of 300 ft (91 m). Where systems of open sprinklers are used, the water supply shall be capable of simultaneously flowing all sprinklers that would flow as part of all systems that could be actuated within any 300 ft (91 m) length.

8.7.9.5 The water supply duration for an exposure protection sprinkler system shall be a minimum of 60 minutes.

8.7.9.6 A level of window sprinklers as described in Table 8.7.9.1 shall be defined as a floor level of the building being protected.

8.7.9.7 Window sprinklers shall be permitted to cover more than 25 ft^2 (2.3 m^2) of window area per level.

8.7.9.7.1 The starting pressure shall be calculated based on the application rate over 25 ft^2 (2.3 m^2) of window area as indicated in Table 8.7.9.1.

8.7.9.7.2 The maximum spacing between window sprinklers shall not exceed 8 ft (2.4 m) unless listed for a greater distance.

8.8* Refrigerated Spaces.

A.8.8 Careful installation and maintenance, and some special arrangements of piping and devices as outlined in this section, are needed to avoid the formation of ice and frost inside piping in cold storage rooms that will be maintained at or below 32°F (0°C). Conditions are particularly favorable to condensation where pipes enter cold rooms from rooms having temperatures above freezing.

Whenever the opportunity offers, fittings such as those specified in 8.8.2.1, as well as flushing connections, should be provided in existing systems.

Where possible, risers should be located in stair towers or other locations outside of refrigerated areas, which would reduce the probabilities of ice or frost formation within the riser (supply) pipe.

Cross mains should be connected to risers or feed mains with flanges. In general, flanged fittings should be installed at points that would allow easy dismantling of the system. Split ring or other easily removable types of hangers will facilitate the dismantling.

Because it is not practical to allow water to flow into sprinkler piping in spaces that might be constantly subject to freezing, or where temperatures must be maintained at or below 40°F (4.4°C), it is important that means be provided at the time of system installation to conduct trip tests on dry pipe valves that service such systems. NFPA 25 contains requirements in this matter.

Dry pipe systems installed in refrigerated spaces require special care and consideration since temperatures are below freezing and frequently in subzero ranges. If a system trips accidentally and allows the piping to fill with water, the nature of the occupancy can preclude heating the space to allow frozen water within the pipe to thaw and repairs made to the system. Such systems might need to have the pipe dismantled and moved to a warm area where it can be thawed, emptied, and then reinstalled. Such operations are costly and result in long periods during which systems are out of service. Where conditions are particularly severe, double interlock preaction or other types of special systems should be considered.

EDUFIRE.IR

In refrigerated spaces, the air supply for the preaction or dry pipe system needs to be sufficiently dry to prevent the accumulation of moisture and the subsequent development of ice plugs in the system piping. There have been instances in which sprinkler systems protecting freezers maintained at 5°F (−15°C) or less have become plugged by ice or where frost deposits have increased. The plugs can create total blockage of the feed main and severely impair the system. Provisions for decreasing the chances of ice plug or ice block formation in the air supply line or in the sprinkler piping consist of arranging pipe and associated appurtenances in a manner that minimizes the moisture content in the air supply. Means of reducing the likelihood of ice plug formation include taking the air supply from the coldest freezer area, installing air dryers, or using a moisture-free gas such as nitrogen. Air dryers are typically the desiccant type with small compressors often using a replaceable cartridge (see Exhibit 8.12) and larger compressors using a regenerative assembly (see Exhibit 8.13).

EXHIBIT 8.12 Replaceable Desiccant Dryer Cartridge. (Courtesy of General Air Products, Inc.)

8.8.1 Spaces Maintained at Temperatures Above 32°F (0°C). Where temperatures are maintained above 32°F (0°C) in refrigerated spaces, the requirements in this section shall not apply.

8.8.2* Spaces Maintained at Temperatures Below 32°F (0°C).

A.8.8.2 The requirements in 8.8.2 are intended to minimize the chances of ice plug formation inside sprinkler system piping protecting freezers.

8.8.2.1 General.

8.8.2.1.1* Where sprinkler pipe passes through a wall or floor into the refrigerated space, a section of pipe arranged for removal shall be provided immediately inside the space.

The removable section of pipe required in 8.8.2.1.1, as well as other fittings illustrated in Figure A.8.8.2.4 and Figure 8.8.2.7.1.1(a), facilitate examination of piping to determine if ice formation is occurring. If inspections are conducted on a routine basis, the potential formation of ice plugs and their detrimental effect on system performance can be reduced.

N **A.8.8.2.1.1** It is not the intent of this section to apply to a dry sprinkler. An additional pipe is not needed when a dry sprinkler penetrates a refrigerated space.

8.8.2.1.2 The removable length of pipe required in 8.8.2.1.1 shall be a minimum of 30 in. (750 mm).

8.8.2.2 Low Air Pressure Alarm.

8.8.2.2.1 Unless the requirements of 8.8.2.2.2 are met, a low air pressure alarm to a constantly attended location shall be installed.

Low air pressure alarms are intended to notify plant personnel that system air pressure is below acceptable limits. Plant personnel need to react to low pressure alarms by taking appropriate action to remedy the situation in order to avoid the system piping accidentally filling with water.

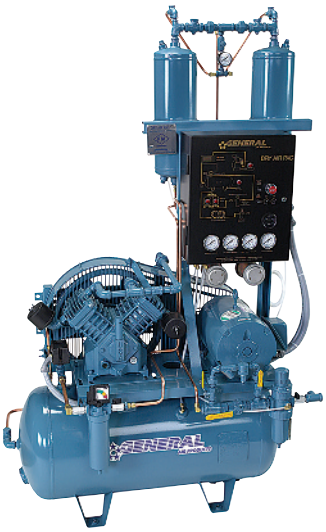

EXHIBIT 8.13 Air Compressor with Regenerative Desiccant Dryer. (Courtesy of General Air Products, Inc.)

8.8.2.2.2 Systems equipped with local low pressure alarms and an automatic air maintenance device shall not be required to alarm to a constantly attended location.

8.8.2.3 Piping Pitch. Piping in refrigerated spaces shall be installed with pitch as outlined in 16.10.3.3.

Any water introduced to a system protecting a very cold environment can freeze in a matter of minutes. Piping is required by 8.8.2.3 to be pitched to aid in the prompt removal of water from the system.

EDUFIRE.IR

8.8.2.4* Air or Nitrogen Supply. Air or nitrogen supply for systems shall be one of the following:

(1) Air from the room of lowest temperature to reduce the moisture content
(2) Air compressor/dryer package listed for the application utilizing ambient air
(3) Compressed nitrogen gas from cylinders used in lieu of compressed air

Taking air supply from the coldest room and then compressing it does not guarantee moisture-free air. However, this arrangement usually provides a reasonable degree of protection against the formation of ice plugs. When the option of taking air from the coldest part of the freezer is applied, the compressor must be able to operate reliably using such cold air, and the inlet pipe must be sized to avoid a negative pressure on the intake port. Paragraph 8.8.2.4, items (1) through (3), permits other means for reducing the moisture content of air more reliably. Paragraph A.8.8.2.4 includes additional information regarding the value to which the pressure dew point should be reduced.

A.8.8.2.4 A higher degree of preventing the formation of ice blocks can be achieved by lowering the moisture of the air supply entering the refrigerated space to a pressure dew point no greater than 20°F (−6.6°C) below the lowest nominal temperature of the refrigerated space. The pressure dew point of the air supply can cause moisture to condense and freeze in sprinkler pipe even when the air supply is from the freezer. One method of reducing the moisture content of the air by use of air drying systems is illustrated in Figure A.8.8.2.4.

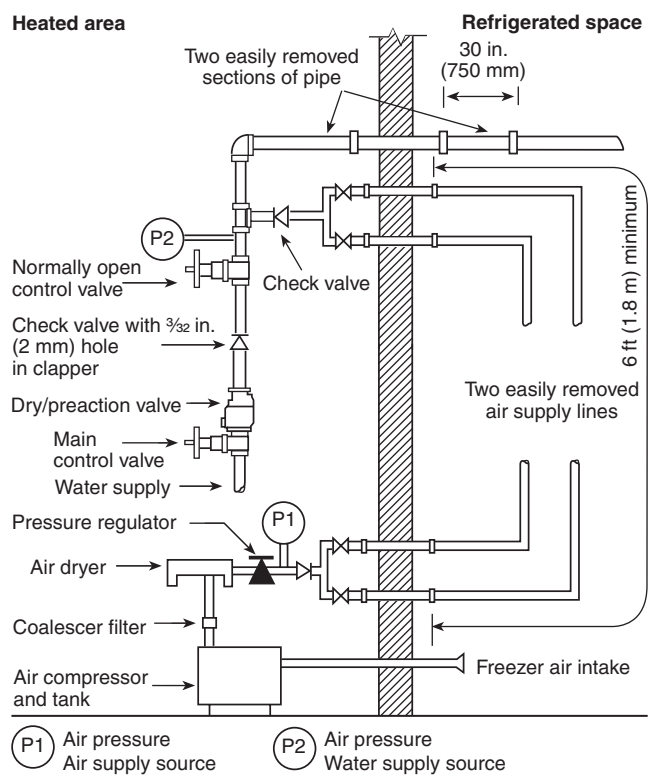

Notes:
1. If pressure gauge P1 and P2 do not indicate equal pressures, it could mean the air line is blocked or the air supply is malfunctioning.
2. Air dryer and coalescer filter not required when system piping capacity is less than 250 gal (946 l).

FIGURE A.8.8.2.4 *Refrigerator Area Sprinkler Systems Used to Minimize Chances of Developing Ice Plugs.*

EDUFIRE.IR

When compressors and dryers are used for an air supply, consideration should be given to pressure requirements of the regenerative dryers, compressor size, air pressure regulator capacity, and air fill rate. Application of these factors could necessitate the use of increased air pressures and a larger air compressor.

The compressed air supply should be properly prepared prior to entering a regenerative-type air dryer, such as minimum air pressure, maximum inlet air temperature, and proper filtration of compressed air.

8.8.2.5* Control Valve. An indicating-type control valve for operational testing of the system shall be provided on each sprinkler riser outside of the refrigerated space.

A.8.8.2.5 A major factor contributing to the introduction of moisture into the system piping is excessive air compressor operation caused by system leakage. Where excessive compressor operation is noted or ice accumulates in the air supply piping, the system should be checked for leakage and appropriate corrective action should be taken.

8.8.2.6* Check Valve.

The check valve is intended to prevent evaporated priming water from migrating into the piping located in the freezer and causing an ice plug to form. However, dry pipe and preaction valves are available that do not require priming water. If priming water is not necessary, the check valve can be omitted, as indicated by 8.8.2.6.2. Additionally, any residual water left in the system riser after a trip test can be drained out of the drain connection at the base of the freezer system water control valve.

A.8.8.2.6 The purpose of the check valve is to prevent evaporation of priming water into the system piping.

8.8.2.6.1 Unless the requirements of 8.8.2.6.2 are met, a check valve with a 3⁄32 in. (2 mm) diameter hole in the clapper shall be installed in the system riser below the test valve required in 8.8.2.5.

8.8.2.6.2 Check valves shall not be required where dry pipe or preaction valves are used and designed to completely drain all water above the seat and that are listed for installation without priming water remaining and where priming water is not used in the system riser.

8.8.2.7 Air or Nitrogen Supply Piping.

8.8.2.7.1* The air or nitrogen supply piping entering the freezer area shall be as stated in 8.8.2.7.1.1 and 8.8.2.7.1.2.

A.8.8.2.7.1 The dual lines feeding the system air entering the cold area are intended to facilitate continued service of the system when one line is removed for inspection. It should be noted that, when using a system as described in Figure A.8.8.2.4, differences in the pressures at gauge P1 and gauge P2 indicate blockage in the air supply line or other malfunctions.

8.8.2.7.1.1 Air Supply.

The supply piping shall be equipped with two easily removable supply lines at least 6 ft (1.8 m) long and at least 1 in. (25 mm) in diameter as shown in Figure 8.8.2.7.1.1(a) or Figure 8.8.2.7.1.1(b).

8.8.2.7.1.2 Nitrogen Supply. The supply piping shall be equipped with a single easily removable supply line at least 6 ft (1.8 m) long and at least 1 in. (25 mm) in diameter.

8.8.2.7.2 Each supply line shall be equipped with control valves located in the warm area.

8.8.2.7.3 Only one air supply line shall be open to supply the system air at any one time.

The requirement in 8.8.2.7.3 that only one line is to be kept open while one line is to remain closed allows the system to remain in service while inspection, testing, and maintenance are completed. If a blockage

EDUFIRE.IR

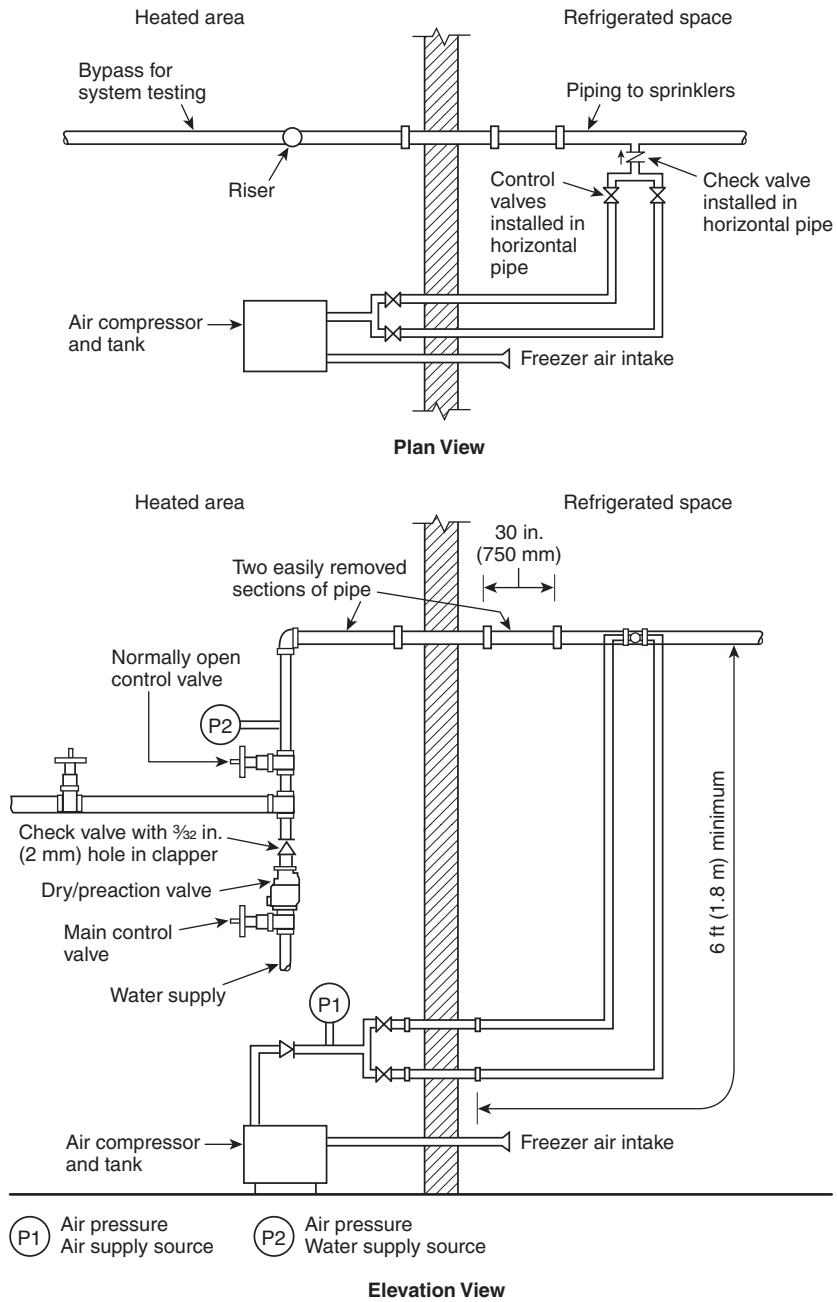

Notes:
1. Check valve with 3⁄32 in. (2 mm) hole in clapper not required if prime water not used.
2. Supply air to be connected to top or side of system pipe.
3. Each removable air line to be a minimum of 1 in. (25 mm) diameter and a minimum of 6 ft (1.8 m) long.

FIGURE 8.8.2.7.1.1(a) *Refrigerator Area Sprinkler System Used to Minimize the Chances of Developing Ice Plugs.*

EDUFIRE.IR

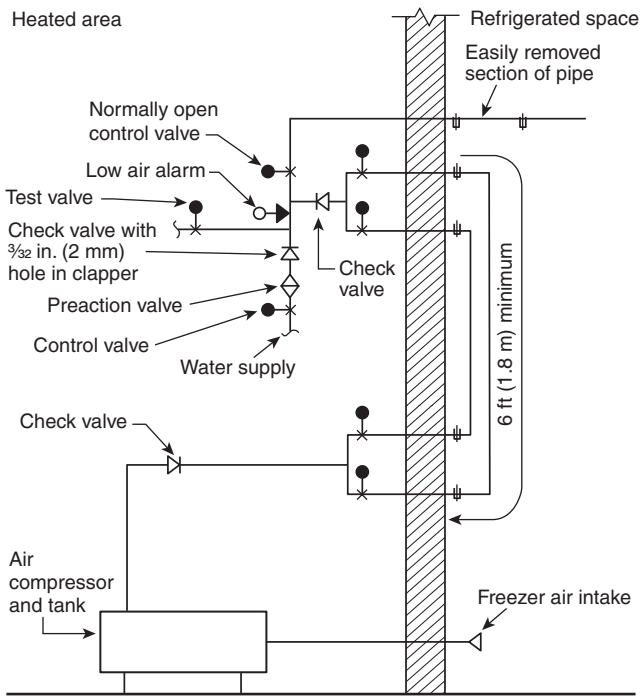

Notes:
1. Check valve with 3/32 in. (2 mm) hole in clapper not required if prime water not used.
2. Each removable air line is to be installed a minimum of 1 in. (25 mm) in diameter and a minimum of 6 ft (1.8 m) long.

FIGURE 8.8.2.7.1.1(b) *Preaction System Arrangement.*

occurs in the open line, the pressure gauges will indicate different pressures, and the line with the blockage can be shut down and cleaned while the other line is opened.

8.8.2.8 Fire Detection for Preaction Release.

8.8.2.8.1 Detectors for Preaction Systems.

8.8.2.8.1.1* The release system shall be designed to operate prior to sprinkler operation, unless detectors meet the requirements of 8.8.2.8.1.2.

(A) Detectors shall be electric or pneumatic fixed temperature type with temperature ratings less than that of the sprinklers.

(B) Detection devices shall not be rate-of-rise type.

A.8.8.2.8.1.1 While it is the intent to require the detection system to operate prior to sprinklers, it is possible that in some fire scenarios the sprinklers could operate prior to the detection system. In general, the detection system, at its installed location and spacing, should be more sensitive to fire than the sprinklers.

8.8.2.8.1.2 Where the system is a double interlock preaction system or single interlock preaction antifreeze system, detection devices shall be permitted to be any type specifically approved for use in a refrigerated area if installed in accordance with their listing requirements and *NFPA 72*.

EDUFIRE.IR

8.8.2.8.2 Detector Location at Ceiling.

8.8.2.8.2.1 Under smooth ceilings, detectors shall be spaced not exceeding their listed spacing.

8.8.2.8.2.2 For other than smooth ceilings, detectors shall not exceed one-half of the listed linear detector spacing or full allowable sprinkler spacing, whichever is greater.

8.8.2.8.3 Detector Location in Racks.

8.8.2.8.3.1 Unless conditions in 8.8.2.8.4 are met, one level of detectors shall be installed for each level of sprinklers.

8.8.2.8.3.2 Detectors shall be installed vertically within one storage level of the rack sprinklers and as follows:

(1) Detectors shall be located in the transverse flue in single-row racks and in the longitudinal flue in double-row racks.
(2) For multiple-row racks, detectors shall be located in either longitudinal or transverse flue space and shall be within 5 ft (1.5 m) horizontally of each sprinkler.
(3) Separate detection systems shall be installed for ceiling sprinkler systems and in-rack sprinkler systems.
(4) Where system is double interlock preaction type, ceiling detection system shall operate solenoid valves on both ceiling and in-rack preaction systems.

8.8.2.8.4 Single Detection System for Ceiling and In-Rack Sprinklers. Ceiling detection only shall be permitted where all of the following conditions are met:

(1) Maximum storage height is 35 ft (11 m).
(2) Maximum ceiling height is 40 ft (12.0 m).
(3) Maximum hazard of storage is Class III.
(4) No solid shelves are present.
(5) One preaction valve is used for both ceiling and in-rack sprinklers protecting the same area, with separate indicating control valves and check valves provided downstream as shown in Figure 8.8.2.8.4.
(6) Detectors at the ceiling are spaced at a maximum of one-half the listed detector spacing but not less than the sprinkler spacing.

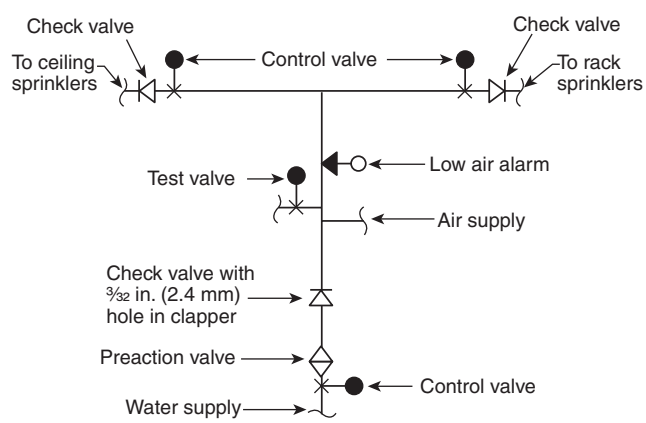

FIGURE 8.8.2.8.4 *Valve Arrangement.*

EDUFIRE.IR

8.9 Commercial-Type Cooking Equipment and Ventilation.

8.9.1 General. In cooking areas protected by automatic sprinklers, additional sprinklers or automatic spray nozzles shall be provided to protect commercial-type cooking equipment and ventilation systems that are designed to carry away grease-laden vapors unless otherwise protected.

Automatic sprinklers are effective for extinguishing grease and cooking oil fires, excluding deep fat fryers, because the fine droplets of the water spray lower the temperatures to below the point at which the fire can sustain itself. The requirements of Section 8.9 are based on research and input from both the cooking equipment ventilation industry and the sprinkler manufacturing industry.

8.9.2* Sprinklers and Automatic Spray Nozzles.

NFPA 96 requires protection of cooking equipment that produces grease-laden vapors. This protection requirement covers not only the cooking equipment but the exhaust system as well.

One way to protect commercial cooking operations that is recognized by NFPA 96, *Standard for Ventilation Control and Fire Protection of Commercial Cooking Operations,* is the use of automatic sprinklers. Sprinklers are an effective way of controlling fires in cooking equipment, filters, and ducts if they are located to cover the cooking surfaces and all areas of an exhaust system to which fires could spread. If all cooking equipment is served by listed grease extractors, the sprinkler protection can be limited to the cooking surfaces, which is the reason for the requirement in 8.9.2.2. Some manufacturers of exhaust systems that incorporate listed grease extractors provide listed built-in water spray fire protection for cooking surfaces in a pre-engineered package ready for connection to the sprinkler system.

Where sprinklers are utilized, they often are applicable only to the cooking surfaces and not to deep fat fryers. Large droplets sprayed onto a fire involving cooking oils in a deep fat fryer can result in sudden and rapid fire spread due to the spattering effect caused by large water droplets striking the surface of burning cooking oil. To avoid this phenomenon, only specifically listed sprinklers can be used for the protection of deep fat fryers (see 8.9.8.2). Subsection 8.9.2 also clarifies how the interface between the sprinkler system and other suppression systems is to be treated.

A.8.9.2 See Figure A.8.9.2.

8.9.2.1 Standard spray sprinklers or automatic spray nozzles shall be so located as to provide for the protection of exhaust ducts, hood exhaust duct collars, and hood exhaust plenum chambers.

8.9.2.2 Unless the requirements of 8.9.2.4 are met, standard spray sprinklers or automatic spray nozzles shall be so located as to provide for the protection of cooking equipment and cooking surfaces.

8.9.2.3 Hoods containing automatic fire-extinguishing systems are protected areas; therefore, these hoods are not considered obstructions to overhead sprinkler systems and shall not require floor coverage underneath.

8.9.2.4 Cooking equipment below hoods that contain automatic fire-extinguishing equipment is protected and shall not require protection from the overhead sprinkler system.

The hood shown in Exhibit 8.14 contains an automatic fire-extinguishing system in accordance with NFPA 96. Therefore, the hood is not considered an obstruction to the sprinkler system, and the perimeter of the hood can be considered similar to a solid wall when positioning the ceiling sprinklers.

EDUFIRE.IR

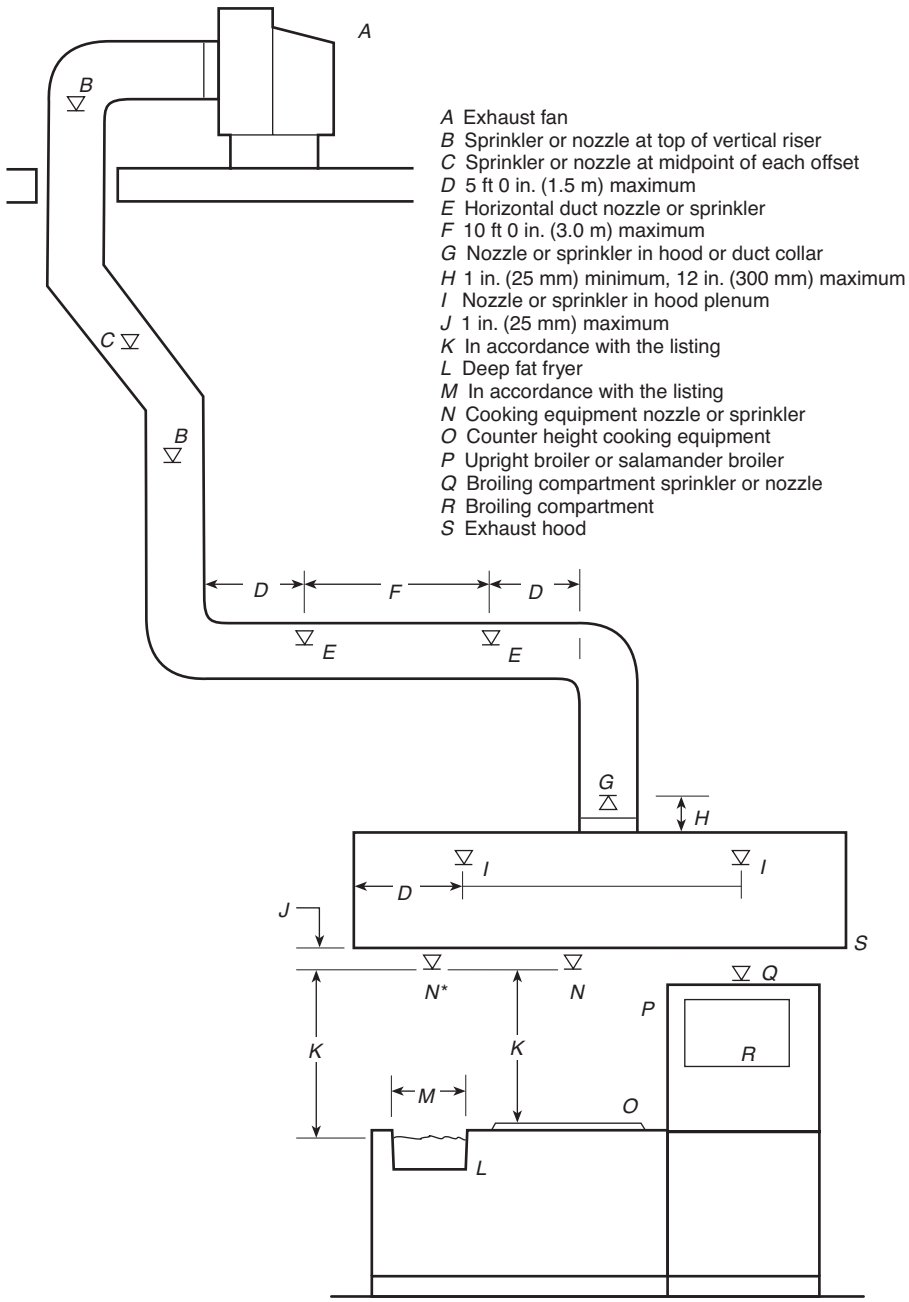

FIGURE A.8.9.2 *Typical Installation Showing Automatic Sprinklers or Automatic Nozzles Being Used for Protection of Commercial Cooking Equipment and Ventilation Systems.*

8.9.3 Sprinkler and Automatic Spray Nozzle Location — Ducts.

Within the duct, any type of standard spray sprinkler can be used, whether it is an upright, pendent, or sidewall sprinkler. Sprinkler activation is not affected by sprinkler type, and the development of a pattern is not a concern within the confined area of a protected duct.

8.9.3.1 Unless the requirements of 8.9.3.2 or 8.9.3.4 are met, exhaust ducts shall have one sprinkler or automatic spray nozzle located at the top of each vertical riser and at the midpoint of each offset.

EDUFIRE.IR

EXHIBIT 8.14 Commercial Cooking Exhaust Hood Protected by a Chemical Extinguishing System.

8.9.3.2 Sprinklers or automatic spray nozzles shall not be required in a vertical riser located outside of a building, provided the riser does not expose combustible material or provided the interior of the building and the horizontal distance between the hood outlet and the vertical riser is at least 25 ft (7.6 m).

8.9.3.3 Unless the requirements of 8.9.3.4 are met, horizontal exhaust ducts shall have sprinklers or automatic spray nozzle devices located on 10 ft (3.0 m) centers beginning no more than 5 ft (1.5 m) from the duct entrance.

8.9.3.4 Sprinklers or automatic spray nozzles shall be required in ducts.

8.9.3.4.1 Where ducts do not exceed 75 ft (23 m) in length and the entire exhaust duct is protected in accordance with NFPA 96, sprinkler(s) or automatic spray nozzle(s) shall not be required.

NFPA 96 provides the protection requirements for commercial cooking operations without limitation on the length of the duct. However, ANSI/UL 300, *Standard for Fire Testing of Fire Extinguishing Systems for Protection of Commercial Cooking Equipment,* which is cited in NFPA 96, is currently used to determine adequate protection for ducts of up to 75 ft (23 m) in length and is used for cooking applications. If a manufacturer successfully passes the tests in UL 300 using a specific sprinkler or spray nozzle assembly in a specific listed hood and duct collar, then additional sprinklers or spray nozzles in the duct are not needed.

8.9.3.5 A sprinkler(s) or an automatic spray nozzle(s) in exhaust ducts subject to freezing shall be properly protected against freezing by approved means. *(See 16.4.1.)*

8.9.4 Sprinkler and Automatic Spray Nozzle Location — Duct Collar.

8.9.4.1 Each hood exhaust duct collar shall have one sprinkler or automatic spray nozzle located 1 in. minimum to 12 in. maximum (25 mm minimum to 300 mm maximum) above the point of duct collar connection in the hood plenum.

8.9.4.2 Hoods that have listed fire dampers located in the duct collar shall be protected with a sprinkler or automatic spray nozzle located on the discharge side of the damper and shall be so positioned as not to interfere with damper operation.

EDUFIRE.IR

8.9.5 Sprinkler and Automatic Spray Nozzle Location — Exhaust Plenum Chambers.

8.9.5.1 Hood exhaust plenum chambers shall have one sprinkler or automatic spray nozzle centered in each chamber not exceeding 10 ft (3.0 m) in length.

8.9.5.2 Plenum chambers greater than 10 ft (3.0 m) in length shall have two sprinklers or automatic spray nozzles evenly spaced, with the maximum distance between the two sprinklers not to exceed 10 ft (3.0 m).

8.9.6 Sprinkler and Automatic Spray Nozzle Temperature Ratings and K-Factors.

8.9.6.1 Where the exposed temperature is expected to be 300°F (149°C) or less, sprinklers or automatic spray nozzles being used in duct, duct collar, and plenum areas shall be of the extra high–temperature classification [325°F to 375°F (163°C to 191°C)].

Under the circumstances described in 8.9.6.1, the sprinklers over the cooking surface must operate first, so that water from the sprinklers in the plenum does not cool the sprinklers and prevent their operation.

8.9.6.2 When use of a temperature-measuring device indicates temperatures above 300°F (149°C), a sprinkler or automatic spray nozzle of higher classification shall be used.

8.9.6.3 Sprinklers or automatic spray nozzles being used in duct, duct collar, and plenum areas shall have orifices with K-factors not less than K-1.4 (20) and not more than K-5.6 (80).

8.9.7 Sprinkler and Automatic Spray Nozzle. Access shall be provided to all sprinklers or automatic spray nozzles for examination and replacement.

The access described in 8.9.7 should not jeopardize the integrity of the hood or duct. NFPA 96 contains requirements for providing access into exhaust ducts.

8.9.8 Cooking Equipment.

8.9.8.1 General. Cooking equipment (such as deep fat fryers, ranges, griddles, and broilers) that is considered to be a source of ignition shall be protected in accordance with the provisions of 8.9.1.

8.9.8.2 Deep Fat Fryers.

8.9.8.2.1 A sprinkler or automatic spray nozzle used for protection of deep fat fryers shall be listed for that application.

8.9.8.2.2 The position, arrangement, location, and water supply for each sprinkler or automatic spray nozzle shall be in accordance with its listing.

As of the printing of this handbook, no sprinklers using only water are listed for the protection of deep fat fryers, as required by 8.9.8.2.1. The remaining cooking equipment can still be protected with standard spray sprinklers. One potential local application solution is contained within the sprinkler device, as shown in Exhibit 8.15, and is supplied as part of a standard wet pipe system.

8.9.8.3 Fuel and Heat Shutoff.

8.9.8.3.1 The operation of any cooking equipment sprinkler or automatic spray nozzle shall automatically shut off all sources of fuel and heat to all equipment requiring protection.

8.9.8.3.2 Any gas appliance not requiring protection but located under ventilating equipment shall also be shut off.

8.9.8.3.3 All shutdown devices shall be of the type that requires manual resetting prior to fuel or power being restored.

EDUFIRE.IR

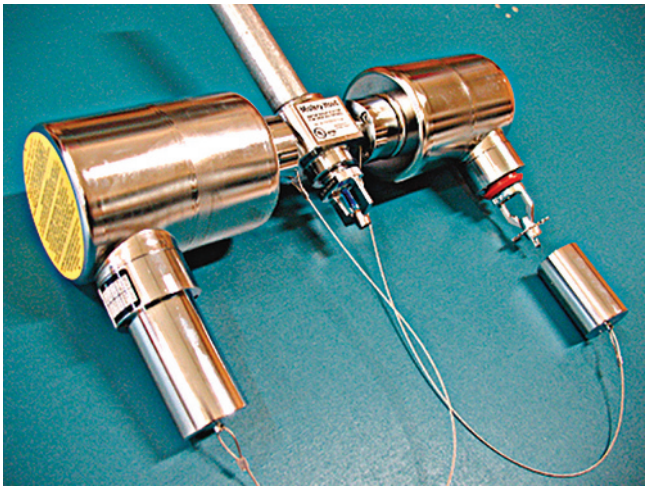

EXHIBIT 8.15 Mistery Hood Deep Fat Fryer Sprinkler. (Courtesy of GW Sprinkler)

8.9.9 Indicating Valves. A listed indicating valve shall be installed in the water supply line to the sprinklers and spray nozzles protecting the cooking and ventilating system.

8.9.10 Strainers. A listed line strainer shall be installed in the main water supply preceding sprinklers or automatic spray nozzles having nominal K-factors smaller than K-2.8 (40).

8.9.11 Test Connection. A system test connection shall be provided to verify proper operation of equipment specified in 8.9.8.3.

8.10 Pilot Line Detectors.

8.10.1 Pilot line detectors and related components including pipe and fittings shall be corrosion resistant when installed in areas exposed to weather or corrosive conditions.

8.10.2 Where subject to mechanical or physical damage, pilot line detectors and related detection system components shall be protected.

Chemicals that are introduced into sprinkler system piping to prevent corrosion could have a detrimental effect on the piping material or joining methods; therefore, such chemicals must be listed for use within these systems. FM Global Approval Standard Class Number 1630, *Steel Pipe for Automatic Fire Sprinkler Systems*, addresses the use of antimicrobial (AMC) and antibacterial coatings/films used in steel pipe systems.

8.10.3 Where spray sprinklers are used as pilot line detectors, they shall be installed in accordance with Section 8.10 and the spacing and location rules of Section 10.2, except that the obstruction to water distribution rules for automatic sprinklers shall not be required to be followed.

8.10.3.1 Where located under a ceiling, pilot sprinklers shall be positioned in accordance with the requirements of Section 10.2.

8.10.4 The temperature rating of spray sprinklers utilized as pilot line detectors shall be selected in accordance with 9.4.2.

EDUFIRE.IR

8.10.5 Maximum horizontal spacing for indoor locations shall not exceed 12 ft (3.7 m).

8.10.6 Pilot line detectors shall be permitted to be spaced more than 22 in. (550 mm) below a ceiling or deck where the maximum spacing between pilot line detectors is 10 ft (3.0 m) or less.

8.10.6.1 Other maximum horizontal spacing differing from those required in 8.10.5 shall be permitted where installed in accordance with their listing.

8.10.7 Pilot line detectors located outdoors, such as in open process structures, shall be spaced such that the elevation of a single level of pilot line detectors and between additional levels of pilot line detectors shall not exceed 17 ft (5.2 m).

8.10.8 The maximum distance between pilot line detectors installed outdoors shall not exceed 8 ft (2.4 m).

8.10.8.1 The horizontal distance between pilot line detectors installed outdoors on a given level shall be permitted to be increased to 10 ft (3.0 m) when all of the following conditions are met:

(1) The elevation of the first level does not exceed 15 ft (4.6 m).
(2) The distance between additional levels does not exceed 12 ft (3.7 m).
(3) The pilot line actuators are staggered vertically.

8.10.8.2 Alternate vertical spacing of pilot line detectors differing from those required in 8.10.8.1 shall be permitted where installed in accordance with their listing.

8.10.9 Pilot line detectors located in open-sided buildings shall follow the indoor spacing rules.

8.10.9.1 A row of pilot line detectors spaced in accordance with the outdoor pilot line detector spacing rules shall be located along the open sides of open-sided buildings.

8.10.9.2 Pilot line detectors located under open gratings shall be spaced in accordance with the outdoor rules.

8.10.9.3 Where two or more adjacent water spray systems in one fire area are controlled by separate pilot line detector systems, the detectors on each system shall be spaced independently as if the dividing line between the systems were a wall or draft curtain.

8.10.9.4 Where pilot line detectors are installed in water cooling tower applications, they shall be in accordance with Section 26.21.

8.10.10 Pipe supplying pilot line detectors shall be permitted to be supported from the same points of hanger attachment as the piping system it serves.

8.10.10.1 Pipe supplying pilot line detectors shall not be required to meet the requirements of Section 18.5.

References Cited in Commentary

National Fire Protection Association, 1 Batterymarch Park, Quincy, MA 02169-7471.

NFPA 25, *Standard for the Inspection, Testing, and Maintenance of Water-Based Fire Protection Systems,* 2017 edition.

NFPA 70®, National Electrical Code®, 2017 edition.

NFPA 72®, National Fire Alarm and Signaling Code®, 2019 edition.

NFPA 80A, *Recommended Practice for Protection of Buildings from Exterior Fire Exposures,* 2017 edition.

NFPA 96, *Standard for Ventilation Control and Fire Protection of Commercial Cooking Operations,* 2017 edition.

EDUFIRE.IR

NFPA 409, *Standard on Aircraft Hangars,* 2016 edition.

FM Global, 1301 Atwood Avenue, P.O. Box 7500, Johnston, RI 02919.
FM Approval 1630, *Steel Pipe for Automatic Fire Sprinkler Systems*, 2013.

Fire Protection Research Foundationx, 1 Batterymarch Park, Quincy, MA 02169-7471.
Antifreeze Solutions Supplied Through Spray Sprinklers — Interim Report, February 2012.

Underwriters Laboratories Inc., 333 Pfingsten Road, Northbrook, IL 60062-2096.
ANSI/UL 300, *Standard for Fire Testing of Fire Extinguishing Systems for Protection of Commercial Cooking Equipment,* 2014.

EDUFIRE.IR

EDUFIRE.IR

CHAPTER

9

Sprinkler Location Requirements

REORGANIZATION NOTE

The new Chapter 9, which comprises certain sections from Chapter 8 of the 2016 edition, contains the general requirements and allowances for all sprinklers related to the specific locations in which sprinklers are required to be installed. The sections involved in the reorganization of this chapter include the following:

- A consolidated list of specific locations where sprinklers can be omitted has been developed into Section 9.2 to compile all the specific allowances that were previously scattered throughout Chapter 8 in the 2016 edition.
- The requirements for special situations have been consolidated into Section 9.3 to combine provisions previously spread throughout Chapter 8 of the 2016 edition into one location.
- The general requirements for the usage of sprinklers from Section 8.3 in the 2016 edition have been incorporated into the new Section 9.4.
- The general requirements for the position, location, and spacing for sprinklers in Section 8.3 of the 2016 edition have been incorporated into the new Section 9.5.

Chapter 9 covers the general requirements for the location of sprinklers applicable to all the various types, with consideration for the impact of building construction features and equipment on satisfactory sprinkler system performance. Also covered in this chapter are allowances for the omission of sprinklers and protection for special situations, the use of sprinklers and the allowable areas per sprinkler, and spacing limitations.

9.1* Basic Requirements.

Basic installation requirements are covered in Section 9.1. Sprinklers must be positioned with regard to other sprinklers, structural and architectural features at the ceiling, and other building systems, such as ductwork and lighting. Failure to do so greatly increases the likelihood of delayed sprinkler activation and of skewed or obstructed sprinkler spray patterns. Limiting distances between sprinklers and locating them where they will properly respond to the heat from fire allows for their timely activation and results in the intended level of fire control or fire suppression. NFPA 13 also recognizes that building features that obstruct sprinkler discharge can negatively affect spray distribution patterns.

A.9.1 The installation requirements are specific for the normal arrangement of structural members. There will be arrangements of structural members not specifically detailed by the requirements. By applying the basic principles, layouts for such construction can vary from specific illustrations, provided the maximums specified for the spacing and location of sprinklers (*see Section 8.4*) are not exceeded.

FAQ [A.9.1]

Are sprinklers required in all spaces?

NFPA 13 requires that sprinklers be provided throughout the premises. However, certain provisions permit sprinklers to be omitted from some spaces where specific conditions are met.

EDUFIRE.IR

Where buildings or portions of buildings are of combustible construction or contain combustible material, standard fire barriers should be provided to separate the areas that are sprinkler protected from adjoining unsprinklered areas. All openings should be protected in accordance with applicable standards, and no sprinkler piping should be placed in an unsprinklered area unless the area is permitted to be unsprinklered by this standard.

Water supplies for partial systems should be designed with consideration to the fact that in a partial system more sprinklers might be opened in a fire that originates in an unprotected area and spreads to the sprinklered area than would be the case in a completely protected building. Fire originating in a nonsprinklered area might overpower the partial sprinkler system.

Where sprinklers are installed in corridors only, sprinklers should be spaced up to the maximum of 15 ft (4.6 m) along the corridor, with one sprinkler opposite the center of any door or pair of adjacent doors opening onto the corridor, and with an additional sprinkler installed inside each adjacent room above the door opening. Where the sprinkler in the adjacent room provides full protection for that space, an additional sprinkler is not required in the corridor adjacent to the door.

Sprinklers are permitted to be omitted from certain spaces where specific conditions are met, including concealed spaces (see 9.2.1), clothes closets in dwelling units (see 9.2.4.2), above cloud ceilings (see 9.2.7), vertical shafts (see 9.3.3), elevator shafts (see 9.3.6), and electrical equipment rooms (see 9.3.21). For the most part, these spaces must be constructed of noncombustible or limited-combustible construction where the introduction of combustible contents and storage is precluded by building use. In some cases, despite the fact that a hazard exists, the installation of sprinklers in the space is not considered practical.

The installation of sprinklers throughout the building ensures that the sprinkler system's effectiveness is not compromised by a fire originating in an unsprinklered space. Fire originating in an unsprinklered area with considerable combustible loading is likely to grow beyond the capability of adjacent sprinklers to achieve control.

9.1.1* The requirements for spacing, location, and position of sprinklers shall be based on the following principles:

(1) Sprinklers shall be installed throughout the premises.
(2) Sprinklers shall be located so as not to exceed the maximum protection area per sprinkler.
(3)* Sprinklers shall be positioned and located so as to provide satisfactory performance with respect to activation time and distribution.
(4) Sprinklers shall be permitted to be omitted from areas specifically allowed by this standard.
(5) When sprinklers are specifically tested and test results demonstrate that deviations from clearance requirements to structural members do not impair the ability of the sprinkler to control or suppress a fire, their positioning and locating in accordance with the test results shall be permitted.
(6) Clearance between sprinklers and ceilings exceeding the maximums specified in this standard shall be permitted, provided that tests or calculations demonstrate comparable sensitivity and performance of the sprinklers to those installed in conformance with these sections.

EDUFIRE.IR

CLOSER LOOK [9.1.1]

Understanding Sprinkler Placement and Spacing

Principles for spacing, location, and position of sprinklers are found in 9.1.1. Unless NFPA 13 specifically permits the omission of sprinklers in a certain area, sprinklers must be installed. In some situations, this requirement can result in conflicts with other regulations. NFPA 13 cannot address every possible situation and arrangement; therefore, the requirements of 9.1.1 provide general guidance to ensure that, where unique situations arise, the fundamental principles are clearly defined.

While NFPA *101*®, *Life Safety Code*®, permits the omission of sprinklers from certain closet sizes in all residential occupancies, NFPA 13 limits the omission of sprinklers in these closets to hotels and motels. Fires originating in these closet sizes in other types of residential occupancies can result in substantial property damage (see 9.2.4.2). The very small number of fires originating in these small closets that results in one or more fatalities justifies the broader exception of NFPA *101*. In other words, NFPA *101* addresses only life safety, while NFPA 13 addresses both life safety and property protection and can justify more stringent requirements.

NFPA 13 does not support the use of partial sprinkler systems, yet it recognizes that other regulations do (see Section 4.1.2). In such cases, NFPA 13 requirements should be followed to the extent possible. When partial sprinkler protection is being considered, it is important to recognize that a fire originating in an unsprinklered space is likely to grow and spread to the sprinklered area, unless some other precautions are taken. Once the fire reaches the sprinklered space, it is likely to be of a size that cannot be controlled or suppressed by a partial system. Sprinkler systems designed and installed in accordance with NFPA 13 are intended to control or suppress fires during their early stages of development. Where property protection is a primary concern and differences exist between NFPA 13 and other standards, the requirements of NFPA 13 should take precedence, and sprinklers should be provided accordingly. If sprinklers are not provided, all parties involved must understand the ramifications of that decision from both a property and a life safety perspective.

Proper placement of automatic sprinklers ensures that sprinklers operate in a timely manner and achieve effective fire control. To accomplish the basic goals indicated in 9.1.1(2) and (3), specific NFPA 13 requirements on spacing, position, coverage, and obstructions to sprinkler discharge must be followed (see Section 9.5). For example, depending on the type of sprinkler, specific dimensions on deflector positioning with respect to various ceiling features and types of obstructions are provided. In some cases, such as unusual ceiling arrangements that contain deep pockets (see 10.2.9) or where heat and smoke vents are used, additional provisions could be necessary. Additionally, where tests or calculations indicate that other arrangements provide at least the same level of performance prescribed by this standard, such other arrangements are permitted to be used in accordance with 9.1.1(5) and (6).

It is not the intent of NFPA 13 to require sprinklers in furniture such as a wardrobe unit, and 9.2.9 provides that clarification. Items such as these would be considered similar to any other piece of furniture with regard to protection from the sprinkler in a room. The location of a wardrobe unit, however, is important to consider. For example, if a wardrobe unit is recessed into an alcove in the room, then further consideration regarding the size of the wardrobe unit, the alcove construction, and the ability of the room sprinkler to control a fire involving the wardrobe unit might be necessary.

A.9.1.1 This standard contemplates full sprinkler protection for all areas including walk-in coolers, freezers, bank vaults, and similar areas. Other NFPA standards that mandate sprinkler installation might not require sprinklers in certain areas. Based upon experience and testing, sprinklers have been found to be effective and necessary at heights in excess of 50 ft (15 m). For a building to meet the intended level of protection afforded by NFPA 13, sprinklers must not be omitted from such high ceiling spaces. The requirements of this standard should be used insofar as they are applicable. The authority having jurisdiction should be consulted in each case. A building is considered sprinklered throughout when protected in accordance with the requirements of this standard.

A.9.1.1(3) Notwithstanding the obstruction rules provided in Chapter 8, it is not intended or expected that water will fall on the entire floor space of the occupancy.

When obstructions or architectural features interfere with the sprinkler's spray pattern, such as columns, angled walls, wing walls, slightly indented walls, and various soffit configurations, shadowed areas can occur. Where small shadowed areas are formed on the floor adjacent to their referenced architectural features, these shadowed areas are purely on paper and do not take into account the dynamic variables of sprinkler discharge. Examples of shadow areas are shown in Figure A.9.1.1(3)(a) and Figure A.9.1.1(3)(b).

In situations such as computer rooms where a gas system is installed, the sprinkler protection should not be eliminated. Many gas systems do not have the same duration requirements of a fire sprinkler system, and if the fire is not extinguished with the initial discharge, the fire could grow large enough to overpower the sprinkler system.

EDUFIRE.IR

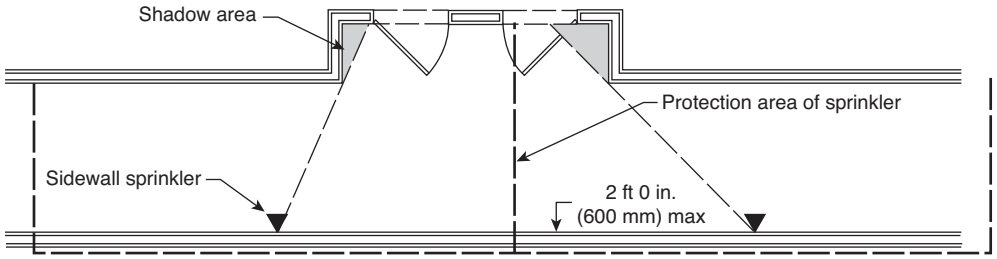

FIGURE A.9.1.1(3)(a) *Shadow Area in Corridor.*

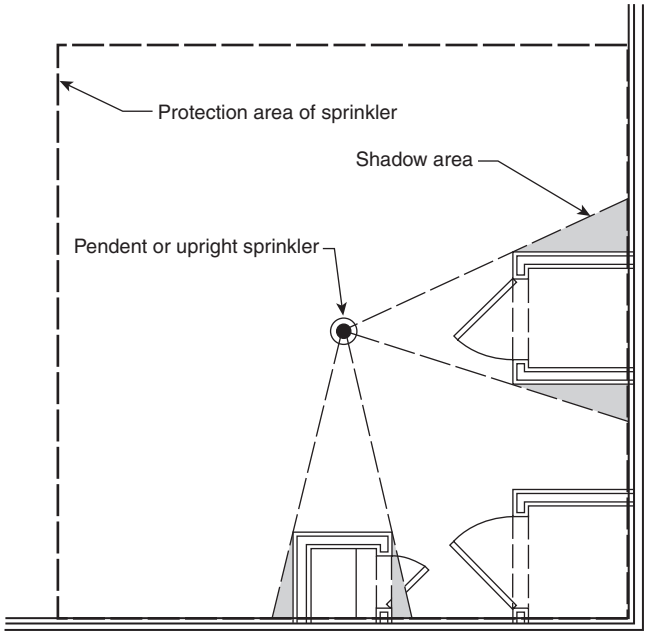

FIGURE A.9.1.1(3)(b) *Example of Shadow Area.*

During the development of the 2013 editions of NFPA 13; NFPA 13D, *Standard for the Installation of Sprinkler Systems in One- and Two-Family Dwellings and Manufactured Homes*; and NFPA 13R, *Standard for the Installation of Sprinkler Systems in Low-Rise Residential Occupancies*, the installation and residential technical committees reviewed dozens of public inputs and comments dealing with proposed definitions and requirements for allowable shadow areas, which are areas not covered by the spray pattern of a sprinkler due to the presence of obstructions. The public inputs and comments were aimed at establishing an area limit for portions of the floor that are not covered by the sprinkler spray pattern due to obstructions.

This concept was handled differently by the technical committees responsible for NFPA 13 and those responsible for NFPA 13R. In NFPA 13, there are multiple sprinkler obstruction rules in place, such as the "Three Times Rule" and the "Four Times Rule," which provide spacing criteria from certain obstructions. These rules essentially allow dry areas where obstructions prevent sprinkler discharge from reaching certain areas of the floor. The presence of these obstruction rules in NFPA 13 prompted the technical committee to reject all the public inputs that recommended adding definitions for shadow areas, along with the proposed requirements citing specific permissible floor areas that would not require sprinkler protection for certain configurations.

NFPA 13R does not have those rules, and its technical committee found value in quantifying maximum allowable dry areas for sprinklers, which is why the standards differ slightly when it comes to the concept of shadow areas.

EDUFIRE.IR

N 9.2 Allowable Sprinkler Omission Locations.

Section 9.2 contains a consolidated list of specific locations where sprinklers can be omitted. It was developed to consolidate all the specific allowances that were scattered throughout Chapter 8 of the 2016 edition.

Section 9.2 can be expected to be a very active part of NFPA 13 during future revision cycles. It is the one section where the basic principle of NFPA 13 — that sprinklers must be installed throughout the premises — is allowed to be altered. During each code development cycle, the Technical Committee on Sprinkler System Installation acts on inputs and comments seeking to "excuse" a specific portion of a building from the requirements of sprinkler protection due to a special situation. The case is typically made that, under certain conditions, the presence of sprinklers does not provide any greater protection, and the omission of sprinklers in these specific areas and spaces within a building should be permitted. (Section 9.3 identifies those spaces and conditions.)

It is important to note the following two points regarding Section 9.2:

1. It is imperative that when the elimination of sprinklers from a space based on this section is being considered, the space must comply exactly with the description and requirements found within the applicable paragraph(s). In other words, any deviation from the description in the applicable paragraph negates its application, and, as a result, the space must be sprinklered.
2. If a space is not specifically detailed in this section, it is intended to be protected by sprinklers under 9.1.1(1).

9.2.1* Concealed Spaces Not Requiring Sprinkler Protection.

The paragraphs and subparagraphs of 9.2.1 specify conditions where sprinklers are not required in concealed spaces that normally would require sprinklers. Sometimes the building is modified to meet one of those exceptions to avoid installing sprinklers in the space. Not all the exceptions provide an equivalent level of fire safety, because some of the exceptions simply recognize that the installation of sprinklers in the space is not physically practical. This difference in level of fire safety is especially true of 9.2.1.3, 9.2.1.4, and 9.2.1.5, which primarily exist to cover situations where sprinklers are retrofitted into existing buildings.

ASK THE AHJ

Are fire sprinklers required in combustible concealed spaces that are entirely on the outside of the building, such as the spaces formed at the eaves of a truss roof or at false facades on the side of the building, where there are no ignition sources?

Yes, unless one of the exceptions in 9.2.1 can be applied.

NFPA 13 is a minimum standard for the protection of property as well as for life safety. Many authorities having jurisdiction recognize the "Murphy's Law" aspect prevalent in the experiences of the fire service, in that a lightning strike could start a fire in such a concealed space.

It is important to note that omitting sprinklers in these spaces might require an increase in the area of operation of the sprinkler system as determined in 19.3.3.1.5. Therefore, A.9.2.1 provides a pointer to ensure a complete evaluation of the impact of omitting sprinklers.

A.9.2.1 Paragraphs 9.2.1.3, 9.2.1.4, and 9.2.1.5 do not require sprinkler protection because it is not physically practical to install sprinklers in the types of concealed spaces discussed in these three exceptions. To reduce the possibility of uncontrolled fire spread, consideration should be given in these unsprinklered concealed space situations to using 9.2.1.7, 9.2.1.11, and 9.2.1.13. Omitting sprinklers from combustible concealed spaces will require further evaluation of the sprinkler system design area in accordance with 19.3.3.1.4.

9.2.1.1* Concealed spaces of noncombustible and limited-combustible construction with minimal combustible loading having no access shall not require sprinkler protection.

FAQ [9.2.1.1]

Where NFPA 13 refers to noncombustible and limited-combustible construction, is the use of those terms in reference to building construction or to the type of combustible loading within the space?

Where NFPA 13 refers to noncombustible and limited-combustible construction, the reference is specifically applicable to the terms as defined in Chapter 3 (see 3.3.114, *Limited-Combustible (Material)*, and 3.3.129, *Noncombustible Material* as they relate to the construction of the space. Regardless of how a material is described, unless it is noncombustible, the material represents a level of combustible loading that might or might not be permitted by NFPA 13. For specific allowances, see 9.2.1.1 through 9.2.1.18.

EDUFIRE.IR

Paragraph 9.2.1.1 is intentionally nondescript in its reference to the combustible loading or opening sizes used to determine the need for sprinklers in the noncombustible concealed space. At the time of design and installation, it is possible to consider the construction of the space and determine what mechanical systems (duct, piping, electrical cabling) might be present in the space. Some authorities have attempted to provide specific requirements for the type and amount of cabling. However, it is almost impossible to determine how much cabling will result in an increase in hazard and what type of cabling will eventually be present in the space, since this material typically is installed long after the sprinkler system. Exhibit 9.1 shows a noncombustible concealed space with typical building service systems present. Note that some communications cabling is in the space, but sprinklers have not been required.

ASK THE AHJ

Is it correct that noncombustible concealed spaces must be protected with sprinklers when they exceed a certain height or depth?

No. There is no limitation in NFPA 13 to the size or dimensions of the concealed space that would trigger the need for sprinklers, so long as the space is truly a concealed space with no combustibles exposed.

DESIGNER'S CORNER [9.2.1.1]

What is *minimal combustible loading* with respect to omitting sprinklers from concealed spaces?

NFPA 13 permits sprinklers to be omitted from concealed spaces that are formed by noncombustible and limited-combustible materials. In other words, in a concealed space without sprinklers, the floor, ceiling, walls, and structural elements of the space must be constructed with noncombustible or limited-combustible materials. This does not prohibit other combustibles from being in the space as long as they do not make up the floor, ceiling, walls, or structural elements of the space.

The concern is for combustibles that will propagate a fire through that space and allow the fire to breach in another location. A single plastic drain pipe in an otherwise noncombustible space is not sufficient to propagate fire through that space. Similarly, a few computer cables spread around an otherwise limited-combustible space will not propagate a fire through that space. But a large bundle of computer cables weighing hundreds of pounds could propagate a fire through a concealed space and would require sprinkler protection. NFPA 13 does allow sprinkler protection in a concealed space to be limited to the area above the combustibles if they are limited to a certain area within the space.

The NFPA 13 Technical Committee on Sprinkler System Installation Criteria was unable to come to a consensus on exactly where to draw the line between those spaces that have sufficient measurable quantities of combustibles to require sprinklers and those that do not. Every situation must be evaluated on a case-by-case basis.

The language in 9.2.1.1 is important because it informs the user that a small amount of combustibles is permitted in an unsprinklered concealed space. Without the language in NFPA 13, some authorities having jurisdiction would require sprinklers in any space that contains any amount — however small — of combustibles. The technical committee responsible for this language wanted to prevent that heavy-handed approach. While this rule does require a certain amount of subjectivity, in most cases people can agree on whether a proposed amount of combustibles will propagate a fire through a space. The horizontal nature of most concealed spaces makes fire propagation extremely difficult because the hot gasses from the fire do not pass over the combustibles to pyrolize them and prepare them for combustion. A simple test using a mock-up of the concealed space and its materials can be performed to determine if the materials, in the form they will be used in the concealed space, will burn sufficiently to allow the fire to break out of the concealed space and spread to a new compartment.

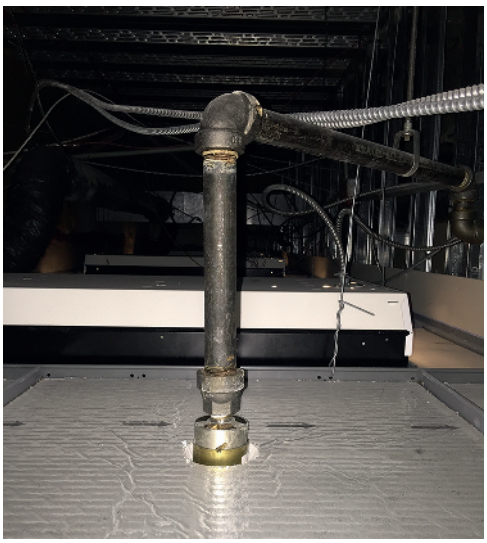

Noncombustible Concealed Space Without Sprinklers. (Courtesy of Blake Cornachini)

EDUFIRE.IR

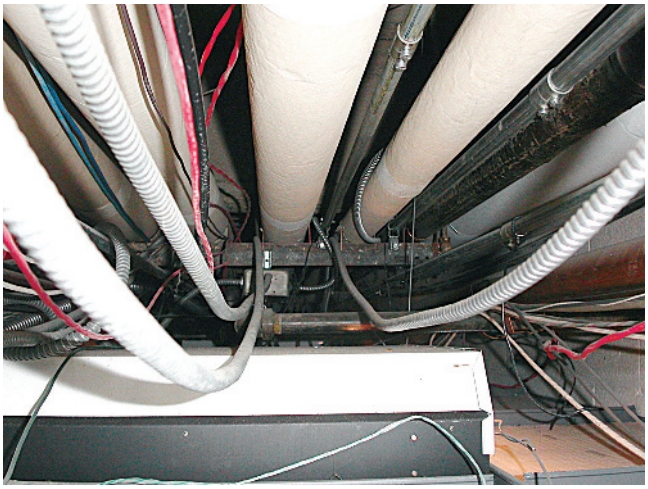

EXHIBIT 9.1 *Noncombustible Concealed Space with Typical Building Services Present.*

A.9.2.1.1 Minor quantities of combustible materials such as, but not limited to, cabling, nonmetallic plumbing piping, nonstructural wood, and so forth can be present in concealed spaces constructed of limited or noncombustible materials but should not typically be viewed as requiring sprinklers *(see 9.3.17.1)*. For example, it is not the intent of this section to require sprinklers, which would not otherwise be required, in the interstitial space of a typical office building solely due to the presence of the usual amount of cabling within the space. The use of acoustical tile ceilings does not negate that the space above the tile is a concealed space because a tile could be removed. The threshold value at which sprinklers become necessary in the concealed space is not defined.

9.2.1.1.1 The space shall be considered a concealed space even with small openings such as those used as return air for a plenum.

The presence of openings in the ceiling, such as those for return air for a plenum, does not result in a perfunctory requirement for sprinklers in the concealed space. Evaluation of the size and number of openings in relation to the overall area of the ceiling is important. Examples of openings to plenum spaces are shown in Exhibit 9.2.

This requirement received considerable attention during the development of the 2013 edition. Ultimately, no change was made to the language, but it is important to understand the components of the debate in order to provide consistent interpretations of the requirement. The debate centered on the question of what constitutes a concealed space and how small openings affect the need for protection within them. Because no data were provided to support the inclusion of specific dimensions or total area in the standard, each type of ceiling and opening requires evaluation regarding heat travel to determine if sprinklers are required in the space above.

EXHIBIT 9.2 *Two Examples of Plenum Openings.*

EDUFIRE.IR

9.2.1.1.2 Small openings with both of the following limits shall be permitted:

(1) A combined total area of not more than 20 percent of the ceiling, construction feature, or plane shall be used to determine the boundaries of the concealed space.
(2) Gaps greater than 4 ft (1.2 m) long shall not be more than 8 in. (200 mm) wide.

9.2.1.2 Concealed spaces of noncombustible and limited-combustible construction with limited access and not permitting occupancy or storage of combustibles shall not require sprinkler protection.

9.2.1.2.1 The space shall be considered a concealed space even with small openings such as those used as return air for a plenum.

9.2.1.3 Concealed spaces formed by studs or joists with less than 6 in. (150 mm) between the inside or near edges of the studs or joists shall not require sprinkler protection. *(See Figure 10.2.6.1.5.1.)*

9.2.1.4 Concealed spaces formed by bar joists with less than 6 in. (150 mm) between the roof or floor deck and ceiling shall not require sprinkler protection.

9.2.1.5* Concealed spaces formed by ceilings attached directly to or within 6 in. (150 mm) of wood joist or similar solid member construction shall not require sprinkler protection.

Paragraph 9.2.1.5 applies to sheathed joist construction or similar narrow spaces formed by the attachment of a ceiling to, or within, 6 in. (150 mm) of joists. This exception is intended to apply only to joists with no openings in the members and with a nominal depth up to 14 in. (350 mm). Similar construction with noncombustible solid members supporting a combustible floor is also covered by 9.2.1.5. (See Exhibit 9.3.)

EXHIBIT 9.3 *Sprinklers Not Required in Narrow Spaces.*

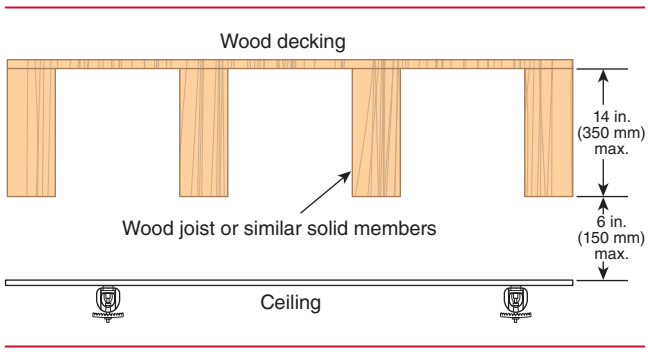

A.9.2.1.5 Solid metal purlin construction with a wood deck is one example of similar solid member construction.

9.2.1.6* Concealed spaces formed by ceilings attached to composite wood joist construction either directly or onto metal channels not exceeding 1 in. (25 mm) in depth, provided the joist channels as measured from the top of the batt insulation are separated into volumes each not exceeding 160 ft3 (4.5 m3) using materials equivalent to the web construction and at least 3½ in. (90 mm) of batt insulation is installed at the bottom of the joist channels when the ceiling is attached utilizing metal channels, shall not require sprinkler protection.

N **A.9.2.1.6** The 3½ in. (90 mm) of insulation is only required when the ceiling is not directly attached to the joist. The 160 ft^3 (4.5 m^3) is the volume of the individual channel excluding the portion occupied by insulation. (*See Figure A.9.2.1.6.*)

EDUFIRE.IR

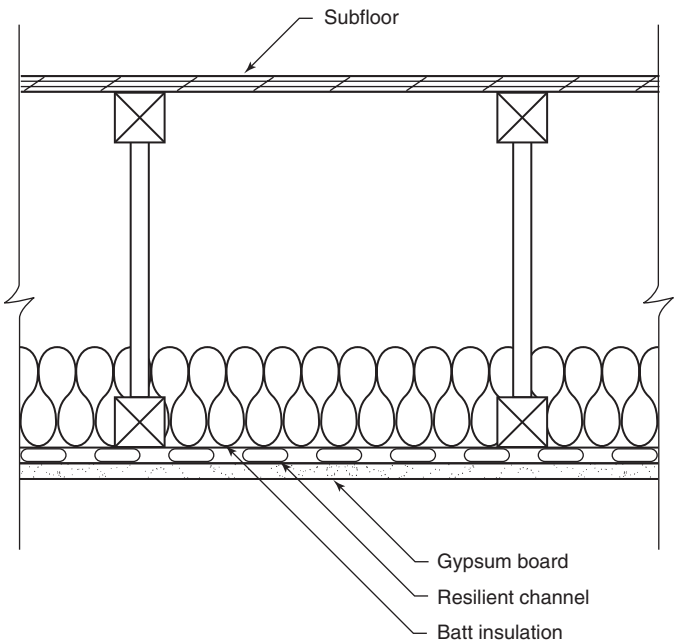

FIGURE A.9.2.1.6 *Combustible Concealed Space Cross Section.*

9.2.1.7 Concealed spaces filled with noncombustible insulation shall not require sprinkler protection.

9.2.1.7.1 A maximum 2 in. (50 mm) air gap at the top of the space shall be permitted.

In some cases, filling an unsprinklered combustible concealed space with noncombustible insulation might be more economically advantageous than installing sprinklers. It is frequently a practical problem to completely fill concealed spaces with insulation. In the 2013 edition, language was added to permit a 2 in. (50 mm) air gap between the top of the insulation and the roof or ceiling above. Exhibit 9.4 provides an example of this requirement.

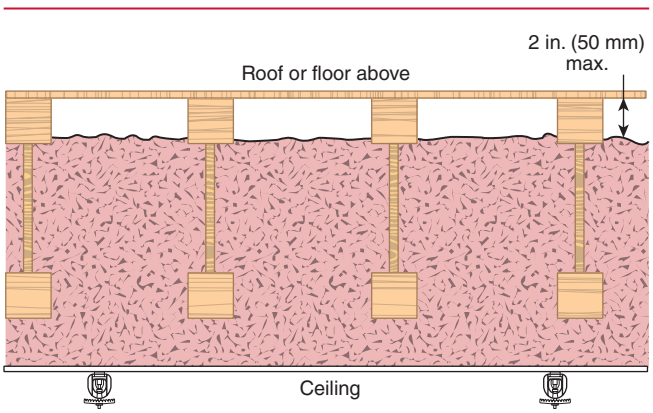

EXHIBIT 9.4 *Insulation Not Required to Completely Fill Space.*

9.2.1.8 Concealed spaces within wood joist construction having noncombustible insulation filling the space from the ceiling up to the bottom edge of the joist of the roof or floor deck shall not require sprinkler protection.

EDUFIRE.IR

N **9.2.1.9** Concealed spaces within composite wood joist construction having noncombustible insulation filling the space from the ceiling up to the bottom edge of the composite wood joist of the roof or floor deck and with the joist channels separated into volumes each not exceeding 160 ft^3 (4.5 m^3) to the full depth of the composite wood joist, with material equivalent to the web construction, shall not require sprinkler protection.

For an example of composite wood joist construction separated into 160 ft^3 (4.5 m^3) volumes, see Exhibit 9.5.

EXHIBIT 9.5 *Limited Open Space Between Composite Wood Joists.*

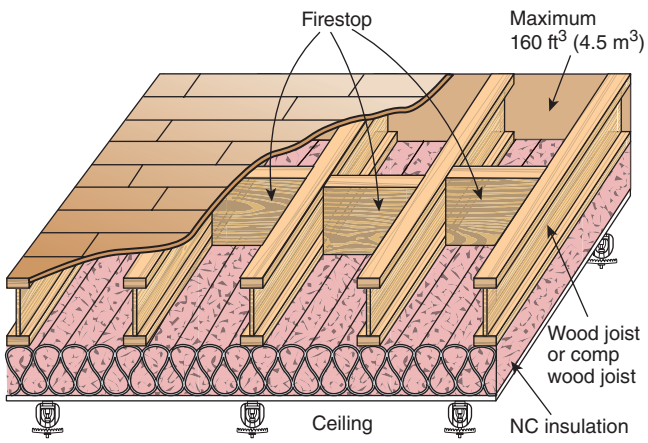

9.2.1.10 Concealed spaces over isolated small compartments not exceeding 55 ft^2 (5.1 m^2) in area shall not require sprinkler protection.

9.2.1.11 Concealed spaces where rigid materials are used and the exposed surfaces, in the form in which they are installed, comply with one of the following shall not require sprinkler protection:

(1) The surface materials have a flame spread index of 25 or less, and the materials have been demonstrated not to propagate fire more than 10.5 ft (3.2 m) when tested in accordance with ASTM E84, *Standard Test Method for Surface Burning Characteristics of Building Materials*, or UL 723, *Standard for Test for Surface Burning Characteristics of Building Materials*, extended for an additional 20 minutes.

(2) The surface materials comply with the requirements of ASTM E2768, *Standard Test Method for Extended Duration Surface Burning Characteristics of Building Materials (30 min Tunnel Test)*.

The requirements of 9.2.1.11 permit the use of limited-combustible materials as a substitute for sprinkler protection. When these materials are being considered, it is important to verify that the testing used to determine each material's combustibility was conducted with the material arranged in the position in which it is to be installed. Changes in the orientation or arrangement of the material can significantly change the flame spread characteristics and the combustibility of the material. Additionally, the materials are required to be rigid, because experience indicates that nonrigid materials do not demonstrate the same characteristics during a fire.

9.2.1.12* Concealed spaces in which the exposed materials are constructed entirely of fire retardant–treated wood as defined by NFPA 703 shall not require sprinkler protection.

A.9.2.1.12 The allowance to omit sprinklers for fire retardant–treated wood requires a pressure-treated application. It does not apply to coated applications.

The intent of A.9.2.1.12 is to provide further guidance regarding the two fire-retardant processes defined in NFPA 703, *Standard for Fire-Retardant–Treated Wood and Fire-Retardant Coatings for Building Materials*, and their relationship to the exemption of sprinklers in 9.2.1.12. Although fire-retardant coatings are not

EDUFIRE.IR

included in 9.2.1.12, nothing in the standard precludes consideration of the use of fire-retardant coatings under the equivalency provisions in Section 1.5.

9.2.1.13 Noncombustible concealed spaces having exposed combustible insulation where the heat content of the facing and substrate of the insulation material does not exceed 1000 Btu/ft^2 (11,400 kJ/m^2) shall not require sprinkler protection.

Paragraph 9.2.1.13 permits the use of paper-coated insulation material in a space that is otherwise defined as a noncombustible space.

9.2.1.14 Concealed spaces below insulation that is laid directly on top of or within wood joists or composite wood joists used as ceiling joists in an otherwise sprinklered concealed space, with the ceiling attached directly to the bottom of the joists, shall not require sprinkler protection.

Paragraph 9.2.1.14 indicates that sprinklers are not required in the space between the insulation in an attic and the ceiling sheathing. The sprinklers in the attic are anticipated to provide sufficient protection. Exhibit 9.6 shows an example of this arrangement.

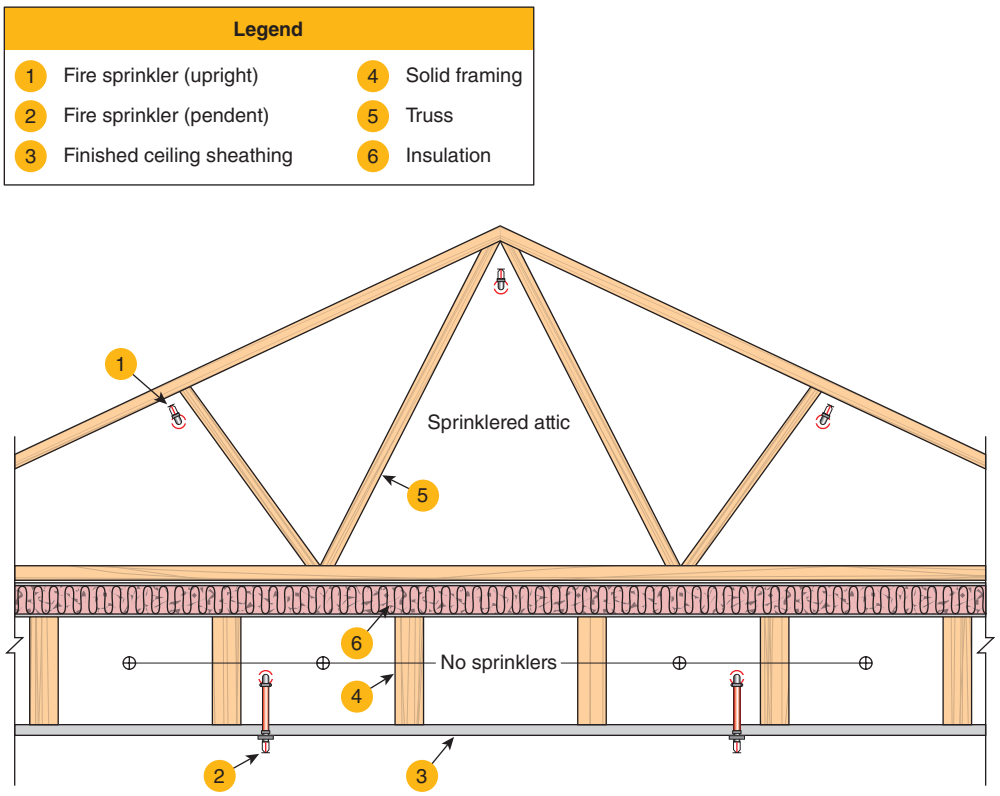

EXHIBIT 9.6 *Sprinklers Not Required Between Joists. (Courtesy of Stephan Laforest)*

9.2.1.15 Sprinklers shall not be required in vertical pipe chases under 10 ft^2 (0.9 m^2).

Paragraph 9.2.1.15 is included in NFPA 13 due to the impracticality of installing sprinklers in the small spaces that are usually behind the walls of bathrooms and kitchens in residential facilities. This requirement supports the premise that sprinklers can be omitted in concealed spaces only where the installation of sprinklers is absolutely impractical, such as those spaces identified by 9.2.1.3, 9.2.1.4, and 9.2.1.5, or where combustibles or ignition sources will not be present. The piping should not add to the combustibility of the space, and it should be noncombustible or water-filled so that the required firestopping at each floor will not be compromised by a pipe that melts or burns.

EDUFIRE.IR

N **9.2.1.15.1** Pipe chases in accordance with 9.2.1.15 shall contain no sources of ignition.

N **9.2.1.15.2** In buildings having more than a single story, pipe penetrations at each floor shall be firestopped using materials equivalent to the floor construction.

9.2.1.16 Exterior columns under 10 ft^2 (0.9 m^2) in area, formed by studs or wood joist supporting exterior canopies that are fully protected with a sprinkler system, shall not require sprinkler protection.

9.2.1.17* Concealed spaces formed by noncombustible or limited-combustible ceilings suspended from the bottom of wood joists, composite wood joists, wood bar joists, or wood trusses that have insulation filling all of the gaps between the bottom of the trusses or joists, and where sprinklers are present in the space above the insulation within the trusses or joists, shall not require sprinkler protection.

A.9.2.1.17 See Figure A.9.2.1.17 for one example.

9.2.1.17.1 The heat content of the facing, substrate, and support of the insulation material shall not exceed 1000 Btu/ft^2 (11,400 kJ/m^2).

9.2.1.18* Concealed spaces formed by noncombustible or limited-combustible ceilings suspended from the bottom of wood joists and composite wood joists with a maximum nominal chord width of 2 in. (50 mm), where joist spaces are full of noncombustible batt insulation with a maximum 2 in. (50 mm) air space between the decking material and the top of the batt insulation shall not require sprinklers.

A.9.2.1.18 See Figure A.9.2.1.18.

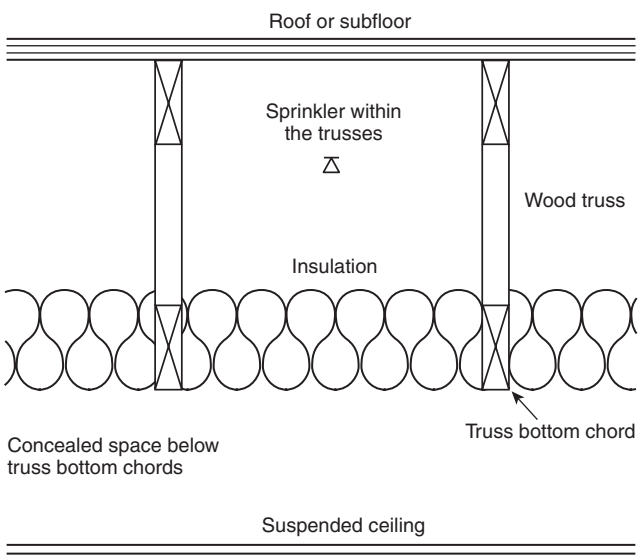

FIGURE A.9.2.1.17 *One Acceptable Arrangement of Concealed Space in Truss Construction Not Requiring Sprinklers.*

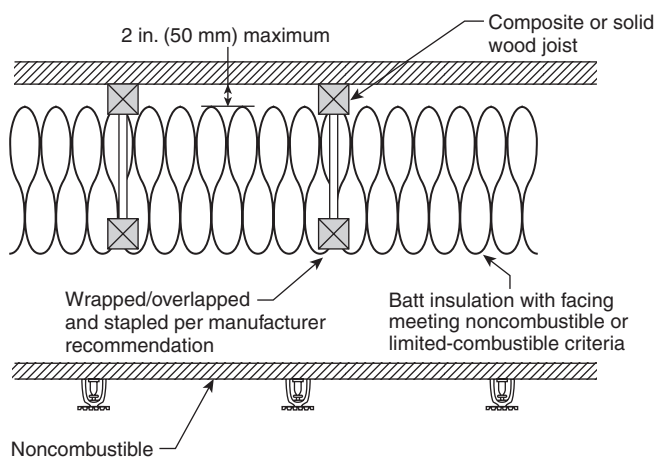

FIGURE A.9.2.1.18 *Acceptable Arrangement of Concealed Space Not Requiring Sprinklers.*

9.2.1.18.1 Facing that meets the requirements for noncombustible or limited-combustible material covering the surface of the bottom chord of each joist and secured in place per the manufacturer's recommendations shall not require sprinklers.

Paragraphs 9.2.1.9, 9.2.1.14, and 9.2.1.17 cover variations of concealed spaces exempt from sprinklers using combustible or noncombustible insulation to define a space. Paragraph 9.2.1.18 requires the joist space to be filled to within 2 in. (50 mm) of the floor or roof deck above with noncombustible batt insulation. It also requires that the exposed bottom surface of the bottom chord of the joists be covered with the batt insulation's facing material in accordance with the manufacturer's recommended fastening requirements.

EDUFIRE.IR

9.2.1.19 Exterior Soffits, Eaves, Overhangs, and Decorative Frame Elements.

Exhibit 9.7 depicts an overhang— — forming an exterior projection. These types of structures are typically of combustible construction. If these spaces conform to 9.2.1.19, however, there is little or no chance that a fire in this space would spread into the building; therefore, there is no need to require sprinkler protection.

EXHIBIT 9.7 Decorative Overhang Forming an Exterior Projection.

9.2.1.19.1 Sprinklers shall be permitted to be omitted from within combustible soffits, eaves, overhangs, and decorative frame elements that are constructed in accordance with 9.2.1.19.2 through 9.2.1.19.5.

9.2.1.19.2 Combustible soffits, eaves, overhangs, and decorative frame elements shall not exceed 4 ft 0 in. (1.2 m) in width.

9.2.1.19.3 Combustible soffits, eaves, overhangs, and decorative frame elements shall be draftstopped, with a material equivalent to that of the soffit, into volumes not exceeding 160 ft^3 (4.5 m^3).

9.2.1.19.4 Combustible soffits, eaves, overhangs, and decorative frame elements shall be separated from the interior of the building by walls or roofs of noncombustible or limited-combustible construction.

9.2.1.19.5 Combustible soffits, eaves, overhangs, and decorative frame elements shall have no openings or unprotected penetrations directly into the building.

9.2.2 Spaces Under Ground Floors, Exterior Docks, and Platforms. Sprinklers shall be permitted to be omitted from spaces under ground floors, exterior docks, and platforms where all of the following conditions exist:

(1) The space is not accessible for storage purposes and is protected against accumulation of wind-borne debris.
(2) The space contains no equipment such as conveyors or fuel-fired heating units.
(3) The floor over the space is of tight construction.
(4) No combustible or flammable liquids or materials that under fire conditions would convert into combustible or flammable liquids are processed, handled, or stored on the floor above the space.

Subsection 9.2.2 is another exception to the general requirement that all combustible spaces must be sprinklered. It recognizes the possibility of maintenance problems, such as lack of access and danger of freezing where piping is located under a floor. The conditions of 9.2.2 intend to eliminate sources of ignition from the concealed space and prevent combustibles from being stored or trash from accumulating,

EDUFIRE.IR

thereby limiting combustibles to the floor materials. Many combustible and flammable liquids are heavier than air, so there is a concern in situations described in 9.2.2(4) that flammable or combustible gases could collect in the space below ground floors and become an explosion or fire hazard.

N **9.2.3* Exterior Projections.**

A.9.2.3 Exterior projections include, but are not limited to, exterior roofs, canopies, porte-cocheres, balconies, decks, or similar projections.

N **9.2.3.1** Unless the requirements of 9.2.3.2, 9.2.3.3, or 9.2.3.4 are met, sprinklers shall be installed under exterior projections exceeding 4 ft (1.2 m) in width.

Exterior canopies exceeding 4 ft (1.2 m) in width that are constructed of combustible materials must be sprinklered, unless they meet the requirements of 9.2.3.2 and 9.2.3.3 and they do not have combustible goods stored or handled underneath them. Canopies less than 4 ft (1.2 m) in width do not need to be sprinklered, regardless of construction type, provided no combustibles are stored beneath them.

Balconies, such as those on multistory apartment buildings, that are under 4 ft (1.2 m) in width do not require sprinkler protection. Balconies more than 4 ft (1.2 m) in width are required to be sprinklered, unless the omissions permitted by 9.2.3.2, 9.2.3.3, or 9.2.3.4 are met.

9.2.3.2* Sprinklers shall be permitted to be omitted where the exterior canopies, roofs, porte-cocheres, balconies, decks, and similar projections are constructed with materials that are noncombustible, limited-combustible, or fire retardant–treated wood as defined in NFPA 703, or where the projections are constructed utilizing a noncombustible frame, limited-combustibles, or fire retardant–treated wood with an inherently flame-resistant fabric overlay as demonstrated by Test Method 2 in accordance with NFPA 701.

Sprinklers can be omitted if the canopy construction assembly is composed entirely of noncombustible, limited-combustible, or fire-retardant materials and the area underneath is essentially restricted to pedestrian use. The reference to noncombustible and limited-combustible construction applies to the entire canopy assembly and not just to the exposed surface. Cases in which the exterior roof or canopy is surfaced with noncombustible, limited-combustible, or fire-retardant-treated materials normally require sprinklers, but sprinklers can be omitted if the requirements of 9.2.3.2 are met.

The roof canopy typically found on strip shopping malls, where the area under the canopy is limited to pedestrians, is an example of this condition where pedestrian traffic is the primary use. Areas where automobiles stop briefly to pick up or drop off passengers are not considered storage areas. Areas located at drive-in bank windows or porte-cocheres at motels and hotels normally do not require sprinklers. However, the area under the exterior ceiling shown in Exhibit 9.8 requires sprinkler protection. The space is used primarily for parking vehicles, and the remainder of the building is sprinklered.

Sprinklers are required under all such coverings where combustible goods are stored.

EXHIBIT 9.8 *Parking Area Under Exterior Ceiling That Is Required to Be Sprinklered.*

EDUFIRE.IR

A.9.2.3.2 Vehicles that are temporarily parked are not considered storage. Areas located at drive-in bank windows or porte-cocheres at hotels and motels normally do not require sprinklers where there is no occupancy above, where the area is entirely constructed of noncombustible or limited-combustible materials or fire retardant–treated lumber, and where the area is not the only means of egress.

9.2.3.3 Sprinklers shall be permitted to be omitted from below the exterior projections of combustible construction, provided the exposed finish material on the exterior projections are noncombustible, limited-combustible, or fire retardant–treated wood as defined in NFPA 703, and the exterior projections contain only sprinklered concealed spaces or any of the following unsprinklered combustible concealed spaces:

(1) Combustible concealed spaces filled entirely with noncombustible insulation
(2) Light or ordinary hazard occupancies where noncombustible or limited-combustible ceilings are directly attached to the bottom of solid wood joists so as to create enclosed joist spaces 160 ft^3 (4.5 m^3) or less in volume, including space below insulation that is laid directly on top or within the ceiling joists in an otherwise sprinklered attic *[see 19.3.3.1.5.2(4)]*
(3) Concealed spaces over isolated small exterior projections not exceeding 55 ft^2 (5.1 m^2) in area

Sprinklers are permitted to be omitted from a combustible roof, canopy, or porte-cochere where the exterior surfaces are of noncombustible, limited-combustible, or fire-retardant materials; where the roof, canopy, or porte-cochere contains only combustible concealed spaces that are completely filled with noncombustible insulation; where the concealed space is formed when the noncombustible surface is directly attached to joists so as to create spaces of 160 ft^3 (4.5 m^3) or less in volume; or where the area is less than 55 ft^2 (5.1 m^2). None of these conditions requires sprinklers per 9.2.1.

9.2.3.4 Sprinklers shall be permitted to be omitted from an exterior exit corridor where the exterior wall of the corridor is at least 50 percent open and where the corridor is entirely of noncombustible construction.

Exit corridors, such as those that might be found on the outside of a motel or similar structure, do not normally contain combustibles and do not require sprinklers, provided that the corridor is constructed entirely of noncombustible materials and the exterior walls are 50 percent open so that there is access for fire fighting if a fire occurs.

N **9.2.3.5** Sprinklers shall be installed under all exterior projections greater than 2 ft (600 mm) where combustibles are stored.

Paragraph 9.2.3.5 requires sprinklers to be installed under exterior roofs, canopies, or porte cocheres where combustibles are stored, but it does not define the amount of combustibles that must be present. Paragraph A.9.3.20.2 clarifies that temporary "storage," such as newspaper vending machines and planters, is not sufficient to justify sprinklers. Another example of temporary storage that does not justify sprinklers is an automobile stopped at a bank's drive-up window or parked under a hotel's porte cochere used for unloading luggage and checking in.

FAQ [9.2.3.5]

Does the presence of patio furniture on exterior balconies necessitate sprinklers for all balconies?

The committee has stated that combustibles such as patio furniture, which may be wood or plastic and include cushions, are not sufficient to justify sprinkler protection for balconies that would not otherwise require sprinkler protection. However, judgment is needed, and sprinklers might be justified where the balcony contains combustible loading such as patio furniture and where barbeque grills are allowed or other ignition sources are present, such as a furnace located off, and accessed from, the balcony.

9.2.4 Dwelling Units.

The risk associated with not providing sprinkler protection in the spaces described in 9.2.4 is considered acceptable because of the small incidence of fires, property damage, and fatalities that occur in these spaces. A specific limit, however, is imposed on the size of the space, its location, and the type of occupancy in which it is located.

9.2.4.1 Bathrooms.

Paragraph A.3.3.16 clarifies what constitutes a bathroom. For example, a bathroom could contain a toilet and a tub but no sink, and an adjacent room that contains a sink could also be considered a bathroom. Over the years, NFPA 13 has revised the requirements for omitting sprinklers in small bathrooms located within dwelling units. The 2013 edition limited the omission to hotel and motels with transient occupancies. However, the 2016 edition returned to the previous allowance to omit sprinklers from small bathrooms as defined in A.3.3.16 unless specifically required by 9.2.4.1.2 or 9.2.4.1.3.

9.2.4.1.1* Unless sprinklers are required by 9.2.4.1.2 or 9.2.4.1.3, sprinklers shall not be required in bathrooms that are located within dwelling units, that do not exceed 55 ft^2 (5.1 m^2) in area, and

EDUFIRE.IR

that have walls and ceilings of noncombustible or limited-combustible materials with a 15-minute thermal barrier rating, including the walls and ceilings behind any shower enclosure or tub.

A.9.2.4.1.1 A door is not required in order to omit sprinklers as long as the bathroom complies with the definition for compartment.

9.2.4.1.2 Sprinklers shall be required in bathrooms of limited care facilities and nursing homes, as defined in NFPA *101*.

9.2.4.1.3 Sprinklers shall be required in bathrooms opening directly onto public corridors or exitways.

FAQ [9.2.4.2]

Are sprinklers permitted to be omitted from closets within all dwelling units?

Sprinklers are permitted to be omitted in closets that are limited to clothes and linen, as well as pantry-type closets, in hotel and motel guest rooms only. This provision does not extend to any other types of dwelling units, such as apartments, nursing homes, dormitories, condominiums, or other residential properties that are not defined as a hotel or motel. Closets in hotels and motels are not expected to contain the types and quantities of combustibles typically found in the closets of residences due to the transient nature of the occupancy.

9.2.4.2* Closets and Pantries. Sprinklers are not required in clothes closets, linen closets, and pantries within dwelling units in hotels and motels where the area of the space does not exceed 24 ft^2 (2.2 m^2) and the walls and ceilings are surfaced with noncombustible or limited-combustible materials.

A.9.2.4.2 Portable wardrobe units, such as those typically used in nursing homes and mounted to the wall, do not require sprinklers to be installed in them. Although the units are attached to the finished structure, this standard views those units as pieces of furniture rather than as a part of the structure; thus, sprinklers are not required.

9.2.5* Hospital Clothes Closets. Sprinklers shall not be required in clothes closets of patient sleeping rooms in hospitals where the area of the closet does not exceed 6 ft^2 (.6 m^2), provided the distance from the sprinkler in the patient sleeping room to the back wall of the closet does not exceed the maximum distance permitted by 9.5.3.2.

A.9.2.5 This exception is limited to hospitals as nursing homes, and many limited-care facilities can have more combustibles within the closets. The limited amount of clothing found in the small clothes closets in hospital patient rooms is typically far less than the amount of combustibles in casework cabinets that do not require sprinkler protection, such as nurse servers. In many hospitals, especially new hospitals, it is difficult to make a distinction between clothes closets and cabinet work. The exception is far more restrictive than similar exceptions for hotels and apartment buildings. NFPA 13 already permits the omission of sprinklers in wardrobes *[see 9.2.9]*. It is not the intent of this paragraph to affect the wardrobe provisions of NFPA 13. It is the intent that the sprinkler protection in the room covers the closet as if there was no door on the closet *(see 9.5.3.2)*.

9.2.6* Sprinklers shall not be required in electrical equipment rooms where all of the following conditions are met:

(1) The room is dedicated to electrical equipment only.
(2) Only dry-type or liquid-type with listed K-class fluid electrical equipment is used.
(3) Equipment is installed in a 2-hour fire-rated enclosure including protection for penetrations.
(4) Storage is not permitted in the room.

Prior to the 1994 edition of NFPA 13, all electrical rooms were required to be sprinklered, in accordance with the basic requirement of 9.1.1(1) for sprinklers throughout the premises. Hoods or shields of noncombustible construction were called for to prevent direct contact between important electrical equipment and sprinkler discharge.

While sprinkler systems had been successfully installed in rooms containing electrical equipment for 100 years, with no documented instances of a problem, this measure was always controversial, based on concerns for fire fighters responding to fires in electrical equipment rooms where sprinklers might be discharging over live equipment. There was also concern that water would cause additional damage to the electrical equipment. Consequently, text was introduced in the 1994 edition to permit the omission of sprinklers in electrical rooms where only dry-type electrical equipment is used (i.e., no oils used to insulate or cool the equipment). Such rooms are to be dedicated to electrical equipment only, are to have a two hour fire resistance rating, and are not permitted to contain combustible storage. This guidance was provided to ensure that fire cannot spread beyond the room of fire origin and to limit the fuel loading in an electrical equipment room.

For the 2016 revision cycle, the requirement for hoods or shields was deleted. The consensus of the Technical Committee on Sprinkler System Installation was that, despite it having been in the standard for

EDUFIRE.IR

many years, the provision was actually under the scope of the electrical code, rather than that of the sprinkler standard. For the 2019 edition, new annex text addresses situations where sprinklers are required to be installed. Clarification has been added to explain where the sprinklers and piping are allowed to be located in relation to the electrical equipment. (See A.9.2.6.)

For the 2019 edition, the following two additional revisions were introduced for rooms where sprinklers are permitted to be omitted:

1. Because the concern for allowing noncombustible storage in an electrical room could inadvertently lead to the introduction of combustible materials as well, it was decided that no storage of any kind should be permitted in the rooms.
2. To align with changes introduced to the electrical codes, it was decided that as well as dry-type electrical equipment (with no oils), liquid-type equipment with listed K-class equipment (less flammable, nonpropagating fluids) also would be allowed in nonsprinklered rooms.

N **A.9.2.6** Sprinklers and sprinkler piping is permitted in and is permitted to pass through an electrical room as long as the piping is not within the "dedicated electrical space" as defined by *NFPA 70*.

In 110.26(E)(1)(a) of *NFPA 70*, a dedicated electrical space is defined as the space equal to the width and the depth of the equipment extending from the floor to a height of 6 ft (1.8 m) above the equipment or the structural ceiling, whichever is lower. This section further states that no foreign systems are allowed in this zone. So, as long as the sprinkler piping does not run through this dedicated electrical space, it can go in and out of the electric room without issue. Paragraph 110.26(E)(1)(b) of *NFPA 70* allows foreign systems in the area above the dedicated electrical space as long as the electrical equipment is properly protected against leaks or breaks in the foreign system. So the sprinkler piping can run above the dedicated electrical space [6 ft (1.8 m) above equipment] as long as the equipment below is protected from leaks. Additionally, sprinklers and sprinkler piping are not permitted to be located directly within the working space for the equipment as defined by *NFPA 70*. See Figure A.9.2.6.

FAQ [A.9.2.6]

Can sprinkler system piping be located in a dedicated electrical equipment space?

Only under very specific circumstances can sprinkler piping (or any other piping, including plumbing or other equipment) be located in the dedicated space. As indicated in *NEC* Section 110.26(E)(1) and Section 9.26 of NFPA 13, sprinklers are required in an electrical equipment room but may be omitted in specific cases. When sprinklers or sprinkler piping must pass thorugh such an area, the clearances required by the *NEC* and repeated in 9.2.6 must be followed. See Figure A.9.2.6 for the proper positioning of system piping.

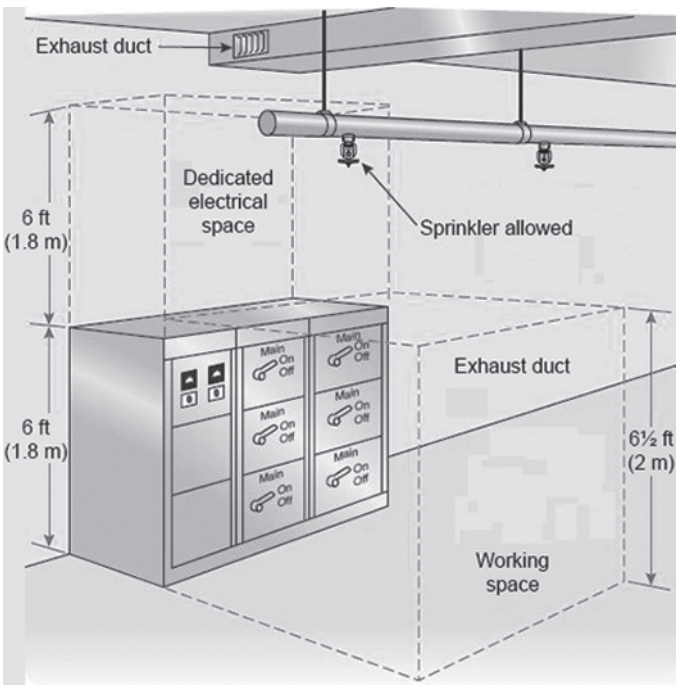

N ***FIGURE A.9.2.6*** *The Working Space and the Dedicated Electrical Space.*

EDUFIRE.IR

The following is an excerpt from the 2017 edition of *NFPA 70®, National Electrical Code® (NEC®),* which is referenced in A.9.2.6 of NFPA 13.

> **110.26 Spaces About Electrical Equipment.** Access and working space shall be provided and maintained about all electrical equipment to permit ready and safe operation and maintenance of such equipment.
>
> **110.26 (E)(1)(a)** *Dedicated Electrical Space.* The space equal to the width and depth of the equipment and extending from the floor to a height of 1.8 m (6 ft) above the equipment or to the structural ceiling, whichever is lower, shall be dedicated to the electrical installation. No piping, ducts, leak protection apparatus, or other equipment foreign to the electrical installation shall be located in this zone.
>
> *Exception: Suspended ceilings with removeable panels shall be permitted within the 1.8m (6 ft) zone.*
>
> **110.26 (E)(1)(b)** *Foreign Systems.* The area above the dedicated space required by 110.26(E)(1)(a) shall be permitted to contain foreign systems, provided protection is installed to avoid damage to the electrical equipment from condensation, leaks, or breaks in such foreign systems.
>
> **110.26 (E)(1)(c)** *Sprinkler Protection.* Sprinkler protection shall be permitted for the dedicated space where the piping complies with this section.

This requirement only applies to switchboards, panelboards, switchgear, or motor control centers. The dedicated electrical space extends the footprint of the equipment from the floor to a height of 6 ft above the height of the equipment or to the structure (whichever is lower).

The dedicated space is required to be clear of piping, ducts, leak protection apparatus, or equipment foreign to the electrical installation. Plumbing, heating, ventilation, and air conditioning piping, ducts, and equipment must be installed outside this space. Busways, conduits, raceways, and cables are permitted to enter equipment through this zone.

Foreign systems installed directly above the dedicated space reserved for electrical equipment are required to include protctive equipment that ensures that occurrences such as leaks, condensation, and even breaks do not damage the electrical equipment located below.

Sprinkler protection is permitted for the dedicated space. The sprinkler or other suppression system piping must comply with 110.26(E)(1) of the *NEC*.

Leak protection could include drip pans which may create an obstruction to sprinkler system discharge. It is always best to avoid locating sprinklers and sprinkler piping directly above electrical equipment for this reason. Following the layout depicted in Figure A.9.2.6 avoids this problem.

9.2.7 Cloud Ceilings.

The requirements pertaining to cloud ceilings were added in the 2016 edition following a Fire Protection Research Foundation (FPRF) project studying the behaviors of heat and smoke in compartments where ceilings are not attached to all walls in a variety of configurations, shapes, heights, and gap distances.

Historically, sprinklers have been required both above and below cloud ceilings, such as the one shown in Exhibit 9.9, unless the cloud ceiling is within 12 in. (300 mm) of the upper ceiling. For several revision cycles, the technical committees responsible for NFPA 13 have studied situations where sprinklers could safely be omitted from above the cloud ceiling. It was determined that to qualify any omission above a cloud ceiling, testing must be conducted. Following the revision cycle that generated the 2013 edition of the standard, the FPRF Sprinkler Research Council put a high priority on the need to resolve this issue.

SEE ALSO

The "Sprinkler Protection for Cloud Ceilings" feature located at the end of this chapter for more on the research behind the requirements in 9.2.7.

9.2.7.1* Sprinklers shall be permitted to be omitted above cloud ceilings where all of the following apply:

(1)* The combined total area of the openings around the cloud are less than or equal to 20 percent of the area of the ceiling, construction feature, or plane used to determine the boundaries of the compartment.

(2) The width of the gap and the maximum sprinkler protection area are in accordance with Table 9.2.7.1.

(3) The requirements of 9.2.7.2 are met.

(4) Spaces above cloud ceilings contain either noncombustible or limited-combustible construction with minimal combustible loading.

EDUFIRE.IR

EXHIBIT 9.9 Cloud Ceiling. (Photo Courtesy of Armstrong World Industries)

TABLE 9.2.7.1 *Maximum Sprinkler Protection Area Based on Ceiling Cloud Width and Opening Width*

Ceiling Cloud — Minimum Width Dimension (ft)	*Maximum Area (ft²) — Opening Width ≤0.5 in./ft of Ceiling Height*	*Maximum Area (ft²) — Opening Width ≤0.75 in./ft of Ceiling Height*	*Maximum Area (ft²) — Opening Width ≤1 in./ft of Ceiling Height*
2–<2.5	175	70	NP
2.5–4	225	120	70
>4	225	150	150

While no maximum gap between ceiling clouds is explicitly stated in 9.2.7.1, the last column of Table 9.2.7.1 does provide a maximum gap width of less than or equal to 1 in./ft (8mm/m) of ceiling height. The gap cannot be greater than this value because Table 9.2.7.1 offers no guidance on the maximum coverage area. This limitation is consistent with the FPRF findings noted in A.9.2.7.1.

A.9.2.7.1 An opening in the ceiling can be located along a wall or can occur between panels to give an architectural effect such as a floating ceiling. Fire modeling results have shown that there will be heat loss to the space above the ceiling when the openings are too large. The modeling results indicate that sprinklers should activate on the lower ceiling level when the opening dimension is no greater than 1 in. per ft (8 mm/m) of elevation above the floor. When an opening between ceiling panels, or a ceiling panel and a wall, are any larger, the space above the ceiling panels should not be considered a concealed space. Figure A.9.2.7.1 shows plan and elevation views of a cloud ceiling installation.

EDUFIRE.IR

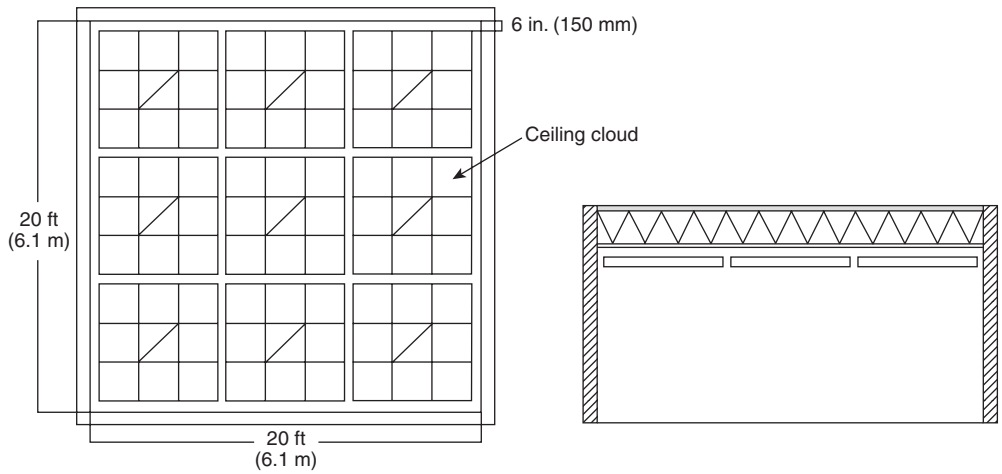

FIGURE A.9.2.7.1 *Cloud Ceiling Openings.*

A.9.2.7.1(1) To determine the maximum allowed gap distance for omission of sprinklers above cloud ceilings, the following formula can be used:

$$A/B = X \qquad \textbf{[A.9.2.7.1(1)]}$$

where:

A = inches of gap between clouds or between a cloud and a wall

B = ceiling height

X = maximum inches of gap

Example:
A = 9 in. (225 mm) maximum gap dimension
B = 14 ft (4.3 m) ceiling height
X = 0.64 in. (16 mm) of gap/ft of ceiling height
Therefore, ≤0.75 in. (19 mm) of gap/ft of ceiling height spacing used.

9.2.7.2 When sprinklers are omitted from above a cloud ceiling in accordance with 9.2.7.1, the requirements of this section shall apply.

9.2.7.2.1 All sprinklers shall be quick response standard spray or extended coverage pendent or upright sprinklers.

9.2.7.2.2 Maximum cloud ceiling height shall not exceed 20 ft (6.1 m).

9.2.7.2.3 Maximum spacing and area of protection shall not exceed the maximum requirements of Table 10.2.4.2.1(a) for light hazard and Table 10.2.4.2.1(b) for ordinary hazard.

N **9.2.7.2.3.1** Where extended coverage sprinklers are used, the maximum distance between sprinklers shall not exceed 16 ft (4.9 m).

9.2.7.2.4 Cloud ceilings shall be of smooth ceiling construction.

9.2.7.2.5* For irregular shaped ceiling clouds (not rectangular) the minimum width dimension shall be the smallest width dimension of the cloud and for the gap shall be the greatest dimension between clouds or adjacent walls as applicable.

The phrase *irregular shaped* refers to the shape and dimensioning in the *x* and *y* directions, not the *z* direction. Slope clouds or wave clouds were not contemplated in the testing; therefore, they are not considered in the application of 9.2.7.2.5.

EDUFIRE.IR

A.9.2.7.2.5 The research testing and modeling used to determine the base data used for Table 9.2.7.1 is based on rectangular and equally spaced cloud configurations. Nonrectangular shapes are allowed to be considered with this section; however, the minimum width of the cloud and maximum width of the gap should be used to determine the worst geometric shape creating a conservative approach. Figure A.9.2.7.2.5 provides an example of an irregular cloud.

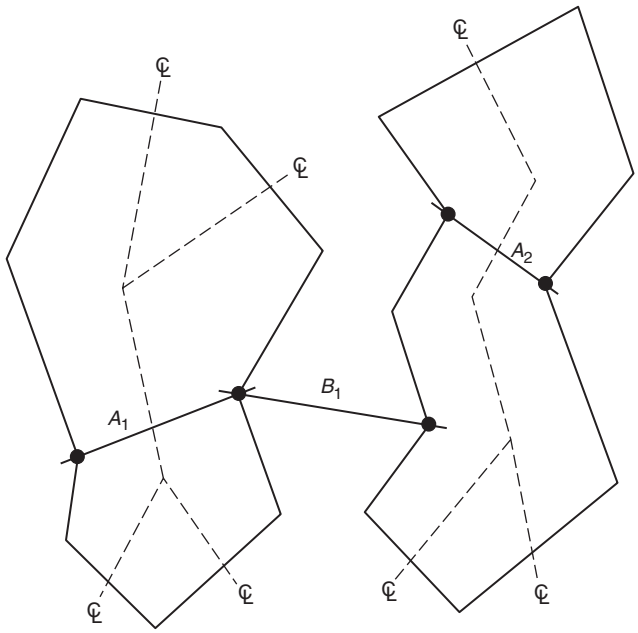

FIGURE A.9.2.7.2.5 *Irregular Shaped Cloud Dimensioning.*

CLOSER LOOK [9.2.7]

Understanding Cloud Ceiling Sprinkler Design

To take advantage of this subsection on cloud ceilings, the designer must identify the following pieces of information:

1. Cloud ceiling height
2. Cloud ceiling panel dimensions
3. Maximum width between clouds or between a cloud and a wall
4. Maximum coverage based on opening and sprinkler type

The following example provides a step-by-step approach to using 9.2.7 to omit sprinklers above a cloud ceiling.

Step 1: As noted in the FPRF report "Sprinkler Protection for Cloud Ceilings," to omit sprinklers above the cloud ceiling, the functional limitation is a maximum 1 in. (25 mm) gap between clouds (or a cloud and a wall) per vertical foot of height from the floor to the cloud, up to a maximum of 20 ft (6.1 m). Therefore, the maximum gap between clouds (or clouds and walls) would be 12 in. (300 mm) for a cloud ceiling 12 ft (3.7 m) above the floor. The height of the cloud ceiling above the floor is what dictates the maximum allowable gap between the clouds. Therefore, the first step is to calculate the cloud ceiling height as shown in Exhibit A. In this case, the cloud ceiling height is 10 ft (3.0 m); therefore, the maximum allowable gap between clouds is 10 in. (250 mm).

Step 2: Once the ceiling height has been identified, the desired cloud ceiling dimension should be determined. This information is critical since the minimum dimension of the panel will drive the maximum allowable coverage area per sprinkler, as

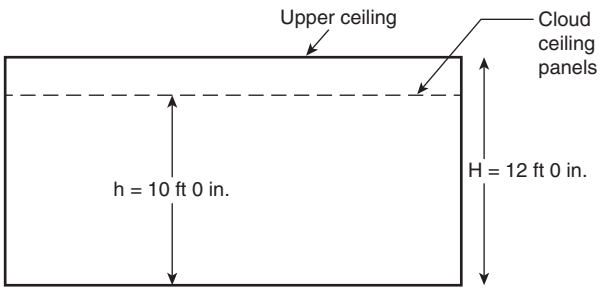

EXHIBIT A *Measuring Cloud Ceiling Height (Section View).*

EDUFIRE.IR

CLOSER LOOK [9.2.7] (*Continued*)

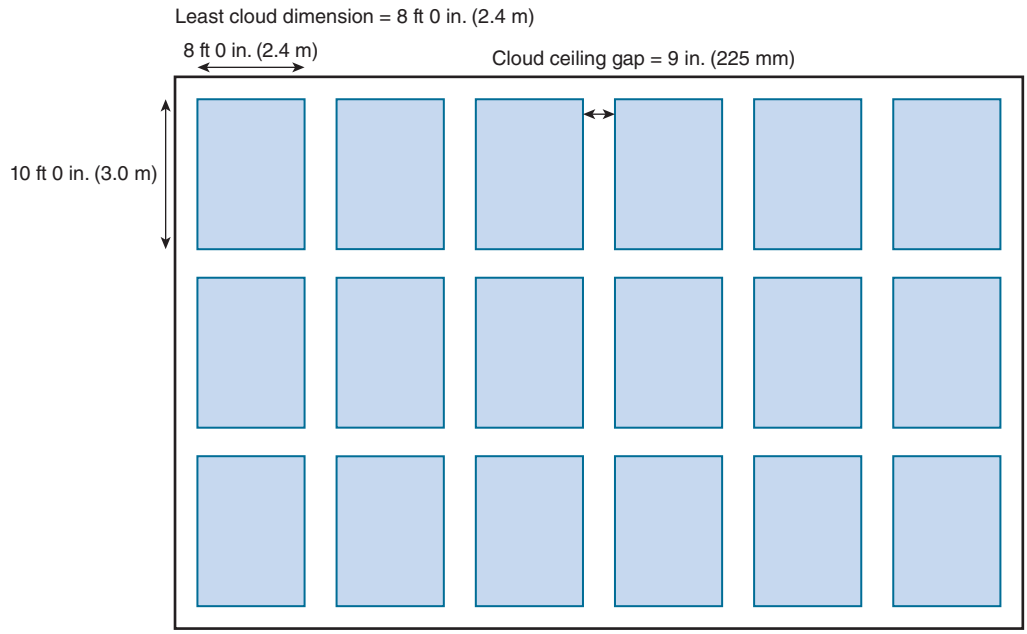

EXHIBIT B *Identifying Least Cloud Dimension and Cloud Gap Dimension (Plan View).*

shown in Table 9.2.7.1. In this case, the architect has specified cloud panels measuring 8 ft 0 in. (2.4 m) by 10 ft 0 in. (3.0 m). Therefore, the least dimension of 8 ft 0 in. (2.4 m), as shown in Exhibit B, dictates that row 3 of Table 9.2.7.1 should be used, because the minimum dimension exceeds 4 ft 0 in. (1.2 m).

Step 3: The third step is to identify the desired "gap width" between the panels. Some architects will want to know the maximum allowable width so they can create the largest openings possible. As noted in Step 1, the maximum allowable gap in this example would be 10 in. (250 mm). Exhibit B shows that the plans call for a 9 in. (225 mm) gap between the clouds and between the clouds and a wall. Since that gap is less than the value calculated in Step 1, it would be acceptable.

Step 4: Once the gap width is confirmed, the desired gap width is divided by the cloud ceiling height as noted in A.9.2.7.1(1). The following simple calculation is used to determine which column of Table 9.2.7.1 must be used to determine the maximum sprinkler spacing:

$$\frac{A}{B} = X$$

where:

A = gap between clouds or between a cloud and a wall [inches (mm)]

B = cloud ceiling height [feet and inches (m)]

X = maximum gap [inches (mm)]

9 in./10 ft 0 in. = 0.9 in./ft of ceiling height

225 mm/3 m = 75 mm/m of ceiling height

Since the value calculated is between 0.75 in./ft and 1.0 in./ft of ceiling height, the last column in the table is used to determine the maximum coverage area.

Step 5: The designer then uses Table 9.2.7.1 and the information gathered in Steps 2 and 4 to determine the maximum sprinkler spacing. In this case, the maximum allowable spacing would be at the intersection of the last row and column, shown in Exhibit C, which yields maximum coverage area of 150 ft^2 (14 m^2).

Step 6: Finally, the designer must locate the sprinklers in accordance with the maximum coverage area determined in Step 5 and in accordance with the other design requirements of NFPA 13 and the manufacturers' literature. The designer should consider the need to hit "center of the cloud" as opposed to installing the fewest number

Opening width = 0.9 in./ft of ceiling height per Step 4

Ceiling Cloud — Minimum Width Dimension (ft)	Maximum Area (ft^2) — Opening Width ≤0.5 in./ft of Ceiling Height	Maximum Area (ft^2) — Opening Width ≤0.75 in./ft of Ceiling Height	Maximum Area (ft^2) — Opening Width ≤1 in./ft of Ceiling Height
2–<2.5	175	70	NP
2.5–4	225	120	70
>4	225	150	150

Max cloud ceiling dimension >4 ft 0 in. per Step 2

Maximum sprinkler spacing = 150 ft^2 (14 m^2)

EXHIBIT C *Finding the Correct Maximum Spacing Area Using Table 9.2.7.1 from NFPA 13.*

EDUFIRE.IR

CLOSER LOOK [9.2.7] (*Continued*)

of sprinklers possible. It is common for design specifications to call out the need for the sprinkler designer to install "center of tile," but since the cloud ceiling concept is relatively new, a requirement for "center of cloud" is often not included in the specifications. Exhibit D shows a sprinkler layout compliant with 9.2.7 for this example, based on a "center of cloud" requirement from the client.

Conclusion: In many cases, the design team might want to have larger gaps between clouds than would be allowed by 9.2.7. If this is the situation, the sprinkler designer should give the design team options based on 9.2.7. In some instances, the architect might be set on a specific gap width that exceeds the allowances of 9.2.7, requiring sprinklers both above and below. Given the option to omit sprinklers above the clouds — and realize a cost savings — the design team might agree to an alternative gap between clouds. The sprinkler system designer should explain these allowances and limitations to the owner, the architect, the general contractor, or the developer should they want to take advantage of 9.2.7 and incorporate the requirements into the ceiling system design.

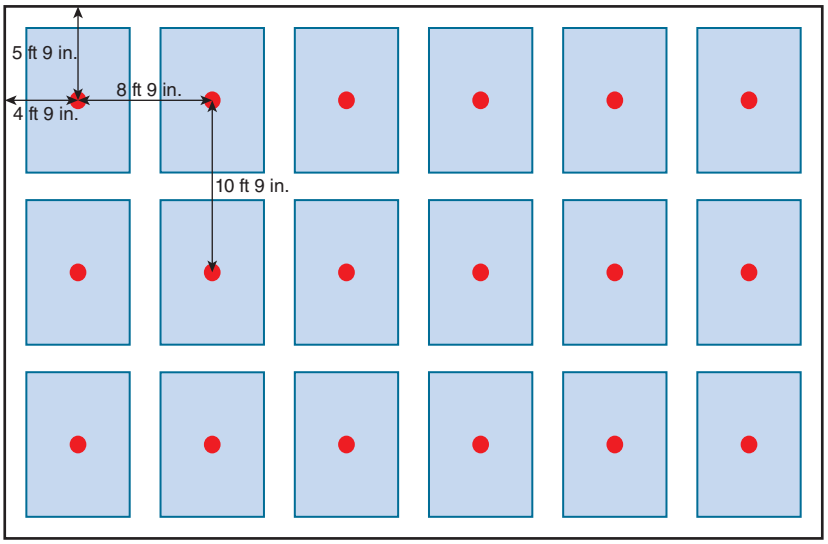

Note: No sprinklers required above the cloud ceiling panels.

EXHIBIT D *Compliant Cloud Sprinkler Spacing*

9.2.8 Revolving Doors Enclosures. Sprinkler protection shall not be required within revolving door enclosures.

N **9.2.9** Sprinklers shall not be required to be installed in furniture such as portable wardrobe units, cabinets, trophy cases, and similar items not intended for occupancy. This type of feature shall be permitted to be attached to the finished structure.

N **9.2.10* Equipment Enclosures.** Sprinklers shall not be required to be installed within electrical equipment, mechanical equipment, or air handling units not intended for occupancy.

It is not the intent of 9.2.10 to require sprinklers to be installed in air handling units (AHUs) or in similar mechanical or electrical equipment. AHUs for large buildings and building complexes can be so large that it brings into question whether sprinklers should be installed inside them. Providing sprinkler protection in such units is not practical and would not be overly effective based on the limited hazard present.

N **A.9.2.10** Equipment having access for routine maintenance should not be considered as intended for occupancy.

AHUs that have access panels or "man doors" are not necessarily intended for occupancy and should not be treated as such when applying 9.2.10. Often the presence of an access hatch or other means to allow for equipment maintenance is misconstrued as allowing occupancy of such a space.

EDUFIRE.IR

N **9.2.11 Noncombustible Vertical Shafts.** Sprinklers shall not be required at the top of noncombustible or limited-combustible, nonaccessible vertical duct, electric, and mechanical shafts as permitted by 9.3.3.1.1 and 9.3.3.1.2.

N **9.2.12 Noncombustible Stairways.**

N **9.2.12.1** Sprinklers shall not be required at the bottom of stairwells complying with the provisions of 9.3.4.2.3.1.

N **9.2.12.2** Sprinklers shall not be required for exterior stair towers complying with the provisions of 9.3.4.2.4.

N **9.2.13 Elevator Hoistways and Machine Rooms.** Sprinklers shall not be required in locations complying with 9.3.6.4, 9.3.6.5, or 9.3.6.6.

N **9.2.14 Duct Protection.** Sprinklers shall not be required in vertical duct risers complying with 9.3.9.1.2.

N **9.2.15 Open-Grid Ceilings.** Sprinklers shall not be required below open grid ceiling installations complying with 9.3.10.

N **9.2.16 Drop-Out Ceilings.** Sprinklers shall not be required below drop-out ceilings complying with 9.3.11.

N **9.2.17 Skylights.** Sprinklers shall not be required in skylights complying with 9.3.16.

N **9.2.17.1** Skylights that allow venting, other than smoke and heat venting per 12.1.1, shall be provided with sprinkler protection installed in the skylight.

9.3 Special Situations.

The requirements for special situations have been consolidated into Section 9.3 to consolidate the provisions that were previously spread throughout Chapter 8 of the 2016 edition. The situations addressed in this section do not fit the more usual building configurations such as "rooms" or "compartments." Instead they are often referred to as "spaces," and provisions are provided to clarify where the required sprinklers need to be located within those spaces.

9.3.1 Heat-Producing Devices with Composite Wood Joist Construction. Where heat-producing devices such as furnaces or process equipment are located in the joist channels above a ceiling attached directly to the underside of composite wood joist construction that would not otherwise require sprinkler protection of the spaces, the joist channel containing the heat-producing devices shall be sprinklered by installing sprinklers in each joist channel, on each side, adjacent to the heat-producing device.

9.3.2 Unless the requirements of 9.2.1.18 are met, sprinklers used in horizontal combustible concealed spaces (with a slope not exceeding 2 in 12) with combustible wood truss, wood joist construction, or bar joist construction having a combustible upper surface and where the depth of the space is less than 36 in. (900 mm) from deck to deck, from deck to ceiling, or with double wood joist construction with a maximum of 36 in. (900 mm) between the top of the bottom joist and the bottom of the upper joist shall be listed for such use.

9.3.2.1 Sprinklers specifically listed to provide protection of combustible concealed spaces described in 9.3.2 shall be permitted to be used in accordance with 9.4.1.2 where the space is less than 12 in. (300 mm) from deck to deck or deck to ceiling.

9.3.2.2 Sprinklers specifically listed to provide protection of combustible concealed spaces described in 9.3.2 shall be permitted to be used in accordance with 9.4.1.2 throughout the area when a portion of the area exceeds a depth of 36 in. (900 mm).

EDUFIRE.IR

9.3.2.3 Sprinklers specifically listed to provide protection of combustible concealed spaces described in 9.3.2 shall be permitted to be used in accordance with 9.4.1.2 to protect composite wood joist construction.

9.3.3 Vertical Shafts.

9.3.3.1 General. Unless the requirements of 9.3.3.1.1 or 9.3.3.1.2 are met, one sprinkler shall be installed at the top of shafts.

9.3.3.1.1 Noncombustible or limited-combustible, nonaccessible vertical duct shafts shall not require sprinkler protection.

9.3.3.1.2 Noncombustible or limited-combustible, nonaccessible vertical electrical or mechanical shafts shall not require sprinkler protection.

Sprinklers are to be provided at the top of all shafts used for stairs or other shafts open to more than one floor. Concealed combustible shafts must be sprinklered. Concealed shafts of noncombustible or limited-combustible construction and contents in a suitably rated enclosure do not require sprinklers. For requirements on elevator shafts, see 9.3.6.

9.3.3.2* Shafts with Combustible Surfaces.

A.9.3.3.2 Where practicable, sprinklers should be staggered at the alternate floor levels, particularly where only one sprinkler is installed at each floor level.

9.3.3.2.1 Where vertical shafts have combustible surfaces, one sprinkler shall be installed at each alternate floor level.

9.3.3.2.2 Where a shaft having combustible surfaces is trapped, an additional sprinkler shall be installed at the top of each trapped section.

The additional sprinklers for shafts with combustible surfaces must be placed to effectively wet the combustible surfaces. Where the shaft changes direction to form a trapped section, sprinklers are required at the top of each trapped section.

9.3.3.3 Accessible Shafts with Noncombustible Surfaces. Where accessible vertical shafts have noncombustible surfaces, one sprinkler shall be installed near the bottom.

Where shafts are accessible, trash and other material can potentially collect at the bottom of the shaft. In such cases, 9.3.3.3 requires a sprinkler at the bottom of the shaft, even if the shaft is of noncombustible construction.

9.3.4 Stairways.

9.3.4.1 Combustible Construction. Sprinklers shall be installed beneath all stairways of combustible construction.

9.3.4.1.1 Sprinklers shall be installed at the top of combustible stair shafts.

9.3.4.1.2* Sprinklers shall be installed under the landings at each floor level.

A.9.3.4.1.2 Sprinklers at each floor level landing should be positioned to protect both the floor level landing and any intermediate landing.

9.3.4.1.3 Sprinklers shall be installed beneath the lowest intermediate landing.

The requirement in 9.3.4.1 for sprinklers to be installed under "all stairways" needs some clarification. In stairs with both floor landings and intermediate floor landings, it has been interpreted that the sprinklers need to be installed under both, but that is not the committee's intent. As clarified in A.9.3.4.1.2, it is intended that sprinklers be installed under the floor level landings, positioned so that they can also protect the intermediate levels. Per 9.3.4.1.3, the lowest intermediate level landing is the only intermediate level that is required to be sprinklered, to protect against possible storage in space below.

EDUFIRE.IR

FAQ [9.3.4.2.1]

Why are sprinklers required in noncombustible stair shafts at the top of the shaft and under the first landing above the bottom of the shaft?

The storage of materials in stairwells obstructs the egress route and is prohibited by NFPA *101*. However, if there is an open space under the first landing or a large landing at the top of the stairs it is often an irresistible location for transient storage. As a result, 9.3.4.2.1 requires sprinklers at these locations.

9.3.4.2 Noncombustible Construction.

9.3.4.2.1 In noncombustible stair shafts having noncombustible stairs with noncombustible or limited-combustible finishes, sprinklers shall be installed at the top of the shaft and under the first accessible landing above the bottom of the shaft.

9.3.4.2.2 Where noncombustible stair shafts are divided by walls or doors, sprinklers shall be provided on each side of the separation.

9.3.4.2.3 Sprinklers shall be installed beneath landings or stairways where the area beneath is used for storage.

9.3.4.2.3.1 Sprinklers shall be permitted to be omitted from the bottom of the stairwell when the space under the stairs at the bottom is blocked off so that storage cannot occur.

The concept of eliminating the sprinkler at the bottom of the stairs has always been implied by NFPA 13, but the statement was never made explicitly in the text. Where the egress path is the only available space in the stairwell, sprinklers should not be necessary. Paragraph 9.3.4.2.3.1 makes it clear that when the area beneath the bottom landing is blocked off, sprinklers are not required in the bottom of the stairwell.

9.3.4.2.4 Sprinklers shall be permitted to be omitted from exterior stair towers when the exterior walls of the stair tower are at least 50 percent open and when the stair tower is entirely of noncombustible construction.

Exhibit 9.10 shows a set of exterior stairs complying with 9.3.4.2.4. Exterior stairs are normally accessible for manual fire fighting. If the stairs are more than 50 percent open and of noncombustible construction, a sprinkler can be eliminated from these stairs.

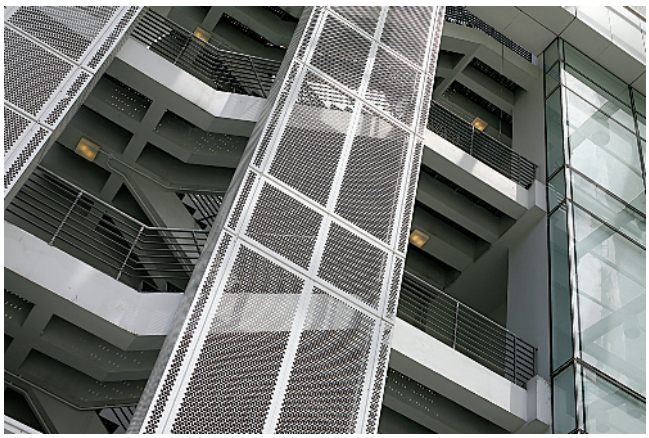

EXHIBIT 9.10 *Exterior Stairs. (© iStockphoto.com/blackred)*

9.3.4.3* Stairs Serving Two or More Areas. When stairs have openings to each side of a fire wall(s), sprinklers shall be installed in the stair shaft at each floor landing with multiple openings.

Sprinklers are required at each floor landing where a noncombustible stair shaft serves two fire-separated buildings or two fire sections of one building, as shown in Figure A.9.3.4.3(a), or where the stair landing serves as a horizontal exit. If the stair serves only one fire section, sprinklers are required only at the roof and under the lowest landing. [See Figure A.9.3.4.3(a) and Figure A.9.3.4.3(b).]

A.9.3.4.3 See Figure A.9.3.4.3(a) and Figure A.9.3.4.3(b). Sprinklers would be required in the case shown in Figure A.9.3.4.3(a) but not in the case shown in Figure A.9.3.4.3(b).

9.3.5* Vertical Openings.

A.9.3.5 Where sprinklers in the normal ceiling pattern are closer than 6 ft (1.8 m) from the water curtain, it might be preferable to locate the water curtain sprinklers in recessed baffle pockets. *(See Figure A.9.3.5.)*

EDUFIRE.IR

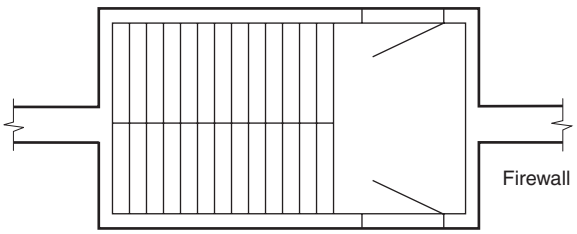

FIGURE A.9.3.4.3(a) *Noncombustible Stair Shaft Serving Two Sides of Fire Wall.*

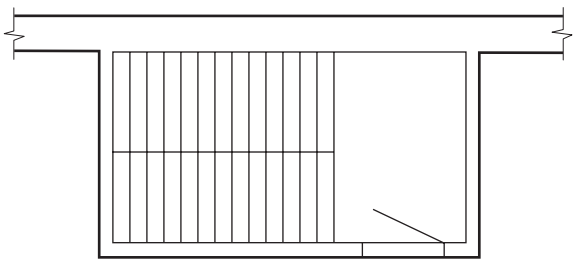

FIGURE A.9.3.4.3(b) *Noncombustible Stair Shaft Serving One Side of Fire Wall.*

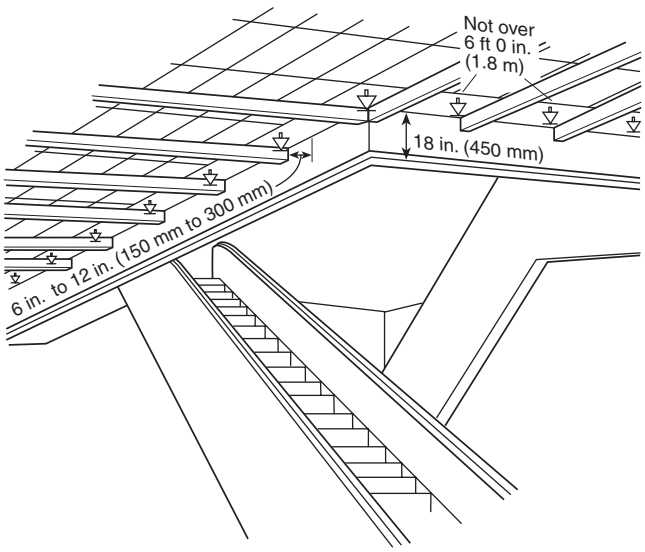

FIGURE A.9.3.5 *Sprinklers Around Escalators.*

9.3.5.1* General. Unless the requirements of 9.3.5.4 are met, where moving stairways, staircases, or similar floor openings are unenclosed and where sprinkler protection is serving as the alternative to enclosure of the vertical opening, the floor openings involved shall be protected by closely spaced sprinklers in combination with draft stops in accordance with 9.3.5.2 and 9.3.5.3.

A.9.3.5.1 It is the intent of this section to require closely spaced sprinklers and draft stops to openings where protection or enclosure is required by building and life safety codes.

Closely spaced sprinklers and draft stops are required around a vertical opening only if the local building code or NFPA *101* would otherwise require that it be protected by a barrier. As a general rule, vertical openings in buildings are required to be separated from the rest of the building by rated barriers in order to protect against the vertical spread of the products of combustion. However, not all vertical openings require such protection. Large open spaces, such as atriums, as described in 9.3.5.1, are intended to be uncompartmented and, for aesthetic purposes, not separated from the rest of the building. The sheer volume of these types of spaces creates a level of safety from the accumulation of the products of combustion. Because of this characteristic, there is no additional benefit to installing draft stops and closely spaced sprinklers in these spaces.

Smaller vertical openings might be referred to in the local building code or NFPA *101* as "communicating spaces" or "convenience openings." Such spaces are not required to have a barrier around the opening perimeter. (See NFPA *101*, Section 8.6, Vertical Openings, for more details.) An example of a communicating space is shown in Exhibit 9.11. Because this space is permitted to be unenclosed by *NFPA 5000®*, *Building Construction and Safety Code®*, or NFPA *101*, 9.3.5.1 does not require draft stops and closely spaced sprinklers.

EDUFIRE.IR

EXHIBIT 9.11 Communicating Space Not Requiring Draft Stops and Closely Spaced Sprinklers.

EXHIBIT 9.12 Example of Closely Spaced Sprinklers.

Escalator openings in department stores (see Exhibit 9.12) are examples of vertical openings that would not be considered a convenience opening or a communicating space. As a result, they would be required by *NFPA 5000* or NFPA *101* to be enclosed to protect against vertical fire spread. However, enclosed escalators would not be very convenient for the occupants of the department store, so an alternative to the enclosure is necessary. That alternative — the use of draft stops and closely spaced sprinklers — is established in 9.3.5.2 and 9.3.5.3.

9.3.5.2 Draft Stops. Draft stops shall meet all of the following criteria:

(1) The draft stops shall be located immediately adjacent to the opening.
(2) The draft stops shall be at least 18 in. (450 mm) deep.
(3) The draft stops shall be of noncombustible or limited-combustible material that will stay in place before and during sprinkler operation.

9.3.5.3 Sprinklers.

9.3.5.3.1 Sprinklers shall be spaced not more than 6 ft (1.8 m) apart and placed 6 in. to 12 in. (150 mm to 300 mm) from the draft stop on the side away from the opening.

9.3.5.3.2 Where sprinklers are closer than 6 ft (1.8 m), cross baffles shall be provided in accordance with 10.2.5.4.2.

Where the features of the opening warrant sprinklers that are spaced at intervals of less than 6 ft (1.8 m), as described in 9.3.5.3.2, the installation of baffles between adjacent sprinklers prevents the occurrence of the cold solder effect. The use of such devices is discussed in the commentary following 10.2.5.4.2 for standard spray sprinklers.

Sprinklers used to achieve the protection outlined in 9.3.5 can be of the open type or the automatic type. Privately conducted tests using closed sprinklers have indicated their effectiveness. The use of deluge-type water curtains has become quite rare since the early 1960s. Accidental discharge of deluge-type water curtains results in considerable water damage, as well as potential injury to persons on escalators.

9.3.5.4 Large Openings. Closely spaced sprinklers and draft stops are not required around large openings such as those found in shopping malls, atrium buildings, and similar structures where all adjoining levels and spaces are protected by automatic sprinklers in accordance with

EDUFIRE.IR

this standard and where the openings have all horizontal dimensions between opposite edges of 20 ft (6.1 m) or greater and an area of 1000 ft^2 (93 m^2) or greater.

9.3.6 Elevator Hoistways and Machine Rooms.

Elevator hoistways and machine rooms are covered in 9.3.6. Codes that cover elevator design, such as ASME A17.1/CSA B44, *Safety Code for Elevators and Escalators,* do not permit water discharge in elevator shafts until electrical power to the elevator cab has been shut down. This situation necessitates some special arrangement, such as a preaction system, to make sure that water does not flow into the elevator shaft until power shutdown has occurred. The additional cost of a special installation and the benefits returned for the protection must be weighed against the small number of fires in elevator shafts.

9.3.6.1* Sidewall spray sprinklers shall be installed at the bottom of each elevator hoistway not more than 2 ft (600 mm) above the floor of the pit.

Refuse and residual hydraulic fluids tend to collect at the bottom of shafts. A properly located sprinkler, as required by 9.3.6.1, can control a fire of such material. Conventional requirements regarding the placement of the deflector and clear space below the sprinkler cannot always be adhered to in this area. These issues are not critical, however, because the sprinkler would be physically close to any point where a fire could originate, still allowing the sprinkler to control the fire.

Several papers were presented by participants, including the American Society of Mechanical Engineers (ASME), at a symposium in February 1991, in Baltimore, MD (*Proceedings of the Symposium on Elevators and Fires*). Subjects covered at this symposium ranged from general elevator safety to potential problems associated with premature discharge of water onto elevator control elements. Following this symposium, representatives from the building code organizations and ASME worked to resolve the problem of providing proper fire protection without sacrificing any of the inherent safety features of the sprinkler system or the elevator and its associated equipment. The result of this cooperation was the development of 9.3.6 to specifically address the installation of sprinklers in elevator shafts and equipment rooms.

This area is constantly changing, and some changes have been proposed to ASME A17.1 that might result in modification of elevator requirements in the future. Also, in some jurisdictions there is a movement to eliminate the sprinklers and automatic shutdown, so that the fire service can continue to use the elevator as long as possible when fighting fires in a high-rise building. Any modifications to these rules that would permit the omission of sprinklers by local officials need to be carefully considered due to the possibility of uncontrolled fire growth within elevator machine rooms combined with simultaneous fire department dependence on the elevators. Additional concerns surround the fire department's assumption when responding to a fire incident within an elevator machine room that such spaces within the building are fully sprinklered.

FAQ [9.3.6.1]

Where sprinklers are installed at the bottom of the elevator shaft, is water discharge required to be delayed until power shutdown has occurred?

Because the sprinkler at the bottom of the shaft cannot discharge onto the elevator or other operating components of the elevator, ASME A17.1 no longer requires that the sprinkler discharge at the bottom of the shaft be delayed until power shutdown has occurred. The sprinkler at the bottom of the shaft, where installed, is permitted to be part of the normal building sprinkler system and is not required to be part of the special system used to protect the rest of the elevator equipment.

N **A.9.3.6.1** The sprinklers in the pit are intended to protect against fires caused by debris, which can accumulate over time. Ideally, the sprinklers should be located near the side of the pit below the elevator doors, where most debris accumulates. However, care should be taken that the sprinkler location does not interfere with the elevator toe guard, which extends below the face of the door opening.

9.3.6.2 The sprinkler required at the bottom of the elevator hoistway by 9.3.6.1 shall not be required for enclosed, noncombustible elevator shafts that do not contain combustible hydraulic fluids.

9.3.6.3 Automatic fire sprinklers shall not be required in elevator machine rooms, elevator machinery spaces, control spaces, or hoistways of traction elevators installed in accordance with the applicable provisions in NFPA *101,* or the applicable building code, where all of the following conditions are met:

(1) The elevator machine room, machinery space, control room, control space, or hoistway of traction elevator is dedicated to elevator equipment only.
(2) The elevator machine room, machine room, machinery space, control room, control space, or hoistway of traction elevators are protected by smoke detectors, or other automatic fire detection, installed in accordance with *NFPA 72*.

EDUFIRE.IR

(3) The elevator machinery space, control room, control space, or hoistway of traction elevators is separated from the remainder of the building by walls and floor/ceiling or roof/ceiling assemblies having a fire resistance rating of not less than that specified by the applicable building code.
(4) No materials unrelated to elevator equipment are permitted to be stored in elevator machine rooms, machinery spaces, control rooms, control spaces, or hoistways of traction elevators.
(5) The elevator machinery is not of the hydraulic type.

9.3.6.4* Automatic sprinklers in elevator machine rooms or at the tops of hoistways shall be of ordinary- or intermediate-temperature rating.

A.9.3.6.4 ASME A17.1, *Safety Code for Elevators and Escalators*, requires the shutdown of power to the elevator upon or prior to the application of water in elevator machine rooms or hoistways. This shutdown can be accomplished by a detection system with sufficient sensitivity that operates prior to the activation of the sprinklers *(see also NFPA 72)*. As an alternative, the system can be arranged using devices or sprinklers capable of effecting power shutdown immediately upon sprinkler activation, such as a waterflow switch without a time delay. This alternative arrangement is intended to interrupt power before significant sprinkler discharge.

9.3.6.5* Upright, pendent, or sidewall spray sprinklers shall be installed at the top of elevator hoistways.

Historically, upright or pendent sprinklers were required at the top of an elevator shaft. In many instances, however, upright or pendent sprinklers cannot be centered above the hoistway because of the presence of cables and other equipment. Sidewall sprinklers, which can be installed clear of elevating equipment and which might be easier to install and replace, are now permitted as an alternative.

A.9.3.6.5 Passenger elevator cars that have been constructed in accordance with ASME A17.1, *Safety Code for Elevators and Escalators,* Rule 204.2a (under A17.1a-1985 and later editions of the code) have limited combustibility. Materials exposed to the interior of the car and the hoistway, in their end-use composition, are limited to a flame spread index of 0 to 75 and a smoke-developed index of 0 to 450, when tested in accordance with ASTM E84, *Standard Test Method of Surface Burning Characteristics of Building Materials*.

9.3.6.6 The sprinkler required at the top of the elevator hoistway by 9.3.6.5 shall not be required where the hoistway for passenger elevators is noncombustible or limited-combustible and the car enclosure materials meet the requirements of ASME A17.1, *Safety Code for Elevators and Escalators*.

9.3.6.7 Combustible Suspension in Elevators.

9.3.6.7.1 Sprinklers shall be installed at the top and bottom of elevator hoistways where elevators utilize combustible suspension means such as noncircular elastomeric-coated or polyurethane-coated steel belts.

9.3.6.7.2 The sprinklers in the elevator hoistway shall not be required when the suspension means provide not less than an FT-1 rating when tested to the vertical burn test requirements of UL 62, *Flexible Cords and Cables,* and UL 1581, *Reference Standard for Electrical Wires, Cables, and Flexible Cords.*

9.3.7* Library Stack Areas and Record Storage. Where books or records are stored in fixed open book shelves, sprinklers shall be installed in accordance with one of the following:

(1) Sprinklers shall be permitted to be installed without regard to aisles where clearance between sprinkler deflectors and tops of stacks is 18 in. (450 mm) or more.

EDUFIRE.IR

(2) Where the 18 in. (450 mm) clearance between sprinkler deflectors and tops of stacks cannot be maintained, sprinklers shall be installed in every aisle and at every tier of stacks with distance between sprinklers along aisles not to exceed 12 ft (3.7 m) in accordance with Figure 9.3.7(a).

(3) Where the 18 in. (450 mm) clearance between sprinkler deflectors and tops of stacks cannot be maintained and where vertical shelf dividers are incomplete and allow water distribution to adjacent aisles, sprinklers shall be permitted to be omitted in alternate aisles on each tier, and where ventilation openings are also provided in tier floors, sprinklers shall be staggered vertically in accordance with Figure 9.3.7(b).

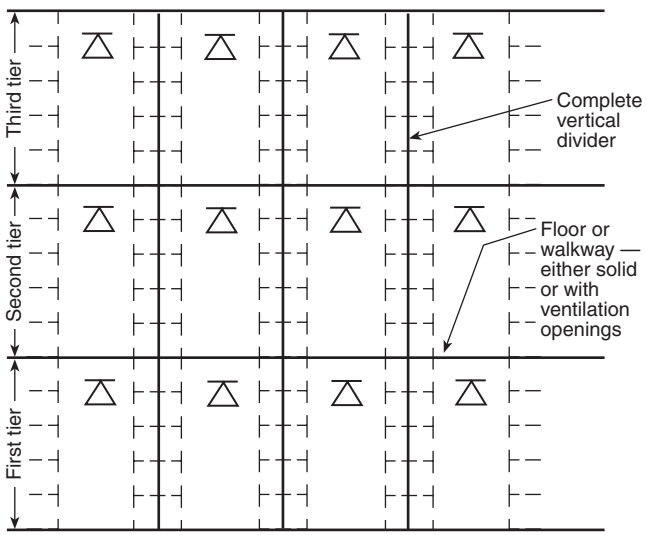

FIGURE 9.3.7(a) *Sprinklers in Multitier Bookstacks with Complete Vertical Dividers.*

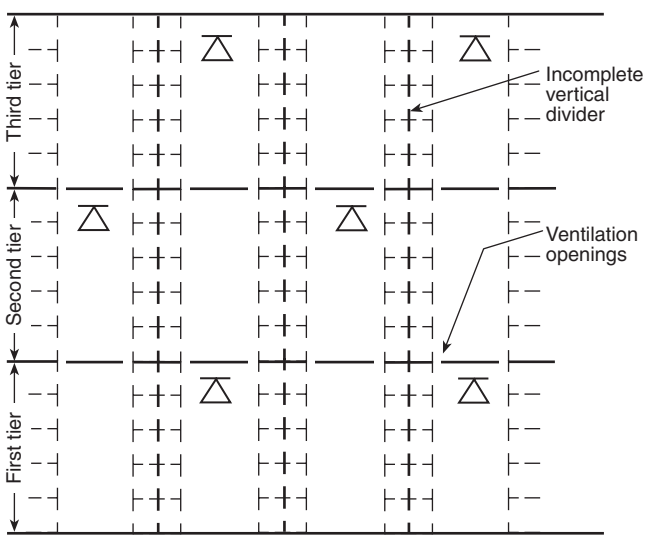

FIGURE 9.3.7(b) *Sprinklers in Multitier Bookstacks with Incomplete Vertical Dividers.*

EDUFIRE.IR

Library stack rooms and medical record storage are generally thought of as high-density book/record storage on shelves and, in some ways, can be thought of as a type of rack storage. To overcome the obstruction caused by the bookshelves, sprinklers are installed at every tier and aisle unless adequate clearance can be maintained.

Item (3) of 9.3.7 departs somewhat from the typical sprinkler clearance requirements, because 9.3.7 assumes that the 18 in. (450 mm) clear space below the sprinkler deflector will not be maintained. To compensate for this closer sprinkler placement, sprinklers are required in each aisle unless the 18 in. (450 mm) clear space is available.

A.9.3.7 Library stacks are high-density book storage areas and should not be confused with the typical library bookshelves and aisles in the general browsing areas. Examples of record storage include medical or paper records.

9.3.8* Industrial Ovens and Furnaces.

A.9.3.8 The combustible materials present inside industrial ovens and furnaces can be protected by automatic sprinklers. Wet sprinkler systems are preferred. However, water-filled piping exposed to heat within an oven or furnace can incur deposition and buildup of minerals within the pipe. If the oven or furnace could be exposed to freezing temperatures, dry pendent sprinklers are an alternative to wet pipe systems. Another option is to use a dry pipe system.

The preferred arrangement for piping is outside of the oven; the sprinkler should be installed in the pendent position. The sprinkler temperature rating should be at least 50°F (10°C) greater than the high-temperature limit setting of the oven or applicable zone. As a minimum, the sprinkler system inside the oven or furnace should be designed to provide 15 psi (1 bar) with all sprinklers operating inside the oven/furnace. Sprinkler spacing on each branch line should not exceed 12 ft (3.7 m).

9.3.9 Duct Protection. Duct protection shall be required to meet the requirements of 9.3.8 where required by the authority having jurisdiction or the applicable referenced code or standard.

9.3.9.1 Sprinkler Location.

9.3.9.1.1 Unless the requirements of 9.3.9.1.2 or 9.3.9.1.3 are met, ducts shall have one sprinkler located at the top of each vertical riser and at the midpoint of each offset.

9.3.9.1.2 Sprinklers shall not be required in a vertical riser located outside of a building, provided the riser does not expose combustible material or provided the interior of the building and the horizontal distance between the hood outlet and the vertical riser is at least 25 ft (7.6 m).

9.3.9.1.3 Horizontal exhaust ducts shall have sprinklers located on 10 ft (3.0 m) centers beginning no more than 5 ft (1.5 m) from the duct entrance.

9.3.9.2 Protection Against Freezing. Sprinklers in exhaust ducts subject to freezing shall be properly protected against freezing. *(See 16.4.1.)*

9.3.9.3 Sprinkler Access. Access shall be provided to all sprinklers for inspection, testing, and maintenance.

9.3.9.4 Strainers. A listed line strainer shall be installed in the main water supply preceding sprinklers having nominal K-factors smaller than K-2.8 (40).

9.3.10* Open-Grid Ceilings. Open-grid ceilings shall only be installed beneath sprinklers where one of the following is met:

(1) Open-grid ceilings in which the openings are ¼ in. (6 mm) or larger in the least dimension, where the thickness or depth of the material does not exceed the least dimension of the opening, and where such openings constitute 70 percent of the area of the ceiling material. The spacing of the sprinklers over the open-grid ceiling shall then comply with the following:
   (a) In light hazard occupancies where sprinkler spacing (either spray or old-style sprinklers) is less than 10 ft × 10 ft (3 m × 3 m), a minimum clearance of at least 18 in. (450 mm)

EDUFIRE.IR

shall be provided between the sprinkler deflectors and the upper surface of the open-grid ceiling. Where spacing is greater than 10 ft × 10 ft (3 m × 3 m) but less than 10 ft × 12 ft (3 m × 3.7 m), a clearance of at least 24 in. (600 mm) shall be provided from spray sprinklers and at least 36 in. (900 mm) from old-style sprinklers. Where spacing is greater than 10 ft × 12 ft (3 m × 3.7 m), a clearance of at least 48 in. (1.2 m) shall be provided.

(b) In ordinary hazard occupancies, open-grid ceilings shall be permitted to be installed beneath spray sprinklers only. Where sprinkler spacing is less than 10 ft × 10 ft (3 m × 3 m), a minimum clearance of at least 24 in. (600 mm) shall be provided between the sprinkler deflectors and the upper surface of the open-grid ceiling. Where spacing is greater than 10 ft × 10 ft (3 m × 3 m), a clearance of at least 36 in. (900 m) shall be provided.

(2) Other types of open-grid ceilings shall be permitted to be installed beneath sprinklers where they are listed for such service and are installed in accordance with instructions contained in each package of ceiling material.

The requirements in 9.3.10 for clearance between the sprinkler deflectors and the top of the grid ceiling ensure that sprinkler discharge is not too severely impaired. The grid ceiling can obstruct the discharge pattern to some degree. In addition to the height above the grid ceiling, other obstructions, such as pipes or ducts, must also be considered.

A.9.3.10 The installation of open-grid egg crate, louver, or honeycomb ceilings beneath sprinklers restricts the sideways travel of the sprinkler discharge and can change the character of discharge.

9.3.11 Drop-Out Ceilings and Ceiling Materials.

9.3.11.1* Drop-out ceilings and ceiling materials shall be permitted to be installed beneath sprinklers where the ceiling panels or ceiling materials are listed for that service and are installed in accordance with their listings.

A.9.3.11.1 There are ceiling panels and ceiling materials that have been investigated as a ceiling material in accordance with UL Subject 723S, *Outline of Investigation for Drop-Out Ceilings Installed Beneath Automatic Sprinklers*, or as FM Class Number 4651, *Plastic Suspended Ceiling Panels*. Such ceiling panels and ceiling materials are designed such that the activation of the sprinkler and the ability of the sprinkler discharge to reach the hazard being protected are not adversely impacted.

9.3.11.2 Drop-out ceilings and ceiling materials meeting the criteria in 9.3.11.1 shall not be installed below quick-response or extended coverage sprinklers unless specifically listed for that application.

Drop-out ceilings are designed to shrink and fall when heated by a fire, permitting the activation of the sprinklers located above. Only ceiling panels that are listed and tested for use in drop-out ceilings are acceptable. The use of opaque ceilings, which make it difficult to determine if the tile has been painted or if material is stored above the ceiling, should be discouraged.

FAQ [9.3.11.2]

Why are quick-response and extended coverage sprinklers prohibited above drop-out ceilings unless the ceiling is specifically listed for use with them?

Quick-response and some extended coverage sprinklers installed above drop-out ceiling panels can operate before all the ceiling panels drop out. Because both types of sprinklers have fast-acting heat-responsive elements, they should not be used above ceiling panels unless the panels have been specifically investigated for use with sprinklers containing fast-response elements.

9.3.11.3 Drop-out ceilings and ceiling materials meeting the criteria in 9.3.11.1 shall not be considered ceilings within the context of this standard.

Because drop-out ceilings fall in the early stages of a fire, the ceiling does not need to be considered with respect to the positioning of sprinklers. The permanent ceiling/deck above the drop-out ceiling should be used as the point of reference for deflector placement.

9.3.11.4* Piping installed above drop-out ceilings and ceiling materials meeting the criteria in 9.3.11.1 shall not be considered concealed piping.

A.9.3.11.4 Drop-out ceilings do not provide the required protection for soft-soldered copper joints or other piping that requires protection.

9.3.11.5* Sprinklers shall not be installed beneath drop-out ceilings or ceiling materials meeting the criteria in 9.3.11.1.

EDUFIRE.IR

Sprinklers are not permitted to be installed beneath drop-out ceilings because the danger exists for the falling drop-out ceiling tiles to catch on a sprinkler located below the ceiling and interfere with that sprinkler's proper operation or distribution pattern.

A.9.3.11.5 The ceiling tiles might drop before sprinkler operation. Delayed operation might occur because heat must then bank down from the deck above before sprinklers will operate.

9.3.12* Old-style sprinklers shall be installed in fur storage vaults.

Subsection 9.3.12 identifies the only conditions under which NFPA 13 still requires the use of old-style sprinklers.

A.9.3.12 For tests of sprinkler performance in fur vaults, see "Fact Finding Report on Automatic Sprinkler Protection for Fur Storage Vaults" of Underwriters Laboratories Inc., dated November 25, 1947.

Sprinklers should be listed old-style with orifice sizes selected to provide a flow rate as close as possible to, but not less than, 20 gpm (75 L/min) per sprinkler, for four sprinklers, based on the water pressure available.

Sprinklers in fur storage vaults should be located centrally over the aisles between racks and should be spaced not over 5 ft (1.5 m) apart along the aisles.

Where sprinklers are spaced 5 ft (1.5 m) apart along the sprinkler branch lines, pipe sizes should be in accordance with the following schedule:

1 in. (25 mm) — 4 sprinklers
1¼ in. (32 mm) — 6 sprinklers
1½ in. (40 mm) — 10 sprinklers
2 in. (50 mm) — 20 sprinklers
2½ in. (65 mm) — 40 sprinklers
3 in. (80 mm) — 80 sprinklers

Full-scale testing conducted in 1947 on fur storage vaults found that the optimum system design required the operation of four old-style sprinklers. The test results appear in the UL report "Fact Finding Report on Automatic Sprinkler Protection for Fur Storage Vaults." Because no further testing was conducted for this storage configuration, the Technical Committee on Sprinkler System Installation Criteria has no basis for modifying this requirement. The pipe schedule identified in A.9.3.12 applies to piping running in the same direction as the aisles.

9.3.13 Stages.

9.3.13.1 Sprinklers shall be installed under the roof at the ceiling, in spaces under the stage either containing combustible materials or constructed of combustible materials, and in all adjacent spaces and dressing rooms, storerooms, and workshops.

9.3.13.2 Where proscenium opening protection is required, a deluge system shall be provided with open sprinklers located not more than 3 ft (900 mm) away from the stage side of the proscenium arch and spaced up to a maximum of 6 ft (1.8 m) on center. *(See Chapter 11 for design criteria.)*

9.3.14 Spaces Above Ceilings.

9.3.14.1 Where spaces have ceilings that are lower than the rest of the area, the space above this lower ceiling shall be sprinklered unless it complies with the rules of 9.2.1 for allowable unsprinklered concealed spaces.

9.3.14.2 Where the space above a drop ceiling is sprinklered, the sprinkler system shall conform to the rules of 19.2.2 and Section 20.10.

9.3.14.3* Where there is a noncombustible space above a noncombustible or limited-combustible drop ceiling that is sprinklered because it is open to an adjacent sprinklered space and where there is no possibility for storage above the drop ceiling, the sprinkler system shall be

EDUFIRE.IR

permitted to extend only as far into the space as 0.6 times the square root of the design area of the sprinkler system in the adjacent space.

A basic premise of NFPA 13 is that sprinkler protection is provided throughout a building. When sprinklers are provided in a space (e.g., a warehouse or a manufacturing facility) and an office or other area with a mezzanine above occupies a portion of the space, the ceiling above the space must be sprinklered. The sprinkler above the space should be of the same design as the remaining ceiling sprinklers in the storage area.

There are two exceptions in which sprinklers above a space are not required. The first is a case in which the wall around the space with the lower ceiling extends all the way to the roof and creates a concealed space that does not require sprinklers (see 9.2.1). The second exception is where storage or occupancy above the ceiling is not possible. In that case, the sprinklers only need to extend partway into the space so that the heat flow into the space is controlled by the sprinklers along the open sides.

A.9.3.14.3 See Figure A.9.3.14.3.

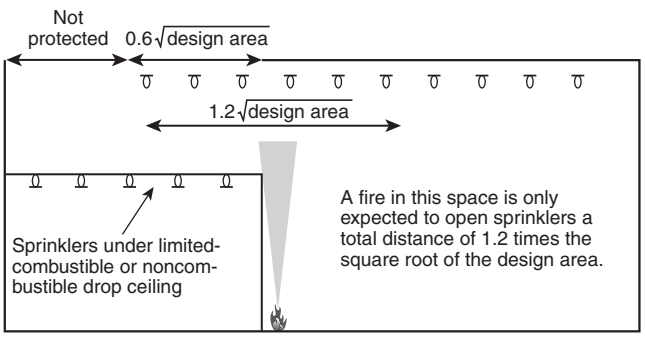

FIGURE A.9.3.14.3 *Extension of Sprinkler System Above Drop Ceiling.*

9.3.14.3.1 The sprinkler system shall extend at least 24 ft (7.3 m) into the space above the ceiling.

9.3.15* Sprinkler-Protected Glazing. Where sprinklers are used in combination with glazing as an alternative to a required fire-rated wall or window assembly, the sprinkler-protected assembly shall comply with the following:

(1) Sprinklers shall be listed as specific application window sprinklers unless the standard spray sprinklers are specifically permitted by the building code.
(2) Sprinklers shall be supplied by a wet pipe system.
(3) Glazing shall be heat-strengthened, tempered, or glass ceramic and shall be fixed.
(4) Where the assembly is required to be protected from both sides, sprinklers shall be installed on both sides of the glazing.
(5) The use of sprinkler-protected glazing shall be limited to non-load-bearing walls.
(6) The glazed assembly shall not have any horizontal members that would interfere with uniform distribution of water over the surface of the glazing, and there shall be no obstructions between sprinklers and glazing that would obstruct water distribution.
(7) The water supply duration for the design area that includes the window sprinklers shall not be less than the required rating of the assembly

Subsection 9.3.15 is intended to address glazing systems using a closed sprinkler system and not open nozzle systems that have been traditionally used to protect glazing assemblies.

A.9.3.15 It is not the intent of this section to apply to sprinkler protection of glass atrium enclosures, pedestrian walkways, which are permitted by NFPA *101*, or model building codes to be protected by standard spray sprinklers installed in accordance with the special provisions set forth in those codes for atrium construction. In some cases, sprinkler protected assemblies

EDUFIRE.IR

as an alternative to a required fire-rated wall or window assembly could require the approval of the building official.

The requirement to provide listed specific application window sprinklers is a change from the 2013 edition of NFPA 13, in which standard spray quick-response sprinklers were permitted. This change was seen as necessary based on unrated glazing tests, which showed standard spray sprinklers do not wet the entire surface area of the glass.

9.3.16 Skylights.

9.3.16.1 Sprinklers shall be permitted to be omitted from skylights not exceeding 32 ft^2 (3.0 m^2) in area, regardless of hazard classification, that are separated by at least 10 ft (3.0 m) horizontally from any other unprotected skylight or unprotected ceiling pocket.

9.3.16.1.1 When a sprinkler is installed directly beneath a skylight not exceeding 32 ft^2 (3.0 m^2), the distance to the ceiling shall be measured to the plane of the ceiling as if the skylight was not present.

9.3.16.2 Skylights not exceeding 32 ft^2 (3.0 m^2) shall be permitted to have a plastic cover.

FAQ [9.3.16.2]

Do all skylights require sprinklers to be installed within the skylight?

No, certain small or single skylights do not require sprinklers within them.

Prior to the 2002 edition of NFPA 13, the standard was silent on the omission of sprinklers from skylights and similar pockets; however, Formal Interpretations 78-4 and 80-4 balloted by the committee many years previously had indicated that sprinkler protection was not required for 4 ft × 8 ft (1.2 m × 2.4 m) skylights without a permitted or acceptable depth of the skylight being established. The concern had been that, unless a sprinkler was placed in deep skylights or similar ceiling pockets, heat would collect in the skylights and delay the operation of sprinklers.

Paragraph 9.3.16.1 permits the omission of sprinklers from skylights that do not exceed 32 ft^2 (3.0 m^2) in area and are separated from any adjacent unprotected ceiling pocket or skylight. A single small skylight should not have a significant impact on performance, and the requirement for a 10 ft (3.0 m) separation between unprotected ceiling pockets and skylights ensures that there will be a sprinkler between skylights. That sprinkler prevents heat from collecting in multiple adjacent skylights or pockets where sprinkler activation could be delayed (see Exhibit 9.13). The elimination of the sprinkler from under skylights includes skylights that have a plastic cover, since the amount of plastic within small skylights does not add significantly to the fuel load.

EXHIBIT 9.13 Separation Between Unprotected Skylights.

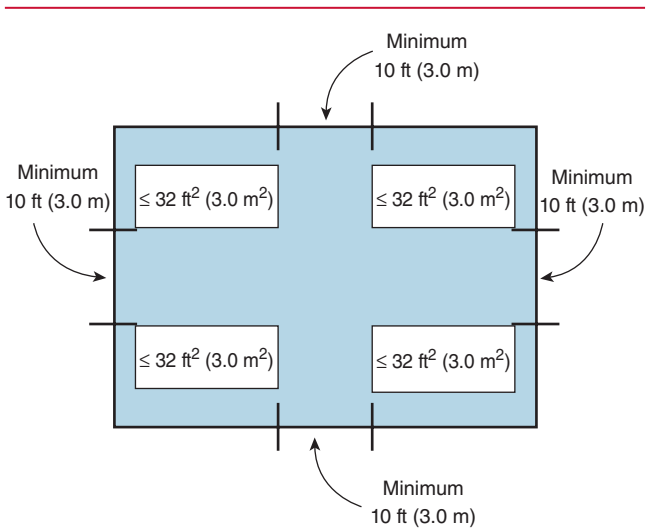

EDUFIRE.IR

9.3.17 Concealed Spaces.

9.3.17.1 Concealed Spaces Requiring Sprinkler Protection. Concealed spaces of exposed combustible construction shall be protected by sprinklers except in concealed spaces where sprinklers are not required to be installed by 9.2.1.1 through 9.2.1.19 and 9.2.2.

9.3.17.1.1* Concealed Space Design Requirements. Sprinklers in concealed spaces having no access for storage or other use shall be installed in accordance with the requirements for light hazard occupancy.

A.9.3.17.1.1 Utilities and other building services can be located within the concealed spaces.

9.3.17.1.2 Localized Protection of Exposed Combustible Construction or Exposed Combustibles. When otherwise noncombustible or limited-combustible concealed spaces that would not require sprinkler protection have localized exposed combustible construction, or contain localized areas of exposed combustibles, the combustibles shall be permitted to be protected as follows:

(1) If the exposed combustibles are in the vertical partitions or walls around all or a portion of the enclosure, a single row of sprinklers spaced not over 12 ft (3.7 m) apart nor more than 6 ft (1.8 m) from the inside of the partition shall be permitted to protect the surface. The first and last sprinklers in such a row shall not be over 5 ft (1.5 m) from the ends of the partitions.
(2) If the exposed combustibles are in the horizontal plane, the area of the combustibles shall be permitted to be protected with sprinklers on a light hazard spacing. Additional sprinklers shall be installed no more than 6 ft (1.8 m) outside the outline of the area and not more than 12 ft (3.7 m) on center along the outline. When the outline returns to a wall or other obstruction, the last sprinkler shall not be more than 6 ft (1.8 m) from the wall or obstruction.

9.3.18 Spaces Under Ground Floors, Exterior Docks, and Platforms.

9.3.18.1 Unless the requirements of 9.2.2 are met, sprinklers shall be installed in spaces under all combustible ground floors and combustible exterior docks and platforms.

9.3.19 Exterior Projections.

9.3.19.1* Unless the requirements of 9.2.3.2, 9.2.3.3, or 9.2.3.4 are met, sprinklers shall be installed under exterior projections exceeding 4 ft (1.2 m) in width.

N **A.9.3.19.1** Sprinkler protection under exterior projections should not be required to spray beyond the support beam on the exterior edge of the exterior projection as long as the maximum distance from the interior edge of support beam to the exterior edge of the projection does not exceed 4 ft (1.2 m). An additional line of sprinklers on the exterior edge is not required due to obstruction rules. This is considered a reasonable level of protection because sprinklers are located between the structure and the exterior edge. See Figure A.9.3.19.1.

9.3.19.2* Sprinklers shall be installed under all exterior projections greater than 4 ft (1.2 m) where combustibles are stored.

A.9.3.19.2 Short-term transient storage, such as that for delivered packages, and the presence of planters, newspaper machines, and so forth, should not be considered for storage or handling of combustibles. The presence of combustible furniture on balconies for occupant use should not require sprinkler protection.

9.3.20 Electrical Equipment.

Sprinkler protection in electrical equipment rooms is required by 9.1.1(1) and 9.3.20.1. Water shields of noncombustible material can be used to prevent direct contact between the electrical equipment and the discharging water.

EDUFIRE.IR

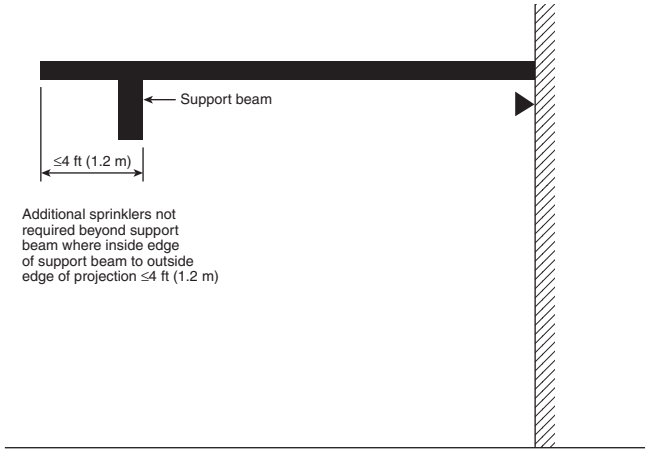

FIGURE A.9.3.19.1 *Exterior Projection with Sprinklers.*

Although sprinkler systems have been successfully installed in rooms containing electrical equipment for 100 years with no documented instances of a problem, NFPA 13 identifies certain conditions that, if followed, permit sprinklers to be omitted from electrical equipment rooms (see 9.2.6). Although those conditions are relatively easy to determine, building owners need to police the areas. The building owner must control access to all such electrical equipment rooms to reduce the likelihood that storage of any type is present in those spaces.

N **9.3.20.1*** Unless the requirements of 9.2.6 are met, sprinkler protection shall be required in electrical equipment rooms.

N **A.9.3.20.1** Sprinkler protection under exterior projections should not be required to spray beyond the support beam on the exterior edge of the exterior projection. An additional line of sprinklers on the exterior edge is not required due to obstruction rules. This is considered a reasonable level of protection since sprinklers are located between the structure and the exterior edge.

9.4 Use of Sprinklers.

Numerous types of sprinklers are currently available, and sprinkler technology continues to evolve, especially with regard to thermal sensitivity, spray pattern distribution characteristics, and droplet size. As a result, new types and styles of sprinklers with specific applications and installation requirements continue to be developed.

Whereas the requirements in Chapters 10 through 15 are organized by sprinkler types to better address their use and installation requirements, Section 9.4 provides criteria applicable to all types of sprinklers, including standard spray upright and pendent, sidewall standard spray, extended coverage upright and pendent spray, extended coverage sidewall spray, residential, control mode specific application (CMSA), early suppression fast-response (ESFR), and in-rack sprinklers.

9.4.1 General.

9.4.1.1* Sprinklers shall be installed in accordance with their listing.

Any limitations placed on a sprinkler, such as hazard classification, location in which it can be used, restrictions on its position with respect to structural elements, or limitations placed on its temperature rating, are included as part of its listing. The requirement in 9.4.1.1 precludes the use of sprinklers for other than their intended use, unless that use has been tested and evaluated in accordance with 9.1.1(5) or (6). For example, some architects have insisted on the installation of sprinklers within a structure to achieve symmetry. These sprinklers are not connected to a water supply and are merely being used as a decorative feature — clearly not an intended use.

EDUFIRE.IR

Some specially listed sprinklers, such as certain storage sprinklers, attic sprinklers, window sprinklers, on-off sprinklers, and institutional sprinklers, have unique use and installation requirements. These and other special sprinklers must be installed in accordance with not only NFPA 13 but also any additional requirements specified by their listing. Chapter 13 addresses CMSA sprinklers, and Chapter 15 addresses special sprinklers.

DESIGNER'S CORNER [9.4]

How do I decide which sprinkler to select for any given application?

Selecting the right sprinkler for a specific situation is not a simple task. With 13 different orifice sizes, 6 different temperature classifications, 3 different sprinkler orientations, 10 different deflector designs, and 2 different response characteristics, there is a potential for 4,680 different types of sprinklers on the market. Every different possible combination is not going to be manufactured, but there are still hundreds if not thousands of sprinklers to pick from, which can be a daunting task. Making the task more difficult is the fact that a single sprinkler can be listed to be used in many different ways. For example, a single pendent K-8.0 extended coverage sprinkler could have 13 different listings for use at different spacings to protect light, ordinary hazard Group 1 or ordinary hazard Group 2 occupancies, each at different flow and pressure combinations.

The process of picking the right sprinkler for any application involves looking at the significant attributes of the space being protected, determining the location of the sprinkler pipe, and taking into account the aesthetic concerns (if any) of the owner. The following points might be helpful in choosing which sprinkler to use:

- The use of extended coverage sprinklers can save on both material and labor costs but might require a water supply with a stronger pressure than spray sprinklers at standard spacing.
- Residential sprinklers are specifically designed to handle the fuel loads typical to residential occupancies. Residential sprinklers are required in most cases by NFPA 13D and NFPA 13R. NFPA 13 encourages their use in dwelling units with design incentives that reduce the water supply requirements by roughly 20 percent compared to quick-response standard spray and extended coverage sprinklers.
- CMSA and ESFR sprinklers are specifically designed for storage occupancies and might be more efficient at protecting certain storage arrangements, especially rack storage where in-rack sprinklers might otherwise be needed.
- ESFR sprinklers are aimed at fire suppression rather than fire control, which can minimize fire damage in certain situations.
- The higher the ceiling, the larger the sprinkler orifice should be. Sprinklers with larger orifices create larger water droplets, which have better vertical momentum and do better penetrating vertical fire plumes to get water to the base of burning materials. High ceiling spaces tend to allow strong vertical plumes to develop, and the water leaving a sprinkler has a long way to fall before it can get to the base of a fire.
- Many consumers find flush, recessed, and concealed sprinklers to be more pleasing to the eye than other types of sprinklers.

In many circumstances, the arrangement of the space will dictate what type of sprinkler is appropriate. For example, a parking garage such as the one shown below on the left needs to have upright sprinklers in order to get the deflectors near the ceiling while minimizing pipe. The exterior corridor shown below on the right is most efficiently protected with dry-horizontal sprinklers connected to wet piping in a heated space, based on the geometry and potential temperature profile of this space.

The designer must think critically for each project about all the variables that drive sprinkler selection. Not all projects are the same, so thinking that the same sprinkler will work each time is not appropriate.

Upright Sprinkler in Parking Garage.

Sidewall Sprinkler in Exterior Corridor.

EDUFIRE.IR

FAQ [9.4.1.4]

Why are sprinklers prohibited from being installed in fittings where solvent cement is utilized until the fittings have been cemented in place?

The solvent cement used to join some types of sprinkler piping, especially if used excessively, can drip onto the sprinkler and potentially block or plug the sprinkler orifice or otherwise prevent the sprinkler from operating properly. As stated in 9.4.1.4, to prevent dripping of excess solvent cement, the sprinkler should not be installed in the fitting until the fitting is connected to the pipe and any excess solvent cement is removed.

FAQ [9.4.1.5]

Are the protective caps and straps provided to protect sprinklers from overspray or damage during construction?

No. Caps and straps will not protect installed sprinklers from overspray and are not intended to protect sprinklers from physical damage that might occur from any direct impact.

A.9.4.1.1 Whenever possible, sprinklers should be installed in piping after the piping is placed in its final position and secured by hangers in accordance with this standard.

9.4.1.2 Where no sprinklers are specifically listed for construction features or other special situations that require unusual water distribution, the requirements of 9.4.1.1 shall not apply and listed sprinklers shall be permitted to be installed in positions other than anticipated by their listing to achieve specific results.

9.4.1.3* Upright sprinklers shall be installed with the frame arms parallel to the branch line, unless specifically listed for other orientation.

A.9.4.1.3 The purpose of this requirement is to minimize the obstruction of the discharge pattern.

The sprinkler's frame arm and the piping below the sprinkler both represent potential obstructions to the water distribution pattern and can prevent a uniform spray pattern. Even though the frame arm is designed to minimize such obstructions, the potential for obstruction cannot be completely eliminated. Installation of an upright sprinkler with its frame arm parallel to the branch line aligns the two obstructions and thereby minimizes the overall effect on the distribution pattern.

9.4.1.4 Where solvent cement is used as the pipe and fittings bonding agent, sprinklers shall not be installed in the fittings prior to the fittings being cemented in place.

9.4.1.5 Protective Caps and Straps.

9.4.1.5.1* Protective caps and straps shall be removed using means that are in accordance with the manufacturer's installation instructions.

Screwdrivers or similar tools should not be used to pry or pop the protective strap or cap from sprinklers to prevent damage to the glass bulb.

A.9.4.1.5.1 Protective caps and straps are intended to provide temporary protection for sprinklers during shipping and installation.

9.4.1.5.2* Protective caps and straps shall be removed from all sprinklers prior to the time when the sprinkler system is placed in service.

A.9.4.1.5.2 Protective caps and straps can be removed from upright sprinklers, from sprinklers that are fitted with sprinkler guards, and from sprinklers that are not likely to be subject to damage due to construction activities or other events. In general, protective caps and straps should not be removed until construction activities or other events have progressed to the point where the sprinklers will not be subjected to conditions that could cause them to be damaged. Consideration should be given to leaving the protective caps and straps in place where other construction work is expected to take place, adjacent to the sprinklers following their installation, until that activity is complete. Protective caps and straps on sidewall and pendent sprinklers, for example, should be left in place pending installation of the wall and ceiling systems and then removed as finish escutcheons are being installed. In retrofit applications, with minimal follow-on trade construction activity, and with upright sprinklers, it would be reasonable to remove the caps and straps immediately following the installation on the sprinkler piping.

9.4.1.5.3 Protective caps and straps on all upright sprinklers or on any sprinklers installed more than 10 ft (3.0 m) above the floor shall be permitted to be removed from sprinklers immediately following their installation.

To prevent damage to a sprinkler after installation while other work is being performed around the sprinklers, protective caps should remain on the sprinklers for as long as practical. However, caps and straps must be removed before the sprinkler system is placed in service. Exhibit 9.14 shows a sprinkler that has been provided with a protective cap that prevents the sprinkler operating element from being damaged during shipment and handling. Sprinkler caps or straps should not be considered adequate protection

EXHIBIT 9.14 Sprinkler with Protective Cap. (Courtesy of Wayne Automatic Fire Sprinklers, Inc.)

EDUFIRE.IR

from overspray of paint or other applied coatings during construction. Care should be taken to protect installed sprinklers from being sprayed or coated with any foreign material not applied by the manufacturer (see 7.2.5.2 and 16.2.3 in NFPA 13 and 5.2.1.1.1 in NFPA 25, *Standard for the Inspection, Testing, and Maintenance of Water-Based Fire Protection Systems*).

9.4.2 Temperature Ratings.

Temperature ratings of a sprinkler are used for the following purposes:

1. To keep sprinklers from operating accidentally if installed in a high ambient temperature area
2. To control the number of sprinklers operating in the design area

ASK THE AHJ

Are temperature ratings in 9.4.2 and thermal sensitivity in 9.4.3 the same issue?

No. Fire sprinklers are given a temperature rating that corresponds with the ambient temperatures the sprinkler will experience as installed. The thermal sensitivity rating is based on the reaction time of the fire sprinkler in fire conditions. The requirement for fast-response sprinklers in light hazard occupancies is used to ensure that future fire sprinkler systems will provide a higher level of life safety in areas that typically are occupied. The consideration of the appropriate temperature rating for sprinklers in a given space should be based on the anticipated ambient temperature using Table 7.2.4.1 as a guideline.

9.4.2.1* Unless the requirements of 9.4.2.2, 9.4.2.3, 9.4.2.4, or 9.4.2.5 are met, ordinary- and intermediate-temperature sprinklers shall be used throughout buildings.

A.9.4.2.1 It is acceptable to install ordinary-temperature sprinklers throughout a building, intermediate-temperature sprinklers throughout a building, or a mix of ordinary- and intermediate-temperature sprinklers throughout a building.

Traditionally, ordinary-temperature sprinklers have been required throughout a building unless the requirements of 9.4.2 called for intermediate- or high-temperature sprinklers to be used. However, many buildings are built without suspended ceilings, resulting in a mix of ordinary-temperature sprinklers and intermediate temperature–rated sprinklers needed around heating diffusers and other heat-producing areas. Since the response time of quick-response intermediate-temperature sprinklers is not that different from the response time of ordinary-temperature standard-response sprinklers, NFPA 13 now groups ordinary- and intermediate-temperature sprinklers together and allows intermediate-temperature sprinklers throughout the building, reducing the need for multiple types of sprinklers.

9.4.2.2 Where maximum ceiling temperatures exceed 100°F (38°C), sprinklers with temperature ratings in accordance with the maximum ceiling temperatures of Table 7.2.4.1 shall be used.

9.4.2.3 High-temperature sprinklers shall be permitted to be used throughout ordinary and extra hazard occupancies, storage occupancies, and as allowed in this standard and other NFPA codes and standards.

9.4.2.4 Sprinklers of intermediate- and high-temperature classifications shall be installed in specific locations as required by 9.4.2.5.

Sprinkler operation outside the fire area reduces the water discharge density available to the sprinklers directly adjacent to the fire, which reduces sprinkler effectiveness. In some high heat release fires with high thermal updrafts, the water discharged from sprinklers is carried back toward the ceiling as steam, where it condenses on ordinary-temperature sprinklers and causes them to operate. This phenomenon is one of the reasons for sprinklers operating beyond the fire area.

Extra high-temperature, very extra high-temperature, and ultra high-temperature sprinklers identified in Table 7.2.4.1 can be used in areas immediately above equipment that produces large amounts of heat and high temperatures, such as industrial and baking ovens, furnaces, and boilers.

FAQ [9.4.2]

Why should all sprinklers installed throughout a compartment be of the same temperature range?

If sprinklers with different temperature ratings are randomly installed throughout a compartment, sprinklers remote from the fire may operate prior to sprinklers in the immediate vicinity of the fire. This phenomenon is referred to as *skipping*, which can be detrimental to system performance. For that reason, sprinklers with the same temperature ratings should be used in a given area, unless otherwise specified by 9.4.2.

FAQ [9.4.2.1]

Besides temperature range selection, what other factor can affect skipping?

A sprinkler's thermal sensitivity is another factor to consider. Note the prohibition in 9.4.3.2 against mixing standard-response and quick-response sprinklers in the same compartment. As a general rule, quick-response sprinklers operate significantly faster than standard-response sprinklers under the same conditions. The user must be aware of the possibility of skipping if quick-response and standard-response sprinklers of the same temperature rating are mixed in a compartment.

FAQ [9.4.2.4]

Why are higher temperature sprinklers preferred or required in some locations?

Higher temperature classification sprinklers are preferable for some types of fast-developing fires. The use of ordinary-temperature classification sprinklers to protect against fast-developing high heat release rate fires tends to result in the operation of sprinklers beyond the fire area.

EDUFIRE.IR

9.4.2.5* The following practices shall be observed to provide sprinklers of other than ordinary-temperature classification unless other temperatures are determined or unless high-temperature sprinklers are used throughout, and temperature selection shall be in accordance with Table 9.4.2.5(a), Table 9.4.2.5(b), Table 9.4.2.5(c), and Figure 9.4.2.5:

(1)* Sprinklers in the high-temperature zone shall be of the high-temperature classification, and sprinklers in the intermediate-temperature zone shall be of the intermediate-temperature classification.

(2) Sprinklers located within 12 in. (300 mm) to one side or 30 in. (750 mm) above an uncovered steam main, heating coil, or radiator shall be of the intermediate-temperature classification.

(3) Sprinklers within 7 ft (2.1 m) of a low-pressure blowoff valve that discharges free in a large room shall be of the high-temperature classification.

(4) Sprinklers under glass or plastic skylights exposed to the direct rays of the sun shall be of the intermediate-temperature classification.

(5) Sprinklers in an unventilated, concealed space, under an uninsulated roof, or in an unventilated attic shall be of the intermediate-temperature classification.

(6) Sprinklers in unventilated show windows having high-powered electric lights near the ceiling shall be of the intermediate-temperature classification.

(7) Sprinklers protecting commercial-type cooking equipment and ventilation systems shall be of the high- or extra high–temperature classification as determined by use of a temperature-measuring device. *(See 8.9.6.)*

(8) Sprinklers protecting residential areas installed near specific heat sources identified in Table 9.4.2.5(c) shall be installed in accordance with Table 9.4.2.5(c).

(9) Ordinary-temperature sprinklers located adjacent to a heating duct that discharges air that is less than 100°F (38°C) are not required to be separated in accordance with Table 9.4.2.5(a) or Table 9.4.2.5(c).

(10) Sprinklers in walk-in type coolers and freezers with automatic defrosting shall be of the intermediate-temperature classification or higher.

(11) Sprinklers in closets containing ventless clothes dryers shall be of the intermediate-temperature classification or higher.

FAQ [9.4.2.5(8)]

Is any guidance available for temperature selection for residential sprinklers?

Item (8) of 9.4.2.5 provides technical guidance for the selection of the temperature rating of sprinklers protecting residential areas. The requirements of 9.4.2.5(8) and Table 9.4.2.5(c) provide guidance for all sprinklers used in residential areas, including residential sprinklers. The manufacturer's listing and data sheets should also be considered when selecting the appropriate sprinkler type or model.

FAQ [9.4.2.5(10)]

Why are intermediate-temperature or higher sprinklers required in freezers or coolers with automatic defrost?

While the temperature in a freezer or cooler is normally well below 40°F (4°C), the heat from automatic defrosting units can approach 165°F (74°C) and has caused premature activation of standard-response sprinklers. Using sprinklers of the intermediate-temperature range or higher is appropriate for such spaces with automatic defrosting units.

The requirements specified in 9.4.2.5 relate to the use of sprinklers covered in Table 7.2.4.1. The temperature rating criteria allow the sprinklers to operate in response to a fire rather than to high ambient temperatures.

Exhibit 9.15 shows two sprinklers installed in the vicinity of a unit heater. The sprinkler in front of the unit heater is required to be a high-temperature sprinkler because it is located within the 7 ft (2.1 m) high-temperature zone established in Table 9.4.2.5(a) and Figure 9.4.2.5. The sprinkler located behind the heating unit is outside the high-temperature zone, so it is permitted to be an ordinary-temperature sprinkler.

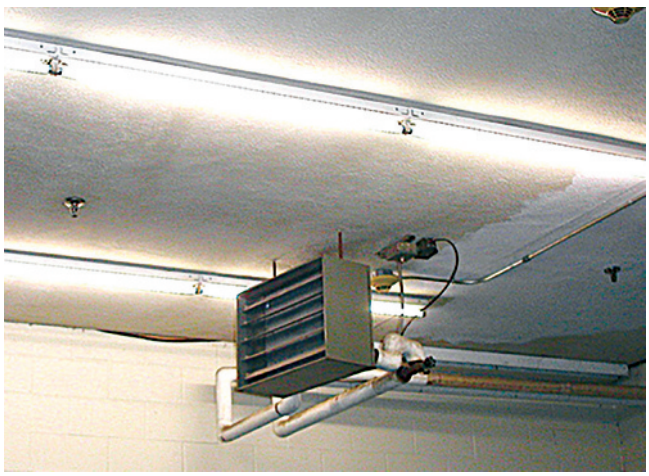

EXHIBIT 9.15 *Sprinklers Near Ceiling Unit Heater.*

EDUFIRE.IR

ASK THE AHJ

When measuring the distance from a sprinkler to a horizontal HVAC diffuser, would an inspector measure from the near edges of the sprinkler and diffuser or from the center of the sprinkler and diffuser?

Although NFPA 13 does not directly address this, other provisions of the standard imply that the distance should be measured from the center of the sprinkler to the edge of the diffuser. For example, see Figure 9.4.2.5, 9.5.3.1, and Figure 10.2.6.1.1.3(A).

The extent to which an attic is going to be ventilated is not always known at the time the sprinkler system is designed or installed, and the amount of ventilation necessary to maintain the attic space at or below the 100°F (38°C) threshold for ordinary temperature sprinklers is not identified in every geographic location. Therefore, unless the attic space is conditioned, it should be protected with intermediate-temperature sprinklers.

TABLE 9.4.2.5(a) *Temperature Ratings of Sprinklers Based on Distance from Heat Sources*

Type of Heat Condition	*Ordinary-Temperature Rating*	*Intermediate-Temperature Rating*	*High-Temperature Rating*
(1) Heating ducts			
(a) Above	More than 2 ft 6 in. (750 mm)	2 ft 6 in. or less (750 mm)	
(b) Side and below	More than 1 ft 0 in. (300 mm)	1 ft 0 in. or less (300 mm)	
(c) Diffuser	Any distance except as shown under Intermediate-Temperature Rating column	*Downward discharge:* Cylinder with 1 ft 0 in. (300 mm) radius from edge extending 1 ft 0 in. (300 mm) below and 2 ft 6 in. (750 mm) above *Horizontal discharge:* Semicylinder or cylinder with 2 ft 6 in. (750 mm) radius in direction of flow extending 1 ft 0 in. (300 mm) below and 2 ft 6 in. (750 mm) above	
(2) Unit heater and radiant heater			
(a) Horizontal discharge		*Discharge side:* 7 ft 0 in. (2.1 m) to 20 ft 0 in. (6.1 m) radius pie-shaped cylinder *(see Figure 9.4.2.5)* extending 7 ft 0 in. (2.1 m) above and 2 ft 0 in. (600 mm) below heater; also 7 ft 0 in. (2.1 m) radius cylinder more than 7 ft 0 in. (2.1 m) above unit heater	7 ft 0 in. (2.1 m) radius cylinder extending 7 ft 0 in. (2.1 m) above and 2 ft 0 in. (600 mm) below unit heater
(b) Vertical downward discharge *(for sprinklers below unit heater, see Figure 9.4.2.5)*		7 ft 0 in. (2.1 m) radius cylinder extending upward from an elevation 7 ft 0 in. (2.1 m) above unit heater	7 ft 0 in. (2.1 m) radius cylinder extending from the top of the unit heater to an elevation 7 ft 0 in. (2.1 m) above unit heater
(3) Steam mains (uncovered)			
(a) Above	More than 2 ft 6 in. (750 mm)	2 ft 6 in. or less (750 mm)	
(b) Side and below	More than 1 ft 0 in. (300 mm)	1 ft 0 in. or less (300 mm)	
(c) Blowoff valve	More than 7 ft 0 in. (2.1 m)		7 ft 0 in. or less (2.1 m)

EDUFIRE.IR

TABLE 9.4.2.5(b) *Temperature Ratings of Sprinklers in Specified Locations*

Location	*Ordinary-Temperature Rating*	*Intermediate-Temperature Rating*	*High-Temperature Rating*
Skylights		Glass or plastic	
Attics	Do not use	Ventilated or unventilated	
Peaked roof: metal or thin boards, concealed or not concealed, insulated or uninsulated	Ventilated	Unventilated	
Flat roof: metal, not concealed	Ventilated or unventilated	Note: For uninsulated roof, climate and insulated or uninsulated occupancy can necessitate intermediate sprinklers. Check on job.	
Flat roof: metal, concealed, insulated or uninsulated	Ventilated	Unventilated	
Show windows	Ventilated	Unventilated	

Note: A check of job condition by means of thermometers might be necessary.

TABLE 9.4.2.5(c) *Temperature Ratings of Sprinklers in Specified Residential Areas*

	Minimum Distance from Edge of Source to Ordinary-Temperature Sprinkler		*Minimum Distance from Edge of Source to Intermediate-Temperature Sprinkler*	
Heat Source	*in.*	*mm*	*in.*	*mm*
Side of open or recessed fireplace	36	900	12	300
Front of recessed fireplace	60	1500	36	900
Coal- or wood-burning stove	42	1050	12	300
Kitchen range	18	450	9	225
Wall oven	18	450	9	225
Hot air flues	18	450	9	225
Uninsulated heat ducts	18	450	9	225
Uninsulated hot water pipes	12	300	6	150
Side of ceiling- or wall-mounted hot air diffusers	24	600	12	300
Front of wall-mounted hot air diffusers	36	900	18	450
Hot water heater or furnace	6	150	3	75
Light fixture:				
0 W–250 W	6	150	3	75
250 W–499 W	12	300	6	150

A.9.4.2.5 A diffuser in ceiling sheathing labeled by the manufacturer as "horizontal discharge" has directional vanes to move air further along the ceiling, and sprinklers located within the 2 ft 6 in. (750 mm) radius should have an intermediate-temperature rating. See Figure A.9.4.2.5(a) through Figure A.9.4.2.5(d).

EDUFIRE.IR

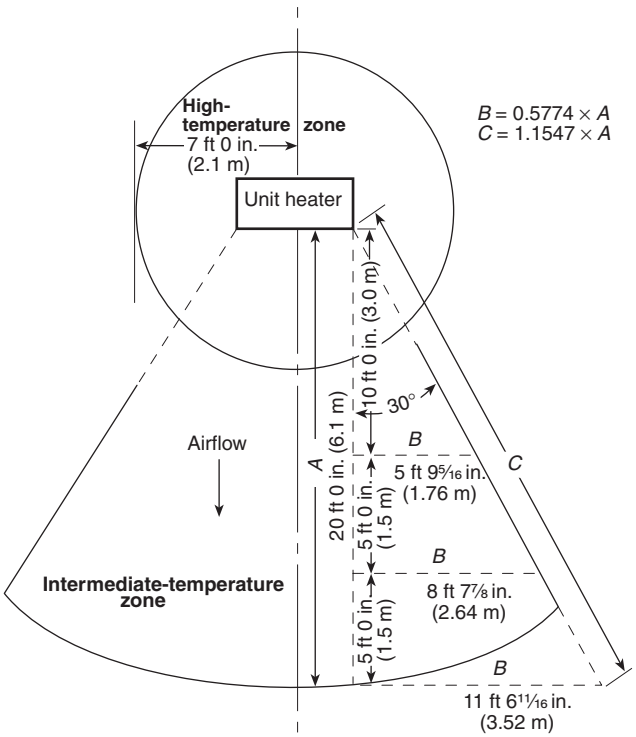

FIGURE 9.4.2.5 *High-Temperature and Intermediate-Temperature Zones at Unit Heaters and Radiant Heaters.*

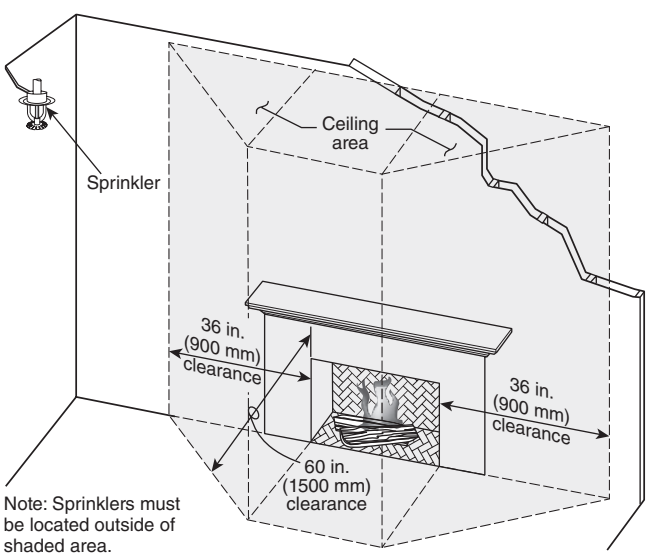

N ***FIGURE A.9.4.2.5(a)*** *Ordinary-Temperature Sprinkler over Recessed Fireplace.*

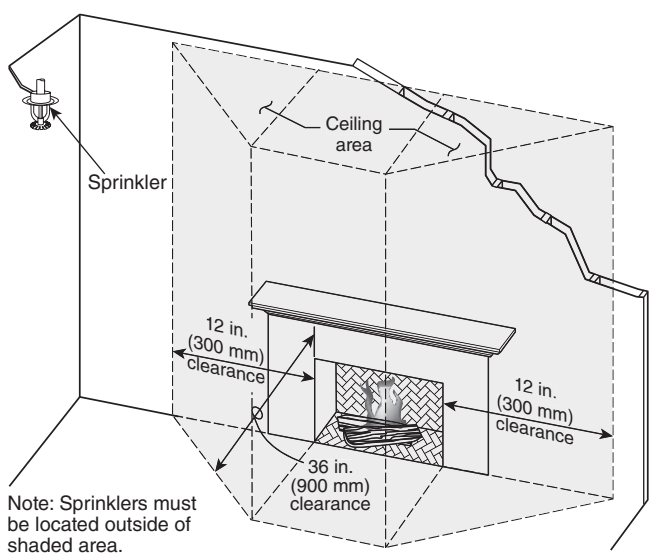

N ***FIGURE A.9.4.2.5(b)*** *Intermediate-Temperature Sprinkler over Recessed Fireplace.*

EDUFIRE.IR

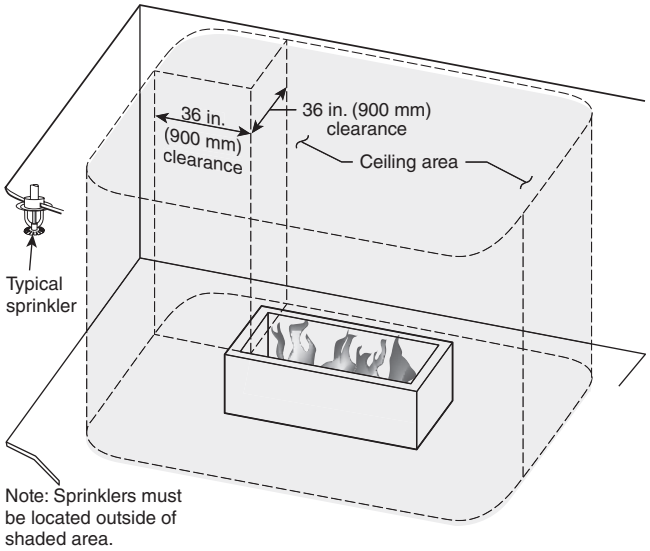

N *FIGURE A.9.4.2.5(c) Ordinary-Temperature Sprinkler over Open Fireplace.*

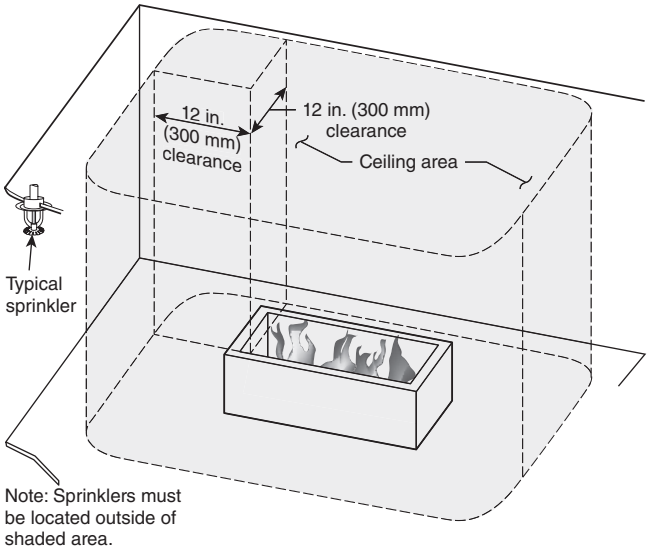

N *FIGURE A.9.4.2.5(d) Intermediate-Temperature Sprinkler over Open Fireplace.*

EXHIBIT 9.16 Typical Office Area Diffuser.

Typical HVAC ceiling tile diffusers that are intended to move air along the ceiling, such as the one pictured in Exhibit 9.16, should be treated as horizontal discharge according to A.9.4.2.5. If the HVAC system runs hot, ordinary temperature–rated sprinklers within 2 ft 6 in. (750 mm) of the diffuser are subject to nuisance activation. Ordinary temperature–rated sprinklers are listed for use for temperatures no more than 100°F (38°C). According to Table 9.4.2.5(a), sprinklers classified as intermediate temperature–rated or higher need to be used in such situations. Some air diffusers in ceilings can be set up to discharge in multiple directions, including horizontally along the ceiling.

A.9.4.2.5(1) Areas used for hot yoga facilities, steam rooms, saunas, indoor areas containing hot tubs, and similar heated areas should be evaluated to determine the potential maximum ambient temperature before selection of sprinkler temperature rating to be installed in the space.

9.4.2.6 In case of occupancy change involving temperature change, the sprinklers shall be changed accordingly.

9.4.2.7* The minimum temperature rating of ceiling sprinklers in general storage, rack storage, rubber tire storage, roll paper storage, and baled cotton storage applications shall be 150°F (66°C).

A.9.4.2.7 Where high temperature–rated sprinklers are installed at the ceiling, high temperature–rated sprinklers also should extend beyond storage in accordance with Table A.9.4.2.7.

FAQ [A.9.4.2.4.5(1)]

Are sprinklers required in hot areas such as saunas and steam rooms?

Yes. High temperature sprinklers have an operating element well above temperatures that can be tolerated by human beings occupying these rooms, so it stands to reason that the ambient temperature in such rooms will be within the requirements of Table 7.2.4.1.

TABLE A.9.4.2.7 Distance Beyond Perimeter of Storage for High Hazard Occupancies Protected with High Temperature–Rated Sprinklers

Design Area		Distance	
ft^2	m^2	ft	m
2000	185	30	9.1
3000	280	40	12
4000	370	45	14
5000	465	50	15
6000	555	55	17

EDUFIRE.IR

9.4.3 Thermal Sensitivity.

NFPA 13 addresses the concept of thermal sensitivity by classifying sprinklers as either fast response or standard response. Fast-response sprinklers include those sprinklers that have a thermal element with a response time index (RTI) of 90 $(ft\text{-}sec)^{1/2}$ [50 $(m\text{-}sec)^{1/2}$] or less. Standard-response sprinklers include those sprinklers that have a thermal element with an RTI of 145 $(ft\text{-}sec)^{1/2}$ [80 $(m\text{-}sec)^{1/2}$] or more.

The definitions of several sprinkler types located in Chapter 3, such as residential sprinkler, quick-response sprinkler, and early suppression fast-response sprinkler, clearly reflect the emphasis on a sprinkler's thermal sensitivity.

SEE ALSO

A.3.3.205.2 and its commentary for more information on thermal sensitivity.

9.4.3.1* Sprinklers in light hazard occupancies shall be one of the following:

(1) Quick-response type as defined in 3.3.205.4.16
(2) Residential sprinklers in accordance with the requirements of Chapter 12
(3) Quick response CMSA sprinklers
(4) ESFR sprinklers
(5) Standard-response sprinklers used for modifications or additions to existing light hazard systems equipped with standard-response sprinklers
(6) Standard-response sprinklers used where individual standard-response sprinklers are replaced in existing light hazard systems

FAQ [9.4.3.1]

Can both residential sprinklers and quick-response spray sprinklers be used within the same dwelling unit?

Although both sprinklers have a fast-response thermal link and should activate in a similar time frame, their performance characteristics and design parameters are completely different. They are different types of sprinklers and are not to be mixed within the same compartment. This issue was clarified in the 2013 edition by changing 12.1.4 to better reflect their differences. If a dwelling unit is large enough, though, other portions of the unit could have a different design basis, as discussed in the commentary to 11.1.1.

The use of quick-response sprinklers, which are specified in 9.4.3.1(1), has been an option within NFPA 13 since the 1980 edition. Although quick-response sprinklers tend to enhance property protection and life safety, no requirements or incentives for their use were provided until the 1996 edition. The requirement that quick-response sprinklers be used in all light hazard occupancies, with appropriate exceptions to address existing systems, raises the baseline level of system performance.

Existing systems are not required to be upgraded when renovations occur; however, it is important to remember that sprinklers within the same compartment are required to be of the same RTI. When remodeling buildings or areas of a building, installers and inspectors should verify that all sprinklers within each compartment are of the same RTI.

The evidence clearly indicates that, all other factors being equal, using quick-response sprinklers rather than standard-response sprinklers reduces the fire damage. Most of the sprinkler systems installed in light hazard occupancies, such as hospitals, hotels, and apartments, are installed for life safety purposes. However, even in occupancies where life safety is not the primary reason for sprinkler system installation, such as in offices and restaurants, quick-response sprinklers are still considered important, because they limit fire damage and the potential for injury or death of occupants and fire fighters. Given the current level of knowledge concerning the performance of quick-response sprinklers, the use of standard-response technology instead of quick-response technology in light hazard occupancies is considered inappropriate.

Like quick-response sprinklers, residential sprinklers have fast-response operating elements and can be used in some light hazard occupancies in accordance with 12.1.1. However, residential sprinklers and quick-response sprinklers have different spray patterns. Therefore, these two types of sprinklers should not be considered interchangeable. Residential sprinklers should be used only as outlined in 12.1.1, and quick-response spray sprinklers should be used in other portions of the light hazard occupancies.

In some occupancies that are traditionally considered light hazard, ordinary hazard designs are sometimes used due to an uncertainty in the fire loading. Office buildings are an example of this type of occupancy. In such cases, quick-response sprinklers should be used, even though a higher sprinkler density is provided by using an ordinary hazard design.

A.9.4.3.1 When renovations occur in an existing building and no changes are made in the existing sprinkler system, this section is not intended to require the replacement of existing standard-response sprinklers with quick-response sprinklers.

EDUFIRE.IR

FAQ [9.4.3.2]

Why are all sprinklers in a compartment required to be quick-response sprinklers?

When quick-response and standard-response sprinklers are mixed in a compartment, skipping can occur and lead to an unnecessary number of sprinklers activating.

9.4.3.2 Where quick-response sprinklers are installed, all sprinklers within a compartment shall be quick-response unless otherwise permitted in 9.4.3.3, 9.4.3.4, or 9.4.3.5.

The selection of a sprinkler type will vary by occupancy. Where more than one type of sprinkler is used within a compartment, sprinklers with similar response characteristics should be used (i.e., standard- or quick-response). However, some hazards might benefit from designs that include the use of both standard- and quick-response sprinklers. Examples include rack storage protected by standard-response ceiling sprinklers and quick-response in-rack sprinklers. Another situation might involve the protection of openings using closely spaced quick-response sprinklers with standard-response sprinklers in the adjoining areas. Other designs can be compromised where sprinklers of differing sensitivity are mixed. An example is a system utilizing ESFR sprinklers adjacent to a system using high-temperature standard response sprinklers, as might be found in a warehouse. In that case, a fire occurring near the boundary might open ESFR sprinklers, which would not be contemplated in the standard-response system design.

9.4.3.3 Where there are no listed quick-response sprinklers in the temperature range required, standard-response sprinklers shall be permitted to be used.

9.4.3.4 The provisions of 9.4.3.2 shall not apply to in-rack sprinklers.

The mixing of quick-response or residential sprinklers with standard-response sprinklers in an occupancy (see 9.4.3.2 and 9.4.3.6) can cause more sprinklers to operate than necessary and change the order in which sprinklers operate — that is, those sprinklers farther away from the fire could operate first. In such a case, the sprinkler would provide some ceiling cooling but would allow the fire to grow larger than it would if the sprinklers closest to the fire operated first. Where the sprinklers in a light hazard occupancy are converted to quick-response or residential sprinklers, all sprinklers in the space must be either the quick-response or the residential type.

9.4.3.5 In other than light hazard occupancies, where a sprinkler carries a listing for both standard-response protection and quick-response protection at different coverage areas, that sprinkler shall be permitted to be installed within a compartment at the spacing for both the quick-response and standard-response listings without any separation between the areas so covered.

9.4.3.6 When existing light hazard systems are converted to use quick-response or residential sprinklers, all sprinklers in a compartment shall be changed.

9.4.4 Sprinklers with K-Factors Less than K-5.6 (80).

Sprinklers with nominal K-factors less than 5.6 (80) are commonly referred to as small orifice sprinklers. The 7 psi (0.5 bar) minimum pressure indicates that small orifice sprinklers should be used only where the required sprinkler discharge is less than that provided by a sprinkler with a nominal K-factor of 5.6 (80) operating at 7 psi (0.5 bar). The discharge pattern of small orifice sprinklers becomes distorted at high pressures.

9.4.4.1 Sprinklers shall have a minimum nominal K-factor of 5.6 (80) unless otherwise permitted by 9.4.4.

9.4.4.2 For light hazard occupancies, sprinklers having a nominal K-factor smaller than K-5.6 (80) shall be permitted, subject to the following restrictions:

(1) The system shall be hydraulically calculated.
(2) Sprinklers with nominal K-factors of less than K-5.6 (80) shall be installed only in wet pipe sprinkler systems or in accordance with the limitations of 9.4.4.3 or 9.4.4.4.
(3) A listed strainer shall be provided on the supply side of sprinklers with nominal K-factors of less than K-2.8 (40).

Sprinklers with K-factors less than 5.6 (80) are restricted to light hazard occupancies, because they are not as effective in controlling a fire as sprinklers with a nominal K-factor of 5.6 (80) and also do not pass the

EDUFIRE.IR

same fire tests that K-5.6 (80) and larger sprinklers do. They are restricted to wet systems because of the likelihood that the sprinkler orifice will be obstructed by internal pipe scale and foreign material prevalent in dry pipe and preaction systems. However, they might be permitted on dry and preaction systems that comply with 9.4.4.4. Exhibit 7.5 and Exhibit 7.6 show small orifice sprinklers, one adjacent to a K-5.6 (80) and the other adjacent to a K-25.2 (360) sprinkler.

The strainer requirement in 9.4.4.2(3) serves to limit the introduction of foreign materials into the sprinkler system through the water supply. However, the strainer has no effect on scale buildup within the pipe and the possibility of scale being carried to the sprinkler.

As is indicated in the commentary following Table 7.2.2.1, actual orifice sizes can be slightly smaller than the sprinkler's size classification. The inclusion of the term *nominal* in 9.4.4.2(3) clarifies that a strainer is not required for a nominal K-2.8 (40) sprinkler, even if the actual orifice size is as small as 2.6.

9.4.4.3 Sprinklers with nominal K-factors of less than K-5.6 (80) shall be permitted to be installed in conformance with 19.4.2 for protection against exposure fires.

Corrosion-resistant or internally galvanized systems are less likely to corrode, scale, and plug the small sprinkler orifice than steel pipe. However, per 9.4.4, the use of the smaller orifice sprinklers on dry and preaction systems is still limited to light hazard occupancies.

9.4.4.4 Sprinklers with nominal K-factors of K-4.2 (57) shall be permitted to be installed on dry pipe and preaction systems protecting light hazard occupancies where piping is corrosion resistant or internally galvanized.

9.4.5 Thread Size Limitations. Sprinklers having a K-factor exceeding K-5.6 (80) and having ½ in. (15 mm) National Pipe Thread (NPT) shall not be installed in new sprinkler systems.

Sprinklers that have nominal K-factors greater than 5.6 (80) and that are equipped with a ½ in. (15 mm) National Pipe Thread (NPT) are intended for use only on existing systems. Such a condition could exist when a system is being upgraded because the hazard in the building has changed. This approach allows an existing ½ in. (15 mm) tee or reducing elbow to be reused to accommodate the retrofit of sprinklers with K-factors of either 8.0 (115) or 11.2 (160).

9.5 Position, Location, Spacing, and Use of Sprinklers.

Proper positioning and spacing of sprinklers is important to ensure that sprinklers operate promptly and that obstructions to sprinkler distribution patterns do not adversely affect the performance of the sprinkler.

9.5.1 General.

9.5.1.1 Sprinklers shall be located, spaced, and positioned in accordance with the requirements of Section 9.5.

9.5.1.2 Sprinklers shall be positioned to provide protection of the area consistent with the overall objectives of this standard by controlling the positioning and allowable area of coverage for each sprinkler.

9.5.1.3 The requirements of 9.5.2 through 9.5.6 shall apply to all sprinkler types unless modified by more restrictive rules in Chapters 10 through 15.

The general requirements with which all sprinklers must comply are covered in Section 9.5. The section addresses protection area per sprinkler, sprinkler spacing, deflector position, obstruction to discharge, and clearance to storage. This generic information provides limiting minimum or maximum dimensions and guidance on how to determine those measurements.

EDUFIRE.IR

Chapters 10 through 15 provide specific requirements for standard pendent and upright spray sprinklers, sidewall standard spray sprinklers, extended coverage upright and pendent spray sprinklers, extended coverage sidewall spray sprinklers, residential pendent and sidewall sprinklers, CMSA sprinklers, ESFR sprinklers, and in-rack sprinklers.

There are multiple sprinkler types or technologies that can be used for sprinkler systems designed for the same occupancy use group or building type, as listed in 9.4.3.1. As such, it is important to apply the specific spacing, location, and obstruction rules for the sprinkler type being installed. The segregation of the rules in Chapters 10 through 15 is intended to help apply the spacing, location, and obstruction rules for each type of sprinkler with minimal confusion.

9.5.2 Protection Areas per Sprinkler.

9.5.2.1 Determination of Protection Area of Coverage.

9.5.2.1.1 The protection area of coverage per sprinkler (A_s) shall be determined as follows:

(1) Along branch lines as follows:
   (a) Determine distance between sprinklers (or to wall or obstruction in the case of the end sprinkler on the branch line) upstream and downstream
   (b) Choose the larger of either twice the distance to the wall or the distance to the next sprinkler
   (c) Define dimension as *S*

(2) Between branch lines as follows:
   (a) Determine perpendicular distance to the sprinkler on the adjacent branch line (or to a wall or obstruction in the case of the last branch line) on each side of the branch line on which the subject sprinkler is positioned
   (b) Choose the larger of either twice the distance to the wall or obstruction or the distance to the next sprinkler
   (c) Define dimension as *L*

CLOSER LOOK [9.5.2.1.1]

Determination of Protection Area of Sprinkler Coverage

For most sprinkler contractors, the issues of sprinkler spacing and location can get confusing at the design table (or computer screen) level, but where it really can be disconcerting is how the rules are applied in the field.

Tables 10.2.4.2.1(a), (b), and (c) provide rules for maximum area of coverage and spacing limitations per sprinkler for standard pendent and upright sprinklers, based on the occupancy classification. In most cases, regardless of the area of coverage allowed, standard sprinklers are permitted to be a maximum of 15 ft (4.6 m) apart. As a result of this common maximum allowable spacing, the paradigm develops naturally that sprinklers are permitted to be located up to 7 ft 6 in. (2.3 m) from a wall (not including the small room rule as defined in 3.3.196 and applied in 10.2.5.2.3).

This assumption often results in overspacing of sprinklers where field adjustments are made because the installer who shifts or modifies the sprinkler layout to accommodate ceiling tiles, lighting layouts, speakers, and so forth, often fails to apply the $S \times L$ rules used to determine the protection area of coverage per sprinkler as noted throughout 9.5.2.

As we see in 9.5.2.1.1, the protection area of coverage per sprinkler (As) must be determined as follows:

(1) Along branch lines as follows:
   (a) Determine the distance between sprinklers (or to wall or obstruction in the case of the end sprinkler on the branch line) upstream and downstream.
   (b) Choose the larger of either twice the distance to the wall or the distance to the next sprinkler.
   (c) Define the dimension as *S*.

(2) Between branch lines as follows:
   (a) Determine the perpendicular distance to the sprinkler on the adjacent branch line (or to a wall or obstruction in the case of the last branch line) on each side of the branch line on which the subject sprinkler is positioned.
   (b) Choose the larger of either twice the distance to the wall or obstruction or the distance to the next sprinkler.
   (c) Define dimension as L.

EDUFIRE.IR

CLOSER LOOK [9.5.2.1.1 (*Continued*)

The protection area of coverage of the sprinkler is established by multiplying the S dimension by the L dimension, as follows:

$$A_s = S \times L$$

Often missed is the fact that the *S* or *L* dimension must be taken as two times the distance to the wall or obstruction if that result is greater than the distance to the adjacent sprinkler. Therefore, when the 7 ft 6 in. (2.3 m) dimension is applied to the spacing from a wall in ordinary hazard occupancies where the maximum spacing per sprinkler is limited to 130 ft² (12.1 m²), the spacing between the adjacent sprinklers is then limited to 8 ft 8 in. (2.65 m).

One result of this common error of spacing and location of sprinklers is that less water than prescribed by the density/area curve (Figure 19.3.3.1.1) is discharged. For example, if the design called for a density of 0.15 gpm/ft² (6.1 mm/min) and sprinklers were located 7 ft 6 in. (2.3 m) from the wall but 10 ft (3.0 m) apart, with the assumption that this was acceptable for ordinary hazard environments, the prescribed discharge rate of flow at the first sprinkler would be 19.5 gpm (73.8 L/min) ($Q = A \times D$, or $Q = 130 \times 0.15$). In fact, the actual spacing is 150 ft² (14 m2), so the density is only 0.13 gpm per ft² (5.3 mm/min). While this might not seem like a huge issue, in fact, the deficit is about 17 percent of the prescribed waterflow rate.

This error in spacing might or might not impact the system's ability to control a fire, but that will depend on when and where the fire starts — making the point that system designers lay out the sprinklers based on known and planned issues related to the structure and architectural features. In many cases, however, it is the field installation crews who make the final decision where sprinklers are installed, so it is important that they are trained in the requirements of sprinkler spacing and location to ensure that changes are not made in the field without careful consideration.

9.5.2.1.2 The protection area of coverage of the sprinkler shall be established by multiplying the *S* dimension by the *L* dimension, as follows:

$$A_s = S \times L \qquad \textbf{[9.5.2.1.2]}$$

Exhibit 9.17 illustrates the various measurements that must be considered when determining the *S* and *L* dimensions, as established in 9.5.2.1.1 and used in the equation in 9.5.2.1.2. As shown in Exhibit 9.17, for the *S* dimension, if two times *A* is greater than *B*, then two times *A* is used as the *S* dimension. However, if *B* is greater than two times *A*, then *B* is used as the *S* dimension.

If $A \times 2 > B$, then $A \times 2 = S$
If $B > A \times 2$, then $B = S$

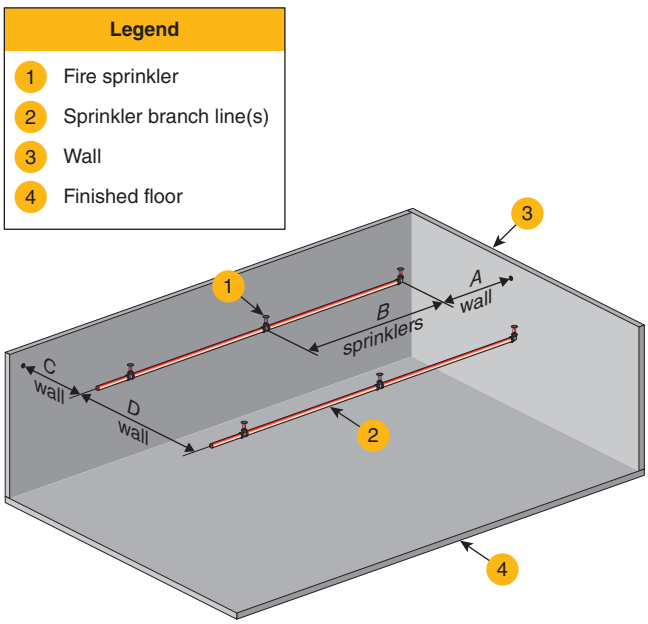

EXHIBIT 9.17 *Determining Area of Coverage for a Sprinkler. (Courtesy of Stephan Laforest)*

EDUFIRE.IR

For the *L* dimension, if two times *C* is greater than *D*, then two times *C* is used as the *L* dimension. However, if *D* is greater than two times *C*, then *D* is used as the *L* dimension.

If $C \times 2 > D$, then $C \times 2 = L$
If $D > C \times 2$, then $D = L$

Exhibit 9.18 provides a specific example with the following results:

S = the larger of 15 ft (4.6 m) or 3 ft (900 mm) × 2; therefore, *S* = 15 ft (4.6 m)
L = the larger of 10 ft (3 m) or 6 ft (1.8 m) × 2, therefore, *L* = 12 ft (3.7 m)
The area per sprinkler (*S* × *L*) is then 15 ft × 12 ft (4.6 m × 3.7 m), or 180 ft² (17 m²).

It is important to note that the maximum dimensions for *S* and *L* and the area of coverage per sprinkler are specified for specific types of sprinklers in Chapters 10 through 15. It is important to understand that the *S* or *L* dimension is always the greater of the two dimensions (2 times the distance to a wall or obstruction or the distance between sprinklers) because overspacing sprinklers can result in underdischarging the prescribed volume of water for the area protected by individual sprinklers along a wall or obstruction.

EXHIBIT 9.18 *Example of How to Determine Area of Coverage for a Specific Sprinkler. (Courtesy of Stephan Laforest)*

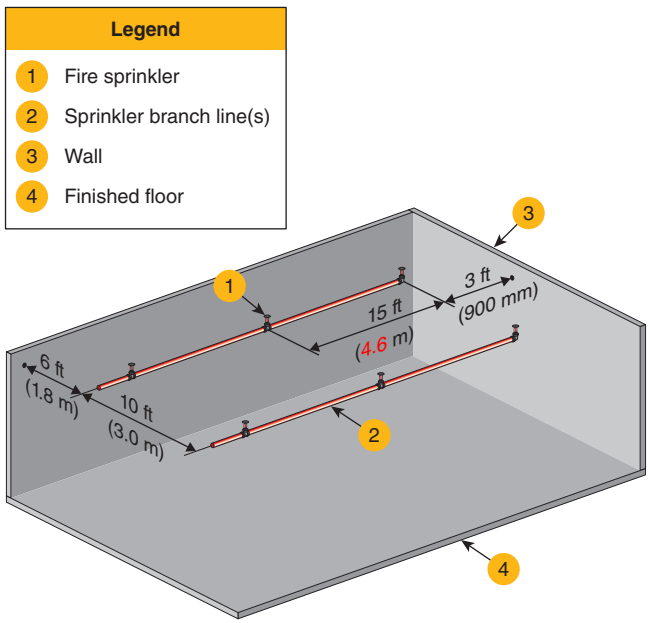

FAQ [9.5.2.2]

Why has a limit of 400 ft² (37 m²) been established for any sprinkler?

The maximum protection area of 400 ft² (37 m²) for any type of sprinkler limits the area that is permitted to be unprotected if the discharge from a single sprinkler is obstructed or if the sprinkler fails to operate. This maximum area of coverage is reduced for some sprinkler types as indicated in Chapters 10 through 15.

9.5.2.2 Maximum Protection Area of Coverage.

9.5.2.2.1 The maximum allowable protection area of coverage for a sprinkler (A_s) shall be in accordance with the value indicated in the section for each type or style of sprinkler.

9.5.2.2.2 The maximum area of coverage of any sprinkler shall not exceed 400 ft² (37 m²).

The maximum allowable area of coverage for a specific sprinkler depends on the type of sprinkler being considered, the construction features, and the occupancy hazard of the space in which the sprinkler is to be installed. The combustibility of the ceiling, the ceiling's effect on the flow of heat, and the ceiling's potential to obstruct the sprinkler's discharge pattern can affect overall sprinkler performance. Likewise, the actual distribution pattern — that is, the shape and throw — for a specific type of sprinkler also has an impact.

EDUFIRE.IR

9.5.3 Sprinkler Spacing.

9.5.3.1 Maximum Distance Between Sprinklers.

9.5.3.1.1 The maximum distance permitted between sprinklers shall be based on the centerline distance between adjacent sprinklers.

FAQ [9.5.3.1.1]

How is the distance between sprinklers measured?

Sprinklers are measured from centerline to centerline, not based on the *S* or *L* distances.

Sprinklers are normally installed directly on branch lines, and it is convenient to describe sprinkler spacing as being the space between sprinklers on the same branch line and the distance between sprinklers on adjacent branch lines. However, the distance measured, in all cases, is the distance between the centerlines of adjacent sprinklers. Sprinklers can be installed within a ceiling or on armovers or drops. In such cases, the distance between adjacent sprinklers in both directions should be measured between the centerlines of the sprinklers and not between the sprinklers and the branch line to which they are connected.

9.5.3.1.2 The maximum distance shall be measured along the slope of the ceiling.

9.5.3.1.3 The maximum distance permitted between sprinklers shall comply with the value indicated in the applicable section for each type or style of sprinkler.

The spacing of sprinklers along branch lines depends on the maximum distance permitted between the sprinklers on branch lines and the maximum area of coverage permitted per sprinkler. To minimize the amount of piping used, branch lines are usually spaced as far apart as possible, while maintaining even spacing within a ceiling bay or room. If the spacing of branch lines is uneven, the greatest distance between the sprinklers on the branch lines, measured between the centerline of the sprinklers, should be used to determine how far apart sprinklers can be spaced from each other along the branch lines.

When defining the area of protection of a sprinkler installed under a sloped ceiling or roof, a common question is whether the area of protection is measured along the slope or along the projected area on the floor.

The spacing of sprinklers is measured on the slope of the roof, and the maximum distances and areas given in Chapters 10 through 15 are applied to the distance measured along the slope. For curved surfaces, the distance should be measured along the slope projected between the two sprinklers, as indicated in Exhibit 9.19.

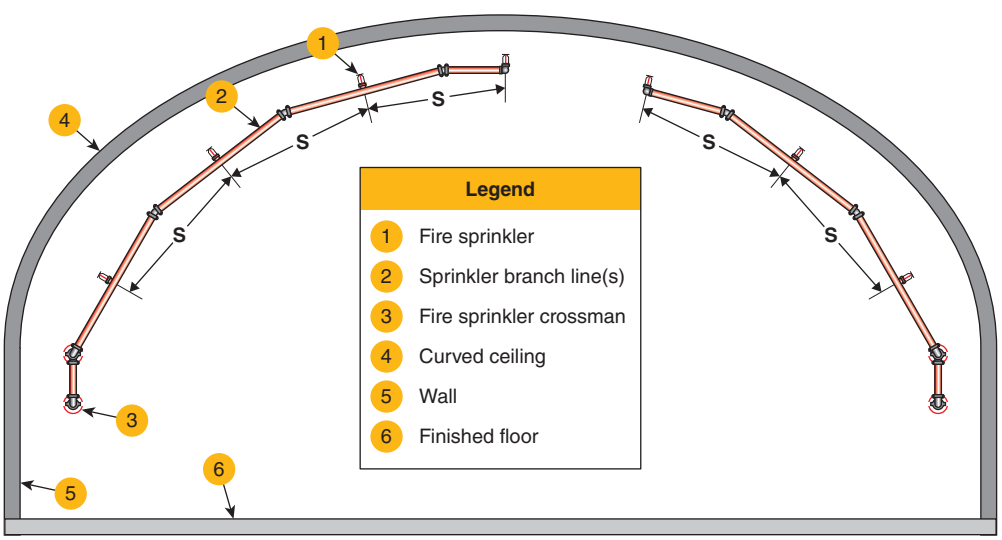

EXHIBIT 9.19 Sprinklers Installed Along Curved Ceiling. (Courtesy of Stephan Laforest)

EDUFIRE.IR

FAQ [9.5.3.2]

When determining the distance to a wall, how should it be measured?

The distance from the sprinkler to a wall is always measured to the inside surface of the wall. Where sprinklers have been omitted and 9.5.3.2.2 applies to the situation where shelving, cabinets, or trophy cases are installed on a wall, the measurement is not to the front of the case or shelf but back to the surface of the wall.

9.5.3.2 Maximum Distance from Walls.

9.5.3.2.1 The distance from sprinklers to walls shall not exceed one-half of the allowable maximum distance between sprinklers.

9.5.3.2.2 The distance from the wall to the sprinkler shall be measured to the wall behind furniture, such as wardrobes, cabinets, and trophy cases.

9.5.3.2.3 The distance from the wall to the sprinkler shall be measured to the wall when sprinklers are spaced near windows and no additional floor space is created.

Paragraph 9.5.3.2.3 applies when the wall is represented by a window. Where the window in the wall is set back from the inside surface of the wall, the distance is measured to the wall and not to the glass surface of the window where no additional floor area is created by the window. Where additional floor area is created by the window, the distance is measured to the glass surface of the window. Exhibit 9.20 shows examples of how the measurements should be made. In Exhibit 9.20 (top), the distance should be measured from the center of the sprinkler to the wall, not to the window. In Exhibit 9.20 (bottom), the distance should be measured from the center of the sprinkler to the wall in which the window is located.

EXHIBIT 9.20 Bay Window Measurements. (Courtesy of National Fire Sprinkler Association)

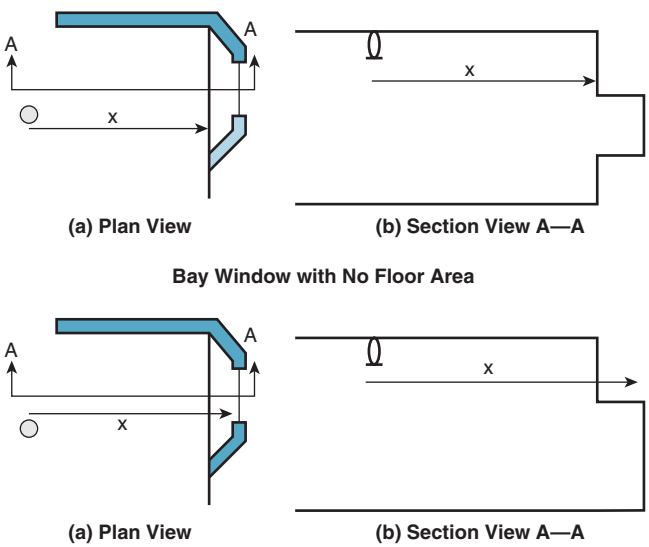

9.5.3.3 Minimum Distance from Walls.

9.5.3.3.1 The minimum distance permitted between a sprinkler and the wall shall comply with the value indicated in the applicable section for each type or style of sprinkler.

9.5.3.3.2 The distance from the wall to the sprinkler shall be measured perpendicular to the wall.

9.5.3.4 Minimum Distance Between Sprinklers.

9.5.3.4.1 A minimum distance shall be maintained between sprinklers to prevent operating sprinklers from wetting adjacent sprinklers and to prevent skipping of sprinklers.

9.5.3.4.2 The minimum distance permitted between sprinklers shall comply with the value indicated in the applicable section for each type or style of sprinkler.

EDUFIRE.IR

9.5.4 Deflector Position.

9.5.4.1* Distance Below Ceilings.

A.9.5.4.1 Batt insulation creates an effective thermal barrier and can be considered the ceiling/roof deck when determining distances between deflector and ceiling. The insulation needs to be installed in each pocket (not just above the sprinkler) and attached to the ceiling/roof in such a manner that it will not fall out during a fire prior to sprinkler activation.

9.5.4.1.1 The distances between the sprinkler deflector and the ceiling above shall be selected based on the type of sprinkler and the type of construction.

In general, sprinklers should be located near the ceiling, because the ceiling is where heat from a fire typically collects. When the sprinkler is located farther down from the ceiling, response time generally increases unless the sprinkler is located within the fire plume. Operation of sprinklers located very close to the ceiling also can be delayed if they are located in the dead-air space that develops under some ceilings. Obstructed construction requires that sprinklers be located farther below the ceiling to allow the sprinkler discharge pattern to develop. This arrangement results in a slower sprinkler response time.

Ideally, for measurements affecting sprinkler sensitivity, the distance below the ceiling should be measured to the centerline of the thermal element rather than the deflector, because the relationship between the thermal element and the deflector varies with different sprinklers. In some cases, the centerline of the sprinkler's thermal element is not easily determined. Because the distance to the deflector is more readily attainable, NFPA 13 uses that method to measure the distance from the sprinkler to ceilings and obstructions. (See Exhibit 9.21.)

FAQ [9.5.4.1]

What location should be utilized when measuring the distance to the ceiling for corrugated metal decking?

When the ceiling is not flat, normally the distance to the ceiling is measured to the highest point above the sprinklers. When a corrugated metal deck is used, the standard permits the distance to be measured from the bottom of the deck, since, in most metal deck roofs, the difference in height between the bottom and the top of the corrugated channel is minimal, and the collection of heat at the ceiling is not affected. If the ceiling deck varies by more than 3 in. (75 mm), as it might for a concrete pan deck, the distance must be measured from the higher point on the deck.

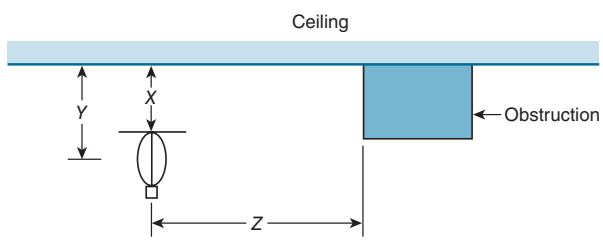

X = position of the deflector below the ceiling
Y = position of the center of the sprinkler link below the ceiling
Z = measurement from the near edge of the obstruction to the centerline of the sprinkler

EXHIBIT 9.21 *Sprinkler Deflector Location.*

9.5.4.1.2 Corrugated Metal Deck Roofs.

9.5.4.1.2.1 For corrugated metal deck roofs up to 3 in. (75 mm) in depth, the distance shall be measured to the sprinkler from the bottom of the deck.

9.5.4.1.2.2 For decks deeper than 3 in. (75 mm), the distance shall be measured to the highest point on the deck.

9.5.4.1.3 For ceilings that have insulation installed directly against underside of the ceiling or roof structure, the deflector distance shall be measured from the bottom of the insulation and shall be in accordance with 9.5.4.1.3.1, 9.5.4.1.3.2, and 9.5.4.1.3.3.

Paragraph 9.5.4.1.3 allows the underside of insulation to be treated as the ceiling for the purpose of determining sprinkler placement. The ceiling provides a means of heat collection to aid in the sprinkler's activation. The use of insulation as a thermal barrier is readily accepted by NFPA 13, as indicated by the requirements of 9.2.1 for the protection of concealed spaces. Therefore, heat from a fire starts to collect at the insulation, rather than at the decking above the insulation. It is important to recognize that the thermal barrier is created by the insulation and not by the aluminum or other facing on the insulation. When the insulation is not installed tight to the ceiling and sags, 9.5.4.1.3.3 identifies how to measure the distance. In all cases, the sprinkler must be installed below the low point of the insulation so that the insulation does not interfere with the sprinkler distribution pattern.

EDUFIRE.IR

N **9.5.4.1.3.1** Insulation used to measure sprinkler deflector distance shall be batt insulation or insulation that withstands 3 lb/ft^2 (0.13 kg/m^2) uplift force.

9.5.4.1.3.2 For insulation that is installed directly against the ceiling or roof structure and is installed flat and parallel to the ceiling or roof structure, the deflector distance shall be measured to the underside of the insulation.

9.5.4.1.3.3 For insulation that is installed in a manner that causes it to deflect or sag down from the ceiling or roof structure, the deflector distance shall be measured as half of the distance of the deflection from the insulation high point to the insulation low point.

(A) If the deflection or sag in the insulation exceeds 6 in. (150 mm), the deflector distance shall be measured to the high point of the insulation.

(B) The deflector shall not be positioned above the low point of the insulation.

Exhibit 9.22 provides an example of sprinkler positioning in relation to insulation in accordance with 9.5.4.1.3.3.

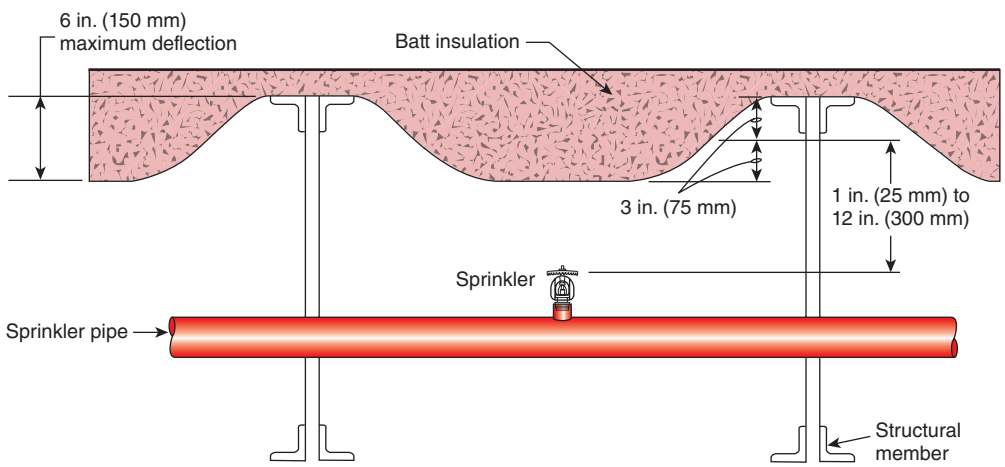

EXHIBIT 9.22 Sprinkler Positioning Under Roof Insulation.

9.5.4.1.4* Heat collectors shall not be used as a means to assist the activation of a sprinkler.

A.9.5.4.1.4 The rules describing the maximum distance permitted for sprinklers below ceilings must be followed. The concept of placing a small "heat collector" above a sprinkler to assist in activation is not appropriate, nor is it contemplated in this standard. There is evidence that objects above a sprinkler will delay the activation of the sprinkler where fires are not directly below the sprinkler (but are still in the coverage area of the sprinkler). One of the objectives of the standard is to cool the ceiling near the structural members with spray from a nearby sprinkler, which is not accomplished by a sprinkler far down from the ceiling, and a heat collector will not help this situation.

9.5.4.2 Deflector Orientation. Deflectors of sprinklers shall be aligned parallel to ceilings, roofs, or the incline of stairs.

Maintaining the deflector parallel to the ceiling results in minimal obstructions to discharge (it prevents the discharge from hitting a sloped ceiling) and a more effective discharge pattern.

EDUFIRE.IR

9.5.5 Obstructions to Sprinkler Discharge.

In the 1991 edition of NFPA 13, the sprinkler obstruction requirements were rewritten so that they no longer referred to specific construction features, such as beams and bar joist webs. However, the revised method of categorizing obstructions as either horizontal or vertical was confusing. For the 1996 edition, a new approach was introduced for dealing with obstructions to sprinkler discharge. Performance objectives were added, and the positioning rules were revised to specifically achieve those objectives. Currently, 9.5.5 provides general requirements, while Chapters 10 through 15 provide requirements for specific types of sprinklers.

NFPA 13 addresses three general areas of concern with regard to obstructions. The first is the overall concern addressed by 9.5.5.1, which is to ensure that a sufficient amount of water from the sprinkler reaches the hazard. This first concern is largely addressed by using the 1991 edition's requirements for horizontal obstructions, which dealt largely with continuous obstructions, such as beams, top chord members, and ducts that are tight to or very near the ceiling and in close proximity to the sprinkler.

The second concern, which is addressed by 9.5.5.2, deals with the obstruction to sprinkler discharge pattern development. Paragraph 9.5.5.2 addresses continuous and noncontinuous obstructions, such as piping, light fixtures, truss webs, or building columns located within the first 18 in. (450 mm) of the sprinkler deflector (see Figure A.9.5.5.1). Obstructions located in this zone prevent the proper sprinkler discharge pattern from developing. As a result, sprinklers must be positioned so that they are located a specified distance from the obstruction. The correct position is addressed within the section for each type of sprinkler. This requirement does not apply to continuous obstructions that are tight to the ceiling. Even though obstructions more than 18 in. (450 mm) below the sprinklers can prevent the proper discharge pattern from developing, the overall objective addressed in 9.5.5.1 provides for adequate sprinkler placement.

The third area of concern, which is addressed by 9.5.5.3, deals with obstructions that prevent the sprinkler discharge from reaching the hazard. These obstructions typically consist of continuous and noncontinuous obstructions that interrupt the water spray pattern once it is below the 18 in. (450 mm) discharge pattern development zone. These types of obstructions can include overhead doors, ducts, or decks. When they exceed a certain dimension, sprinklers must be located beneath them.

Another category of obstruction that is applicable to certain types of sprinklers includes those obstructions that are suspended from the ceiling, such as privacy curtains in a hospital or floor-mounted obstructions that do not reach the ceiling, such as partitions in an office cubicle. In both cases, the sprinklers must be positioned so that a sufficient portion of the discharge pattern can extend over the obstruction.

While the first three concerns apply to all sprinklers, certain modifications are made to the concerns and positioning rules for specific types of sprinklers. See Chapters 10 through 15.

9.5.5.1* Performance Objective. Sprinklers shall be located so as to minimize obstructions to discharge as defined in 9.5.5.2 and 9.5.5.3, or additional sprinklers shall be provided to ensure adequate coverage of the hazard. *(See Figure A.9.5.5.1.)*

Locating sprinklers to minimize the impact of obstructions to the sprinkler discharge is the preferred approach. The use of additional sprinklers to compensate for obstructions increases the water demand and the cost of the sprinkler system and might not provide the same level of protection that would be afforded if the effects of obstructions were minimized.

A.9.5.5.1 See Figure A.9.5.5.1 for a representation of a typical spray sprinkler pattern.

NFPA 13 strives to minimize the effect of obstructions through the use of specific criteria in 9.5.5, 10.2.7, 10.3.6, 11.2.5, 11.3.6, 12.1.10, 12.1.11, 13.2.8, and 14.2.11. The obstruction criteria for storage sprinklers in 13.2.8 and 14.2.11 is the most stringent. For other types of sprinklers, dry spaces caused be obstructions such as columns and wall configurations will occur and can comply with the standard. The general rules known as the "three-times rule" and the "four-times rule" define dry areas or "shadow areas" that are acceptable behind obstructions like columns and walls. Tests have shown that the larger the column, the larger the dry area behind the column will be and the longer it will take for sprinklers on the other side of the column to react to the fire behind the column. In a very large compartment, the delay could become unacceptable. The delay in sprinkler response can be minimized with smaller columns, with smaller compartments, or by putting sprinklers on the other side of the column.

EDUFIRE.IR

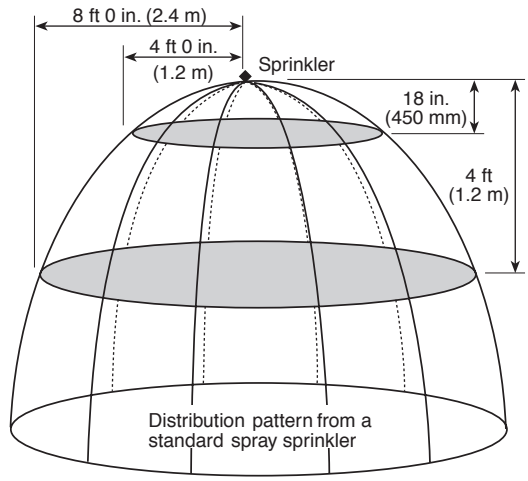

FIGURE A.9.5.5.1 *Obstructions to Sprinkler Discharge Pattern Development for Standard Upright or Pendent Spray Sprinklers.*

Where offset walls create shadowed areas, the sprinkler does not appear to be significantly delayed in activation. Tests have shown that once the sprinkler activates, water will not cover all areas behind the obstructions.

9.5.5.2* Obstructions to Sprinkler Discharge Pattern Development.

A.9.5.5.2 Where of a depth that will obstruct the spray discharge pattern, girders, beams, or trusses forming narrow pockets of combustible construction along walls can require additional sprinklers. In light and ordinary hazard occupancies, small areas created by architectural features such as planter box windows, bay windows, wing walls, and similar features can be evaluated as follows:

(1) Where no additional floor area is created by the architectural feature, no additional sprinkler protection is required.
(2) Where additional floor area is created by an architectural feature, no additional sprinkler protection is required, provided all of the following conditions are met:
  (a) The floor area does not exceed 18 ft^2 (1.7 m^2).
  (b) The floor area is not greater than 2 ft (600 mm) in depth at the deepest point of the architectural feature to the plane of the primary wall where measured along the finished floor.
  (c) The floor area is not greater than 9 ft (2.7 m) in length where measured along the plane of the primary wall.

Measurement from the deepest point of the architectural feature to the sprinkler should not exceed the maximum listed spacing of the sprinkler. When no additional floor space is created, the hydraulic design is not required to consider the area created by the architectural feature. Where the obstruction criteria established by this standard are followed, sprinkler spray patterns will not necessarily get water to every square foot of space within a room.

Obstructions that affect sprinkler discharge pattern development are located within the sprinkler discharge pattern, as shown in Figure A.9.5.5.1. The obstructions can be continuous items, such as large beams; girders; top and bottom truss chord members; soffits; long horizontal light fixtures; and heating, ventilation, and air-conditioning (HVAC) ductwork, or they can be smaller noncontinuous obstructions, such as building columns, bar joists and truss webs, and certain light fixtures.

EDUFIRE.IR

NFPA 13 requires a minimum distance to be maintained between the sprinkler and smaller noncontinuous obstructions. A sprinkler must be positioned so that the discharge pattern is below the solid continuous obstructions.

9.5.5.2.1 Continuous or noncontinuous obstructions less than or equal to 18 in. (450 mm) below the sprinkler deflector that prevent the pattern from fully developing shall comply with 9.5.5.2.

The discharge pattern for most sprinklers is fully developed at about a 4 ft (1.2 m) distance below the sprinkler (see Figure A.9.5.5.1). However, avoiding all obstructions in this space is not practical, which is the reason for the requirement in 9.5.5.2.1. Most of the pattern development occurs within a zone beginning at the sprinkler deflector and extending 18 in. to 36 in. (450 mm to 900 mm) below the sprinkler. The obstructions to sprinkler discharge pattern development are a concern within this zone. The minimum distance of 18 in. (450 mm) is modified in subsequent sections for ESFR and CMSA sprinklers, which require a larger space for pattern development.

9.5.5.2.2 Sprinklers shall be positioned in accordance with the minimum distances and special requirements of Section 10.2 through Section 14.2 so that they are located sufficiently away from obstructions such as truss webs and chords, pipes, columns, and fixtures.

9.5.5.3* Obstructions that Prevent Sprinkler Discharge from Reaching Hazard. Continuous or noncontinuous obstructions that interrupt the water discharge in a horizontal plane more than 18 in. (450 mm) below the sprinkler deflector in a manner to limit the distribution from reaching the protected hazard shall comply with 9.5.5.3.

Once the sprinkler discharge pattern is developed, obstructions in the horizontal plane can prevent the sprinkler discharge from reaching the protected hazard. In some situations, the obstruction cannot be avoided, and additional sprinklers are necessary to compensate for areas under the obstruction that would not receive adequate coverage.

A.9.5.5.3 Frequently, additional sprinkler equipment can be avoided by reducing the width of decks or galleries and providing proper clearances. Slatting of decks or walkways or the use of open grating as a substitute for automatic sprinklers thereunder is not acceptable. The use of cloth or paper dust tops for rooms forms obstruction to water distribution. If dust tops are used, the area below should be sprinklered.

9.5.5.3.1* Sprinklers shall be installed under fixed obstructions over 4 ft (1.2 m) in width.

A.9.5.5.3.1 When obstructions are located more than 18 in. (450 mm) below the sprinkler deflector, an adequate spray pattern develops and obstructions up to and including 4 ft (1.2 m) wide do not require additional protection underneath. Examples are ducts, decks, open grate flooring, catwalks, cutting tables, overhead doors, soffits, ceiling panels, and other similar obstructions.

ASK THE AHJ

When determining if the obstruction is more than 4 ft (1.2 m) wide for 9.5.5.3.1, and for similar requirements throughout Chapters 9 through 15, what separation is necessary between obstructions to deem the adjacent obstructions to be their own separate obstructions rather than one overall obstruction?

There is no guidance for this concern in the standard and, therefore, design judgment will be necessary.

N **9.5.5.3.1.1*** Open grate flooring over 4 ft (1.2 m) in width shall require sprinkler protection below the grating.

N **A.9.5.5.3.1.1** Where multiple levels of ducts, pipes, or other similar horizontal obstructions that are over 4 ft (1.2 m) wide are stacked vertically, additional levels of sprinkler protection between the vertical levels are not required. A single level of sprinklers beneath the lowest level of the obstruction is adequate, provided that the obstructions are noncombustible and that combustible materials are not stored between the levels.

EDUFIRE.IR

9.5.5.3.1.2* Sprinklers located under obstructions shall comply with one of the following:

(1) Installed below the obstruction
(2) Installed adjacent to the obstruction not more than 3 in. (75 mm) from the outside edge of the obstruction

A.9.5.5.3.1.2 See Figure A.9.5.5.3.1.2.

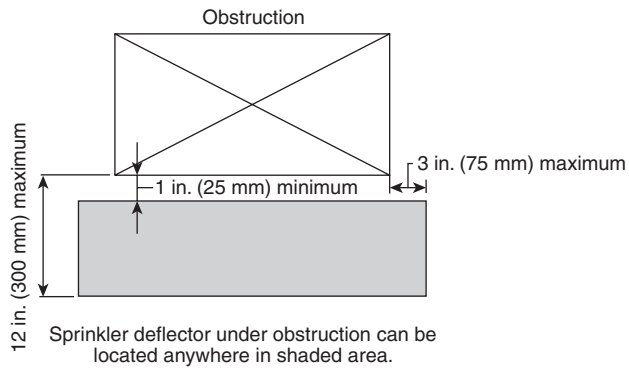

FIGURE A.9.5.5.3.1.2 *Sprinkler Location Below Obstruction.*

9.5.5.3.1.3 Where sprinklers are located adjacent to the obstruction, they shall be of the intermediate level rack type.

Sprinklers are required to be of the intermediate level rack type, which are provided with a water shield, to prevent the discharge of a sprinkler located at the ceiling level from cooling the thermal response element of the sprinkler located adjacent to an obstruction below. If the thermal response element is cooled by the sprinkler overhead it may delay or prevent the sprinkler from operating.

9.5.5.3.1.4 The deflector of automatic sprinklers installed under fixed obstructions shall be positioned no more than 12 in. (300 mm) below the bottom of the obstruction.

9.5.5.3.1.5 Sprinklers shall not be required under noncombustible obstructions over 4 ft (1.2 m) wide where the bottom of the obstruction is 24 in. (600 mm) or less above the floor or deck.

9.5.5.3.2* Sprinklers shall not be required under obstructions that are not fixed in place, such as conference tables.

The size at which obstructions become too large to ignore is typically 4 ft (1.2 m). This width is reduced in Chapters 13 and 14 for CMSA and ESFR sprinklers. Paragraph 9.5.5.3.2 recognizes that some obstructions larger than 4 ft (1.2 m), for example, a conference table, are not fixed in place and are not likely to have any significant combustibles located beneath them. In such cases, additional sprinklers are not needed below the obstruction.

ASK THE AHJ

What tolerance will be given by the authority having jurisdiction for the 4 ft (1.2 m) measurement?

Because the 4 ft (1.2 m) dimension is justified through past practice and experience, not through fire testing, sprinklers should be provided under the obstruction if there is any question that the obstruction might exceed 4 ft (1.2 m). Many authorities having jurisdiction will enforce a zero-tolerance cutoff point at 4 ft (1.2 m) for similar reasoning. For example, a 48 in. (1.2 m) wide duct would not require a sprinkler beneath it but adding a 1 in. (25 mm) insulation around the duct would result in a 50 in. (1250 mm) wide obstruction, thus requiring sprinkler protection below the obstruction.

EDUFIRE.IR

ASK THE AHJ

Why would sprinklers need to be installed to protect under an open-grate walkway exceeding 4 ft (1.2 m) in width, when sprinkler discharge will be able to get through the open grating?

Authorities having jurisdiction often find that open-grate walkways are covered with storage/products or by floor pads to keep debris from falling through the walkway onto equipment below. Such placement would not allow sprinkler discharge to get through the open grating, and the walkway would become a solid obstruction. Because of the frequency of this problem, the intent of the standard is to protect beneath these larger walkways regardless of whether or not the owner/operator intends to cover the walkway.

N **A.9.5.5.3.2** Where obstructions are located more than 18 in. (450 mm) below the sprinkler deflector, an adequate spray pattern develops and obstructions up to and including 4 ft (1.2 m) wide do not require additional protection underneath. Examples are ducts, decks, open grate flooring, catwalks, cutting tables, overhead doors, soffits, ceiling panels, and other similar obstructions.

9.5.5.3.3 Sprinklers installed under obstructions shall be of the same type (spray, CMSA, ESFR, residential) as installed at the ceiling except as permitted by 9.5.5.3.3.1.

9.5.5.3.3.1 Spray sprinklers shall be permitted to be utilized under overhead doors.

9.5.5.3.4* Sprinklers installed under open gratings shall be of the intermediate level/rack storage type or otherwise shielded from the discharge of overhead sprinklers.

A.9.5.5.3.4 Sprinklers under open gratings should be provided with shields. Shields over automatic sprinklers should not be less, in least dimension, than four times the distance between the shield and fusible element, except special sprinklers incorporating a built-in shield need not comply with this recommendation if listed for the particular application.

Shields should not be confused with sprinkler guards, which are protective cages that surround a sprinkler and which are addressed in 16.2.6. Guards, by their basic design, have the potential to disrupt the intended sprinkler spray patterns. Listed guards are evaluated with specific sprinklers to verify that the disruption does not affect the performance of the sprinkler. Use of an unlisted guard, a guard listed for a different sprinkler, or an incorrectly installed guard can prevent the sprinkler from operating properly.

EXHIBIT 9.23 Sprinkler Discharge Obstructed When Overhead Door Is in Open Position.

FAQ [9.5.5.3.3.1]

Does NFPA 13 consider overhead doors an obstruction?

Yes, overhead doors are considered an obstruction (see 9.5.5.3.1 and 9.5.5.3.3.1). Although the overhead door is not considered an obstruction when in the closed position, as shown in Exhibit 9.23, the discharge from the sprinkler over the door will be obstructed when the door is in the open position. Sprinklers need to be positioned so that their discharge can adequately reach under the overhead door

FAQ [9.5.5.3.4]

Where open grating is utilized, are additional sprinklers required below the open grating?

Although open grating allows heat from a fire to pass through it and reach a sprinkler at the ceiling level, the openings are not adequate to compensate for obstructions to the sprinkler spray pattern. Thus, supplemental sprinklers under the open grating deck are necessary. Gratings or slatted decks and walkways frequently are covered with goods in storage or by a light surface dust stop. Sprinklers are required under such gratings and walkways. Sprinklers located below the open grating must be provided with a water shield or be of the intermediate level/rack storage type to prevent water from sprinklers that are operating above from wetting the thermal element and delaying sprinkler operation.

EDUFIRE.IR

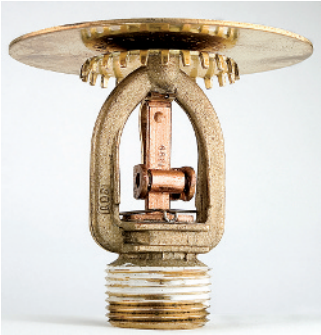

EXHIBIT 9.24 Intermediate Level Sprinkler. (Courtesy of Tyco Fire Protection Products LP)

Guards should be used only where a sprinkler is in danger of being struck by an object. A sprinkler guard can minimize the impact from physical damage by a variety of objects, including pallet loads used in rack storage facilities. Guards are also useful in protecting people from injury by sprinklers in areas where the clearance is low, such as under a stairwell. Shields are designed to protect sprinklers from overhead water discharge. An example of an intermediate level sprinkler provided with a shield is shown in Exhibit 9.24.

9.5.5.4 Closets. In all closets and compartments, including those closets housing mechanical equipment, that are not larger than 400 ft^3 (11 m^3) in size, a single sprinkler at the highest ceiling level shall be sufficient without regard to obstructions or minimum distance to the wall.

The concept of providing a single sprinkler in a small closet has been included in NFPA 13R for many cycles, but it was added to the 2013 edition of NFPA 13 and is applicable to small closets in all occupancies. In small spaces such as closets, a sprinkler will react to a fire in a reasonable time. Significant water will flood the space regardless of the placement of the sprinkler or potential obstructions, so providing a single sprinkler in a small closet is all that is necessary.

9.5.6 Clearance from Deflector to Storage.

9.5.6.1* Unless the requirements of 9.5.6.2, 9.5.6.3, 9.5.6.4, or 9.5.6.5 are met, the clearance between the deflector and the top of storage or contents of the room shall be 18 in. (450 mm) or greater.

A.9.5.6.1 The 18 in. (450 mm) clearance does not apply to vehicles in concrete parking structures.

9.5.6.2 Where other standards specify greater clearance to storage minimums, they shall be followed.

9.5.6.3 A minimum clearance to storage of 36 in. (900 mm) shall be permitted for special sprinklers.

9.5.6.4 A minimum clearance to storage of less than 18 in. (450 mm) between the top of storage and ceiling sprinkler deflectors shall be permitted where proven by successful large-scale fire tests for the particular hazard.

9.5.6.5 The clearance from the top of storage to sprinkler deflectors shall be not less than 36 in. (900 mm) where rubber tires are stored.

9.5.6.6 The 18 in. (450 mm) dimension shall not limit the height of shelving on a wall or shelving against a wall in accordance with 10.2.8, 10.3.7, 11.2.6, and Sections 11.3 and 12.1.

9.5.6.6.1 Where shelving is installed on a wall and is not directly below sprinklers, the shelves, including storage thereon, shall be permitted to extend above the level of a plane located 18 in. (450 mm) below ceiling sprinkler deflectors.

9.5.6.6.2 Shelving, and any storage thereon, directly below the sprinklers shall not extend above a plane located 18 in. (450 mm) below the ceiling sprinkler deflectors.

References Cited in Commentary

National Fire Protection Association, 1 Batterymarch Park, Quincy, MA 02169-7471.

NFPA 13D, *Standard for the Installation of Sprinkler Systems in One- and Two-Family Dwellings and Manufactured Homes*, 2019 edition.

NFPA 13R, *Standard for the Installation of Sprinkler Systems in Low-Rise Residential Occupancies*, 2019 edition.

NFPA 25, *Standard for the Inspection, Testing, and Maintenance of Water-Based Fire Protection Systems*, 2017 edition.

EDUFIRE.IR

NFPA *101®*, *Life Safety Code®*, 2018 edition.
NFPA 703, *Standard for Fire Retardant–Treated Wood and Fire-Retardant Coatings for Building Materials,* 2018 edition.
NFPA 5000®, *Building Construction and Safety Code®*, 2018 edition.

American Society of Mechanical Engineers, Two Park Avenue, New York, NY 10016-5990.
ASME A17.1/CSA B44, *Safety Code for Elevators and Escalators,* 2016.
Proceedings of the Symposium on Elevators and Fires, February 1991.

Underwriters Laboratories Inc., 333 Pfingsten Road, Northbrook, IL 60062-2096.
"Fact Finding Report on Automatic Sprinkler Protection for Fur Storage Vaults," November 25, 1947.

EDUFIRE.IR

Sprinkler Protection for Cloud Ceilings

Project Background

The Fire Protection Research Foundation (FPRF) initiated a research program to understand how cloud ceiling panels affect sprinkler actuation thresholds with an overall goal to provide the technical basis for sprinkler installation requirements. Two phases of work were completed to develop guidance for sprinkler installation requirements by determining the maximum gap size between the wall and the cloud edge at which structural ceiling sprinklers are not effective. Phase 1 investigated the effectiveness of sprinklers on large area clouds. Phase 2 focused on developing guidance for sprinkler installation requirements for small area clouds.

Cloud ceilings are ceiling panels that sit beneath the structural ceiling of a room or space and are increasingly being seen in commercial and industrial buildings. Cloud panels range in area from discrete ceiling panels with large spaces in between to close-to-full-room-area contiguous coverage with small gaps at the perimeter wall location. Cloud ceilings pose a challenge by allowing heat from the fire plume to pass through the gaps between panels and between walls and panels and develop a gas layer at the structural ceiling.

The 2013 and earlier editions of NFPA 13 did not specifically address this type of ceiling and in most arrangements required sprinklers at both the structural ceiling and the cloud ceiling panel elevations.

Project Description

The first phase of the project studied large area clouds or a cloud ceiling where each cloud would have at least one sprinkler based on a 15 ft × 15 ft (4.6 m × 4.6 m) spacing. The second phase studied smaller area clouds, which means that not every cloud would have a sprinkler installed based on a 15 ft × 15 ft (4.6 m × 4.6 m) spacing, because it was of interest to the technical committee to investigate what impact the additional gaps would have if sprinklers were installed in every other cloud or every third cloud rather than every cloud. In both phases, the clouds, shown in the following exhibit, were noncombustible, uniform clouds that were level and coplanar.

The project started with a literature review to identify any relevant studies that have been completed. Then, both phases of the project were conducted in two parts. The first part of each phase was an experimental study to develop and validate a modeling approach for cloud ceiling sprinklers using Fire Dynamics Simulator (FDS), which is a computational fluid dynamics (CFD) model developed by the National Institute of Standards and Technology (NIST) to simulate fire-driven fluid flow. A small series of full-scale experiments were simulated in FDS to compare predictions against the experimental data, and a modeling approach was developed that resulted in predictions that had a similar error compared with other data sets in the FDS validation documentation.

The same modeling approach used for the validation effort was then used for a series of simulations to determine conditions in which sprinklers would not be needed (or effective) on the structural ceiling where a cloud ceiling is present. A schematic of the simulation geometry is shown in the next exhibit.

During Phase 1, a total of 188 simulations were run in FDS varying gap size between clouds, cloud ceiling height, fire location, fire growth rate, and height from the cloud ceiling to the structural ceiling (or plenum height). The cloud ceiling heights that were simulated were 8 ft (2.44 m), 14 ft (4.27 m), 20 ft (6.10 m), and 34 ft (10.4 m); two plenum heights were used: 2 ft (0.61 m) and 4 ft (1.22 m).

Plume with Large Cloud Panels from Phase 1 Experiments.

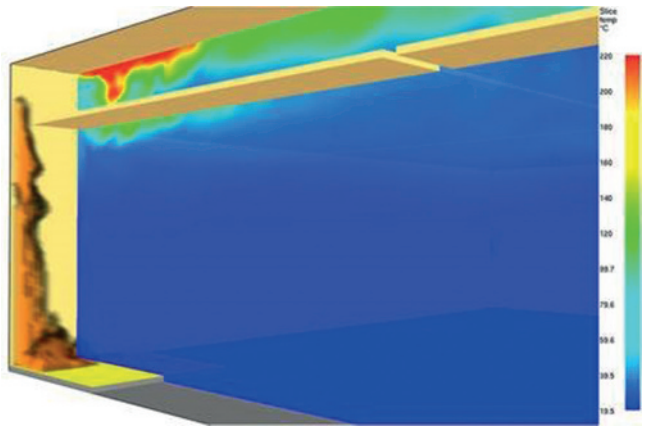

FDS Simulation Image Showing Flame Location and Compartment Temperatures.

EDUFIRE.IR

Sprinkler Protection for Cloud Ceilings *Continued*

Gap sizes were based on a percentage of cloud ceiling height. Five fire locations were considered:

- fire located between two cloud panels
- fire located between four cloud panels
- fire located between the wall and one cloud panel
- fire located between the wall and two cloud panels
- fire in the corner of a room

Both medium and fast growth rate fires were simulated.

The simulations completed for Phase 2 built on the knowledge gained in Phase 1, so during Phase 2, a total of 44 simulations were run varying the cloud array (3 × 3, 6 × 6, and 9 × 9), gap size between clouds (based on a percentage of cloud ceiling height), ceiling height [8 ft (2.44 m), 14 ft (4.27 m), and 20 ft (6.10 m)], and fire location (corner fire and fire directly below intersection of four clouds).

The following performance criteria were used for both phases of the project:

- Below-cloud sprinklers must activate due to the fire plume and not due to development of a hot layer.
- Temperature at 63 in. (1.6 m) above the floor cannot exceed 200°F (93°C) away from the fire and cannot exceed 130°F (54°C) for more than 2 minutes.
- Temperature below either the structural ceiling or the drop ceiling cannot exceed 600°F (315°C) at a distance of 50 percent of a standard flat ceiling sprinkler spacing.
- Backside temperature of the structural and cloud ceilings must remain below 392°F (200°C).

Results

Based on the modeling results for Phase 1, a permissible gap size (as a function of cloud ceiling height) was found for when sprinklers can be omitted on the structural ceiling and only installed on the cloud ceiling level. A one-part and a two-part rule were developed.

Where each cloud has at least one sprinkler based on normal listed spacing and clouds are level, coplanar, and constructed of noncombustible construction, "sprinklers can be omitted in the structural ceiling if the gap between a wall and any cloud or between two adjacent clouds is less than or equal to 1 in. (2.54 cm) of gap per foot (m) of ceiling height."[1] The two-part rule developed for Phase 1, which applies to the same type of clouds as above, has variance for cloud-wall and cloud-cloud gaps, "sprinklers can be omitted in the structural ceiling if,

- "The gap between a wall and any cloud is less than or equal to 1 in. (25.4 mm) of gap per foot (m) of ceiling height, or
- "The gap between any two adjacent clouds is less than or equal to 1.25 in. (31.8 mm) of gap per foot (m) of ceiling height."[2]

The results of the second phase indicated that there was a complicated relationship between cloud size, gap size, and ceiling height, which is best characterized by the ratio of the area of gaps over the entire area of the ceiling (gap area fraction) to the height of the cloud ceiling. Again, two rule sets were developed. The first is an equation that calculates coverage area as a function of the ratio of the gap area fraction to the ceiling height:

$$A = 0.076 \times (R_G)^2$$

where A is the coverage area and R_G is the ratio of the gap area fraction to the ceiling height.

The computed coverage area should be limited by NFPA 13 restrictions [e.g., a maximum of 225 ft² (20.9 m²) for a standard sprinkler]. A computed coverage area using the equation above that is less than what would be permitted by NFPA 13 requirements indicates that sprinklers need to be installed on both the structural ceiling level and the cloud ceiling level.

The second rule set developed for smaller clouds is a sprinkler spacing rule for sprinklers when not installed on all clouds and every other or every third cloud is skipped. This rule set is shown in the following table.

This research was reviewed by the NFPA 13 Cloud Ceiling Task Group as well as the Technical Committee on Sprinkler System Installation criteria. This information was the basis for the addition of 8.15.24 of the 2016 edition of NFPA 13 [9.2.7 of the 2019 edition]. The full reports for both phases can be found on the Foundation's website: www.nfpa.org/foundation.

[1]Floyd, Jason, and Joshua Dinaburg. July 2013. "Sprinkler Protection for Cloud Ceilings." Quincy, MA: Fire Protection Research Foundation.
[2]Ibid.

Sprinkler Spacing Rule Table for Cloud Skipping

Cloud Size[1] (ft)	*Gap Area Fraction to Ceiling Height (1/ft)*		
	Each Cloud[2]	*Every Other Cloud*	*Every Third Cloud*
Over 10 ft	Up to 1 in./ft		
5 ft to 10 ft	>0.025	< 0.025	
3 ft 4 in. to 5 ft	>0.045	0.03 ≤ gap ≤ 0.045	<0.03
2 ft 6 in. to 3 ft 4 in.	>0.05	0.035 ≤ gap ≤ 0.05	<0.035
Under 2 ft 6 in.	>0.06	0.04 ≤ gap ≤ 0.06	<0.04

[1] Dimension is gap center to gap center based on smaller cloud dimension.
[2] 1 in. of gap/ft of ceiling height was the limit established for large clouds in phase 1.

EDUFIRE.IR

EDUFIRE.IR

Installation Requirements for Standard Pendent, Upright, and Sidewall Spray Sprinklers

CHAPTER

10

REORGANIZATION NOTE

The new Chapter 10 contains the specific requirements for the installation of standard pendent, upright, and sidewall sprinklers that were previously contained in Sections 8.4, 8.6, and 8.7 of the 2016 edition. To avoid redundancy, certain provisions already contained verbatim in the new Chapter 9 have not been repeated in Chapter 10.

N 10.1 General.

Standard pendent, upright, and sidewall sprinklers shall be selected for use and installation as indicated in this chapter and shall be positioned and spaced in accordance with Section 9.5.

Many factors can influence the effectiveness of a standard sprinkler installation, such as the affect that construction and occupancy features have on sprinkler activation, the development of the sprinkler distribution pattern, and the presence of obstructions that could negatively affect or prevent water from reaching the hazard. The criteria found in Chapter 10 address the factors that must be considered for an effective standard sprinkler installation.

10.2 Standard Pendent and Upright Spray Sprinklers.

Section 9.5 address general rules regarding the position, location, spacing, and use of all sprinkler types. Section 10.2 provides additional material specific to standard pendent, upright, and spray sprinklers that might differ from the general guidance provided in Section 9.5.

10.2.1 General. All requirements of Section 9.5 shall apply to standard pendent and upright spray sprinklers except as modified in Section 10.2.

10.2.2 Upright and pendent spray sprinklers shall be permitted in all occupancy hazard classifications and building construction types unless the requirements of 9.3.2 apply.

Subsection 9.3.2 addresses a shallow combustible construction type that has proved to be challenging for standard sprinklers due to their umbrella shaped distribution pattern. In this case, special sprinklers that project water upward and outward have proved to provide better protection.

SEE ALSO

Chapter 15 for additional guidance on special sprinklers.

10.2.3 Quick-response sprinklers shall not be permitted for use in extra hazard occupancies under the density/area design method.

Quick-response sprinklers operate and react to fires faster than standard-response sprinklers. This faster response often results in improved sprinkler system performance where all other factors remain constant.

Extra hazard occupancies are characterized by the probability of fast-developing fires with high heat release rates that have the potential to open a large number of quick-response sprinklers before the sprin-

EDUFIRE.IR

SEE ALSO

B.2.1 for additional information on sprinkler system performance criteria.

klers have time to control the fire. The operation of a large number of sprinklers in a relatively short time period has the potential to overtax the system. For that reason, quick-response sprinklers using the area design method of Chapter 19 are not permitted for the protection of extra hazard occupancies.

10.2.4 Protection Areas per Sprinkler (Standard Pendent and Upright Spray Sprinklers).

10.2.4.1 Determination of Protection Area of Coverage.

10.2.4.1.1 Except as permitted by 10.2.4.1.2, the protection area of coverage per sprinkler (A_s) shall be determined in accordance with 9.5.2.1.

10.2.4.1.2 The requirements of 10.2.4.1.1 shall not apply in a small room as defined in 3.3.196.

FAQ [10.2.4.1.2.1]

Can the requirements of 10.2.4.1.2.1 be applied in all occupancies?

The definition of the term *small room* (see 3.3.196) applies only to light hazard occupancies and also limits the type of ceiling construction and wall openings in addition to the 800 ft² (74 m²) area limitation.

10.2.4.1.2.1 The protection area of coverage for each sprinkler in the small room shall be the area of the room divided by the number of sprinklers in the room.

10.2.4.2 Maximum Protection Area of Coverage.

10.2.4.2.1* The maximum allowable protection area of coverage for a sprinkler (A_s) shall be in accordance with the value indicated in Table 10.2.4.2.1(a) through Table 10.2.4.2.1(d).

The distribution pattern of standard pendent, upright, and sidewall sprinklers maintains its general shape regardless of the hazard. Certain construction types can have a negative influence on sprinkler activation time and increase fire loading from a lesser hazard to a higher hazard, which could necessitate higher water demands. By placing sprinklers closer together, as represented in Table 10.2.4.2.1(a) through 10.2.4.2.1(d), the distribution patterns of two or more adjacent operating sprinklers work together, and the distribution of one sprinkler overlaps that of another aiding in firefighting.

Testing has shown that for sloped combustible ceilings in attic spaces of combustible joist or truss construction with slopes of 4 in 12 or greater, the fire tends to spread up the slope rapidly and involve the roof before sprinklers at the standard spacing permitted under flat roofs can control the fire. The ceiling fire then spreads above the sprinklers, eventually burning a hole in the roof. To improve sprinkler performance, two options are provided by Table 10.2.4.2.1(a): reduce the spacing of the sprinklers in the direction perpendicular to the slope or increase the operating pressure of the sprinkler from 7 psi to 20 psi (0.5 bar to 1.4 bar). The first option brings the sprinklers closer to the fire while using the design pressure of 7 psi (0.5 bar), and the second option improves the distribution and effectiveness of the sprinkler discharge pattern while using the design pressure of 20 psi (1.4 bar).

SEE ALSO

10.2.6.1.4 and its commentary for information on the protection of sloped combustible construction.

TABLE 10.2.4.2.1(a) *Protection Areas and Maximum Spacing of Standard Pendent and Upright Spray Sprinklers for Light Hazard*

		Maximum Protection Area		*Maximum Spacing*	
Construction Type	*System Type*	*ft²*	*m²*	*ft*	*m*
Noncombustible unobstructed	Hydraulically calculated	225	20	15	4.6
Noncombustible unobstructed	Pipe schedule	200	18	15	4.6
Noncombustible obstructed	Hydraulically calculated	225	20	15	4.6
Noncombustible obstructed	Pipe schedule	200	18	15	4.6
Combustible unobstructed with no exposed members	Hydraulically calculated	225	20	15	4.6
Combustible unobstructed with no exposed members	Pipe schedule	200	18	15	4.6
Combustible unobstructed with exposed members 3 ft (910 mm) or more on center	Hydraulically calculated	225	20	15	4.6
Combustible unobstructed with exposed members 3 ft (910 mm) or more on center	Pipe schedule	200	18	15	4.6

EDUFIRE.IR

TABLE 10.2.4.2.1(a) *Continued*

Construction Type	System Type	Maximum Protection Area		Maximum Spacing	
		ft^2	m^2	ft	m
Combustible unobstructed with members less than 3 ft (910 mm) on center	All	130	12	15	4.6
Combustible obstructed with exposed members 3 ft (910 mm) or more on center	All	168	16	15	4.6
Combustible obstructed with members less than 3 ft (910 mm) on center	All	130	12	15	4.6
Combustible concealed spaces in accordance with 10.2.6.1.4	All	120	11	15 parallel to the slope	4.6 parallel to the slope
				10 perpendicular to the slope*	3.0 perpendicular to the slope*

*See 10.2.6.1.4.4.

TABLE 10.2.4.2.1(b) *Protection Areas and Maximum Spacing of Standard Pendent and Upright Spray Sprinklers for Ordinary Hazard*

Construction Type	System Type	Protection Area		Maximum Spacing	
		ft^2	m^2	ft	m
All	All	130	12	15	4.6

TABLE 10.2.4.2.1(c) *Protection Areas and Maximum Spacing of Standard Pendent and Upright Spray Sprinklers for Extra Hazard*

Construction Type	System Type	Protection Area		Maximum Spacing	
		ft^2	m^2	ft	m
All	Pipe schedule	90	8.4	12*	3.7*
All	Hydraulically calculated with density ≥0.25 gpm/ft² (10.2 mm/min)	100	9	12*	3.7*
All	Hydraulically calculated with density <0.25 gpm/ft² (10.2 mm/min)	130	12	15	4.6

*In buildings where solid structural members create bays up to 25 ft (7.6 m) wide, maximum spacing between sprinklers is permitted up to 12 ft 6 in. (3.8 m).

TABLE 10.2.4.2.1(d) *Protection Areas and Maximum Spacing of Standard Pendent and Upright Spray Sprinklers for High-Piled Storage*

Construction Type	System Type	Protection Area		Maximum Spacing	
		ft^2	m^2	ft	m
All	Hydraulically calculated with density ≥ 0.25 gpm/ft² (10.2 mm/min)	100	9	12*	3.7*
All	Hydraulically calculated with density <0.25 gpm/ft² (10.2 mm/min)	130	12	15	4.6

*In buildings where solid structural members create bays up to 25 ft (7.6 m) wide, maximum spacing between sprinklers is permitted up to 12 ft 6 in. (3.8 m).

EDUFIRE.IR

A.10.2.4.2.1 When the spacing between sprinklers perpendicular to the slope exceeds 8 ft (2.4 m), it is necessary to increase the minimum density or sprinkler operating pressure as noted in Table 10.2.4.2.1(a) and in 10.2.6.1.4. Time to sprinkler activation and water distribution can be affected within combustible concealed spaces with sloped roofs or ceilings in these combustible concealed spaces, especially where wood joist rafters or wood truss construction is used. To reduce the probability of fires in these combustible concealed spaces involving the combustible roof or ceiling construction above standard spray sprinklers, more stringent spacing and installation guidelines apply.

10.2.4.2.2 In any case, the maximum area of coverage of a sprinkler shall not exceed 225 ft^2 (20 m^2).

NFPA 13 recognizes that combustible construction can increase the associated fire hazards. Many types of combustible obstructed construction, including wood joists, pre-engineered wood I-beams, and lightweight wood construction such as trusses, can have certain characteristics, including numerous small pockets, a tendency to obstruct heat flow, a greater likelihood for obstructing sprinkler discharge, and an increased susceptibility to fire damage. The protection area per sprinkler is reduced to 130 ft^2 (12 m^2) where the distance between structural members is less than 3 ft (900 mm) apart for these particular types of combustible ceiling construction. Effective sprinkler protection for the areas under these types of combustible ceiling construction is difficult, but not impossible, to provide.

The placement of sprinklers under combustible obstructed construction requires more attention, because obstructed construction, by its very nature, increases the possibility of sprinkler discharge pattern disruption, and the combustible materials can increase the overall fire hazard. If a fire is obstructed from sprinkler discharge and cannot be quickly controlled, the ceiling construction might become part of the fuel package. Once the combustible construction above the sprinkler is involved in the fire, controlling or suppressing the fire with sprinklers is difficult, if not impossible.

Extra hazard occupancies contain large fuel loads that have the potential for developing into fires with very fast and very high rates of heat release. Decreasing allowable areas of coverage to 90 ft^2 (8.4 m^2) for pipe schedule systems and 100 ft^2 (9 m^2) for hydraulically designed systems is intended to compensate for the larger, fast-developing fires that are typical of extra hazard occupancies. For hydraulically designed systems below densities of 0.25 gpm/ft^2 (10.2 mm/min), areas of coverage per sprinkler are permitted to be extended to 130 ft^2 (12 m^2).

For high-piled storage, tests conducted on various commodities can indicate that smaller protection areas per sprinkler are required. Any such criteria identified as part of the design criteria outlined in Chapter 21 or other appropriate NFPA standards need to be followed.

Tables 10.2.4.2.1(c) and 10.2.4.2.1(d) also recognize that in buildings containing extra hazard occupancies or high-piled storage with 25 ft (7.6 m) wide ceiling bays, maximum sprinkler spacing of 12 ft 6 in. (3.8 m) can be employed without compromising the system design integrity. In addition, 15 ft (4.6 m) sprinkler spacing is still acceptable in extra hazard occupancies and high-piled storage for relatively low discharge densities of less than 0.25 gpm/ft^2 (10.2 mm/min).

10.2.5 Sprinkler Spacing (Standard Pendent and Upright Spray Sprinklers).

10.2.5.1 Maximum Distance Between Sprinklers. The maximum distance permitted between sprinklers shall comply with Table 10.2.4.2.1(a) through Table 10.2.4.2.1(d).

10.2.5.2 Maximum Distance from Walls.

10.2.5.2.1 The distance from sprinklers to walls shall not exceed one-half of the allowable distance between sprinklers as indicated in Table 10.2.4.2.1(a) through Table 10.2.4.2.1(d).

10.2.5.2.2* The requirements of 10.2.5.2.1 shall not apply where walls are angled or irregular, and the maximum horizontal distance between a sprinkler and any point of floor area protected by that sprinkler shall not exceed 0.75 times the allowable distance permitted between sprinklers, provided the maximum perpendicular distance is not exceeded.

EDUFIRE.IR

The examples illustrated in Exhibit 10.1 and Exhibit 10.2 demonstrate the requirements for determining the distance of a sprinkler from a wall. If the distance from a branch line to a wall exceeds one-half the distance between the branch lines, twice the distance between the branch line and the wall should be used to determine the maximum allowed distance between sprinklers on branch lines is in accordance with NFPA 13.

More specifically, if the distance from the branch line to the wall is 7 ft (2.1 m), and the distance between branch lines is 13 ft (4.0 m), twice the distance from the branch line to the wall would be 14 ft (4.3 m). The 14 ft (4.3 m) dimension needs to be used to determine the appropriate distance between sprinklers on the branch lines for the first branch line parallel to the wall. Other lines could use the 13 ft or 14 ft (4.0 m or 4.3 m) dimension, depending on whether symmetry is desired. If an ordinary hazard occupancy system with a protection area of 130 ft^2 (12 m^2) per sprinkler is being considered, the maximum distance between sprinklers on the branch lines could be as follows:

$$\frac{130\ \text{ft}^2\ (12.1\ \text{m}^2)}{14\ \text{ft}^2\ (4.3\ \text{m}^2)} = 9.3\ \text{ft}\ (2.8\ \text{m})$$

N **A.10.2.5.2.2** The example in Figure A.10.2.5.2.2 is for a light hazard occupancy. However, the irregular-shaped room allowance also applies to ordinary and extra hazard occupancies.

Angled and other irregular walls and corners with less than 90-degree angles can cause situations in which additional sprinklers are required to protect small spaces within a larger area. For example, in a light hazard occupancy, the distance to the corner in Figure A.10.2.5.2.2 could be increased to 11 ft 3 in. (3.4 m). Another common situation occurs when a window is recessed from the interior wall. Paragraph 10.2.5.2.2 permits the sprinkler to be located farther away from the window as long as the allowable distance from the wall is not exceeded.

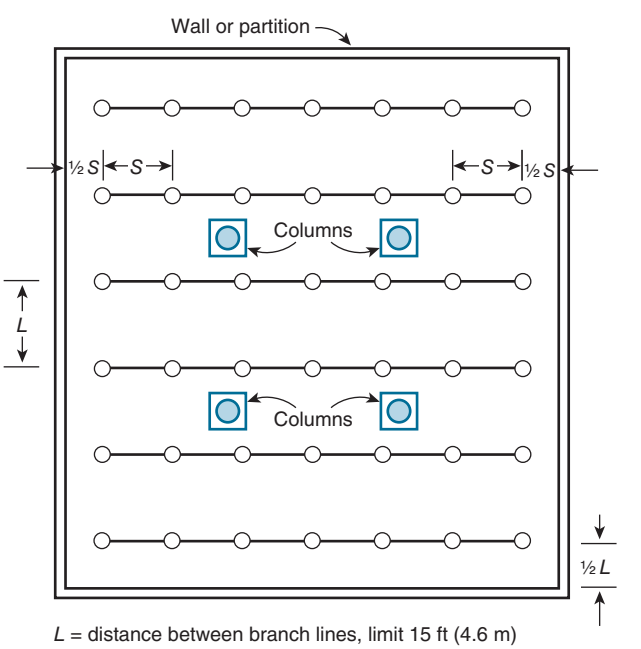

L = distance between branch lines, limit 15 ft (4.6 m)
S = distance between sprinklers on branch lines, limit 15 ft (4.6 m)

EXHIBIT 10.1 *Positioning of Standard Spray Sprinklers Under Flat Slab Concrete Ceiling in Ordinary Hazard Occupancy.*

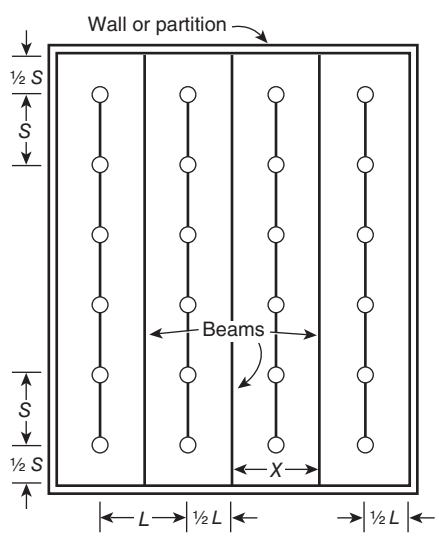

L = distance between branch lines, limit 15 ft (4.6 m)
S = distance between sprinklers on branch lines, limit 15 ft (4.6 m)
X = width of bay

EXHIBIT 10.2 *Positioning of Standard Spray Sprinklers Under Ceiling Consisting of Continuous Smooth Bays with Beams Supported on Columns in Ordinary Hazard Occupancy.*

EDUFIRE.IR

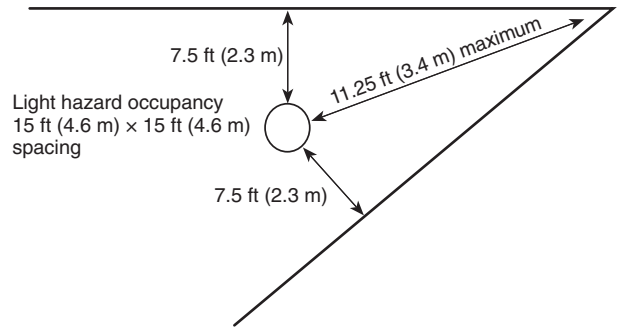

FIGURE A.10.2.5.2.2 *Maximum Distance from Walls.*

10.2.5.2.3* The requirements of 10.2.5.2.1 shall not apply within small rooms as defined in 3.3.196.

A.10.2.5.2.3 Examples of sprinklers in small rooms are shown in Figure A.10.2.5.2.3(a), Figure A.10.2.5.2.3(b), Figure A.10.2.5.2.3(c), and Figure A.10.2.5.2.3(d).

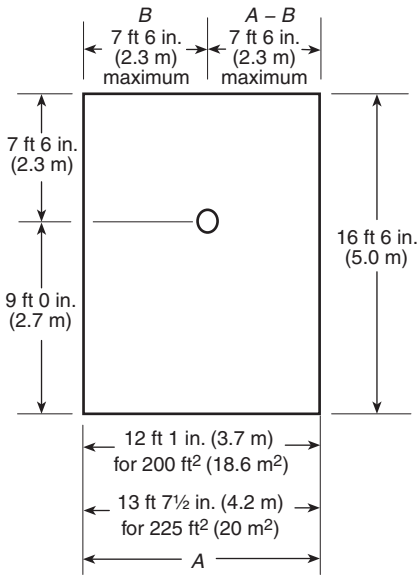

FIGURE A.10.2.5.2.3(a) *Small Room Provision — One Sprinkler.*

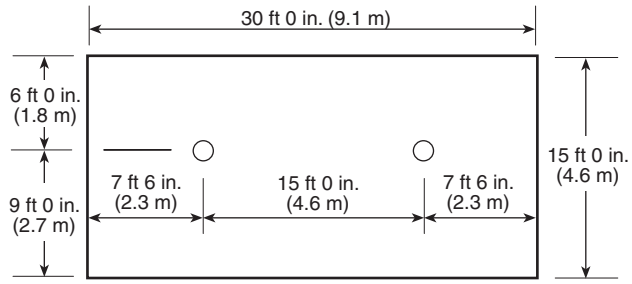

FIGURE A.10.2.5.2.3(b) *Small Room Provision — Two Sprinklers Centered Between Sidewalls.*

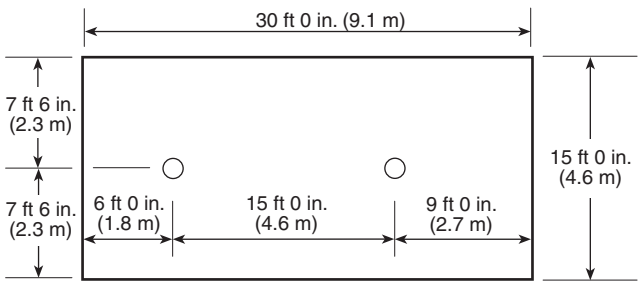

FIGURE A.10.2.5.2.3(c) *Small Room Provision — Two Sprinklers Centered Between Top and Bottom Walls.*

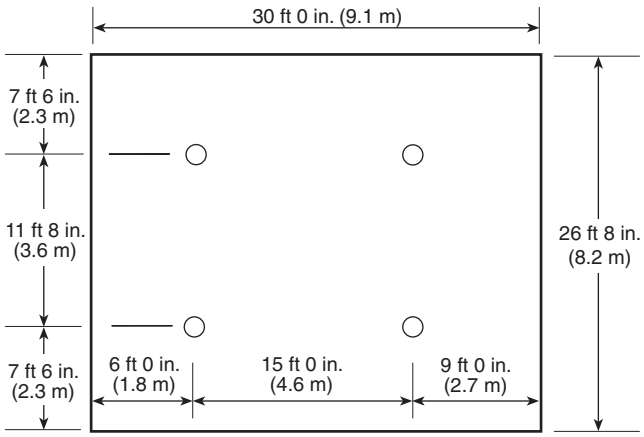

FIGURE A.10.2.5.2.3(d) *Small Room Provision — Four Sprinklers.*

EDUFIRE.IR

10.2.5.2.3.1 Sprinklers shall be permitted to be located not more than 9 ft (2.7 m) from any single wall.

10.2.5.2.3.2 Sprinkler spacing limitations of 10.2.5 and area limitations of Table 10.2.4.2.1(a) shall not be exceeded.

In small, light hazard rooms, spacing sprinklers over 7½ ft (2.3 m) in one direction is permitted, provided that the maximum distance from a single wall is no more than 9 ft (2.7 m). This allows for the accommodation of lighting fixtures, diffusers, and similar obstructions that would otherwise necessitate the need for adding additional sprinklers.

This requirement assumes that only those sprinklers in the room will operate, resulting in a higher available operating pressure and, thus, greater discharge from each sprinkler and an improved spray pattern. See Figure A.10.2.5.2.3(a) through Figure A.10.2.5.2.3(d) for examples of the small room provision.

10.2.5.2.4 Under curved surfaces, the horizontal distance shall be measured at the floor level from the wall, or the intersection of the curved surface and the floor to the nearest sprinkler shall not be greater than one-half the allowable distance between sprinklers.

10.2.5.3 Minimum Distances from Walls. Sprinklers shall be located a minimum of 4 in. (100 mm) from a wall.

10.2.5.4 Minimum Distances Between Sprinklers.

10.2.5.4.1 Unless the requirements of 10.2.5.4.2 or 10.2.5.4.3 are met, sprinklers shall be spaced not less than 6 ft (1.8 m) on center.

10.2.5.4.2 Sprinklers shall be permitted to be placed less than 6 ft (1.8 m) on center where the following conditions are satisfied:

(1) Baffles shall be arranged to protect the actuating elements.
(2) Baffles shall be of solid and rigid material that will stay in place before and during sprinkler operation.
(3) Baffles shall be not less than 8 in. (200 mm) long and 6 in. (150 mm) high.
(4) The tops of baffles shall extend between 2 in. and 3 in. (50 mm and 75 mm) above the deflectors of upright sprinklers.
(5) The bottoms of baffles shall extend downward to a level at least even with the deflectors of pendent sprinklers.

10.2.5.4.3 In-rack sprinklers shall be permitted to be placed less than 6 ft (1.8 m) on center.

In-rack sprinklers are not required to be separated by baffles where installed closer than 6 ft (1.8 m) apart, because they have been tested for these configurations. In-rack sprinklers are located in, or adjacent to, the fire and not at the ceiling where the heat will collect. The lower sprinklers normally operate first and are not usually subjected to the potential of cold soldering.

10.2.6 Deflector Position (Standard Pendent and Upright Spray Sprinklers).

10.2.6.1 Distance Below Ceilings.

10.2.6.1.1 Unobstructed Construction.

10.2.6.1.1.1 Under unobstructed construction, the distance between the sprinkler deflector and the ceiling shall be a minimum of 1 in. (25 mm) and a maximum of 12 in. (300 mm) throughout the area of coverage of the sprinkler.

A minimum of 1 in. (25 mm) of clearance is required to allow for the replacement of upright sprinklers. The rules for positioning sprinklers call for the dimensions to be measured to the sprinkler deflector.

FAQ [10.2.5.3]

Why are standard pendent and upright spray sprinklers required to be installed at least 4 in. (100 mm) from a wall?

NFPA 72®, National Fire Alarm and Signaling Code®, originally addressed this issue for location and positioning of heat and smoke detecting devices. The concern is that a dead-air space could be formed in the corner and that any actuated device installed in the area might have a delayed response. The 4 in. (100 mm) minimum distance from a wall ensures that the sprinkler will operate properly.

FAQ [10.2.5.4.2]

Why are baffles required between closely spaced sprinklers?

Baffles minimize the possibility of "cold soldering," a phenomenon that occurs when the discharge from one sprinkler strikes an adjacent sprinkler's actuating elements and delays or prevents the operation of the adjacent sprinklers. Because recessed and concealed sprinklers have their operating elements at or above the ceiling, they are less likely to be affected by the operation of adjacent sprinklers. However, NFPA 13 does not provide any exception that would permit recessed or concealed sprinklers to be located closer than 6 ft (1.8 m) apart.

EDUFIRE.IR

FAQ [10.2.6.1.1.1]

Are the requirements of 10.2.6.1.1.1 applicable to the area directly above the sprinkler deflector, or are they applicable to the entire area of coverage for the sprinkler?

The intent of the requirement is that the 1 in. to 12 in. (25 mm to 300 mm) limit be applied to the entire area of coverage of the sprinkler.

10.2.6.1.1.2 The requirements of 10.2.6.1.1.1 shall not apply where ceiling-type sprinklers (concealed, recessed, and flush types) have the operating element above the ceiling and the deflector located nearer to the ceiling where installed in accordance with their listing.

Concealed, recessed, and flush type sprinklers should be installed in accordance with their listing. Where sprinklers are listed for installation less than 1 in (25 mm) from the ceiling, that listing is the result of actual laboratory testing. Using the appropriate concealed coverplate or escutcheon is a critical factor in ensuring that sprinklers will operate properly. A concealed coverplate and recessed or flush escutcheon should have a sticker that verifies which sprinkler it is listed with. Paragraph 7.2.6.2 and 7.2.6.3 require escutcheons and coverplates be part of a listed assembly.

10.2.6.1.1.3 The requirements of 10.2.6.1.1.1 shall not apply for light and ordinary hazard occupancies with ceilings of noncombustible or limited-combustible construction where either 10.2.6.1.1.3(A) or 10.2.6.1.1.3(B) applies.

(A) Where a vertical change in ceiling elevation within the area of coverage of the sprinkler creates a distance of more than 36 in. (900 mm) between the upper ceiling and the sprinkler deflector, a vertical plane extending down from the ceiling at the change in elevation shall be considered a wall for the purpose of sprinkler spacing as shown in Figure 10.2.6.1.1.3(A).

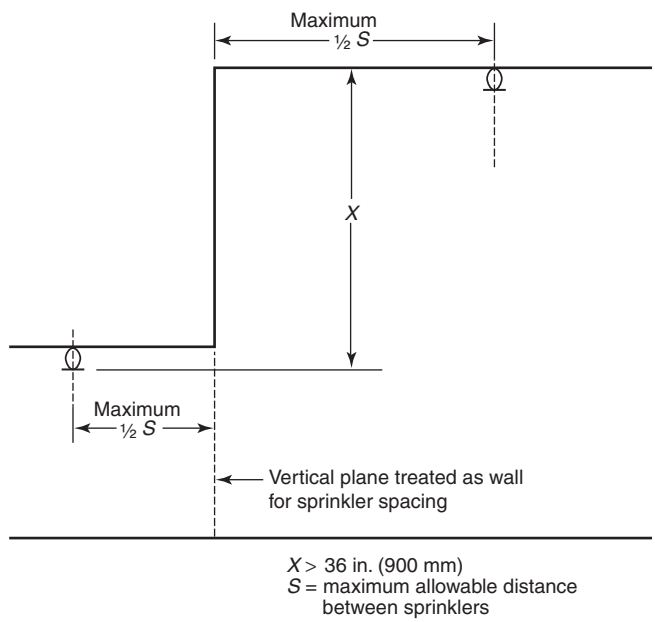

FIGURE 10.2.6.1.1.3(A) *Vertical Change in Ceiling Elevation Greater Than 36 in. (900 mm).*

(B) Where the distance between the upper ceiling and the sprinkler deflector is less than or equal to 36 in. (900 mm), the sprinklers shall be permitted to be spaced as though the ceiling was flat, provided the obstruction rules are observed as shown in Figure 10.2.6.1.1.3(B).

Many architects use irregular ceilings as a design feature. These ceilings might include soffits around the perimeter, pockets for purely decorative purposes, stepped ceilings, and beams in the center to break up the space. Conference facilities at hotels are a good example of where this type of construction is used. These facilities might also have temporary partitions that can be opened and closed to separate a space into two or more individual rooms. Often the ceiling height changes are limited, but in other cases, pockets or elevation changes are quite varied. The placement of sprinklers can be challenging in these spaces if all the rules in NFPA 13 are followed. Additional guidance for ceiling pockets is provided in 10.2.9.

EDUFIRE.IR

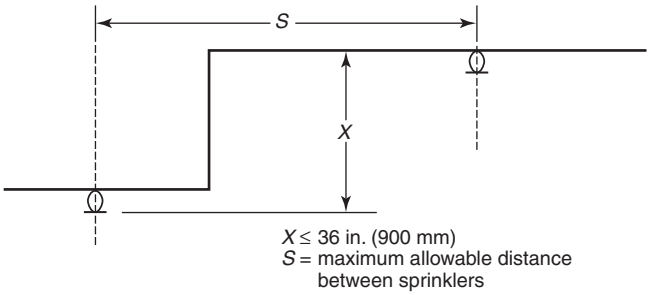

FIGURE 10.2.6.1.1.3(B) *Vertical Change in Ceiling Elevation Less Than or Equal to 36 in. (900 mm).*

If the change in ceiling elevation exceeds 36 in. (900 mm), the change in elevation is treated as a wall, and sprinklers are spaced accordingly. If the change is less than 36 in. (900 mm), the ceiling is assumed to be flat (as long as the upper sprinkler is spaced so that it can discharge underneath the lower ceiling), and the sprinklers are spaced accordingly. If the change in elevation is close enough to the sprinkler located at the ceiling that the sprinkler cannot develop a spray pattern, then the elevation change is treated as an obstruction, and additional sprinklers must be added accordingly [see Figure 10.2.6.1.1.3(A) and Figure 10.2.6.1.1.3(B)]. An important note is that sprinklers are required within the upper ceiling area unless the requirements for unprotected ceiling pockets in 10.2.9 can be met.

10.2.6.1.2 Obstructed Construction. Under obstructed construction, the sprinkler deflector shall be located in accordance with one of the following arrangements:

(1) Installed with the deflectors within the horizontal planes of 1 in. to 6 in. (25 mm to 150 mm) below the structural members and a maximum distance of 22 in. (550 mm) below the ceiling/roof deck

The position of sprinklers under obstructed construction varies widely. A basic series of requirements is set to allow the deflector to be positioned in a number of ways, such as below the structural members in some circumstances, beside the members, in between all the members, or, for concrete joist construction, entirely below the members.

Past substantive changes in NFPA 13 have permitted the sprinkler deflector to be as much as 22 in. (550 mm) below the ceiling for obstructed construction. A 22 in. (550 mm) maximum deflector position for other than concrete tee construction is set in 10.2.6.1.2(1). Positioning the sprinklers more than 22 in. (550 mm) below the ceiling negatively affects sprinkler activation. While 22 in. (550 mm) is the maximum distance, the sprinkler should be placed closer to the ceiling where practical, since the activation time increases as the sprinkler is placed farther down from the deck. The goal is to optimize the sprinkler activation time while minimizing the obstructions to the sprinkler discharge pattern.

Exhibit 10.3 illustrates the placement of upright sprinklers underneath obstructed construction consisting of I-beams in accordance with the base rule of 10.2.6.1.2. If the I-beams had a depth of 10 in. (250 mm), the sprinkler could be placed 1 in. to 6 in. (25 mm to 150 mm) below the bottom of the I-beam, but no more than 11 in. to 16 in. (280 mm to 400 mm) below the ceiling. If the I-beam had a depth of 18 in. (450 mm), another rule influences sprinkler placement. Because the sprinkler cannot be placed more than 22 in. (550 mm) from the ceiling, the sprinkler placement is limited to 1 in. to 4 in. (25 mm to 100 mm) below the I-beam and 19 in. to 22 in. (485 mm to 550 mm) below the ceiling. If the I-beams have a depth of 22 in. (550 mm) or more, the sprinklers must be positioned in accordance with either 10.2.6.1.2(1) or 10.2.6.1.2(2).

Exhibit 10.4 shows the placement of sprinklers under solid wood joist construction in which the joists have a depth of 10 in. (250 mm). The sprinkler could be placed up to 6 in. (150 mm) below the joists, positioning it 16 in. (400 mm) from the ceiling or roof deck. Because sprinklers cannot be positioned more than 1 in. to 6 in. (25 mm to 150 mm) below the structural members, the maximum permitted dimension of 22 in. (550 mm) from the ceiling cannot be applied.

EDUFIRE.IR

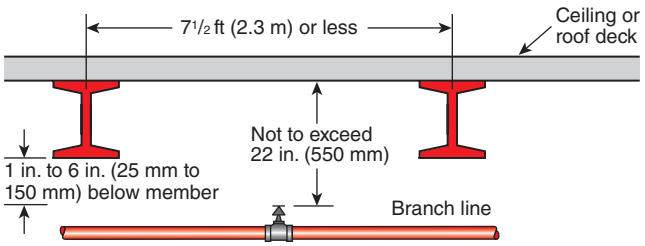

EXHIBIT 10.3 Placement of Standard Spray Upright Sprinklers Underneath Obstructed Construction.

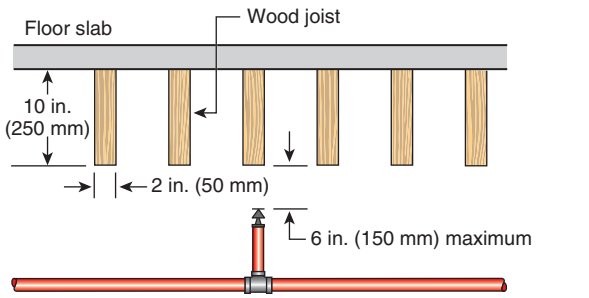

EXHIBIT 10.4 Placement of Standard Spray Upright Sprinklers Underneath Solid Wood Joist Construction.

(2) Installed with the deflectors at or above the bottom of the structural member to a maximum of 22 in. (550 mm) below the ceiling/roof deck where the sprinkler is installed in conformance with 10.2.7.1.2

Item (1) of 10.2.6.1.2 permits sprinkler deflectors to be positioned at or above the bottom of the structural member, provided the distance from the ceiling or roof deck to the deflectors does not exceed 22 in. (550 mm) and the sprinklers are positioned in accordance with the obstruction rules of 10.2.7.1.2. Exhibit 10.5 depicts one such arrangement and illustrates that the sprinkler is positioned within 22 in. (550 mm) of the ceiling to avoid negatively affecting sprinkler activation. In this case, the sprinkler also must be positioned to comply with 10.2.7.1.2 so that the sprinkler discharge will adequately clear the structural members. This rule is typically employed where sprinklers are not installed in each bay of obstructed construction. Item (3) of 10.2.6.1.2 applies where sprinklers need to be installed in each bay of obstructed construction.

EXHIBIT 10.5 Placement of Standard Spray Upright Sprinklers Underneath Obstructed Construction with Sprinkler Deflector Positioned Above Bottom of Structural Member.

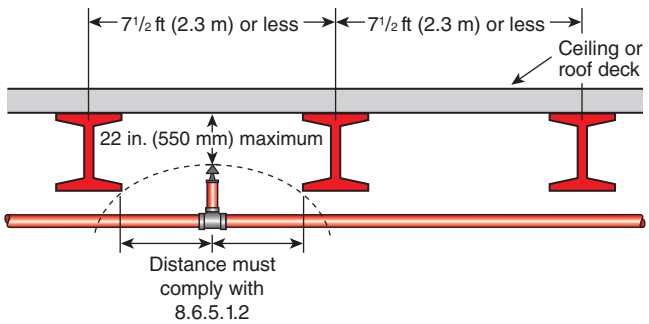

FAQ [10.2.6.1.2(4)]

Are the requirements of 10.2.6.1.2(4) applicable when sprinklers are being installed below composite wood joist construction?

Item (4) of 10.2.6.1.2 identifies the only conditions under which sprinklers can be placed under composite wood joist construction. This requirement clarifies that the distance between the sprinkler deflector and the ceiling cannot exceed 22 in. (550 mm) and that the maximum distance between the sprinkler deflector and the bottom of the joist cannot exceed 6 in. (150 mm).

(3) Installed in each bay of obstructed construction, with the deflectors located a minimum of 1 in. (25 mm) and a maximum of 12 in. (300 mm) below the ceiling

Where the depth of the structural member is of such a dimension that compliance with the obstruction rules of Table 10.2.7.1.2 is not possible, sprinklers must be installed in each bay, and the requirements of 10.2.6.1.2(3) apply. Exhibit 10.6 shows an arrangement of an upright sprinkler located in each bay of obstructed construction.

(4) Installed with the deflectors within the horizontal planes 1 in. to 6 in. (25 mm to 150 mm) below composite wood joists to a maximum distance of 22 in. (550 mm) below the ceiling/roof deck only where joist channels are fire-stopped to the full depth of the joists with material equivalent to the web construction so that individual channel areas do not exceed 300 ft^2 (28 m^2)

EDUFIRE.IR

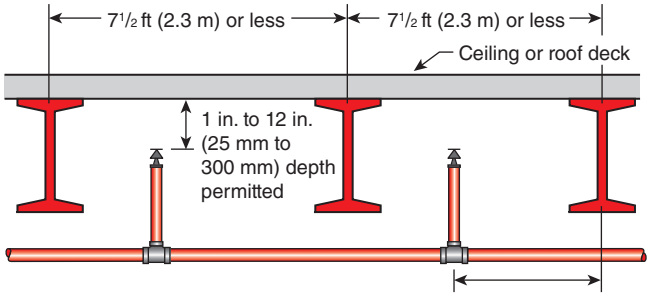

EXHIBIT 10.6 *Placement of Standard Spray Upright Sprinkler in Each Bay of Obstructed Construction.*

(5)* Installed with deflectors of sprinklers under concrete tee construction with stems spaced less than 7½ ft (2.3 m) on centers, regardless of the depth of the tee, located at or above a horizontal plane 1 in. (25 mm) below the bottom of the stems of the tees and complying with Table 10.2.7.1.2

A.10.2.6.1.2(5) For concrete joists spaced less than 3 ft (900 mm) on center, the rules for obstructed construction shown in 10.2.6.1.2 apply. For concrete tee construction with stems spaced less than 7 ft 6 in. (2.3 m) on center, the sprinkler deflector can be located at or above a horizontal plane 1 in. (25 mm) below the bottom of the stems of the tees. This includes sprinklers located between the stems. *[See Figure A.10.2.6.1.2(5).]*

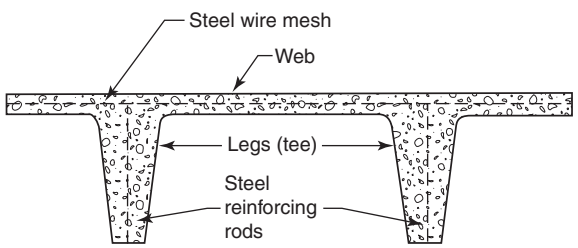

FIGURE A.10.2.6.1.2(5) *Typical Concrete Joist Construction.*

FAQ [10.2.6.1.2(5)]

When can the requirements of 10.2.6.1.2(5) be applied and the sprinkler deflector distance exceed 22 in. (550 mm) from the ceiling or roof deck?

Item (5) of 10.2.6.1.2 applies only to specific types of concrete tee construction. The sprinkler is to be located as high as possible, taking into account the obstruction that could be created by the leg of the concrete tee. The allowance for this special condition is based on sensitivity tests conducted by the sprinkler industry. Concrete has a comparatively high threshold for withstanding heat from fire. Concrete also has the capacity to act as a heat sink, collecting heat from the fire and creating a ceiling effect. This reaction ensures timely operation of the sprinkler.

10.2.6.1.3 Peaked Roofs and Ceilings.

10.2.6.1.3.1 Unless the requirements of 10.2.6.1.3.2 or 10.2.6.1.3.3 are met, sprinklers under or near the peak of a roof or ceiling shall have deflectors located not more than 36 in. (900 mm) vertically down from the peak as indicated in Figure 10.2.6.1.3.1(a) and Figure 10.2.6.1.3.1(b).

10.2.6.1.3.2* Under saw-toothed roofs, sprinklers at the highest elevation shall not exceed a distance of 36 in. (900 mm) measured down the slope from the peak.

A.10.2.6.1.3.2 Saw-toothed roofs have regularly spaced monitors of saw tooth shape, with the nearly vertical side glazed and usually arranged for venting. Sprinkler placement is limited to a maximum of 3 ft (900 mm) down the slope from the peak because of the effect of venting on sprinkler sensitivity.

EDUFIRE.IR

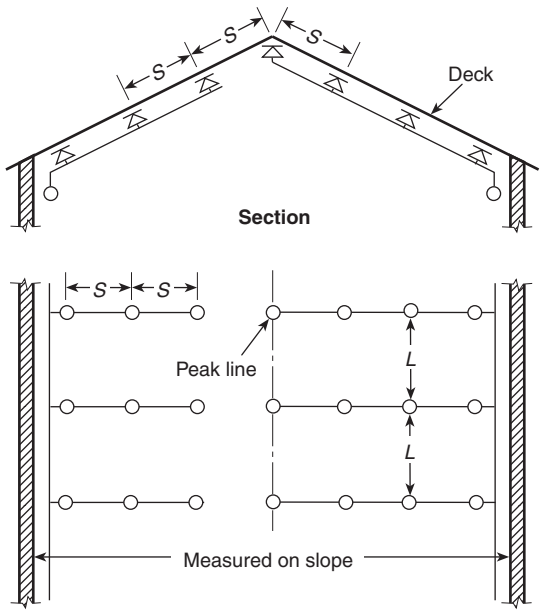

FIGURE 10.2.6.1.3.1(a) Sprinklers Under Pitched Roof with Sprinkler Directly Under Peak; Branch Lines Run Up Slopes.

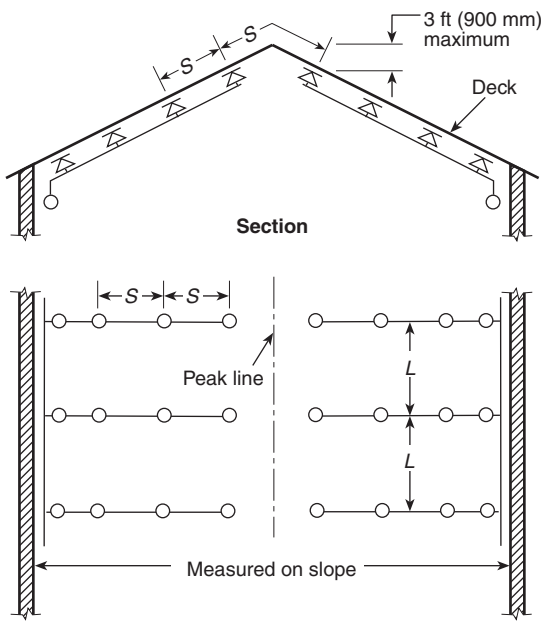

FIGURE 10.2.6.1.3.1(b) Sprinklers at Pitched Roof; Branch Lines Run Up Slopes.

FAQ [10.2.6.1.4]

Why were the requirements for sloped combustible concealed spaces added?

As noted in the commentary following 10.2.4.2.1, fire testing has demonstrated the reduced effectiveness of spray sprinklers in some steeply sloped (slope of 4 in 12 or greater) combustible concealed spaces. In addition to the sprinkler spacing and operating requirements of 10.2.4.2.1, the three additional requirements in 10.2.6.1.4.1, 10.2.6.1.4.2, and 10.2.6.1.4.3 are intended to improve performance.

10.2.6.1.3.3* Under a steeply pitched surface, the distance from the peak to the deflectors shall be permitted to be increased to maintain a horizontal clearance of not less than 24 in. (600 mm) from other structural members as indicated in Figure 10.2.6.1.3.3.

Sprinklers must be within 36 in. (900 mm) vertically of the peak but must also meet the position requirements of 10.2.6.1. The 36 in. (900 mm) limitation addresses the concern that heat from a fire tends to collect at the peak. Locating sprinklers too far below the peak can delay their activation time. If the roof is steeply pitched, raising the sprinkler to improve responsiveness compromises the sprinkler spray pattern. A minimum 24 in. (600 mm) horizontal clearance is required in this case.

A.10.2.6.1.3.3 Generally, where applying the requirements of this section, a surface having a slope greater than or equal to 18 in 12 is needed.

10.2.6.1.4 Sprinklers under a roof or ceiling in combustible concealed spaces of wood joist or wood truss construction with members less than 3 ft (900 mm) on center with a slope having a pitch of 4 in 12 or greater shall be positioned in accordance with Figure 10.2.6.1.4 and the requirements of 10.2.6.1.4.1 through 10.2.6.1.4.6.

FAQ [10.2.6.1.4.2]

Why is a row of sprinklers required so close to the peak?

A line of sprinklers is required within 12 in. (300 mm) horizontally of the peak and within 1 in. to 12 in. (25 mm to 300 mm) down from the peak. The heat traveling up the slope will collect at the peak, and by locating a sprinkler at the peak, the intent is that the sprinkler will open early in the development of the fire and help limit the travel of the heat along the peak away from the fire.

10.2.6.1.4.1 Sprinklers shall be quick-response.

Quick-response sprinklers are required to optimize operation time and performance with the goal of attacking the fire as quickly as possible while it remains small and before the combustible ceiling construction becomes significantly involved, which would allow the fire to spread above the sprinklers.

10.2.6.1.4.2 Sprinklers shall be installed so that a row of sprinklers is installed within 12 in. (300 mm) horizontally of the peak and between 1 in. and 12 in. (25 mm and 300 mm) down from the bottom of the top chord member.

EDUFIRE.IR

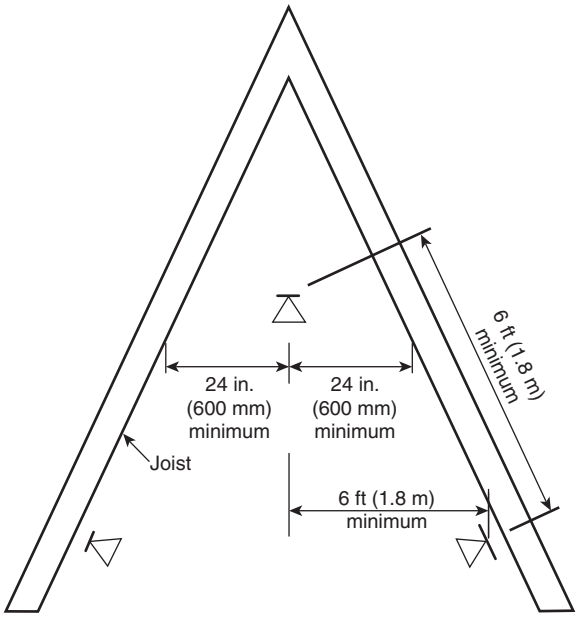

FIGURE 10.2.6.1.3.3 *Horizontal Clearance for Sprinkler at Peak of Pitched Roof.*

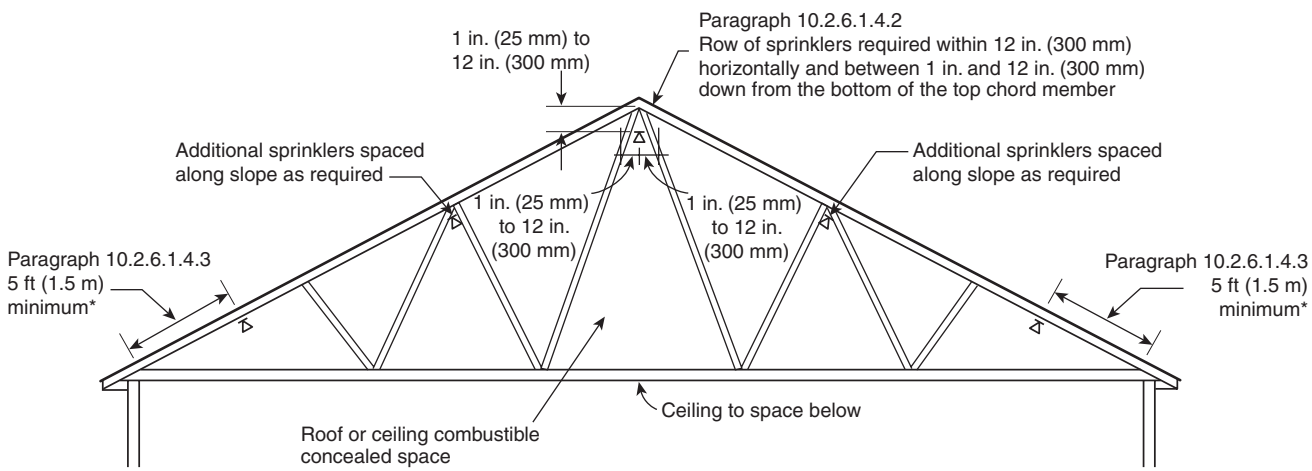

*The 5 ft minimum dimension is measured from the intersection of the upper and lower truss chords or the wood rafters and ceiling joists.

FIGURE 10.2.6.1.4 *Sprinklers Under Roof or Ceiling in Combustible Concealed Spaces of Wood Joist or Wood Truss Construction with Members Less Than 3 ft (900 mm) on Center with a Slope Having a Pitch of 4 in 12 or Greater.*

10.2.6.1.4.3* Sprinklers shall be installed so that the sprinklers installed along the eave are located not less than 5 ft (1.5 m) from the intersection of the upper and lower truss chords or the wood rafters and ceiling joists.

A.10.2.6.1.4.3 Attic width and sprinkler spacing should be measured from the point of intersection between the bottom of the top cord of the roof joist or truss and the top of the ceiling joist or noncombustible insulation. *(See Figure A.10.2.6.1.4.3.)*

EDUFIRE.IR

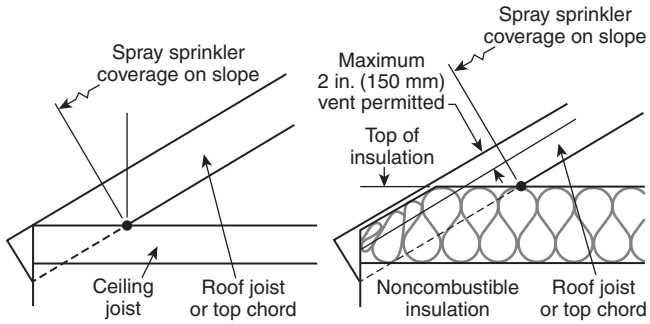

FIGURE A.10.2.6.1.4.3 *Attic Width and Sprinkler Spacing Measurements.*

10.2.6.1.4.4* Sprinklers installed where the dimension perpendicular to the slope exceeds 8 ft (2.4 m) shall have a minimum pressure of 20 psi (1.4 bar).

Combustible concealed spaces of wood joist or wood truss construction with members 36 in. (900 mm) or less on center in conjunction with a steeply pitched slope require increased sprinkler discharge pressure from standard spray sprinklers and fast-response elements, so that the sprinklers operate promptly and have a chance of attacking the fire before it spreads up the slope.

A.10.2.6.1.4.4 See Figure A.10.2.6.1.4.4.

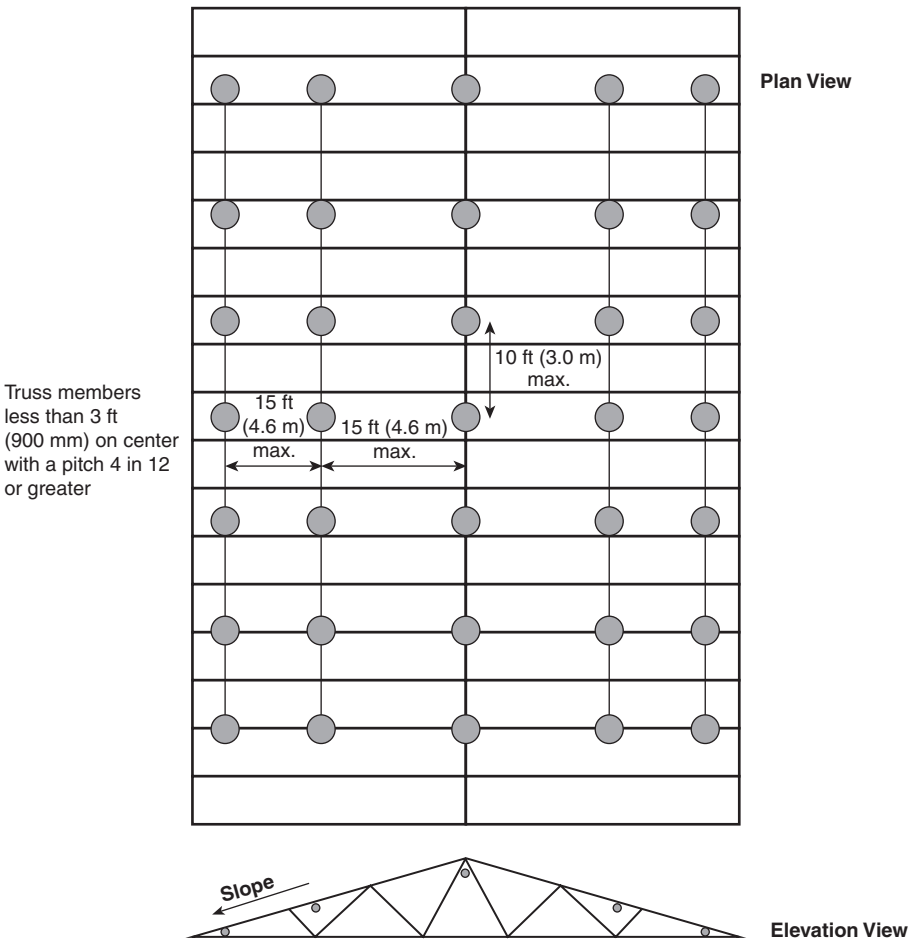

FIGURE A.10.2.6.1.4.4 *Protection Area and Maximum Spacing of Sprinklers Under Sloped Roof.*

EDUFIRE.IR

10.2.6.1.4.5* The requirements of 10.2.6.1.4.3 or 10.2.6.1.4.4 shall not apply to sprinklers installed at the corner of the eave of a hip type roof where located directly under the hip line spaced in accordance with 10.2.5.2.2 or located on the slope plane not less than 5 ft (1.5 m) from the intersection of the upper and lower truss chords or the wood rafters and ceiling joists on the eave and no more than 5 ft (1.5 m) from the hip line.

A.10.2.6.1.4.5 See Figure A.10.2.6.1.4.5.

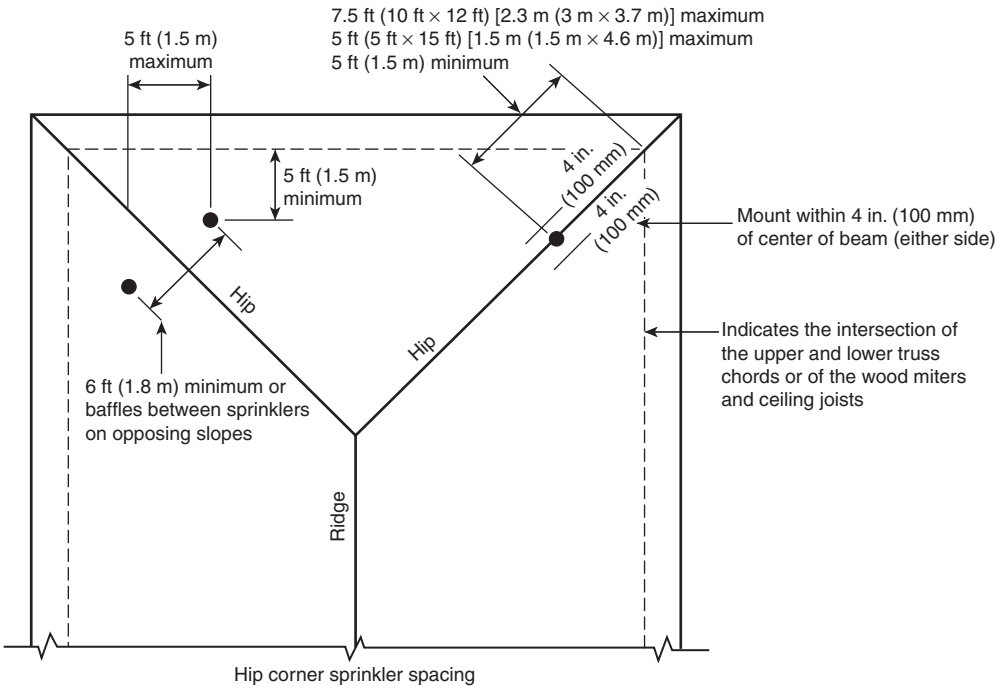

FIGURE A.10.2.6.1.4.5 Hip Roof Installations.

10.2.6.1.4.6 The special requirements of 10.2.4.2.1 and 10.2.6.1.4 shall not apply when the exposed combustible sheathing in the roof or ceiling space are constructed of pressure impregnated fire retardant–treated wood as defined by NFPA 703.

10.2.6.1.5 Double Joist Obstructions.

10.2.6.1.5.1 Unless the requirements of 10.2.6.1.5.2 are met, where two sets of joists are under a roof or ceiling, and no flooring is over the lower set, sprinklers shall be installed above and below the lower set of joists where a clearance of 6 in. (150 mm) or more is between the top of the lower joist and the bottom of the upper joist as indicated in Figure 10.2.6.1.5.1.

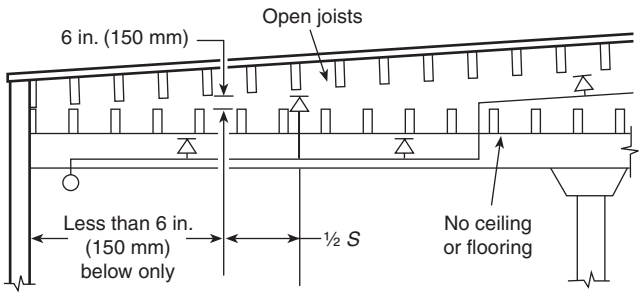

FIGURE 10.2.6.1.5.1 Arrangement of Sprinklers Under Two Sets of Open Joists — No Sheathing on Lower Joists.

FAQ [10.2.6.1.5]

Does the requirement of 10.2.6.1.5 apply to wood truss construction?

Paragraph 10.2.6.1.5 applies only to joist construction, such as solid sawn wood joists or composite wood joists, and does not apply to wood truss construction. For the spacing of sprinklers within wood truss construction, sprinklers should be spaced from the end of the truss.

EDUFIRE.IR

10.2.6.1.5.2 Sprinklers shall be permitted to be omitted from below the lower set of joists where at least 18 in. (450 mm) is maintained between the sprinkler deflector and the top of the lower joist.

10.2.6.2 Deflector Orientation.

10.2.6.2.1 Unless the requirements of 10.2.6.2.2 or 10.2.6.2.3 are met, deflectors of sprinklers shall be aligned parallel to ceilings, roofs, hips, or the incline of stairs.

10.2.6.2.2 Where sprinklers are installed in the peak below a sloped ceiling or roof surface, the sprinkler shall be installed with the deflector horizontal.

10.2.6.2.3 Roofs having a pitch not exceeding 2 in 12 (16.7 percent) are considered horizontal in the application of 10.2.6.2, and sprinklers shall be permitted to be installed with deflectors horizontal.

10.2.7 Obstructions to Sprinkler Discharge (Standard Pendent and Upright Spray Sprinklers).

10.2.7.1 Performance Objective.

10.2.7.1.1 Sprinklers shall be located so as to minimize obstructions to discharge as defined in 10.2.7.2 and 10.2.7.3, or additional sprinklers shall be provided to ensure adequate coverage of the hazard.

10.2.7.1.2* Sprinklers shall be arranged to comply with one of the following arrangements:

(1) Subsection 9.5.5.2, Table 10.2.7.1.2, and Figure 10.2.7.1.2(a) shall be followed.
(2) Sprinklers shall be permitted to be spaced on opposite sides of obstructions not exceeding 4 ft (1.2 m) in width, provided the distance from the centerline of the obstruction to the sprinklers does not exceed one-half the allowable distance permitted between sprinklers.

When applying 10.2.7.1.2(2), the maximum spacing permitted between branch lines and between sprinklers on branch lines must still be followed. Therefore, the distance between sprinklers on opposite sides of the obstruction is measured from the centerline of the obstruction.

FAQ [10.2.7.1.2(3)]

Do the requirements of 10.2.7.1.2 (3) apply to building elements other than soffits?

Item (3) of 10.2.7.1.2 also applies to building elements other than soffits located against a wall, such as cable trays, ductwork, cabinets, or similar small projections attached to a wall.

(3) Obstructions located against the wall and that are not over 30 in. (750 mm) in width shall be permitted to be protected in accordance with Figure 10.2.7.1.2(b).

Item (3) of 10.2.7.1.2 and Figure 10.2.7.1.2(b) identify the conditions under which sprinklers are not required underneath soffits and other similar building features located against a wall. In other words, 10.2.7.1.2(3) identifies where soffits do not present an obstruction to sprinkler discharge. If the obstruction is not more than 30 in. (750 mm) in width, and if the sprinklers are positioned in front of the obstruction, as shown in Figure 10.2.7.1.2(b), additional sprinklers under the soffit can be omitted.

(4) Obstructions located against the wall and that are not over 24 in. (600 mm) in width shall be permitted to be protected in accordance with Figure 10.2.7.1.2(c). The maximum distance between the sprinkler and the wall shall be measured from the sprinkler to the wall behind the obstruction and not to the face of the obstruction.

Many situations in construction exist where soffits might actually be built out many feet below the sprinklers. A common example is a plant shelf. The intent of 10.2.7.1.2 is not to apply the soffit rule in such cases, which would result in sprinklers being installed beneath the features.

The distances specified in Table 10.2.7.1.2 outline the discharge pattern of the sprinkler and define how far away from a building element a sprinkler must be positioned to allow the sprinkler discharge to extend underneath the building element rather than to hit it. These distances are based on the discharge patterns of typical standard spray upright and pendent sprinklers at pressures from 15 psi to 100 psi (1 bar to 7 bar).

EDUFIRE.IR

TABLE 10.2.7.1.2 *Positioning of Sprinklers to Avoid Obstructions to Discharge [Standard Spray Upright/Standard Spray Pendent (SSU/SSP)]*

Distance from Sprinklers to Side of Obstruction (A)	***Maximum Allowable Distance of Deflector Above Bottom of Obstruction (B) [in. (mm)]***
Less than 1 ft (300 mm)	0 (0)
1 ft (300 mm) to less than 1 ft 6 in. (450 mm)	2½ (65)
1 ft 6 in. (450 mm) to less than 2 ft (600 mm)	3½ (90)
2 ft (600 mm) to less than 2 ft 6 in. (750 mm)	5½ (140)
2 ft 6 (750 mm) in. to less than 3 ft (900 mm)	7½ (190)
3 ft (900 mm) to less than 3 ft 6 in. (1.1 m)	9½ (240)
3 ft 6 in. (1.1 m) to less than 4 ft (1.2 m)	12 (300)
4 ft (1.2 m) to less than 4 ft 6 in. (1.4 m)	14 (350)
4 ft 6 in. (1.4 m) to less than 5 ft (1.5 m)	16½ (415)
5 ft (1.5 m) to less than 5 ft 6 in. (1.7 m)	18 (450)
5 ft 6 in. (1.7 m) to less than 6 ft (1.8 m)	20 (500)
6 ft (1.8 m) to less than 6 ft 6 in. (2.0 m)	24 (600)
6 ft 6 in. (2.0 m) to less than 7 ft (2.1 m)	30 (750)
7 ft (2.1 m) to less than 7 ft 6 in. (2.3 m)	35 (875)

For SI units, 1 in. = 25.4 mm; 1 ft = 0.3048 m.

Note: For *A* and *B*, refer to Figure 10.2.7.1.2(a).

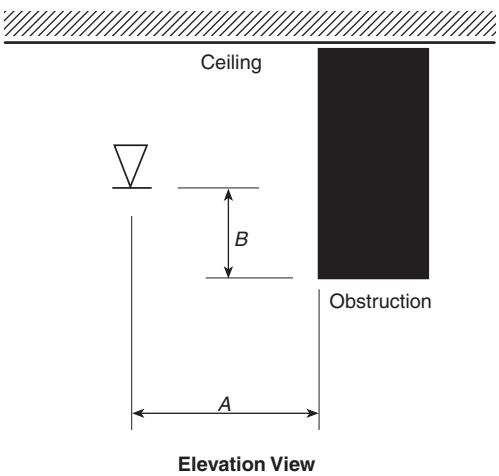

FIGURE 10.2.7.1.2(a) *Positioning of Sprinkler to Avoid Obstruction to Discharge (SSU/SSP)*

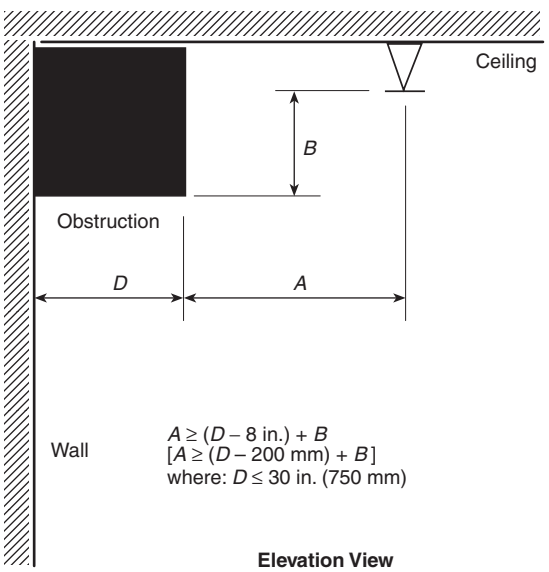

FIGURE 10.2.7.1.2(b) *Obstruction Against Wall (SSU/SSP).*

EDUFIRE.IR

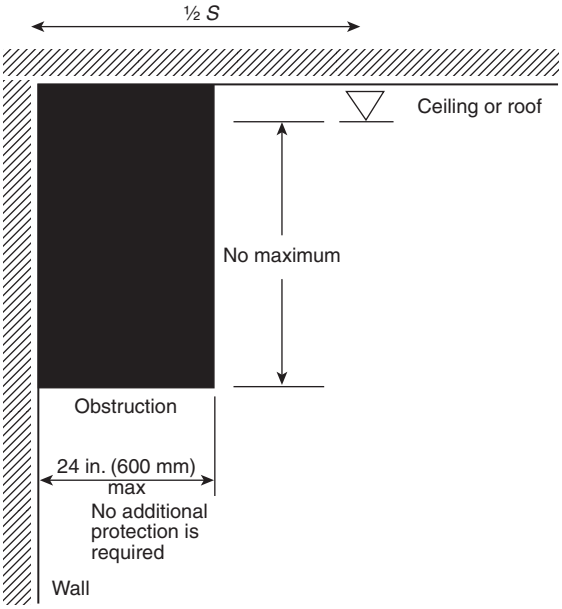

FIGURE 10.2.7.1.2(c) *Obstructions Against Walls (SSU/SSP).*

A.10.2.7.1.2 The intent of 10.2.7.1.2(3) is to apply to soffits that are located within the 18 in. (450 mm) plane from the sprinkler deflector. A soffit or other obstruction (i.e., shelf) located against a wall that is located entirely below the 18 in. (450 mm) plane from the sprinkler deflector should be in accordance with 10.2.7.3.2. *(See Figure A.10.2.7.1.2.)*

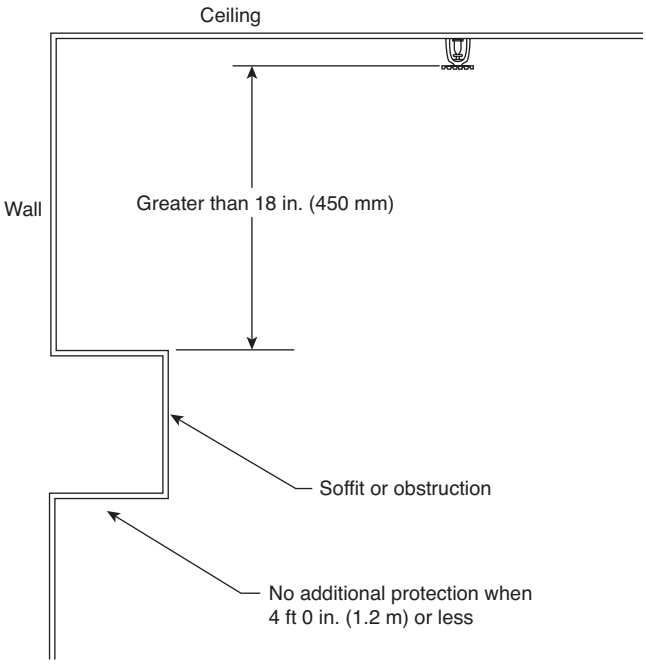

FIGURE A.10.2.7.1.2 *Soffit/Obstruction Against Wall Greater Than 18 in. (450 mm) Below Deflector.*

EDUFIRE.IR

10.2.7.2 Obstructions to Sprinkler Discharge Pattern Development.

10.2.7.2.1 General.

When sprinklers are being installed in unobstructed construction containing noncontinuous obstructions, such as building columns, bar joists, or some truss configurations, adequate horizontal and vertical clearances from the obstruction are critical to maintain proper sprinkler discharge patterns. These clearances are especially critical where the obstructions are structural members that affect each line of sprinklers. Bar joists, trusses, and similar construction types do not impede heat flow, but they are capable of obstructing the sprinkler's spray pattern once the sprinkler is in operation. Exhibit 10.7 shows a standard spray upright sprinkler positioned near bar joist construction. The sprinkler in Exhibit 10.7 must be positioned an adequate distance from the horizontal and vertical members of the bar joist.

EXHIBIT 10.7 *Standard Spray Upright Sprinkler Positioned Near Bar Joist Construction.*

10.2.7.2.1.1 Continuous or noncontinuous obstructions less than or equal to 18 in. (450 mm) below the sprinkler deflector that prevent the pattern from fully developing shall comply with 10.2.7.2.

10.2.7.2.1.2 Regardless of the rules of 10.2.7.2, solid continuous obstructions, where the top of the obstruction is level with or above the plane of the deflector, shall meet the applicable requirements of 10.2.7.1.2.

Large, solid continuous obstructions were previously referred to as horizontal obstructions. These obstructions, such as deep beams or a large duct mounted on or very near the ceiling, significantly affect discharge patterns and must be located above the sprinkler discharge pattern in accordance with 10.2.7.2.1.2. Smaller continuous obstructions, such as pipes and bottom members of trusses, and noncontinuous obstructions, such as the web members of bar joists located within 18 in. (450 mm) below the sprinkler, should be in compliance with the requirements of 10.2.7.2.1.1.

10.2.7.2.1.3* Minimum Distance from Obstructions.

Unless the requirements of 10.2.7.2.1.4 through 10.2.7.2.1.9 are met, sprinklers shall be positioned away from obstructions a minimum distance of three times the maximum dimension of the obstruction (e.g., structural members, pipe, columns, and fixtures) in accordance with Figure 10.2.7.2.1.3(a) and Figure 10.2.7.2.1.3(b).

(A) The maximum clear distance required shall be 24 in. (600 mm).

(B) The maximum clear distance shall not be applied to obstructions in the vertical orientation (e.g., columns).

EDUFIRE.IR

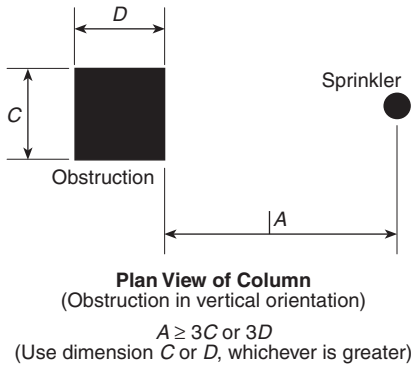

FIGURE 10.2.7.2.1.3(a) *Minimum Distance from an Obstruction in the Vertical Orientation (SSU/SSP).*

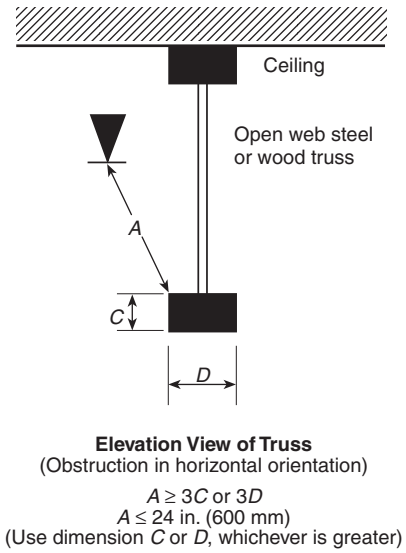

FIGURE 10.2.7.2.1.3(b) *Minimum Distance from an Obstruction in the Horizontal Orientation (SSU/SSP).*

A.10.2.7.2.1.3 The rules of 10.2.7.2.1.3 (known as the "Three Times Rule") have been written to apply to obstructions where the sprinkler can be expected to get water to both sides of the obstruction without allowing a significant dry shadow on the other side of the obstruction. This works for small noncontinuous obstructions and for continuous obstructions where the sprinkler can throw water over and under the obstruction, such as the bottom chord of an open truss or joist. For solid continuous obstructions, such as a beam, the Three Times Rule is ineffective since the sprinkler cannot throw water over and under the obstruction. Sufficient water must be thrown under the obstruction to adequately cover the floor area on the other side of the obstruction. To ensure this, compliance with the rules of 10.2.7.1.2 is necessary.

ASK THE AHJ

Can the authority having jurisdiction require sprinkler positioning adjustments if a sprinkler is up against a 2 ft (0.6 m) wide duct based on the duct being a nonstructural element?

Yes. The exception in 10.2.7.2.1.4 is for the Three Times Rule only, where sprinkler discharge can get over and under structural members. The exception is not intended to apply to situations where sprinklers are completely blocked. Where the sprinkler discharge is blocked, other obstruction rules must be applied.

10.2.7.2.1.4* For light and ordinary hazard occupancies, structural members only shall be considered when applying the requirements of 10.2.7.2.1.3.

Structural members that are obstructions in light and ordinary hazard occupancies must still be considered, because they are easier to locate on building plans than lights and pipes, and because they tend to be continuous, thereby affecting more than one sprinkler in a symmetrical arrangement.

In the 2002 edition, language was added to Annex A to clarify that 10.2.7.2.1.4 does not permit the use of nonstructural elements, including fixtures, and architectural features or treatments that would conceal, obscure, or otherwise obstruct sprinkler discharge. While the intent of 10.2.7.2.1.4 is to exempt nonstructural elements from meeting the Three Times Rule, the requirements of 10.2.7.1.2 and 10.2.7.3.3 still apply and must always be met.

EDUFIRE.IR

A.10.2.7.2.1.4 It is the intent of this section to exempt nonstructural elements in light and ordinary hazard occupancies from the obstruction criteria commonly called the "Three Times Rule." However, the other obstruction rules, including the "Beam Rule" *(see 10.2.7.1.2)* and the "Wide Obstruction Rule" *(see 10.2.7.3.2)*, still apply. If an obstruction is so close to a sprinkler that water cannot spray on both sides, it is effectively a continuous obstruction as far as the sprinkler is concerned and the Beam Rule should be applied.

It is not the intent of this section to permit the use of fixtures and architectural features or treatments to conceal, obscure, or otherwise obstruct sprinkler discharge. The requirement should be applied in accordance with the performance objectives in 10.2.7.1.

10.2.7.2.1.5 Sprinklers shall be permitted to be spaced on opposite sides of the obstruction not exceeding 4 ft (1.2 m) in width, where the distance from the centerline of the obstruction to the sprinklers does not exceed one-half the allowable distance between sprinklers.

10.2.7.2.1.6 Sprinklers shall be permitted to be located one-half the distance between the obstructions where the obstruction consists of open trusses 20 in. (500 mm) or greater apart [24 in. (600 mm) on center], provided that all truss members are not greater than 4 in. (100 mm) (nominal) in width.

When open truss members are closely spaced, it is virtually impossible to locate the sprinkler far enough away from all truss elements that could cause an obstruction. Paragraph 10.2.7.2.1.6 addresses this problem by permitting the installation of sprinklers between the members without requiring adherence to the Three Times Rule, as long as the joists are spaced 24 in. (600 mm) or more apart on center. Exhibit 10.8 illustrates such an arrangement.

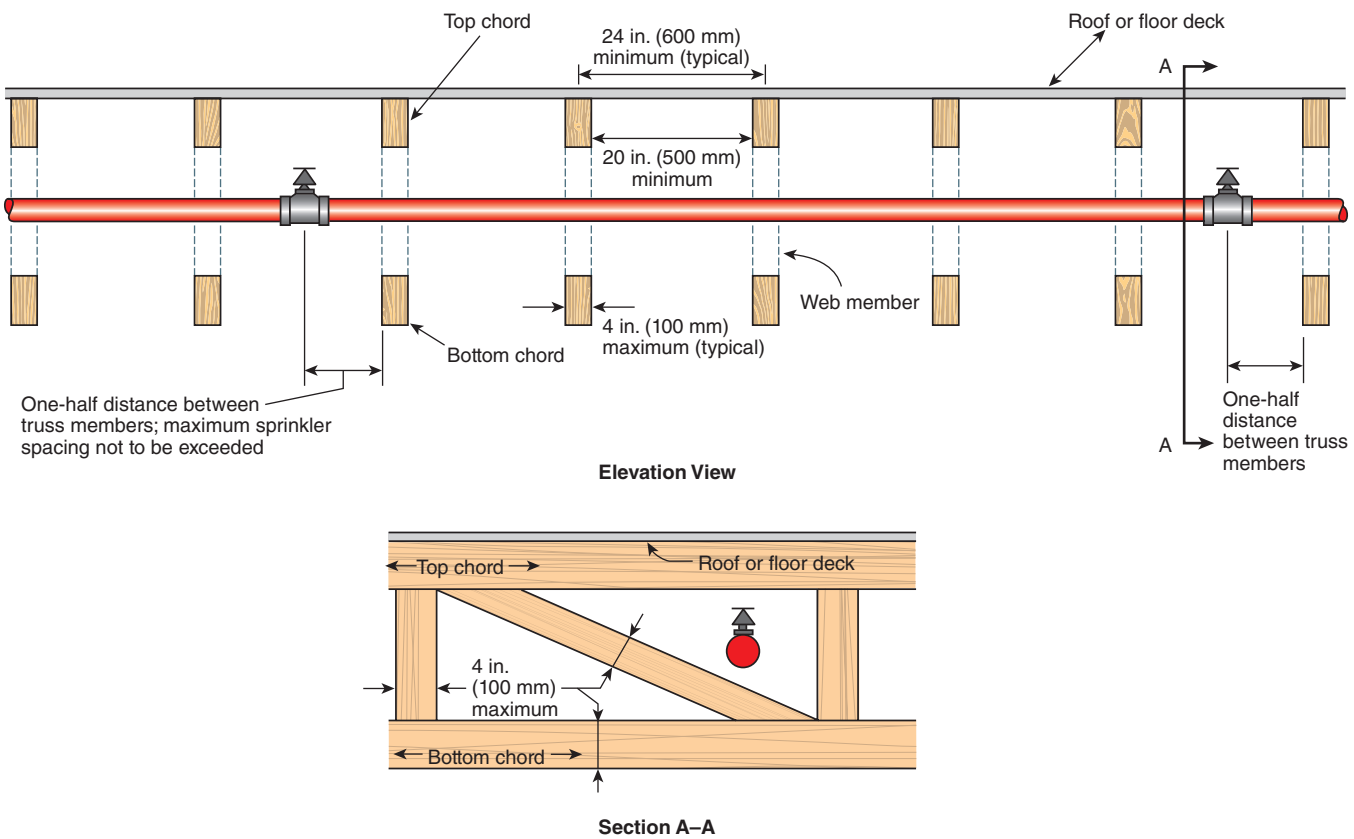

EXHIBIT 10.8 *Location of Sprinklers in Open Truss Construction.*

EDUFIRE.IR

10.2.7.2.1.7 Sprinklers shall be permitted to be installed on the centerline of a truss or bar joist or directly above a beam, provided that the truss chord or beam dimension is not more than 8 in. (200 mm) and the sprinkler deflector is located at least 6 in. (150 mm) above the structural member and where the sprinkler is positioned at a distance three times greater than the maximum dimension of the web members away from the web members.

Paragraph 10.2.7.2.1.7 identifies the conditions under which standard spray upright and pendent sprinklers can be located directly over the centerline of the bottom chord of an open truss, bar joist, or beam without compliance with the Three Times Rule. Under the conditions specified by 10.2.7.2.1.7 and illustrated in Exhibit 10.9, the bottom chord and beams do not present a significant obstruction to sprinkler discharge. However, the vertical and diagonal truss and web members must comply with the Three Times Rule.

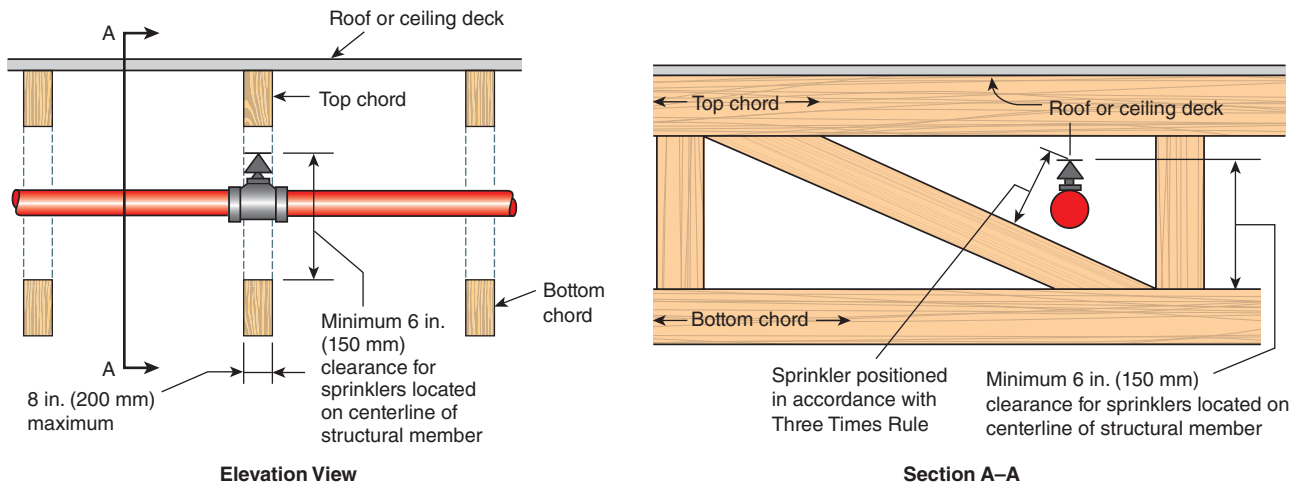

EXHIBIT 10.9 Sprinkler Placed over Centerline of Bottom Chord of Wood Truss in Accordance with 10.2.7.2.1.7.

10.2.7.2.1.8 The requirements of 10.2.7.2.1.3 shall not apply to sprinkler system piping less than 3 in. (80 mm) in diameter.

The pipe on which a sprinkler is installed is not considered a major obstruction, unless the piping is 3 in. (80 mm) or larger. Upright sprinklers on large branch lines or mains must be placed on sprigs or be offset from the branch line to eliminate the obstruction that is created directly below the sprinkler. The elevation of the sprinkler minimizes problems that can occur when a fire is located directly below a sprinkler or directly under the branch line between two sprinklers. The obstruction can prevent the discharge from reaching the fire and can also eliminate dead-air spots that might delay sprinkler actuation, such as when an upright sprinkler is located directly on a 6 in. (150 mm) pipe.

10.2.7.2.1.9 The requirements of 10.2.7.2.1.3 shall not apply to sprinklers positioned with respect to obstructions in accordance with 10.2.7.1.2.

While the Three Times Rule does not apply where a sprinkler can spray under the obstruction and meets the requirements of 10.2.7.1.2, other obstruction rules still apply. The sprinkler's frame arm must be parallel to the branch line (see 9.4.1.3), and the distance between the centerline of an upright sprinkler and a hanger is required to be a minimum of 3 in. (75 mm) (see 17.4.3.3). Exhibit 10.10 shows an upright sprinkler attached directly to a branch line. The sprinkler is free of obstructions from structural ceiling elements, the branch line is less than 3 in. (80 mm) in diameter, the frame arm is parallel to the branch line, and the hanger is located at least 3 in. (80 mm) from the centerline of the sprinkler. However, verification that the sprinkler deflector is properly positioned from the ceiling in accordance with 10.2.6 is needed, depending on whether the ceiling construction is obstructed or unobstructed.

EDUFIRE.IR

EXHIBIT 10.10 Upright Sprinkler Installation. (Courtesy of American Fire Sprinkler Association)

10.2.7.2.1.10* Sprinklers shall be permitted to be placed without regard to the blades of ceiling fans less than 60 in. (1.5 m) in diameter, provided the plan view of the fan is at least 50 percent open.

NFPA 13 provides requirements for small ceiling fans less than 60 in. (1.5 m) in diameter that are commonly used in residential and some commercial occupancies. These requirements are based on distribution testing by the National Fire Sprinkler Association that resulted in guidance being provided in NFPA 13D, *Standard for the Installation of Sprinkler Systems in One- and Two-Family Dwellings and Manufactured Homes,* and NFPA 13R, *Standard for the Installation of Sprinkler Systems in Low-Rise Residential Occupancies,* as well as in NFPA 13, provided that the fans are installed in light hazard occupancies. The fan motor must be considered as an obstruction, but the blades do not have to be considered as long as the area under them is at least 50 percent open. These changes do not apply in ordinary hazard, extra hazard, or storage occupancies, and they also do not apply to high volume low speed fans used in industrial and other occupancies.

A.10.2.7.2.1.10 The housing unit of the ceiling fan is expected to be addressed by the Three Times Rule.

10.2.7.2.2 Suspended or Floor-Mounted Vertical Obstructions. The distance from sprinklers to privacy curtains, freestanding partitions, room dividers, and similar obstructions in light hazard occupancies shall be in accordance with Table 10.2.7.2.2 and Figure 10.2.7.2.2.

***TABLE 10.2.7.2.2** Suspended or Floor-Mounted Obstructions in Light Hazard Occupancies Only (SSU/SSP)*

Horizontal Distance (A)	*Minimum Vertical Distance Below Deflector (B) [in. (mm)]*
6 in. (150 mm) or less	3 (75)
More than 6 in. (150 mm) to 9 in. (225 mm)	4 (100)
More than 9 in. (225 mm) to 12 in. (300 mm)	6 (150)
More than 12 in. (300 mm) to 15 in. (375 mm)	8 (200)
More than 15 in. (375 mm) to 18 in. (450 mm)	9½ (240)
More than 18 in. (450 mm) to 24 in. (600 mm)	12½ (315)
More than 24 in. (600 mm) to 30 in. (750 mm)	15½ (390)
More than 30 in. (750 mm)	18 (450)

For SI units, 1 in. = 25.4 mm.

Note: For *A* and *B*, refer to Figure 10.2.7.2.2.

FAQ [10.2.7.2.2]

Can the requirements of 10.2.7.2.2 and Figure 10.2.7.2.2 be utilized in all occupancies?

The distance requirements of 10.2.7.2.2 and Figure 10.2.7.2.2 should not be applied beyond light hazard occupancies, because the testing reported in the National Institute of Standards and Technology (NIST) [known until 1988 as the National Bureau of Standards (NBS)] publication NBSIR 80–2097, *Full-Scale Fire Tests with Automatic Sprinklers in a Patient Room,* only evaluated sprinkler performance in a light hazard environment. The allowances of 10.2.7.2.2 have been misapplied in the past, so to clarify that the allowances of 10.2.7.2.2 apply to light hazard occupancies only, the titles of Table 10.2.7.2.2 and Figure 10.2.7.2.2 were modified to include "in light hazard occupancies only."

EDUFIRE.IR

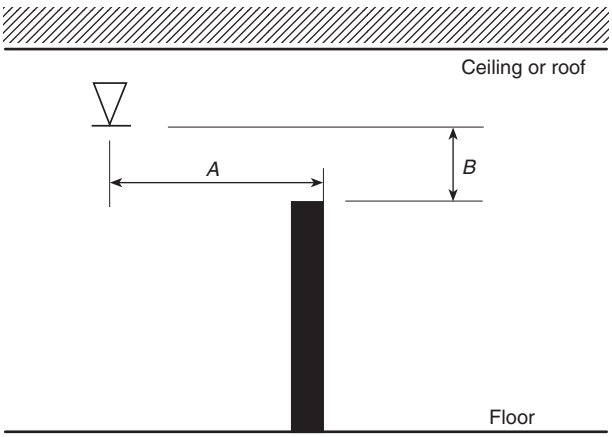

FIGURE 10.2.7.2.2 *Suspended or Floor-Mounted Obstruction in Light Hazard Occupancies Only (SSU/SSP).*

10.2.7.2.2.1* In light hazard occupancies, privacy curtains, as shown in Figure 10.2.7.2.2, shall not be considered obstructions where all of the following are met:

(1) The curtains are supported by fabric mesh on ceiling track.
(2) Openings in the mesh are equal to 70 percent or greater.
(3) The mesh extends a minimum of 22 in. (550 mm) down from ceiling.

Exhibit 10.11 shows an example of privacy curtains used in a health care setting and their relation to sprinklers.

EXHIBIT 10.11 *Example of Health Care Privacy Curtain with Sprinklers: (left) Piece of Mesh Used for Curtains and (right) Mesh Curtain Installed. (Courtesy of Tana-Tex, Inc.)*

EDUFIRE.IR

A.10.2.7.2.2.1 Testing has shown that privacy curtains supported from the ceiling by mesh fabric do not obstruct the distribution pattern in a negative way as long as the mesh is 70 percent or more open and extends from the ceiling a minimum of 22 in. (550 mm).

10.2.7.3* Obstructions that Prevent Sprinkler Discharge from Reaching Hazard.

A.10.2.7.3 See A.9.5.5.3.

10.2.7.3.1 Continuous or noncontinuous obstructions that interrupt the water discharge in a horizontal plane more than 18 in. (450 mm) below the sprinkler deflector in a manner to limit the distribution from reaching the protected hazard shall comply with 10.2.7.3.

Once the sprinkler spray pattern has developed, small obstructions have a limited impact on sprinkler performance. However, larger obstructions located 18 in. (450 mm) or more below the sprinkler deflector prevent the sprinkler discharge from reaching combustibles located below sprinklers. Paragraph 10.2.7.3.1 identifies where additional upright or pendent sprinklers are required to compensate for such types of obstructions.

ASK THE AHJ

Is the authority having jurisdiction correct in requiring that sprinklers be installed to protect beneath a 5 ft (1.5 m) wide conveyor that is 3 ft (0.9 m) off the ground if nothing will be stored below?

Yes. There are no exceptions to the requirements of 10.2.7.3.1 based on the height of the obstruction above the floor. However, if the obstruction is to closer the floor and is noncombustible, 9.5.5.3.1.4 can be applied.

10.2.7.3.2* Sprinklers shall be installed under fixed obstructions over 4 ft (1.2 m) wide.

Open grate floors are often covered by storage or dust stops, creating an obstruction to ceiling sprinklers and resulting in the need to place sprinklers beneath the flooring.

ASK THE AHJ

Should an authority having jurisdiction reject or comment on a proposed fire sprinkler system for a gymnasium where there is no fire sprinkler protection shown under the bleachers?

Yes. Although bleachers are typically movable, they are a permanent part of the space and need to have protection underneath per 9.5.5.3.1 where they are more than 4 ft (1.2 m) wide from the wall when extended. This is similar in nature to an overhead door obstruction mentioned in 10.3.4.1.7.

A.10.2.7.3.2 When obstructions are located more than 18 in. (450 mm) below the sprinkler deflector, an adequate spray pattern develops and obstructions up to and including 4 ft (1.2 m) wide do not require additional protection underneath. Examples are ducts, decks, open grate flooring, catwalks, cutting tables, overhead doors, soffits, ceiling panels, and other similar obstructions.

The width of an object is the lesser of the two horizontal dimensions (with the length being the longer horizontal dimension). Sprinkler protection is not required under objects where the length is greater than 4 ft (1.2 m) and the width is 4 ft (1.2 m) or less.

10.2.7.3.3 Sprinklers installed under open gratings shall be of the intermediate level/rack storage type or otherwise shielded from the discharge of overhead sprinklers.

Shielding is required by 10.2.7.3.3 to prevent cold soldering of the thermal element from the discharge of the overhead sprinkler, resulting in a delay in operation of the sprinkler.

EDUFIRE.IR

10.2.7.3.4 The deflector of automatic sprinklers installed under fixed obstructions shall be positioned no more than 12 in. (300 mm) below the bottom of the obstruction.

10.2.7.3.5 Sprinklers installed under round ducts shall be of the intermediate level/rack storage type or otherwise shielded from the discharge of overhead sprinklers.

10.2.8 Clearance to Storage (Standard Pendent and Upright Spray Sprinklers).

10.2.8.1 The clearance between the deflector and the top of storage shall be 18 in. (450 mm) or greater.

Sprinklers installed near wall-mounted shelves or piled storage located against a wall are not intended to be governed by the requirements of 10.2.8.1 (see Exhibit 10.12, left). The clear space beneath the sprinkler is needed for the spray pattern to fully develop to allow proper wetting of the floor and not the wall (see Exhibit 10.12, right).

EXHIBIT 10.12 Examples of Storage Room Clearances: (left) Room with Storage Against Wall Extending to Ceiling with Sprinklers and (right) Storage Room with Proper Clearance Below Sprinklers.

10.2.8.2 Where other standards specify greater clearance to storage minimums, they shall be followed.

10.2.9 Ceiling Pockets (Standard Pendent and Upright Spray Sprinklers).

10.2.9.1* Except as provided in 10.2.9.2 and 10.2.9.3, sprinklers shall be required in all ceiling pockets.

A.10.2.9.1 Ceiling features in unobstructed construction that are protected by sprinklers in the lower ceiling elevation when the higher ceiling elevation is within 12 in. (300 mm) of the deflectors or greater for sprinklers with greater listed distances from the higher ceiling should not be considered unprotected ceiling pockets.

10.2.9.2 Sprinklers shall not be required in ceiling pockets where all of the following are met:

(1) The total volume of the unprotected ceiling pocket does not exceed 1000 ft^3 (28 m^3).
(2) The depth of the unprotected ceiling pocket does not exceed 36 in. (900 mm).
(3) The entire floor under the unprotected ceiling pocket is protected by sprinklers at the lower ceiling elevation.
(4)* The total size of all unprotected ceiling pockets in the same compartment within 10 ft (3 m) of each other does not exceed 1000 ft^3 (28 m^3).
(5) The unprotected ceiling pocket has noncombustible or limited-combustible finishes.
(6) Quick-response sprinklers are utilized throughout the compartment.

EDUFIRE.IR

Fire modeling was conducted by the American Fire Sprinkler Association (AFSA) to estimate the effect ceiling pockets have on sprinkler response at the lower ceiling elevation and to determine what type of pockets can be left unsprinklered. After a review of the modeling results and field experience, requirements were added to the 2002 edition of NFPA 13 to address ceiling pockets.

Those requirements were modified further in 2010 to address groups of small pockets with a cumulative volume less than 1000 ft³ (28 m³) and to separate the ceiling pocket and skylight requirements. The change provides guidance on the two leading questions regarding ceiling pockets: (1) whether sprinklers are required in pockets less than 12 in. (300 mm) deep, and (2) whether it is necessary to separate small unprotected pockets by more than 10 ft (3 m).

To ensure adequate protection of the space, the following requirements were developed by the Technical Committee on Sprinkler System Installation:

(1) The volume of the pocket must be limited to no more than 1000 ft³ (28 m³) [see 10.2.9.2 (1)], and the depth of the pocket must be limited to 36 in. (900 mm). [See 10.2.9.2 (2).]
(2) The entire floor area must be covered by the discharge of the sprinklers at the lower ceiling [see 10.2.9.2(3)], and quick-response sprinklers must be used throughout the space. [See 10.2.9.2(6).]
(3) The pocket must be of noncombustible or limited-combustible construction. [See 10.2.9.2(5).]
(4) Finally, to ensure that heat collecting from adjacent unprotected ceiling pockets has no impact, a 10 ft (3 m) separation must be maintained between unprotected ceiling pockets. However, groups of smaller ceiling pockets totaling less than 1000 ft³ (28 m³) are permitted to have less than the 10 ft (3 m) separation, provided the entire volume of the ceiling pockets does not exceed 1000 ft³ (28 m³). [See 10.2.9.2(4)]. For additional information on the effect of ceiling pockets on sprinkler activation, see the AFSA report, "Evaluating the Impact of Ceiling Pockets on Sprinkler Activation."

Exhibit 10.13 illustrates the requirements of 10.2.9.2.

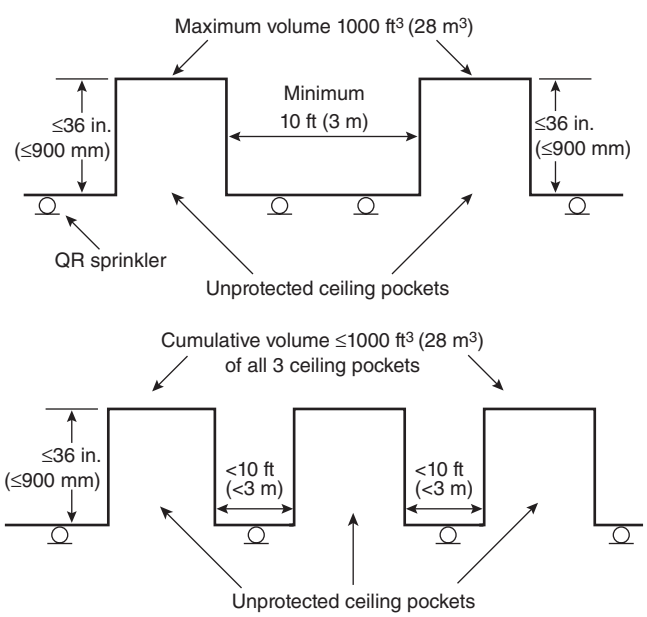

EXHIBIT 10.13 *Two Scenarios Where Unprotected Ceiling Pockets Would Be Permitted.*

A.10.2.9.2(4) It is the intent of this section to allow compartments with multiple pockets, where the cumulative volume of the pockets exceeds 1000 ft³ (28 m³) and separated from each other by 10 ft (3.05 m) or more and still be permitted to be unprotected because with these values, a sprinkler would be required between such pockets. For smaller pockets where the cumulative volume does not exceed 1000 ft³ (28 m³), there is no reason to separate the pockets by any specific distance because they are not worse than a single pocket that is 1000 ft³ (28 m³).

EDUFIRE.IR

10.2.9.3 Sprinklers shall not be required in skylights and similar pockets in accordance with 9.3.16.

Skylights up to 32 ft^2 (3 m^2) in area are covered in 9.3.17. Larger skylights are considered ceiling pockets and must comply with the more restrictive requirements of 10.2.9.

10.3 Sidewall Standard Spray Sprinklers.

Section 9.5 addresses general rules influencing the position, location, spacing, and use of all sprinkler types. Section 10.3 provides additional material specific to standard sidewall spray sprinklers, which might differ from the general guidance provided in Section 9.5.

10.3.1 General. All requirements of Section 9.5 shall apply to sidewall standard spray sprinklers except as modified in Section 10.3.

10.3.2 Sidewall Spray Sprinklers. Sidewall sprinklers shall only be installed as follows:

(1) Light hazard occupancies with smooth, horizontal or sloped, flat ceilings
(2) Ordinary hazard occupancies with smooth, flat ceilings where specifically listed for such use
(3) To protect areas below overhead doors
(4) At the top and bottom of elevator hoistways
(5) For the protection of steel building columns
(6) Under obstructions that require sprinklers

Item (6) of 10.3.2 clarifies that there are locations where the use of a sidewall sprinkler under obstructions can be beneficial. This is common in instances involving large overhead doors, but now similar obstructions can be evaluated in a similar manner.

10.3.3 Protection Areas per Sprinkler (Standard Sidewall Spray Sprinklers).

10.3.3.1 Determination of Protection Area of Coverage.

10.3.3.1.1 The protection area of coverage per sprinkler (A_s) shall be determined as follows:

(1) Along the wall as follows:
  (a) Determine the distance between sprinklers along the wall (or to the end wall or obstruction in the case of the end sprinkler on the branch line) upstream and downstream
  (b) Choose the larger of either twice the distance to the end wall or the distance to the next sprinkler
  (c) Define dimension as S
(2) Across the room as follows:
  (a) Determine the distance from the wall on which the sprinkler is installed to the wall opposite the sprinklers or to the midpoint of the room where sprinklers are installed on two opposite walls *(see 10.3.4.1.5 and 10.3.4.1.6)*
  (b) Define dimension as L

10.3.3.1.2 The protection area of the sprinkler shall be established by multiplying the S dimension by the L dimension, as follows:

$$A_S = S \times L \qquad \textbf{[10.3.3.1.2]}$$

10.3.3.2 Maximum Protection Area of Coverage.

10.3.3.2.1 The maximum allowable protection area of coverage for a sprinkler (A_s) shall be in accordance with the value indicated in Table 10.3.3.2.1.

EDUFIRE.IR

TABLE 10.3.3.2.1 *Protection Areas and Maximum Spacing (Standard Sidewall Spray Sprinkler)*

	Light Hazard		*Ordinary Hazard*	
	Combustible Ceiling Finish	*Noncombustible or Limited- Combustible Ceiling Finish*	*Combustible Ceiling Finish*	*Noncombustible or Limited- Combustible Ceiling Finish*
Maximum distance along the wall *(S)* (ft) [m]	14 [4.3]	14 [4.3]	10 [3.0]	10 [3.0]
Maximum room width *(L)* (ft) [m]	12 [3.7]	14 [4.3]	10 [3.0]	10 [3.0]
Maximum protection area (ft^2) [m^2]	120 [11]	196 [18]	80 [7.4]	100 [9.3]

10.3.3.2.2 In any case, the maximum area of coverage of a sprinkler shall not exceed 196 ft^2 (18 m^2).

Protection areas for sidewall sprinklers differ from those of standard spray upright and pendent sprinklers. Because of the characteristic horizontal or sideways travel of the sprinkler discharge, the water spray pattern of sidewall sprinklers has a greater tendency to be obstructed or otherwise affected by furniture and other objects near the floor. The discharge of standard spray sprinklers is not normally as adversely affected by furniture and other objects on the floor. In addition, the discharge patterns of sidewall spray sprinklers are less uniform than those of standard spray sprinklers.

Table 10.3.3.2.1 indicates the maximum allowable protection areas. Table 10.3.3.2.1 also indicates sprinkler protection areas that are not affected by the building construction above the ceiling. The sprinkler system, if properly designed and installed, is intended to control the fire below the ceiling. Subsection 9.2.1 identifies the concealed spaces above ceilings that are not required to be protected with sprinklers.

10.3.4 Sprinkler Spacing (Standard Sidewall Spray Sprinklers).

10.3.4.1 Maximum Distance Between Sprinklers.

10.3.4.1.1 The maximum distance permitted between sidewall spray sprinklers shall be based on the centerline distance between sprinklers on the branch line.

10.3.4.1.2 The maximum distance between sidewall spray sprinklers or to a wall shall be measured along the slope of the ceiling.

10.3.4.1.3 Where sidewall spray sprinklers are installed along the length of a single wall of rooms or bays, they shall be spaced in accordance with the maximum spacing provisions of Table 10.3.3.2.1.

10.3.4.1.4 Sidewall spray sprinklers shall not be installed back-to-back without being separated by a continuous lintel or soffit.

10.3.4.1.4.1 The maximum width of the lintel or soffit shall not exceed 16 in. (400 mm).

10.3.4.1.4.2 The maximum width of the lintel or soffit can exceed 16 in. (400 mm) when a pendent sprinkler is installed under the lintel or soffit.

FAQ [10.3.4.1.4]

Why are lintels or soffits required for back-to-back installations?

The use of a lintel or soffit is necessary to ensure that the sprinkler closest to the fire operates and to minimize the possibility of sprinklers on both sides of the lintel operating unnecessarily. The baffle also serves to prevent the discharge pattern of the operating sprinkler from impinging on the operating element of an adjacent sprinkler. The baffle is an important feature because sidewall sprinklers are actually designed to discharge a portion of their spray pattern behind the sprinkler.

EDUFIRE.IR

10.3.4.1.5 Where sidewall spray sprinklers are installed on two opposite walls or sides of bays, the maximum width of the room or bay shall be permitted to be up to 24 ft (7.3 m) for light hazard occupancy or 20 ft (6.1 m) for ordinary hazard occupancy, with spacing as required by Table 10.3.3.2.1.

Due to the spacing limitations of sidewall sprinklers, only certain size rooms can be effectively protected. Paragraph 10.3.4.1.5 permits sidewall sprinklers to be used in larger rooms under certain conditions, including a maximum room width dimension and the use of two lines of sprinklers on opposite walls. Extended coverage sidewall sprinklers provide better coverage for wide rooms and should be used for rooms over 24 ft (7.3 m) wide.

10.3.4.1.6 Sidewall spray sprinklers shall be permitted to be installed on opposing or adjacent walls, provided no sprinkler is located within the maximum protection area of another sprinkler.

Testing has determined the minimum required distance to prevent cold soldering from an adjacent sidewall sprinkler where both sprinklers are located along the same wall. However, no testing has been done to determine the minimum distance where sprinklers are located on opposite or adjacent walls (see 10.3.4.1.6). Placing sidewall sprinklers outside the protection area of the adjacent sprinklers is probably conservative, but it eliminates the potential for the discharge from one sprinkler wetting the thermal element of another.

10.3.4.1.7 Where sidewall standard spray sprinklers are installed to protect areas below overhead doors within ordinary hazard occupancy spaces or rooms, protection area and maximum sprinkler spacing for light hazard as specified in Table 10.3.3.2.1 shall be permitted under the overhead doors.

Sprinkler protection is required under overhead doors so that protection is provided when the doors are open and the ceiling sprinklers are obstructed. In ordinary hazard areas, this provision permits larger doors to be protected by a single sidewall sprinkler, reducing the installation costs while not significantly affecting the protection of the space.

10.3.4.2 Maximum Distance from Walls. The distance from sprinklers to the end walls shall not exceed one-half of the allowable distance permitted between sprinklers as indicated in Table 10.3.3.2.1.

10.3.4.3 Minimum Distance from Walls.

10.3.4.3.1 Sprinklers shall be located a minimum of 4 in. (100 mm) from an end wall.

The dead-air space described in the FAQ beside 10.2.5.3 can also have a detrimental effect on sidewall sprinklers. Exhibit 10.14 shows the correct placement of a sidewall sprinkler adjacent to an end wall.

10.3.4.4 Minimum Distance Between Sprinklers. Sprinklers shall be spaced not less than 6 ft (1.8 m) on center unless required by 10.3.5.1.3.1 or unless the sprinklers are separated by baffles that comply with the following:

(1) Baffles shall be arranged to protect the actuating elements.
(2) Baffles shall be of solid and rigid material that will stay in place before and during sprinkler operation.
(3) Baffles shall be not less than 8 in. (200 mm) long and 6 in. (150 mm) high.
(4) The tops of baffles shall extend between 2 in. and 3 in. (50 mm and 75 mm) above the deflectors.
(5) The bottoms of baffles shall extend downward to a level at least even with the deflectors.

The reference to 10.3.5.1.3.1 clarifies that the minimum distance rule does not apply to pendent sprinklers installed immediately adjacent to sidewall sprinklers under soffits deeper than 8 in. (200 mm). Exhibit 10.15 shows an example of compliant pendent and sidewall sprinklers in the same soffit.

EDUFIRE.IR

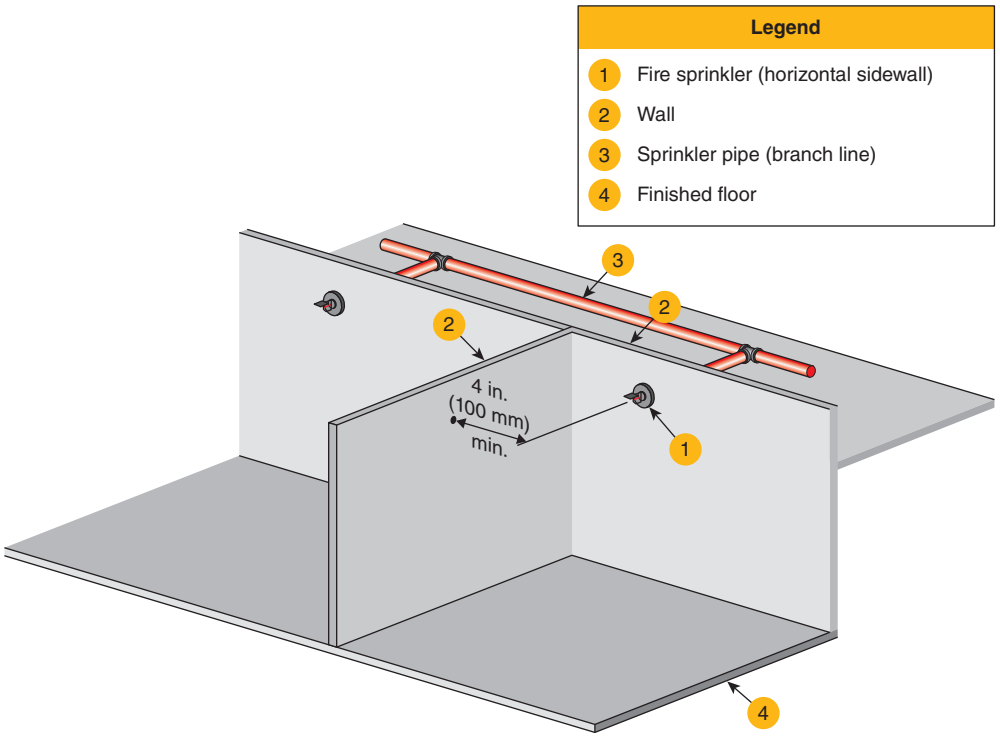

EXHIBIT 10.14 Sidewall Sprinkler Adjacent to End Wall. (Courtesy of Stephan Laforest)

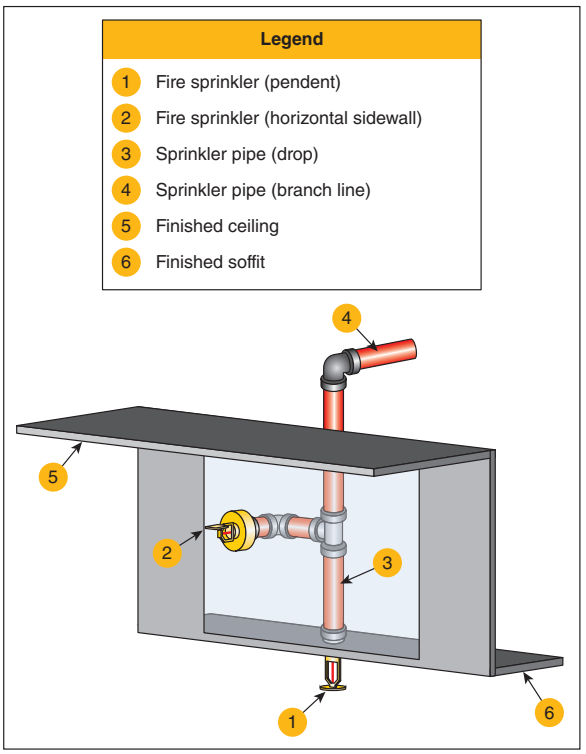

EXHIBIT 10.15 Pendent and Sidewall Sprinklers in the Same Soffit: (left) a photo (Courtesy of American Fire Sprinkler Association) and (right) an illustration. (Courtesy of Stephan Laforest)

EDUFIRE.IR

10.3.5 Deflector Position from Ceilings and Walls (Standard Sidewall Spray Sprinklers).

10.3.5.1 Distance Below Ceilings and from Walls.

10.3.5.1.1 Ceilings.

10.3.5.1.1.1 Unless the requirements of 10.3.5.1.1.2 are met, sidewall sprinkler deflectors shall be located not more than 6 in. (150 mm) or less than 4 in. (100 mm) from ceilings.

10.3.5.1.1.2 Horizontal sidewall sprinklers shall be permitted to be located in a zone 6 in. to 12 in. (150 mm to 300 mm) or 12 in. to 18 in. (300 mm to 450 mm) below noncombustible and limited-combustible ceilings where listed for such use.

Sidewall sprinklers should not be located in the dead-air space at the junction of the ceiling and the wall (see 10.3.5.1.1.2). The desirable sprinkler location is 4 in. to 6 in. (100 mm to 150 mm) from the ceiling, to optimize performance. As the sprinkler is lowered to more than 6 in. (150 mm) from the ceiling, it is likely to take longer to operate. In addition, the ceiling affects the discharge of a sidewall sprinkler, causing the spray pattern to change as the sprinkler is lowered. The sprinkler can be lowered as much as 18 in. (450 mm) if it is specifically tested and listed for such use.

10.3.5.1.2 Walls.

10.3.5.1.2.1* Vertical sidewall sprinkler deflectors shall be located not more than 6 in. (150 mm) or less than 4 in. (100 mm) from the wall from which they are projecting.

A.10.3.5.1.2.1 The 6 in. (150 mm) as referenced is measured from the wall to the vertical plane representing the surface of attachment of the deflector. See Figure A.10.3.5.1.2.1.

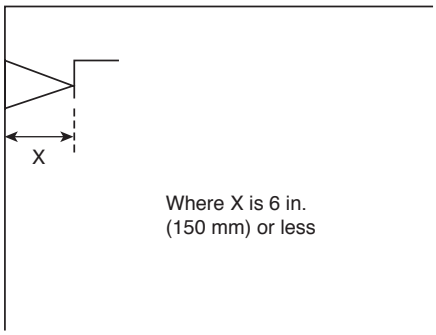

FIGURE A.10.3.5.1.2.1 *Sidewall Sprinkler Deflector Measurement From Walls.*

10.3.5.1.2.2 Horizontal sidewall sprinkler deflectors shall be located no more than 6 in. (150 mm), and shall be permitted to be located with their deflectors less than 4 in. (100 mm), from the wall on which they are mounted.

The requirement in 10.3.5.1.2.2 permits horizontal sidewall sprinklers to be installed less than 4 in. (100 mm) from the wall to which they are mounted. This requirement is similar to the requirement in 10.2.6.1.1.2 for flush and concealed pendent sprinklers with respect to the position relative to the ceiling and allows the sprinkler to be mounted on the surface of a wall or soffit.

10.3.5.1.3 Lintels and Soffits.

10.3.5.1.3.1 Where soffits used for the installation of sidewall sprinklers exceed 8 in. (200 mm) in width or projection from the wall, additional sprinklers shall be installed below the soffit.

EDUFIRE.IR

10.3.5.1.3.2* Where soffits used for the installation of sidewall sprinklers are less than or equal to 8 in. (200 mm) in width or projection from the wall, additional sprinklers shall not be required below the soffit when the sidewall sprinkler is installed on the soffit.

The evaluation of a sidewall sprinkler includes testing of its ability to project water to the back wall area of a soffit and wall. This ability decreases as the depth of the soffit increases; thus, the 8 in. (200 mm) maximum soffit is viewed as a maximum practical width. When sidewall sprinklers are installed in a back-to-back configuration, as described in 10.3.4.1.4, the width of the soffit cannot exceed 16 in. (400 mm).

A.10.3.5.1.3.2 See Figure A.10.3.5.1.3.2.

10.3.5.1.3.3* A sidewall sprinkler shall be permitted to be installed under a soffit when both the minimum distance from the sprinkler deflector to the bottom of the soffit and maximum distance from the sprinkler deflector to the high ceiling is maintained.

A.10.3.5.1.3.3 See Figure A.10.3.5.1.3.3.

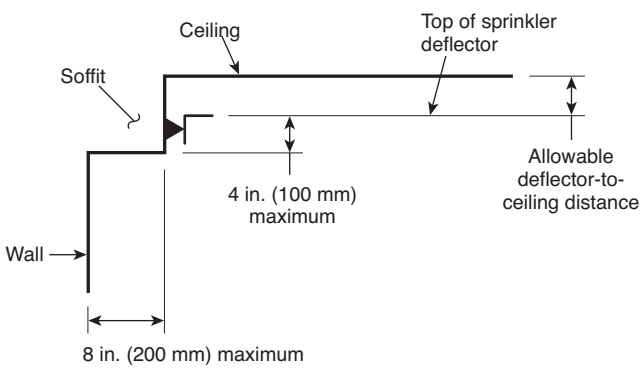

FIGURE A.10.3.5.1.3.2 Location Sidewalls with Respect to Soffits — Sidewall in Soffit.

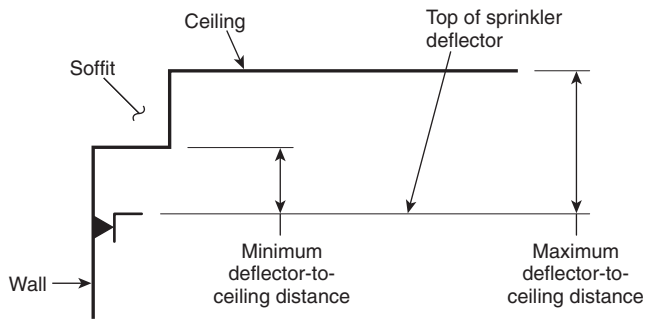

FIGURE A.10.3.5.1.3.3 Location Sidewalls with Respect to Soffits — Sidewall Under Soffit.

10.3.5.1.4* Soffits and Cabinets. Where soffits are used for the installation of sidewall sprinklers, the sprinklers and soffits shall be installed in accordance with 10.3.5.1.4.1, 10.3.5.1.4.2, or 10.3.5.1.4.3.

A.10.3.5.1.4 The requirements in 10.3.5.1.4 were developed from years of experience with NFPA 13 obstruction requirements and an additional test series conducted by the National Fire Sprinkler Association with the help of Tyco International (Valentine and Isman, *Kitchen Cabinets and Residential Sprinklers*, National Fire Sprinkler Association, November 2005), which included fire modeling, distribution tests, and full-scale fire tests. The test series showed that pendent sprinklers definitely provide protection for kitchens, even for fires that start under the cabinets. The information in the series was less than definitive for sidewall sprinklers, but distribution data show that sprinklers in the positions in this standard provide adequate water distribution in front of the cabinets and that sidewall sprinklers should be able to control a fire that starts under the cabinets. When protecting kitchens or similar rooms with cabinets, the pendent sprinkler should be the first option. If pendent sprinklers cannot be installed, the next best option is a sidewall sprinkler on the opposite wall from the cabinets, spraying in the direction of the cabinets. The third best option is the sidewall sprinkler on the same wall as the cabinets, on a soffit flush with the face of the cabinet. The last option should be putting sprinklers on the wall back behind the face of the cabinet because this location is subject to being blocked by items placed on top of the cabinets. It is not the intent of the committee to require sprinklers under kitchen cabinets.

EDUFIRE.IR

10.3.5.1.4.1 Where soffits exceed more than 8 in. (200 mm) in width or projection from the wall, pendent sprinklers shall be installed under the soffit.

10.3.5.1.4.2 Sidewall sprinklers shall be permitted to be installed in the face of a soffit located directly over cabinets, without requiring additional sprinklers below the soffit or cabinets, where the soffit does not project horizontally more than 12 in. (300 mm) from the wall.

10.3.5.1.4.3 Where sidewall sprinklers are more than 36 in. (900 mm) above the top of cabinets, the sprinkler shall be permitted to be installed on the wall above the cabinets where the cabinets are no greater than 12 in. (300 mm) from the wall.

FAQ [10.3.5.2.1]

Where sidewall sprinklers are installed under a sloped ceiling, is it acceptable to install the sprinkler at the low point of the slope?

No, where the ceiling is sloped, the sprinkler must be located on the high point of the slope, which is where heat from the fire collects. If sprinklers are located on any of the other three walls, a delay in sprinkler operation will occur.

By definition, a horizontal ceiling is a ceiling in which the slope is less than 2 in 12. If the ceiling has a slope that is not flat but is less than 2 in 12, placing the sprinklers at the high point is not necessary. However, the sprinkler deflectors must be parallel to the ceiling to allow the discharge pattern to develop without hitting the ceiling.

10.3.5.2 Deflector Orientation.

10.3.5.2.1 Sidewall sprinklers, where installed under a sloped ceiling with a slope exceeding 2 in 12, shall be located at the high point of the slope and positioned to discharge downward along the slope.

10.3.6 Obstructions to Sprinkler Discharge (Standard Sidewall Spray Sprinklers).

10.3.6.1 Performance Objective.

10.3.6.1.1 Sprinklers shall be located so as to minimize obstructions to discharge as defined in 9.5.5.2 and 9.5.5.3, or additional sprinklers shall be provided to ensure adequate coverage of the hazard.

Sidewall sprinklers are intended to be used in unobstructed construction for light hazard under smooth, horizontal, or sloped flat ceilings; for ordinary hazard occupancies under smooth, flat ceilings where specifically listed for ordinary hazard occupancies; and to protect areas under overhead doors. The sprinklers are very sensitive to obstructions, such as fluorescent light fixtures or beams located near or along the ceiling, which would impair the horizontal throw of water needed to provide proper coverage. However, obstructions cannot be avoided in all cases, and provisions are given for locating sidewall sprinklers so as to reduce the effect of obstructions.

10.3.6.1.2 Sidewall sprinklers shall not be installed less than 4 ft (1.2 m) from light fixtures or similar obstructions unless the requirements of 10.3.6.1.2.1 or 10.3.6.1.2.2 are met.

N **10.3.6.1.2.1** For obstructions such as light fixtures, where the greatest dimension of the obstruction is less than 2 ft (0.6 m), sidewall sprinklers shall be permitted to be installed at a minimum distance of three times the greatest dimension.

N **10.3.6.1.2.2** The bottom of light fixtures and similar obstructions located less than 4 ft (1.2 m) from the sprinkler shall be above the plane of the sprinkler deflector.

10.3.6.1.3 The distance between light fixtures or similar obstructions located 4 ft (1.2 m) or greater from the sprinkler shall be in conformity with Table 10.3.6.1.3 and Figure 10.3.6.1.3.

Paragraph 10.3.6.1.3 is analogous to the provisions for solid continuous obstructions for upright and pendent spray sprinklers (see 10.2.7.1.2) and is intended to ensure that sprinkler discharge falls below the obstruction. Table 10.3.6.1.3 is based on the discharge pattern falling away from the ceiling in a descending trajectory pattern. The farther the ceiling obstruction is from the wall, the higher the deflector can be positioned with respect to the ceiling. However, the sprinkler must be located at least 4 ft (1.2 m) from an obstruction to allow the discharge patterns to develop.

EDUFIRE.IR

TABLE 10.3.6.1.3 *Positioning of Sprinklers to Avoid Obstructions (Standard Sidewall Spray Sprinklers)*

Distance from Sidewall Sprinkler to Side of Obstruction (A)	***Maximum Allowable Distance of Deflector Above Bottom of Obstruction (B) [in. (mm)]***
4 ft (1.2 m) to less than 5 ft (1.5 m)	1 (25)
5 ft (1.5 m) to less than 5 ft 6 in. (1.7 m)	2 (50)
5 ft 6 in. (1.7 m) to less than 6 ft (1.8 m)	3 (75)
6 ft (1.8 m) to less than 6 ft 6 in. (2.0 m)	4 (100)
6 ft 6 in. (2.0 m) to less than 7 ft (2.1 m)	6 (150)
7 ft (2.1 m) to less than 7 ft 6 in. (2.3 m)	7 (175)
7 ft 6 in. (2.3 m) to less than 8 ft (2.4 m)	9 (225)
8 ft (2.4 m) to less than 8 ft 6 in. (2.6 m)	11 (275)
8 ft 6 in. (2.6 m) or greater	14 (350)

Note: For *A* and *B*, refer to Figure 10.3.6.1.3.

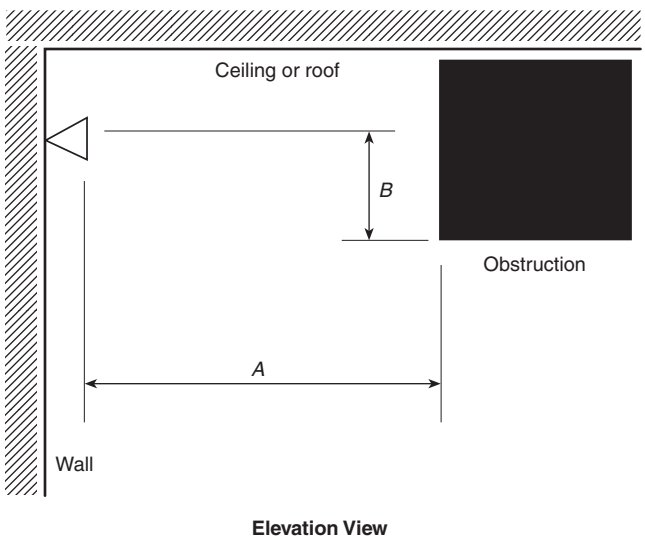

FIGURE 10.3.6.1.3 *Positioning of Sprinkler to Avoid Obstruction (Standard Sidewall Spray Sprinklers).*

10.3.6.1.4 Obstructions projecting from the same wall as the one on which the sidewall sprinkler is mounted shall be in accordance with Table 10.3.6.1.4 and Figure 10.3.6.1.4.

Sidewall sprinkler spray distribution is adversely affected by obstructions projecting out from the same wall on which the sprinkler is mounted. The effect is similar to the problems caused by a beam parallel to the wall on which the sprinkler is mounted (see 10.3.6.1.3). The obstruction prevents the sprinkler discharge from reaching the hazard on the other side of the obstruction. Because the sprinkler throw along the wall on which the sprinkler is mounted is shorter than the throw outward, the sprinkler can be located closer to the obstruction.

EDUFIRE.IR

TABLE 10.3.6.1.4 *Positioning of Sprinklers to Avoid Obstructions Along Wall (Standard Sidewall Spray Sprinklers)*

Distance from Sidewall Sprinkler to Side of Obstruction (A)	***Maximum Allowable Distance of Deflector Above Bottom of Obstruction (B) [in. (mm)]***
4 in. (100 mm) to less than 6 in. (150 mm)	1 (25)
6 in. (150 mm) to less than 1 ft (300 mm)	2 (50)
1 ft (300 mm) to less than 1 ft 6 in. (450 mm)	3 (75)
1 ft 6 in. (450 mm) to less than 2 ft (600 mm)	4½ (115)
2 ft (600 mm) to less than 2 ft 6 in. (750 mm)	5¾ (145)
2 ft 6 in. (750 mm) to less than 3 ft (900 mm)	7 (175)
3 ft (900 mm) to less than 3 ft 6 in. (1.1 m)	8 (200)
3 ft 6 in. (1.1 m) to less than 4 ft (1.2 m)	9¼ (230)
4 ft (1.2 m) to less than 4 ft 6 in. (1.4 m)	10 (250)
4 ft 6 in. (1.4 m) to less than 5 ft (1.5 m)	11½ (290)
5 ft (1.5 m) to less than 5 ft 6 in. (1.7 m)	12¾ (320)
5 ft 6 in. (1.7 m) to less than 6 ft (1.8 m)	14 (350)
6 ft (1.8 m) to less than 6 ft 6 in. (2.0 m)	15 (375)
6 ft 6 in. (2.0 m) to less than 7 ft (2.2 m)	16¼ (410)
7 ft (2.2 m) to less than 7 ft 6 in. (2.3 m)	17½ (440)

For SI units, 1 in. = 25.4 mm; 1 ft = 0.3048 m.

Note: For *A* and *B*, refer to Figure 10.3.6.1.4.

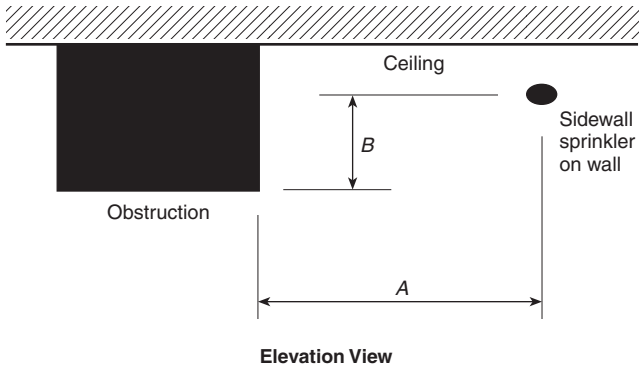

FIGURE 10.3.6.1.4 *Positioning of Sprinkler to Avoid Obstruction Along Wall (Standard Sidewall Spray Sprinklers).*

10.3.6.1.4.1 Isolated obstructions projecting from the same wall as the one on which the sidewall sprinkler is mounted shall be located a minimum of 4 in. (100 mm) from the sidewall sprinkler.

In addition to meeting the obstruction requirements in 10.3.6.1.4, the sidewall sprinkler must be located at least 4 in. (100 mm) from the obstruction to avoid the dead-air space along the obstruction. This requirement is similar to 10.3.4.3.1, which requires the sprinkler to be located away from an end wall.

10.3.6.1.5 Sprinklers shall be permitted to be spaced on opposite sides of obstructions less than 4 ft (1.2 m) in width where the distance from the centerline of the obstruction to the sprinklers does not exceed one-half the allowable distance between sprinklers.

EDUFIRE.IR

As in the case of upright and pendent sprinklers, when the sprinkler cannot be located such that the discharge will spray under the obstruction, sprinklers must be placed on opposite sides of an obstruction less than 4 ft (1.2 m) in width, provided that the distance between the sprinkler and the centerline of the obstruction does not exceed one-half the allowable distance between sprinklers.

10.3.6.1.6* Obstructions on the wall opposite from the sidewall sprinkler shall be permitted where the obstruction is up to 2 ft (600 mm) deep and 2 ft (600 mm) wide.

The purpose of the beam rules found in 10.3.6.1.3 and 10.3.6.1.4 is to make sure that sufficient water sprays past the obstruction to attack the fire on the far side of the obstruction. When the obstruction is against a wall, the sprinkler spray is not required to spray past the obstruction.

A.10.3.6.1.6 See Figure A.10.3.6.1.6.

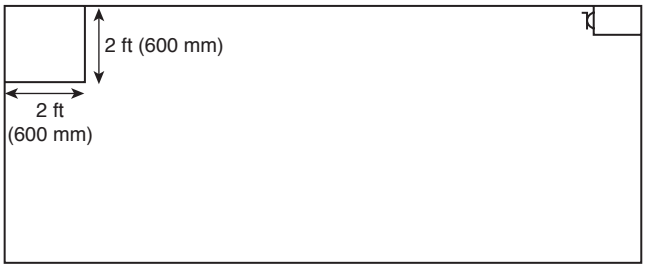

FIGURE A.10.3.6.1.6 *Permitted Obstruction on Wall Opposite Sidewall Sprinkler.*

10.3.6.2 Obstructions to Sprinkler Discharge Pattern Development.

Sidewall sprinklers, like upright and pendent sprinklers, must be located to avoid obstructions that affect the discharge pattern development or prevent the discharge from reaching the protected hazard. Paragraphs 10.3.6.2 through 10.3.6.3.2 on obstructions are similar in content to those for upright and pendent sprinklers in 10.2.7.2 through 10.2.7.3.5 These requirements are included in NFPA 13 to address what to do when such obstructions are encountered. Other types of sprinklers, such as upright or pendent sprinklers, should be used if the obstruction cannot be relocated or if the sidewall sprinkler cannot be repositioned along the wall to avoid the obstruction.

10.3.6.2.1 General.

10.3.6.2.1.1 Continuous or noncontinuous obstructions less than or equal to 18 in. (450 mm) below the sprinkler deflector that prevent the pattern from fully developing shall comply with this section.

10.3.6.2.1.2 Regardless of the rules of this section, solid continuous obstructions shall meet the requirements of 10.3.6.1.2 and 10.3.6.1.3.

10.3.6.2.1.3* Unless the requirements of 10.3.6.2.1.4 or 10.3.6.2.1.5 are met, sprinklers shall be positioned away from obstructions a minimum distance of three times the maximum dimension of the obstruction (e.g., truss webs and chords, pipe, columns, and fixtures) in accordance with Figure 10.3.6.2.1.3(a) and Figure 10.3.6.2.1.3(b).

(A) The maximum clear distance required to obstructions in the horizontal orientation (e.g., light fixtures and truss chords) shall be 24 in. (600 mm).

(B) The maximum clear distance shall not be applied to obstructions in the vertical orientation (e.g., columns).

EDUFIRE.IR

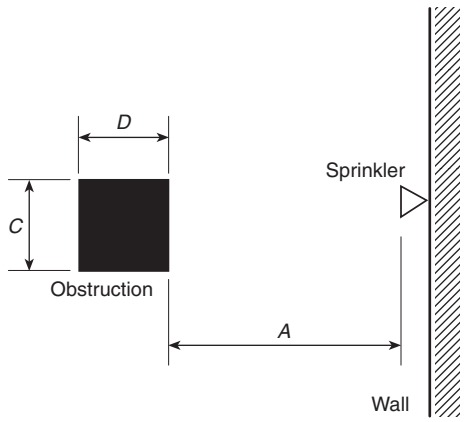

Plan View of Column
(Obstruction in vertical orientation)

$A \geq 3C$ or $3D$
(Use dimension C or D, whichever is greater)

FIGURE 10.3.6.2.1.3(a) *Minimum Distance from an Obstruction in the Vertical Orientation (Standard Sidewall Spray Sprinklers).*

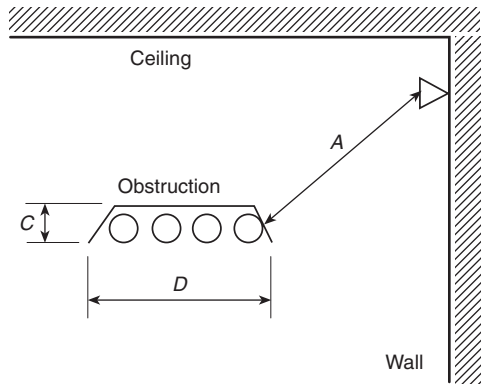

Elevation View of Pipe Conduit or Light Fixture

$A \geq 3C$ or $3D$
$A \leq 24$ in. (600 mm)
(Use dimension C or D, whichever is greater)

FIGURE 10.3.6.2.1.3(b) *Minimum Distance from an Obstruction in the Horizontal Orientation (Standard Sidewall Spray Sprinklers).*

A.10.3.6.2.1.3 The rules of 10.3.6.2.1.3 (known as the "Three Times Rule") have been written to apply to obstructions where the sprinkler can be expected to get water to both sides of the obstruction without allowing a significant dry shadow on the other side of the obstruction. This works for small noncontinuous obstructions and for continuous obstructions where the sprinkler can throw water over and under the obstruction, such as the bottom chord of an open truss or joist. For solid continuous obstructions, such as a beam, the Three Times Rule is ineffective since the sprinkler cannot throw water over and under the obstruction. Sufficient water must be thrown under the obstruction to adequately cover the floor area on the other side of the obstruction. To ensure this, compliance with the rules of 10.3.6.1.2 is necessary.

10.3.6.2.1.4 The requirements of 10.3.6.2.1.3 shall not apply to sprinkler system piping less than 3 in. (80 mm) in diameter.

10.3.6.2.1.5 The requirements of 10.3.6.2.1.3 shall not apply where sprinklers are positioned with respect to obstructions in accordance with 10.3.6.1.2, 10.3.6.1.3, and 10.3.6.1.4.

10.3.6.2.1.6* Sprinklers shall be permitted to be placed without regard to the blades of ceiling fans less than 60 in. (1.5 m) in diameter, provided the plan view of the fan is at least 50 percent open.

Just as for upright and pendent sprinklers, the blades on small fans less than 60 in. (1.5 m) in diameter are not considered obstructions if they are 50 percent open. See the commentary following 10.2.7.2.1.10.

A.10.3.6.2.1.6 The housing unit of the ceiling fan is expected to be addressed by the Three Times Rule.

10.3.6.2.2 Suspended or Floor-Mounted Vertical Obstructions. The distance from sprinklers to privacy curtains, free-standing partitions, room dividers, and similar obstructions in light hazard occupancies shall be in accordance with Table 10.3.6.2.2 and Figure 10.3.6.2.2.

The distances specified in Table 10.3.6.2.2 were derived from NBSIR 80–2097, *Full-Scale Fire Tests with Automatic Sprinklers in a Patient Room*.

EDUFIRE.IR

TABLE 10.3.6.2.2 *Suspended or Floor-Mounted Obstructions (Standard Sidewall Spray Sprinklers) in Light Hazard Occupancies Only*

Horizontal Distance (A)	***Minimum Vertical Distance Below Deflector (B) [in. (mm)]***
6 in. (150 mm) or less	3 (75)
More than 6 in. (150 mm) to 9 in. (225 mm)	4 (100)
More than 9 in. (225 mm) to 12 in. (300 mm)	6 (150)
More than 12 in. (300 mm) to 15 in. (375 mm)	8 (200)
More than 15 in. (375 mm) to 18 in. (450 mm)	9½ (240)
More than 18 in. (450 mm) to 24 in. (600 mm)	12½ (315)
More than 24 in. (600 mm) to 30 in. (750 mm)	15½ (390)
More than 30 in. (750 mm)	18 (450)

For SI units, 1 in. = 25.4 mm.

Note: For *A* and *B*, refer to Figure 10.3.6.2.2.

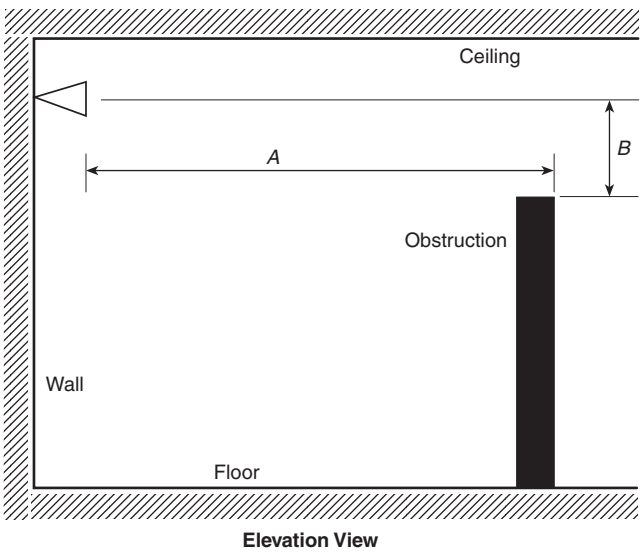

FIGURE 10.3.6.2.2 *Suspended or Floor-Mounted Obstruction (Standard Sidewall Spray Sprinklers) in Light Hazard Occupancy Only.*

10.3.6.2.2.1* In light hazard occupancies, privacy curtains, as shown in Figure 10.3.6.2.2, shall not be considered obstructions where all of the following are met:

(1) The curtains are supported by fabric mesh on ceiling track.
(2) Openings in the mesh are equal to 70 percent or greater.
(3) The mesh extends a minimum of 22 in. (550 mm) down from ceiling.

A.10.3.6.2.2.1 Testing has shown that privacy curtains supported from the ceiling by mesh fabric do not obstruct the distribution pattern in a negative way as long as the mesh is 70 percent or more open and extends from the ceiling a minimum of 22 in. (550 mm).

FAQ [10.3.6.2.2.1]

Can the requirements of 10.3.6.2.2 and Figure 10.3.6.2.2 be utilized in all occupancies?

The distance requirements of 10.3.6.2.2 and Figure 10.3.6.2.2 should not be applied beyond light hazard occupancies, because the testing of NBSIR 80–2097, *Full-Scale Fire Tests with Automatic Sprinklers in a Patient Room,* only evaluated sprinkler performance in a light hazard environment. The allowances of 10.3.6.2.2 have been misapplied in the past, so to clarify that the allowances of 10.3.6.2.2 apply to light hazard occupancies only, the titles of Table 10.3.6.2.2 and Figure 10.3.6.2.2 have been modified to include "in light hazard occupancies only."

EDUFIRE.IR

10.3.6.3* Obstructions that Prevent Sprinkler Discharge from Reaching Hazard.

A.10.3.6.3 See A.9.5.5.3.

10.3.6.3.1 Continuous or noncontinuous obstructions that interrupt the water discharge in a horizontal plane more than 18 in. (450 mm) below the sprinkler deflector in a manner to limit the distribution from reaching the protected hazard shall comply with this section.

10.3.6.3.2* Sprinklers shall be installed under fixed obstructions over 4 ft (1.2 m) wide.

N **A.10.3.6.3.2** When obstructions are located more than 18 in. (450 mm) below the sprinkler deflector, an adequate spray pattern develops and obstructions up to and including 4 ft (1200 mm) wide do not require additional protection underneath. Examples are ducts, stairs, landings, and other similar obstructions.

10.3.7* Clearance to Storage (Standard Sidewall Spray Sprinklers).

A.10.3.7 See 10.2.8.2.

N **10.3.7.1** The clearance between the deflector and the top of storage shall be 18 in. (450 mm) or greater.

N **10.3.7.2** The 18 in. (450 mm) dimension shall not limit the height of shelving on a wall or shelving against a wall in accordance with 10.3.7.

N **10.3.7.2.1** Where shelving is installed on a wall and is not directly below sprinklers, the shelves, including storage thereon, shall be permitted to extend above the level of a plane located 18 in. (450 mm) below ceiling sprinkler deflectors.

N **10.3.7.2.2** Shelving, and any storage thereon, directly below the sprinklers shall not extend above a plane located 18 in. (450 mm) below the ceiling sprinkler deflectors.

References Cited in Commentary

National Fire Protection Association, 1 Batterymarch Park, Quincy, MA 02169-7471.

NFPA 13D, *Standard for the Installation of Sprinkler Systems in One- and Two-Family Dwellings and Manufactured Homes,* 2019 edition.

NFPA 13R, *Standard for the Installation of Sprinkler Systems in Low-Rise Residential Occupancies,* 2019 edition.

NFPA 72®, National Fire Alarm and Signaling Code®, 2019 edition.

American Fire Sprinkler Association, 12750 Merit Drive, Suite 350, Dallas, TX 75251.

"Evaluating the Impact of Ceiling Pockets on Sprinkler Activation," available at www.firesprinkler.org.

National Institute of Standards and Technology, 100 Bureau Drive, Gaithersburg, MD 20899-1070.

NBSIR 80–2097, *Full-Scale Fire Tests with Automatic Sprinklers in a Patient Room,* 1980.

EDUFIRE.IR

Installation Requirements for Extended Coverage Upright, Pendent, and Sidewall Spray Sprinklers

CHAPTER

11

REORGANIZATION NOTE

The new Chapter 11 contains specific requirements for the installation of extended coverage pendent, upright, and sidewall sprinklers that were previously contained in Sections 8.4, 8.8, and 8.9 of the 2016 edition. To avoid redundancy, certain provisions already contained verbatim in the new Chapter 9 have not been repeated in Chapter 11.

N 11.1 General.

Extended coverage pendent, upright, and sidewall sprinklers shall be selected for use and installation as indicated in this chapter and shall be positioned and spaced in accordance with Section 9.5.

Many factors can influence the effectiveness of an extended coverage sprinkler installation, including the impact that construction and occupancy features have on sprinkler activation, the development of the sprinkler distribution pattern, and the presence of obstructions that could negatively affect or prevent water from reaching the hazard. The criteria in Chapter 11 address the factors that must be considered for an effective extended coverage sprinkler installation.

11.2 Extended Coverage Upright and Pendent Spray Sprinklers.

In recent years, the number of extended coverage sprinklers has increased dramatically. Most manufacturers have models suitable for ordinary and light hazard occupancies. Extended coverage sprinklers have also become available for extra hazard occupancies and areas of high-piled storage. Many of the provisions in Chapter 11 are similar to those found in Chapter 10. The main difference is that extended coverage sprinklers have larger protection areas and flatter distribution patterns than do standard spray pendent and upright sprinklers and, therefore, require greater separation distances from obstructions. Unless the rationale for the extended coverage sprinkler requirements differs from those for standard upright and pendent sprinklers, commentary regarding related items in Chapter 10 is not repeated in Chapter 11.

11.2.1 Extended Coverage Sprinklers. Extended coverage sprinklers shall only be installed as follows:

(1) In unobstructed construction consisting of flat, smooth ceilings with a slope not exceeding a pitch of 1 in 6 (a rise of 2 units in a run of 12 units, a roof slope of 16.7 percent)
(2) In unobstructed or noncombustible obstructed construction, where specifically listed for such use
(3) Within trusses or bar joists having web members not greater than 1 in. (25 mm) maximum dimension or where trusses are spaced greater than 7½ ft (2.3 m) on center and where the ceiling slope does not exceed a pitch of 1 in 6 (a rise of 2 units in a run of 12 units, a roof slope of 16.7 percent)

EDUFIRE.IR

(4) Extended coverage upright and pendent sprinklers installed under smooth, flat ceilings that have slopes not exceeding a pitch of 1 in 3 (a rise of 4 units in a run of 12 units, a roof slope of 33.3 percent), where specifically listed for such use
(5) Extended coverage sidewall sprinklers installed in accordance with 11.3.5.2.1 in slopes exceeding a ceiling pitch of 2 in 12
(6) In each bay of obstructed construction consisting of solid structural members that extend below the deflector of the sprinkler
(7) Extended coverage sprinklers installed to protect areas below a single overhead door(s)

11.2.2 Protection Areas per Sprinkler (Extended Coverage Upright and Pendent Spray Sprinklers).

11.2.2.1* Determination of Protection Area of Coverage.

A.11.2.2.1 The protection area for extended coverage upright and pendent sprinklers is defined in the listing of the sprinkler as a maximum square area. Listing information is presented in even 2 ft (0.6 m) increments up to 20 ft (6.1 m). When a sprinkler is selected for an application, its area of coverage must be equal to or greater than both the length and width of the hazard area. For example, if the hazard to be protected is a room 13 ft 6 in. (4.1 m) wide and 17 ft 6 in. (5.3 m) long as indicated in Figure A.11.2.2.1, a sprinkler that is listed to protect an area of 18 ft × 18 ft (5.5 m × 5.5 m) must be selected. The flow used in the calculations is then selected as the flow required by the listing for the selected coverage.

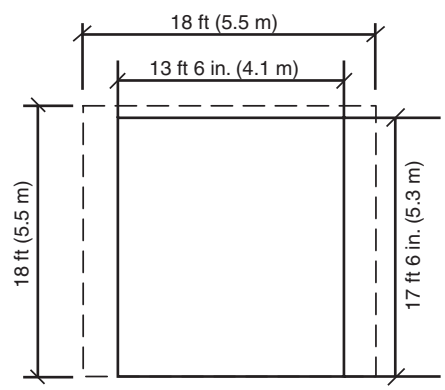

FIGURE A.11.2.2.1 *Determination of Protection Area of Coverage for Extended Coverage Upright and Pendent Sprinklers.*

11.2.2.1.1 The protection area of coverage (A_s) for extended coverage sprinklers shall be not less than that prescribed by the listing.

11.2.2.1.2 Listing dimensions shall be even-numbered square protection areas as shown in Table 11.2.2.1.2.

Restrictions are placed on the allowable spacing of upright and pendent extended coverage sprinklers in light and ordinary hazard occupancies, to promote interchangeability. As stated in 11.2.2.1.2, the protection area must be uniform — that is, a square pattern — so that the sprinkler can be installed without regard to the orientation of the frame arms. Limiting the spacing to even-numbered increments allows a variety of protection areas and promotes interchangeability among models from different manufacturers. The exception to this rule is extended coverage sprinklers used in extra hazard and high-piled storage occupancies. These sprinklers follow the same "S × L" rule as standard spray sprinklers, where *S* equals the larger of either the distance between sprinklers along a branchline or twice the distance from the last

EDUFIRE.IR

TABLE 11.2.2.1.2 Protection Areas and Maximum Spacing (Extended Coverage Upright and Pendent Spray Sprinklers)

	Light Hazard		Ordinary Hazard		Extra Hazard		High-Piled Storage	
Construction Type	Protection Area [ft²(m²)]	Spacing [ft(m)]	Protection Area [ft²(m²)]	Spacing [ft(m)]	Protection Area [ft²(m²)]	Spacing [ft(m)]	Protection Area [ft²(m²)]	Spacing [ft(m)]
Unobstructed	400 (37)	20 (6.1)	400 (37)	20 (6.1)	—	—	—	—
	324 (30)	18 (5.5)	324 (30)	18 (5.5)	—	—	—	—
	256 (24)	16 (4.9)	256 (24)	16 (4.9)	—	—	—	—
	—	—	196 (18)	14 (4.3)	196 (18)	14 (4.3)	196 (18)	14 (4.3)
	—	—	144 (13)	12 (3.7)	144 (13)	15 (4.6)	144 (13)	15 (4.6)
Obstructed noncombustible (when specifically listed for such use)	400 (37)	20 (6.1)	400 (37)	20 (6.1)	—	—	—	—
	324 (30)	18 (5.5)	324 (30)	18 (5.5)	—	—	—	—
	256 (24)	16 (4.9)	256 (24)	16 (4.9)	—	—	—	—
	—	—	196 (18)	14 (4.3)	196 (18)	14 (4.3)	196 (18)	14 (4.3)
	—	—	144 (13)	12 (3.7)	144 (13)	15 (4.6)	144 (13)	15 (4.6)
Obstructed combustible	N/A	N/A	N/A	N/A	N/A	N/A	N/A	N/A

sprinkler on the branchline to a wall, multiplied by *L*, which is the larger of either the distance between branchlines or twice the distance from the last branchline to a wall.

Extended coverage sprinklers are not allowed under combustible obstructed construction. Testing has shown that extending the sprinkler spacing under this type of construction allows the fire to ignite the ceiling, increasing the fire challenge and the potential for system failure.

11.2.2.1.3 Determination of the protection area of coverage and sprinkler spacing for sprinklers listed for extended coverage extra hazard or high-piled storage shall be permitted to be spaced in accordance with the requirements of 9.5.2 and 9.5.3 and shall not exceed 14 ft (4.3 m) maximum spacing and 196 ft² (18 m²) maximum area per sprinkler or 15 ft (4.6 m) maximum spacing and 144 ft² (13 m²) maximum area per sprinkler.

FAQ [11.2.2.1.3]

Why are extended coverage sprinklers listed for extra hazard or high-piled storage permitted to be used by the requirements of 9.5.2 and 9.5.3?

As part of the development for the extended coverage sprinklers used in extra hazard and high-piled storage occupancies, the ability to be able to design a system based on the "S x L" rules and not even numbered, equal sided areas was identified as a key development feature and was included in the sprinkler listing. When the criterion was presented for inclusion in NFPA 13, that listed criterion was added to into the standard.

11.2.2.2 Maximum Protection Area of Coverage.

11.2.2.2.1* The maximum allowable area of coverage for a sprinkler (A_s) shall be in accordance with the value indicated in Table 11.2.2.1.2.

A.11.2.2.2.1 Testing has shown that privacy curtains supported from the ceiling by mesh fabric do not obstruct the distribution pattern in a negative way as long as the mesh is 70 percent or more open and extends from the ceiling a minimum of 22 in. (550 mm).

11.2.2.2.2 In any case, the maximum area of coverage of a sprinkler shall not exceed 400 ft² (37 m²).

The maximum area of coverage for an extended coverage sprinkler limits the area that would be unprotected if a sprinkler were to be severely obstructed or fail to operate. The limit of 196 ft² (18.2 m²) for extra hazard and high-piled storage considers that fires in these occupancies develop much more rapidly than fires in light and ordinary hazard occupancies and can overtax adjacent sprinklers if one sprinkler fails to operate as anticipated.

11.2.3 Sprinkler Spacing (Extended Coverage Upright and Pendent Spray Sprinklers).

11.2.3.1 Maximum Distance Between Sprinklers.

11.2.3.1.1 The maximum distance permitted between sprinklers shall be based on the centerline distance between sprinklers on the branch line or on adjacent branch lines.

11.2.3.1.2 The maximum distance shall be measured along the slope of the ceiling.

EDUFIRE.IR

11.2.3.1.3 The maximum distance permitted between sprinklers shall comply with Table 11.2.2.1.2.

11.2.3.2 Maximum Distance from Walls.

11.2.3.2.1 The distance from sprinklers to walls shall not exceed one-half of the allowable distance permitted between sprinklers as indicated in Table 11.2.2.1.2.

11.2.3.2.2 The distance from the wall to the sprinkler shall be measured perpendicular to the wall.

11.2.3.2.3 Where walls are angled or irregular, the maximum horizontal distance between a sprinkler and any point of floor area protected by that sprinkler shall not exceed 0.75 times the allowable distance permitted between sprinklers.

11.2.3.3 Minimum Distance from Walls. Sprinklers shall be located a minimum of 4 in. (100 mm) from a wall unless listed for distances less than 4 in. (100 mm).

11.2.3.4 Minimum Distance Between Sprinklers.

11.2.3.4.1 Unless the requirements of 11.2.3.4.2 are met, sprinklers shall be spaced not less than 8 ft (2.4 m) on center.

11.2.3.4.2 Sprinklers shall be permitted to be placed less than 8 ft (2.4 m) on center where the following conditions are satisfied:

(1) Baffles shall be arranged to protect the actuating elements.
(2) Baffles shall be of solid and rigid material that will stay in place before and during sprinkler operation.
(3) Baffles shall be not less than 8 in. (200 mm) long and 6 in. (150 mm) high.
(4) The tops of baffles shall extend between 2 in. and 3 in. (50 mm and 75 mm) above the deflectors of upright sprinklers.
(5) The bottoms of baffles shall extend downward to a level at least even with the deflectors of pendent sprinklers.

11.2.4 Deflector Position (Extended Coverage Upright and Pendent Spray Sprinklers).

11.2.4.1 Distance Below Ceilings.

11.2.4.1.1 Unobstructed Construction.

FAQ [11.2.4.1.1.1]

Are the requirements of 11.2.4.1.1.1 applicable to the area directly above the sprinkler deflector or are they applicable to the entire area of coverage for the sprinkler?

Paragraph 11.2.4.1.1.1 clarifies that the measurement of the deflector distance of 1 in. to 12 in. (25 mm to 300 mm) is applied to the entire area of sprinkler coverage.

Additional text in 11.2.4.1.1.3 addresses ceilings having vertical changes in elevation. Also see the commentary following 10.2.6.1.1.3.

11.2.4.1.1.1 Under unobstructed construction, the distance between the sprinkler deflector and the ceiling shall be a minimum of 1 in. (25 mm) and a maximum of 12 in. (300 mm) throughout the area of coverage of the sprinkler.

11.2.4.1.1.2 The requirements of 11.2.4.1.1.1 shall not apply where ceiling-type sprinklers (concealed, recessed, and flush types) have the operating element above the ceiling and the deflector located nearer to the ceiling where installed in accordance with their listing.

11.2.4.1.1.3 The requirements of 11.2.4.1.1.1 shall not apply where sprinklers are listed for use under other ceiling construction features or for different distances where they shall be permitted to be installed in accordance with their listing.

11.2.4.1.1.4 The requirements of 11.2.4.1.1.1 shall not apply for light and ordinary hazard occupancies with ceilings of noncombustible or limited-combustible construction.

(A)* Where a vertical change in ceiling elevation within the area of coverage of the sprinkler creates a distance of more than 36 in. (900 mm) between the upper ceiling and the sprinkler deflector, a vertical plane extending down from the ceiling at the change in elevation shall be considered a wall for the purpose of sprinkler spacing.

EDUFIRE.IR

A.11.2.4.1.1.4(A) See Figure A.11.2.4.1.1.4(A).

(B)* Where the distance between the upper ceiling and the sprinkler deflector is less than or equal to 36 in. (900 mm), the sprinklers shall be permitted to be spaced as though the ceiling were flat, provided the obstruction rules are observed.

Many buildings use irregular ceilings as a design feature. These irregular ceilings might include soffits around the perimeter, pockets for purely decorative purposes, stepped ceilings, and beams in the center to break up the space. Conference facilities at hotels are a good example of where this type of construction is used. Such facilities also might have temporary partitions that can be opened and closed to separate a space into two or more individual rooms. Often these ceiling height changes are limited, while, in other cases, pockets or elevation changes are quite varied. The placement of sprinklers can be challenging in these spaces if all of rules in NFPA 13 are followed.

If the change in ceiling elevation exceeds 36 in. (900 mm), the change in elevation is treated as a wall, and sprinklers are spaced accordingly. If the change is less than 36 in. (900 mm), the ceiling is assumed to be flat (as long as the upper sprinkler is spaced so that it can throw underneath the lower ceiling), and the sprinklers are spaced accordingly. If the change in elevation is close enough to the sprinkler located at the ceiling that the sprinkler cannot develop its pattern, the elevation change is treated as an obstruction, and additional sprinklers must be added accordingly [see Figure A.11.2.4.1.1.4(A) and Figure A.11.2.4.1.1.4(B)]. An important note is that sprinklers are required within the upper ceiling area, unless the requirements for unprotected ceiling pockets in 11.2.7 can be met.

A.11.2.4.1.1.4(B) See Figure A.11.2.4.1.1.4(B).

11.2.4.1.2 Obstructed Construction. Under obstructed construction, the sprinkler deflector shall be located in accordance with one of the following arrangements:

(1) Installed with the deflectors within the horizontal planes of 1 in. to 6 in. (25 mm to 150 mm) below noncombustible structural members and a maximum distance of 22 in. (550 mm) below the ceiling/roof deck
(2) Installed with the deflectors at or above the bottom of noncombustible structural member to a maximum of 22 in. (550 mm) below the noncombustible ceiling/roof deck where the sprinkler is installed in conformance with 11.2.5.1.2

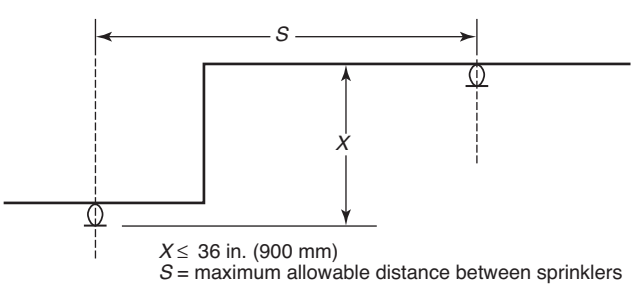

FIGURE A.11.2.4.1.1.4(A) Vertical Change in Ceiling Elevation Less Than or Equal to 36 in. (900 mm).

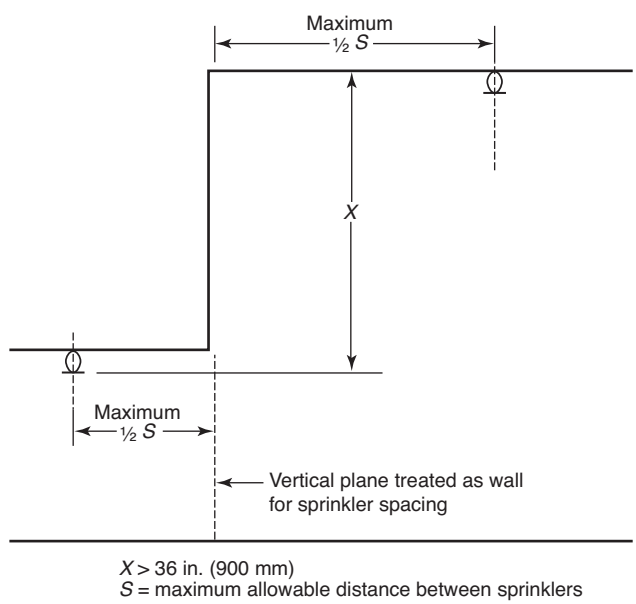

FIGURE A.11.2.4.1.1.4(B) Vertical Change in Ceiling Elevation Greater Than 36 in. (900 mm).

EDUFIRE.IR

(3) Installed in each bay of combustible or noncombustible obstructed construction, with the deflectors located a minimum of 1 in. (25 mm) and a maximum of 12 in. (300 mm) below the ceiling
(4) Installed in accordance with their listing where sprinklers are listed for use under other ceiling construction features or for different distances

11.2.4.1.3* Peaked Roofs and Ceilings. Sprinklers under or near the peak of a roof or ceiling shall have deflectors located not more than 3 ft (900 mm) vertically down from the peak in accordance with Figure 10.2.6.1.3.1(a) and Figure 10.2.6.1.3.1(b).

The installation of extended coverage sprinklers under peaked roofs rarely occurs due to the limitations on ceiling slope outlined in 11.2.1. When extended coverage sprinklers are specifically listed for slopes of up to 4 in 12, 11.2.1(4) might apply if the maximum allowable sprinkler spacing is used.

A.11.2.4.1.3 Saw-toothed roofs have regularly spaced monitors of saw tooth shape, with the nearly vertical side glazed and usually arranged for venting. Sprinkler placement is limited to a maximum of 3 ft (900 mm) down the slope from the peak because of the effect of venting on sprinkler sensitivity.

11.2.4.2 Deflector Orientation. Deflectors of sprinklers shall be aligned parallel to ceilings or roofs.

11.2.4.2.1 Roofs and ceilings having a pitch not exceeding 2 in 12 (16.7 percent) are considered horizontal in the application of 11.2.4.2, and sprinklers shall be permitted to be installed with deflectors horizontal.

11.2.5 Obstructions to Sprinkler Discharge (Extended Coverage Upright and Pendent Spray Sprinklers).

The provisions covering the location and placement of extended coverage sprinklers are similar to those for standard spray sprinklers. Because their spray pattern is flatter and their throw is longer than standard spray sprinklers, extended coverage sprinklers must be placed farther from obstructions than standard spray sprinklers. In addition, all obstructions must be considered, regardless of the occupancy hazard. The obstruction of the bottom chord must be considered, even when the sprinkler is located in the centerline of a joist or truss.

11.2.5.1 Performance Objective.

11.2.5.1.1 Sprinklers shall be located so as to minimize obstructions to discharge as defined in 11.2.5.2 and 11.2.5.3, or additional sprinklers shall be provided to ensure adequate coverage of the hazard.

11.2.5.1.2* Sprinklers shall be arranged to comply with one of the following arrangements:

(1) Sprinklers shall be in accordance with 9.5.5.2, Table 11.2.5.1.2, and Figure 11.2.5.1.2(a).
(2) Sprinklers shall be permitted to be spaced on opposite sides of obstructions not exceeding 4 ft (1.2 m) in width provided the distance from the centerline of the obstruction to the sprinklers does not exceed one-half the allowable distance permitted between sprinklers.
(3) Obstructions located against the wall and that are not over 30 in. (750 mm) in width shall be permitted to be protected in accordance with Figure 11.2.5.1.2(b).
(4) Obstructions located against the wall and that are not over 24 in. (600 mm) in width shall be permitted to be protected in accordance with Figure 11.2.5.1.2(c). The maximum distance between the sprinkler and the wall shall be measured from the sprinkler to the wall behind the obstruction and not to the face of the obstruction.

Frequently, obstructions against walls drop below the 18 in. (450 mm) projection below the sprinklers. In many cases, it is possible for a sprinkler to protect under such obstructions without needing a sprinkler directly below the obstruction. The additional entries in Table 11.2.5.1.2 also allow evaluation of ceiling elevation changes where the difference in elevation between the sprinkler and the lower ceiling is up

EDUFIRE.IR

to 36 in. (900 mm). The entries are carried to 10 ft (3 m) to include all the options for extended coverage sprinklers up to 20 ft x 20 ft (6.1 m x 6.1 m) spacing.

TABLE 11.2.5.1.2 *Position of Sprinklers to Avoid Obstructions to Discharge (Extended Coverage Upright and Pendent Spray Sprinklers)*

Distance from Sprinklers to Side of Obstruction (A)	*Maximum Allowable Distance of Deflector Above Bottom of Obstruction (B) [in. (mm)]*
Less than 1 ft (300 m)	0 (0)
1 ft (300 m) to less than 1 ft 6 in. (450 m)	0 (0)
1 ft 6 in. (450 m) to less than 2 ft (600 m)	1 (25)
2 ft (600 m) to less than 2 ft 6 in. (750 m)	1 (25)
2 ft 6 in. (750 m) to less than 3 ft (900 m)	1 (25)
3 ft (900 m) to less than 3 ft 6 in. (1.1 m)	3 (75)
3 ft 6 in. (1.1 m) to less than 4 ft (1.2 m)	3 (75)
4 ft (1.2 m) to less than 4 ft 6 in. (1.4 m)	5 (125)
4 ft 6 in. (1.4 m) to less than 5 ft (1.5 m)	7 (175)
5 ft (1.5 m) to less than 5 ft 6 in. (1.7 m)	7 (175)
5 ft 6 in. (1.7 m) to less than 6 ft (1.8 m)	7 (175)
6 ft (1.8 m) to less than 6 ft 6 in. (2 m)	9 (225)
6 ft 6 in. (2 m) to less than 7 ft (2.1 m)	11 (275)
7 ft (2.1 m) to less than 7 ft 6 in. (2.3 m)	14 (350)
7 ft 6 in. (2.3 m) to less than 8 ft (2.4 m)	14 (350)
8 ft (2.4 m) to less than 8 ft 6 in. (2.6 m)	15 (375)
8 ft 6 in. (2.6 m) to less than 9 ft (2.7 m)	17 (425)
9 ft (2.7 m) to less than 9 ft 6 in. (2.9 m)	19 (475)
9 ft 6 in. (2.9 m) to less than 10 ft (3.0 m)	21 (525)

Note: For *A* and *B*, refer to Figure 11.2.5.1.2(a).

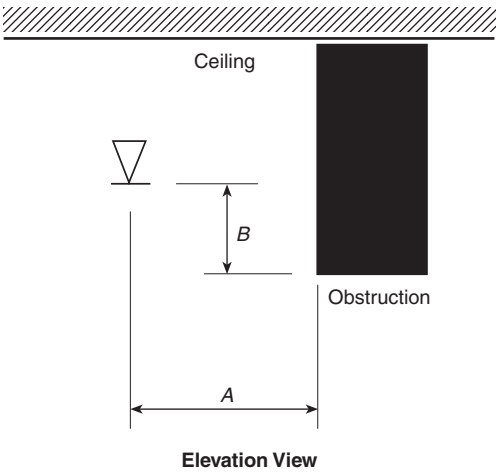

FIGURE 11.2.5.1.2(a) *Position of Sprinkler to Avoid Obstruction to Discharge (Extended Coverage Upright and Pendent Spray Sprinklers).*

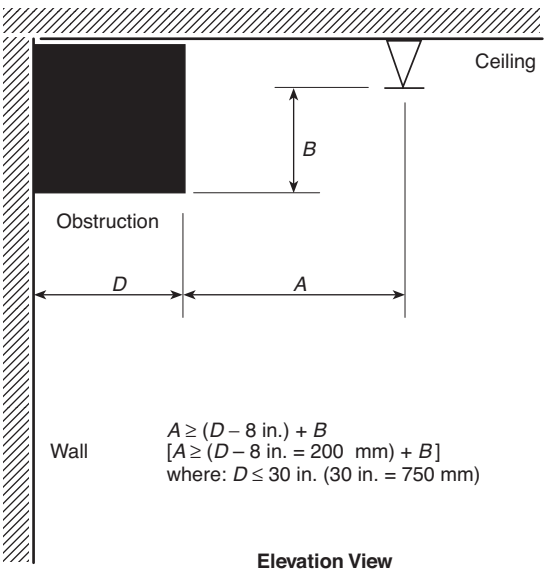

FIGURE 11.2.5.1.2(b) *Obstructions Against Walls (Extended Coverage Upright and Pendent Spray Sprinklers).*

EDUFIRE.IR

A.11.2.5.1.2 The intent of 11.2.5.1.2(3) is to apply to soffits that are located within the 18 in. (450 mm) plane from the sprinkler deflector. A soffit or other obstruction (i.e., shelf) located against a wall that is located entirely below the 18 in. (450 mm) plane from the sprinkler deflector should be in accordance with 11.2.5.3.2. *(See Figure A.11.2.5.1.2.)*

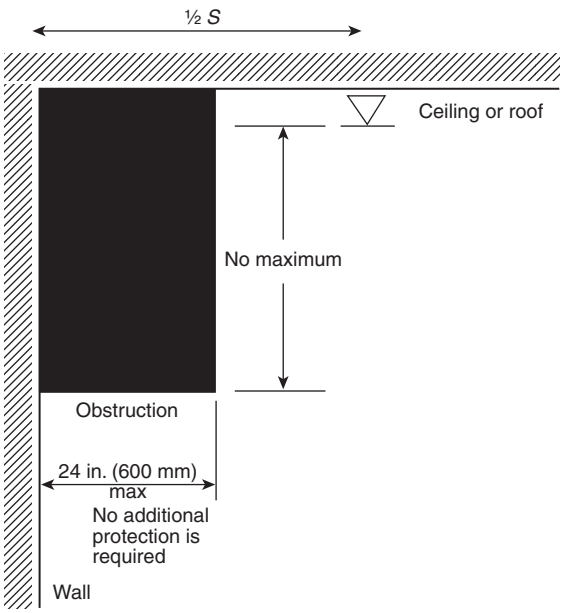

FIGURE 11.2.5.1.2(c) *Obstructions Against Walls (Extended Coverage Upright and Pendent Spray Sprinklers).*

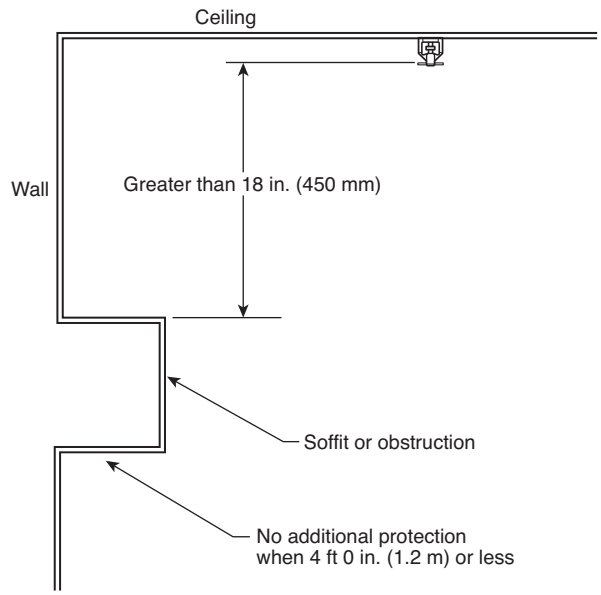

FIGURE A.11.2.5.1.2 *Soffit/Obstruction Against Wall Greater Than 18 in. (450 mm) Below Deflector.*

11.2.5.2 Obstructions to Sprinkler Discharge Pattern Development.

11.2.5.2.1 General.

11.2.5.2.1.1 Continuous or noncontinuous obstructions less than or equal to 18 in. (450 mm) below the sprinkler deflector that prevent the pattern from fully developing shall comply with 11.2.5.2.

11.2.5.2.1.2 Regardless of the rules of this section, solid continuous obstructions shall meet the applicable requirements of 11.2.5.1.2.

11.2.5.2.1.3* Unless the requirements of 11.2.5.2.1.4 through 11.2.5.2.1.8 are met, sprinklers shall be positioned away from obstructions a minimum distance of four times the maximum dimension of the obstruction (e.g., truss webs and chords, pipe, columns, and fixtures) in accordance with Figure 11.2.5.2.1.3(a) and Figure 11.2.5.2.1.3(b).

(A) The maximum clear distance required to obstructions in the horizontal orientation (e.g., light fixtures and truss chords) shall be 36 in. (900 mm).

(B) The maximum clear distance shall not be applied to obstructions in the vertical orientation (e.g., columns).

A.11.2.5.2.1.3 The rules of 11.2.5.2.1.3 (known as the "Four Times Rule") have been written to apply to obstructions where the sprinkler can be expected to get water to both sides of the obstruction without allowing a significant dry shadow on the other side of the obstruction. This works for small noncontinuous obstructions and for continuous obstructions where the

EDUFIRE.IR

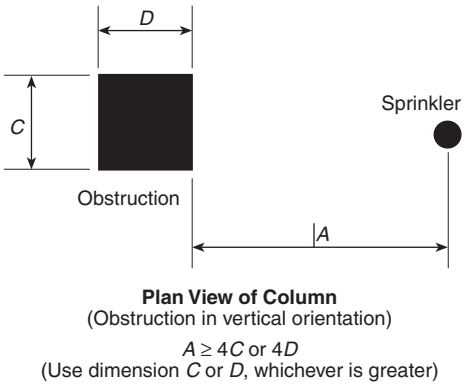

FIGURE 11.2.5.2.1.3(a) Minimum Distance from an Obstruction in the Vertical Orientation (Extended Coverage Upright and Pendent Spray Sprinkler).

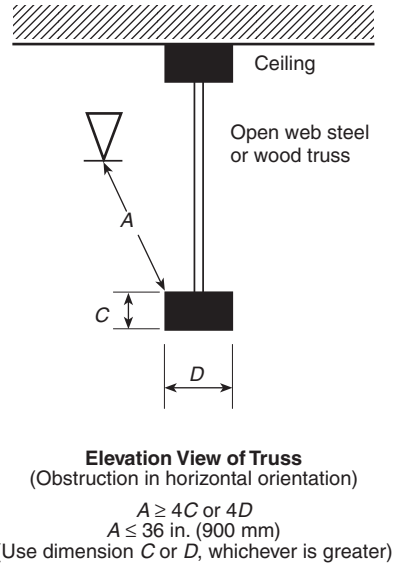

FIGURE 11.2.5.2.1.3(b) Minimum Distance from an Obstruction in the Horizontal Orientation (Extended Coverage Upright and Pendent Spray Sprinkler).

sprinkler can throw water over and under the obstruction, such as the bottom chord of an open truss or joist. For solid continuous obstructions, such as a beam, the Four Times Rule is ineffective since the sprinkler cannot throw water over and under the obstruction. Sufficient water must be thrown under the obstruction to adequately cover the floor area on the other side of the obstruction. To ensure this, compliance with the rules of 11.2.5.1.2 is necessary.

11.2.5.2.1.4 Sprinklers shall be permitted to be spaced on opposite sides of the obstruction where the distance from the centerline of the obstruction to the sprinklers does not exceed one-half the allowable distance between sprinklers.

11.2.5.2.1.5 Sprinklers shall be permitted to be located one-half the distance between the obstructions where the obstruction consists of wood bar joists 20 in. (500 mm) or greater apart, provided that the top and bottom chords of the wood bar joist are not greater than 4 in. (100 mm) (nominal) in width and bar members do not exceed 1 in. (25 mm) in width.

Paragraph 11.2.5.2.1.5 is intended to clarify that the trusses referred to in previous editions of NFPA 13 are wood bar joists with metal web members not exceeding 1 in. (25 mm) in width and not trusses with wood web members.

11.2.5.2.1.6 Sprinklers shall be permitted to be installed on the centerline of a truss or bar joist or directly above a beam, provided that the truss chord or beam, dimension is not more than 8 in. (200 mm) and the sprinkler deflector is located at least 6 in. (150 mm) above the structural member and where the sprinkler is positioned at a distance four times greater than the maximum dimension of the web members away from the web members.

Extended coverage upright and pendent spray sprinklers are permitted to be located on the centerline of a truss or bar joist when the bottom chord is no more than 8 in. (200 mm) in width as is allowed for standard spaced spray sprinklers.

11.2.5.2.1.7 The requirements of 11.2.5.2.1.3 shall not apply to sprinkler system piping less than 3 in. (80 mm) in diameter.

EDUFIRE.IR

11.2.5.2.1.8 The requirements of 11.2.5.2.1.3 shall not apply to sprinklers positioned with respect to obstructions in accordance with 11.2.5.1.2.

11.2.5.2.1.9* Sprinklers shall be permitted to be placed without regard to the blades of ceiling fans less than 60 in. (1.5 m) in diameter, provided the plan view of the fan is at least 50 percent open.

Just as for standard upright and pendent sprinklers, the blades on small fans less than 60 in. (1.5 m) in diameter are not considered obstructions if they are 50 percent open. See the commentary following 10.2.7.2.1.10.

A.11.2.5.2.1.9 The housing unit of the ceiling fan is expected to be addressed by the Four Times Rule.

11.2.5.2.2 Suspended or Floor-Mounted Vertical Obstructions. The distance from sprinklers to privacy curtains, freestanding partitions, room dividers, and similar obstructions in light hazard occupancies shall be in accordance with Table 11.2.5.2.2 and Figure 11.2.5.2.2.

TABLE 11.2.5.2.2 *Suspended or Floor-Mounted Obstructions (Extended Coverage Upright and Pendent Spray Sprinklers) in Light Hazard Occupancies Only*

Horizontal Distance (A)	*Minimum Vertical Distance Below Deflector (B) [in. (mm)]*
6 in. (150 mm) or less	3 (75)
More than 6 in. (150 mm) to 9 in. (225 mm)	4 (100)
More than 9 in. (225 mm) to 12 in. (300 mm)	6 (150)
More than 12 in. (300 mm) to 15 in. (375 mm)	8 (200)
More than 15 in. (375 mm) to 18 in. (450 mm)	9½ (240)
More than 18 in. (450 mm) to 24 in. (600 mm)	12½ (315)
More than 24 in. (600 mm) to 30 in. (750 mm)	15½ (390)
More than 30 in. (750 mm)	18 (450)

Note: For *A* and *B*, refer to Figure 11.2.5.2.2.

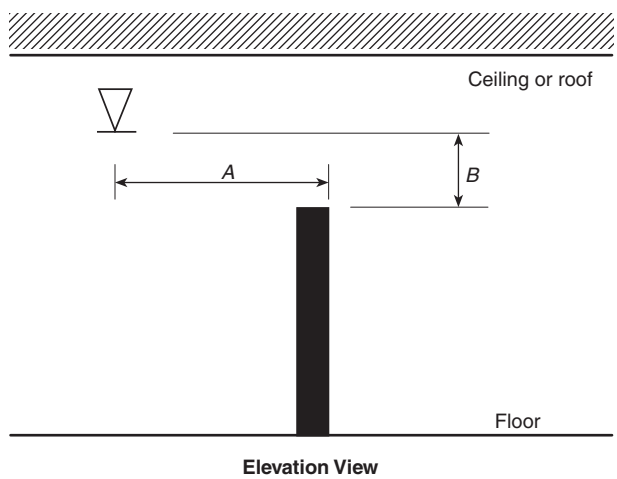

FIGURE 11.2.5.2.2 *Suspended or Floor-Mounted Obstruction (Extended Coverage Upright and Pendent Spray Sprinklers) in Light Hazard Occupancy Only.*

EDUFIRE.IR

11.2.5.2.2.1 In light hazard occupancies, privacy curtains, as shown in Figure 11.2.5.2.2, shall not be considered obstructions where all of the following are met:

(1) The curtains are supported by fabric mesh on ceiling track.
(2) Openings in the mesh are equal to 70 percent or greater.
(3) The mesh extends a minimum of 22 in. (550 mm) down from ceiling.

A July 2004 report of tests conducted by the National Institutes of Standards and Technology (NIST), "The Effect of Privacy Curtains on Sprinkler Spray," confirmed that privacy curtains supported by mesh that is at least 70 percent open and that extends down at least 22 in. (550 mm) allows as much water to reach the opposite side of the curtain as arrangements that meet the requirements of 11.2.5.2.2. This finding is recognized in 11.2.5.2.2.1.

11.2.5.3* Obstructions that Prevent Sprinkler Discharge from Reaching Hazard.

A.11.2.5.3 See A.9.5.5.3.

11.2.5.3.1 Continuous or noncontinuous obstructions that interrupt the water discharge in a horizontal plane more than 18 in. (450 mm) below the sprinkler deflector in a manner to limit the distribution from reaching the protected hazard shall comply with 11.2.5.3.

11.2.5.3.2* Sprinklers shall be installed under fixed obstructions over 4 ft (1.2 m) wide.

N **A.11.2.5.3.2** When obstructions are located more than 18 in. (450 mm) below the sprinkler deflector, an adequate spray pattern develops and obstructions up to and including 4 ft (1200 mm) wide do not require additional protection underneath. Examples are ducts, stairs, landings, and other similar obstructions.

11.2.5.3.3 Sprinklers shall not be required under obstructions that are not fixed in place such as conference tables.

11.2.5.3.4 Sprinklers installed under open gratings shall be of the intermediate level/rack storage type or otherwise shielded from the discharge of overhead sprinklers.

11.2.5.3.5 Sprinklers installed under round ducts shall be of the intermediate level/rack storage type or otherwise shielded from the discharge of overhead sprinklers.

11.2.6* Clearance to Storage (Extended Coverage Upright and Pendent Spray Sprinklers).

A.11.2.6 See 9.5.6.6.

11.2.6.1 The clearance between the deflector and the top of storage shall be 18 in. (450 mm) or greater.

11.2.6.2 Where other standards specify greater clearance to storage minimums, they shall be followed.

11.2.7 Clearance to Storage (Extended Coverage Upright and Pendent Spray Sprinklers).

11.2.7.1* The clearance between the deflector and top of storage shall be 18 in. (460 mm) or greater.

A.11.2.7.1 Ceiling features in unobstructed construction that are protected by sprinklers in the lower ceiling elevation when the higher ceiling elevation is within 12 in. (300 mm) of the deflectors or greater for sprinklers with greater listed distances from the higher ceiling should not be considered unprotected ceiling pockets.

N **11.2.7.2** The 18 in. (460 mm) dimension shall not limit the height of shelving on a wall or shelving against a wall in accordance with 11.2.7.

EDUFIRE.IR

N **11.2.7.2.1** Where shelving is installed on a wall and is not directly below sprinklers, the shelves, including storage thereon, shall be permitted to extend above the level of a plane located 18 in. (460 mm) below ceiling sprinkler deflectors.

N **11.2.7.2.2** Shelving, and any storage thereon, directly below the sprinklers shall not extend above a plane located 18 in. (460 mm) below the ceiling sprinkler deflectors.

11.2.8 Ceiling Pockets (Extended Coverage Upright and Pendent Spay Sprinklers).

11.2.8.1 Except as allowed in 11.2.8.2 and 11.2.8.3, sprinklers shall be required in all ceiling pockets.

11.2.8.2 Sprinklers shall not be required in ceiling pockets where all of the following are met:

(1) The total volume of the unprotected ceiling pocket does not exceed 1000 ft^3 (28 m^3).
(2) The depth of the unprotected ceiling pocket does not exceed 36 in. (900 mm).
(3) The entire floor under the unprotected ceiling pocket is protected by sprinklers at the lower ceiling elevation.
(4)* The total size of all unprotected ceiling pockets in the same compartment within 10 ft (3 m) of each other does not exceed 1000 ft^3 (28 m^3).

A.11.2.8.2(4) It is the intent of this section to allow compartments with multiple pockets, where the cumulative volume of the pockets exceeds 1000 ft^3 (28 m^3) and separated from each other by 10 ft (3 m) or more and still be permitted to be unprotected because with these values, a sprinkler would be required between such pockets. For smaller pockets where the cumulative volume does not exceed 1000 ft^3 (28 m^3), there is no reason to separate the pockets by any specific distance because they are not worse than a single pocket that is 1000 ft^3 (28 m^3).

(5) The unprotected ceiling pocket has noncombustible or limited-combustible finishes.
(6) Quick-response sprinklers are utilized throughout the compartment.

Ceiling pockets are covered in 10.2.9.1 and 10.2.9.2 (see Exhibit 11.1). In previous editions, NFPA 13 had assumed that sprinklers would be located in all ceiling pockets, with the exception of small skylights that

EXHIBIT 11.1 Two Scenarios Where Unprotected Ceiling Pockets Would Be Permitted.

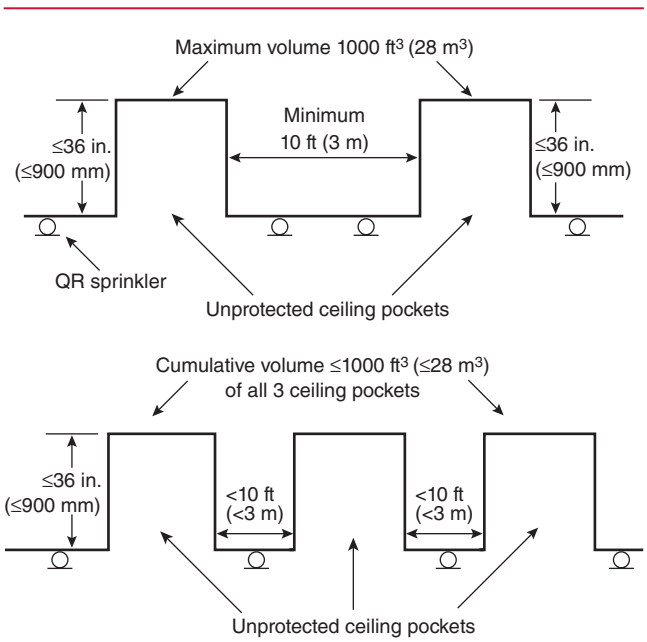

EDUFIRE.IR

were no larger than 4 ft × 8 ft (1.2 m × 2.4 m). The concern had been that, unless a sprinkler was placed in each pocket, heat would collect in the pocket and delay the operation of sprinklers.

Fire modeling was conducted by the American Fire Sprinkler Association (AFSA) to estimate the impact ceiling pockets have on sprinkler response at lower ceiling elevations and to determine what type of pockets can be left unsprinklered. (See the AFSA report "Evaluating the Impact of Ceiling Pockets on Sprinkler Activation.") After a review of the modeling results and field experience, rules were added to the 2002 edition of NFPA 13 to address these situations. The requirements were modified further in 2010 to address groups of small pockets with a cumulative volume less than 1000 ft3 (28 m3) and to separate the ceiling pocket requirements and the skylight requirements. The change provides guidance on the two leading questions regarding ceiling pockets: (1) whether sprinklers are required in pockets less than 12 in. (300 mm) deep, and (2) whether it is necessary to separate small unprotected pockets by more than 10 ft (3 m).

11.2.8.3 Sprinklers shall not be required in skylights and similar pockets in accordance with 9.3.16.

Skylights up to 32 ft^2 (3 m^2) in area are covered in 9.3.17. Larger skylights are considered ceiling pockets and must comply with the more restrictive requirements of 11.2.7.

11.3* Extended Coverage Sidewall Spray Sprinklers.

Most of the provisions in Section 11.3 are similar to those found in Section 10.3. The main difference is that extended coverage sidewall sprinklers have larger protection areas and flatter distribution patterns than standard spray sidewall sprinklers and, therefore, require greater separation distances from obstructions. Unless the rationale for the extended coverage sprinkler requirements differs from those for standard sidewall sprinklers, commentary regarding related items in Section 10.3 is not repeated in Section 11.3.

A.11.3 See 9.5.6.6.

11.3.1 General. All requirements of Section 9.5 shall apply to extended coverage sidewall spray sprinklers except as modified in Section 11.3.

N **11.3.2** Extended coverage sidewall spray sprinklers shall only be installed as follows:

(1) Light hazard occupancies with smooth, horizontal or sloped, flat ceilings
(2) Ordinary hazard occupancies with smooth, flat ceilings where specifically listed for such use
(3) In unobstructed construction consisting of flat, smooth ceilings with a slope not exceeding a pitch of 1 in 6 (a rise of 2 units in a run of 12 units, a roof slope of 16.7 percent)
(4) In unobstructed or noncombustible obstructed construction, where specifically listed for such use
(5) Within trusses or bar joists having web members not greater than 1 in. (25 mm) maximum dimension or where trusses are spaced greater than 7½ ft (2.3 m) on center and where the ceiling slope does not exceed a pitch of 1 in 6 (a rise of 2 units in a run of 12 units, a roof slope of 16.7 percent)
(6) Extended coverage sidewall sprinklers installed in accordance with 11.3.6.2.2 in slopes exceeding a ceiling pitch of 2 in 12
(7) In each bay of obstructed construction consisting of solid structural members that extend below the deflector of the sprinkler
(8) Extended coverage sprinklers installed to protect areas below a single overhead door(s)

EDUFIRE.IR

11.3.3 Protection Areas per Sprinkler (Extended Coverage Sidewall Spray Sprinklers).

11.3.3.1* Determination of Protection Area of Coverage.

A.11.3.3.1 The protection area for extended coverage sidewall spray sprinklers is defined in the listing of the sprinkler as a maximum square or rectangular area. Listing information is presented in even 2 ft (0.6 m) increments up to 28 ft (9 m) for extended coverage sidewall spray sprinklers. When a sprinkler is selected for an application, its area of coverage must be equal to or greater than both the length and width of the hazard area. For example, if the hazard to be protected is a room 14 ft 6 in. (4.4 m) wide and 20 ft 8 in. (6.3 m) long as indicated in Figure A.11.3.3.1, a sprinkler that is listed to protect an area of 16 ft × 22 ft (4.9 m × 6.7 m) must be selected. The flow used in the calculations is then selected as the flow required by the listing for the selected coverage.

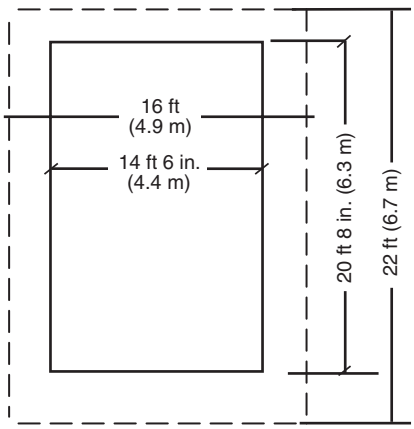

FIGURE A.11.3.3.1 *Determination of Protection Area of Coverage for Extended Coverage Sidewall Sprinklers.*

11.3.3.1.1 The protection area of coverage per sprinkler (A_s) for extended coverage sidewall sprinklers shall be not less than that prescribed by the listing.

11.3.3.1.2 Listing dimensions shall be in 2 ft (600 mm) increments up to 28 ft (8.5 m).

Restrictions are placed on the allowable spacing of extended coverage sidewall sprinklers to maintain a degree of order and to promote interchangeability. Limiting the spacing to even-numbered increments (see 11.3.3.1.2) allows a variety of protection areas and promotes interchangeability between models from different manufacturers.

11.3.3.2 Maximum Protection Area of Coverage.

11.3.3.2.1 The maximum allowable protection area of coverage for a sprinkler (A_s) shall be in accordance with the value indicated in Table 11.3.3.2.1.

11.3.3.2.2 In any case, the maximum area of coverage of a sprinkler shall not exceed 400 ft^2 (37 m^2).

EDUFIRE.IR

TABLE 11.3.3.2.1 *Protection Area and Maximum Spacing for Extended Coverage Sidewall Spray Sprinklers*

	Light Hazard				*Ordinary Hazard*			
	Protection Area		*Spacing*		*Protection Area*		*Spacing*	
Construction Type	*ft²*	*m²*	*ft*	*m*	*ft²*	*m²*	*ft*	*m*
Unobstructed, smooth, flat	400	37	28	8.5	400	37	24	7.3

11.3.4 Sprinkler Spacing (Extended Coverage Sidewall Spray Sprinklers).

11.3.4.1 Maximum Distance Between Sprinklers.

11.3.4.1.1 The maximum distance permitted between sprinklers shall be based on the centerline distance between sprinklers on the branch line along the wall.

11.3.4.1.2 Where sprinklers are installed along the length of a single wall of rooms or bays, they shall be spaced in accordance with the maximum spacing provisions of Table 11.3.3.2.1.

11.3.4.1.3 Sidewall sprinklers shall not be installed back-to-back without being separated by a continuous lintel, soffit, or baffle.

11.3.4.1.4 Sidewall sprinklers shall be permitted to be installed on opposing or adjacent walls, provided no sprinkler is located within the maximum protection area of another sprinkler.

11.3.4.2 Maximum Distance from Walls. The distance from sprinklers to the end walls shall not exceed one-half of the allowable distance permitted between sprinklers as indicated in Table 11.3.3.2.1.

11.3.4.3 Minimum Distance from Walls.

11.3.4.3.1 Sprinklers shall be located a minimum of 4 in. (100 mm) from an end wall.

11.3.4.3.2 The distance from the wall to the sprinkler shall be measured perpendicular to the wall.

11.3.4.4 Minimum Distance Between Sprinklers. Sprinklers shall be not located within the maximum protection area of any other sprinkler unless required by 11.3.5.1.4.1 or separated by baffles that comply with the following:

(1) Baffles shall be arranged to protect the actuating elements.
(2) Baffles shall be of solid and rigid material that will stay in place before and during sprinkler operation.
(3) Baffles shall be not less than 8 in. (200 mm) long and 6 in. (150 mm) high.
(4) The tops of baffles shall extend between 2 in. and 3 in. (50 mm and 75 mm) above the deflectors.
(5) The bottoms of baffles shall extend downward to a level at least even with the deflectors.

11.3.5 Deflector Position from Ceilings and Walls (Extended Coverage Sidewall Spray Sprinklers).

11.3.5.1 Distance Below Ceilings and from Walls to Which Sprinklers Are Mounted.

11.3.5.1.1 Ceilings.

11.3.5.1.1.1 Unless the requirements of 11.3.5.1.1.2 are met, sidewall sprinkler deflectors shall be located not more than 6 in. (150 mm) nor less than 4 in. (100 mm) from ceilings.

11.3.5.1.1.2 Horizontal sidewall sprinklers shall be permitted to be located in a zone 6 in. to 12 in. (150 mm to 300 mm) or 12 in. to 18 in. (300 mm to 450 mm) below noncombustible or limited-combustible ceilings where listed for such use.

EDUFIRE.IR

11.3.5.1.2 Walls.

11.3.5.1.2.1* Sidewall sprinkler deflectors shall be located not more than 6 in. (150 mm) or less than 4 in. (100 mm) from walls on which they are mounted.

A.11.3.5.1.2.1 See A.10.3.5.1.2.1.

11.3.5.1.2.2 Horizontal sidewall sprinklers shall be permitted to be located with their deflectors less than 4 in. (100 mm) from the wall on which they are mounted.

11.3.5.1.3 Lintels and Soffits.

11.3.5.1.3.1* Where soffits used for the installation of sidewall sprinklers are less than or equal to 8 in. (200 mm) in width or projection from the wall, additional sprinklers shall not be required below the soffit.

A.11.3.5.1.3.1 See Figure A.11.3.5.1.3.1.

11.3.5.1.3.2* A sidewall sprinkler shall be permitted to be installed under a soffit when both the minimum distance from the sprinkler deflector to the bottom of the soffit and the maximum distance from the sprinkler deflector to the high ceiling are maintained.

A.11.3.5.1.3.2 See Figure A.11.3.5.1.3.2.

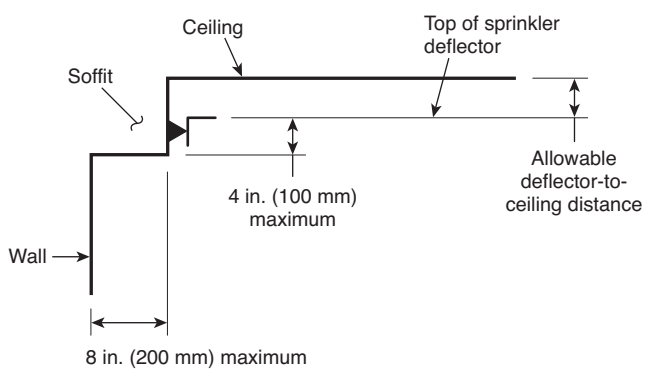

FIGURE A.11.3.5.1.3.1 Location of Extended Coverage Sidewalls with Respect to Soffits — Sidewall in Soffit.

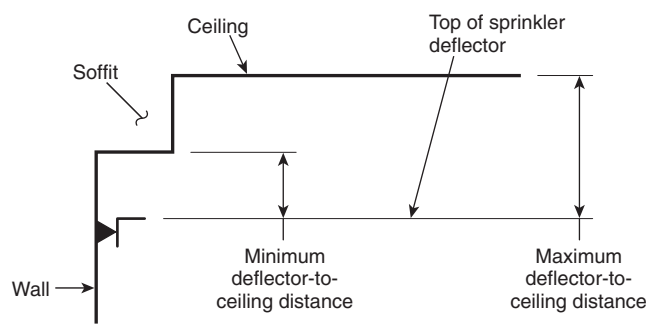

FIGURE A.11.3.5.1.3.2 Location of Extended Coverage Sidewalls with Respect to Soffits — Sidewall Under Soffit.

11.3.5.1.4* Soffits and Cabinets in Residential Areas/Occupancies. Where soffits are used for the installation of sidewall sprinklers, the sprinklers and soffits shall be installed in accordance with 11.3.5.1.4.1, 11.3.5.1.4.2, or 11.3.5.1.4.3.

FAQ [A.11.3.5.1.4]

Is sprinkler protection required under kitchen cabinets?

As stated in A.11.3.5.1.4, it is not the intent of NFPA 13 to require sprinklers under kitchen cabinets.

A.11.3.5.1.4 The requirements in 11.3.5.1.4 were developed from years of experience with NFPA 13 obstruction requirements and an additional test series conducted by the National Fire Sprinkler Association with the help of Tyco International (Valentine and Isman, *Kitchen Cabinets and Residential Sprinklers*, National Fire Sprinkler Association, November 2005), which included fire modeling, distribution tests, and full-scale fire tests. The test series showed that pendent sprinklers definitely provide protection for kitchens, even for fires that start under the cabinets. The information in the series was less than definitive for sidewall sprinklers, but distribution data show that sprinklers in the positions in this standard provide adequate water distribution in front of the cabinets and that sidewall sprinklers should be able to control a

EDUFIRE.IR

fire that starts under the cabinets. When protecting kitchens or similar rooms with cabinets, the pendent sprinkler should be the first option. If pendent sprinklers cannot be installed, the next best option is a sidewall sprinkler on the opposite wall from the cabinets, spraying in the direction of the cabinets. The third best option is the sidewall sprinkler on the same wall as the cabinets, on a soffit flush with the face of the cabinet. The last option should be putting sprinklers on the wall back behind the face of the cabinet because this location is subject to being blocked by items placed on top of the cabinets. It is not the intent of the committee to require sprinklers under kitchen cabinets.

Paragraph 11.3.5.1.4 provides guidance for the placement of extended coverage sprinklers where kitchen cabinets, soffits, or other fixtures hang from the wall. Pendent sprinklers located in the ceiling are the most effective option and are preferred where practical. Sidewall sprinklers installed on the opposite wall are also a good protection option. Sidewall sprinklers located on the same wall as the cabinet can be expected to provide adequate protection if installed in accordance with 11.3.5.1.4 but are the least desirable of the three alternatives.

11.3.5.1.4.1 Where soffits exceed more than 8 in. (200 mm) in width or projection from the wall, pendent sprinklers shall be installed under the soffit.

11.3.5.1.4.2 Sidewall sprinklers shall be permitted to be installed in the face of a soffit located directly over cabinets, without requiring additional sprinklers below the soffit or cabinets, where the soffit does not project horizontally more than 12 in. (300 mm) from the wall.

11.3.5.1.4.3 Where sidewall sprinklers are more than 3 ft (900 mm) above the top of cabinets, the sprinkler shall be permitted to be installed on the wall above the cabinets where the cabinets are no greater than 12 in. (300 mm) from the wall.

11.3.5.2 Deflector Orientation.

11.3.5.2.1 Sidewall sprinklers, where installed under a sloped ceiling with a slope exceeding 2 in 12, shall be located at the high point of the slope and positioned to discharge downward along the slope.

11.3.5.2.2 Sidewall sprinklers specifically listed for other ceiling configurations shall be permitted to be installed in accordance with the listing requirements.

FAQ [11.3.5.2.1]

Where sidewall sprinklers are installed under a sloped ceiling, is it acceptable to install the sprinkler at the low point of the slope?

Where the ceiling is sloped, the sprinkler must be located on the high point of the slope, which is where heat from the fire collects. If sprinklers were located on any of the other three walls, a delay in sprinkler operation would occur.

By definition, a horizontal ceiling is one in which the slope is less than 2 in 12. If the ceiling has a slope that is not flat but is less than 2 in 12, placing the sprinklers at the high point is not necessary. However, the sprinkler deflectors must be parallel to the ceiling to allow the discharge pattern to develop without hitting the ceiling.

11.3.6 Obstructions to Sprinkler Discharge (Extended Coverage Sidewall Spray Sprinklers).

11.3.6.1 Performance Objective.

11.3.6.1.1 Sprinklers shall be located so as to minimize obstructions to discharge as defined in 9.5.5.2 and 9.5.5.3, or additional sprinklers shall be provided to ensure adequate coverage of the hazard.

11.3.6.1.2 Sidewall sprinklers shall not be installed less than 8 ft (2.4 m) from light fixtures or similar obstructions unless the requirements of 11.3.6.1.2.1 or 11.3.6.1.2.2 are met.

N **11.3.6.1.2.1** For obstructions such as light fixtures, where the greatest dimension of the obstruction is less than 2 ft (0.6 m), sidewall sprinklers shall be permitted to be installed at a minimum distance of four times the greatest dimension.

N **11.3.6.1.2.2** For obstructions located 4 in. or greater above the plane of the sprinkler deflector the sprinkler shall be permitted to be located less than 8 ft (2.4 m) from the obstruction.

11.3.6.1.3 The distance between light fixtures or similar obstructions located 8 ft (2.4 m) or greater from the sprinkler shall be in conformance with Table 11.3.6.1.3 and Figure 11.3.6.1.3.

EDUFIRE.IR

TABLE 11.3.6.1.3 *Positioning of Sprinklers to Avoid Obstructions (Extended Coverage Sidewall Spray Sprinklers)*

Distance from Sidewall Sprinkler to Side of Obstruction (A)	*Maximum Allowable Distance of Deflector Above Bottom of Obstruction (B) [in. (mm)]*
8 ft (2.4 m) to less than 10 ft (3.0 m)	1 (25)
10 ft (3.0 m) to less than 11 ft (3.4 m)	2 (50)
11 ft (3.4 m) to less than 12 ft (3.7 m)	3 (75)
12 ft (3.7 m) to less than 13 ft (4.0 m)	4 (100)
13 ft (4.0 m) to less than 14 ft (4.3 m)	6 (150)
14 ft (4.3 m) to less than 15 ft (4.6 m)	7 (175)
15 ft (4.6 m) to less than 16 ft (4.9 m)	9 (225)
16 ft (4.9 m) to less than 17 ft (5.2 m)	11 (275)
17 ft (5.2 m) or greater	14 (350)

Note: For *A* and *B*, refer to Figure 11.3.6.1.3.

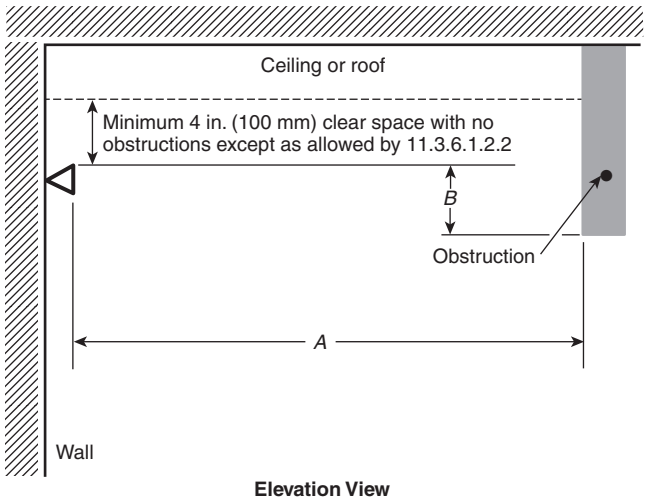

FIGURE 11.3.6.1.3 *Positioning of Sprinkler to Avoid Obstruction (Extended Coverage Sidewall Spray Sprinklers).*

11.3.6.1.4 Continuous obstructions projecting from the same wall as the one on which the sidewall sprinkler is mounted shall be in accordance with one of the following arrangements:

(1) Sprinklers shall be installed in accordance with Table 11.3.6.1.4 and Figure 11.3.6.1.4(a).
(2) Sprinklers shall be permitted to be spaced on opposite sides of obstructions less than 4 ft (1.2 m) in width where the distance from the centerline of the obstruction to the sprinklers does not exceed one-half the allowable distance between sprinklers.
(3) Obstructions located against the wall and that are not over 30 in. (750 mm) in width shall be permitted to be protected in accordance with Figure 11.3.6.1.4(b).

EDUFIRE.IR

TABLE 11.3.6.1.4 *Positioning of Sprinklers to Avoid Obstructions Along Wall (Extended Coverage Sidewall Spray Sprinklers)*

Distance from Sidewall Sprinkler to Side of Obstruction (A)	*Maximum Allowable Distance of Deflector Above Bottom of Obstruction (B) [in. (mm)]*
Less than 1 ft 6 in. (450 mm)	0 (0)
1 ft 6 in. (450 mm) to less than 3 ft (900 mm)	1 (25)
3 ft (900 mm) to less than 4 ft (1.2 m)	3 (75)
4 ft (1.2 m) to less than 4 ft 6 in. (1.4 m)	5 (125)
4 ft 6 in. (1.4 m) to less than 6 ft (1.5 m)	7 (175)
6 ft (1.5 m) to less than 6 ft 6 in. (2.0 m)	9 (225)
6 ft 6 in. (2.0 m) to less than 7 ft (2.1 m)	11 (275)
7 ft (2.1 m) to less than 7 ft 6 in. (2.3 m)	14 (350)

Note: For A and B, refer to Figure 11.3.6.1.4(a).

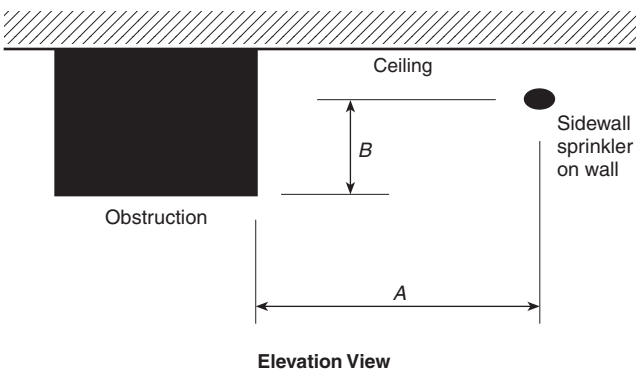

FIGURE 11.3.6.1.4(a) *Positioning of Sprinkler to Avoid Obstruction Along Wall (Extended Coverage Sidewall Spray Sprinklers).*

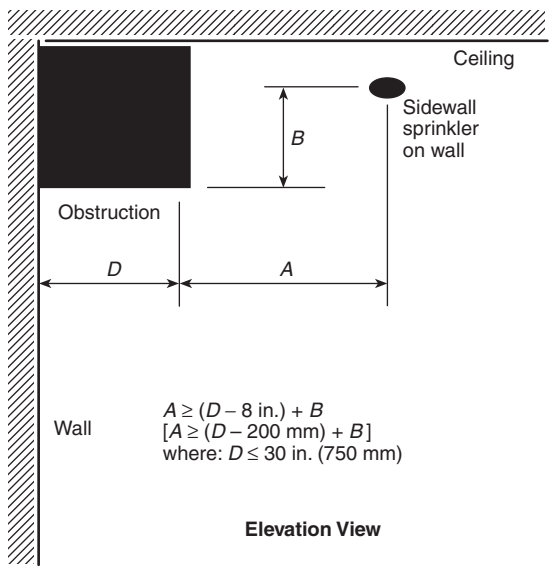

FIGURE 11.3.6.1.4(b) *Obstruction Against Wall (Extended Coverage Sidewall Spray Sprinklers).*

(4) Obstructions located against the wall and that are not over 24 in. (600 mm) in width shall be permitted to be protected in accordance with Figure 11.3.6.1.4(c). The maximum distance between the sprinkler and the wall shall be measured from the sprinkler to the wall behind the obstruction and not to the face of the obstruction.

11.3.6.1.5 Isolated Obstructions. Isolated obstructions projecting from the same wall as the one on which the extended coverage sidewall sprinkler is mounted shall be located a minimum of 6 in. (150 mm) from the sidewall sprinkler.

11.3.6.1.6* Obstructions on the wall opposite from the sidewall sprinkler shall be permitted where the obstruction is up to 2 ft (600 mm) deep and 2 ft (600 mm) wide.

A.11.3.6.1.6 See Figure A.11.3.6.1.6.

11.3.6.2 Obstructions to Sprinkler Discharge Pattern Development.

EDUFIRE.IR

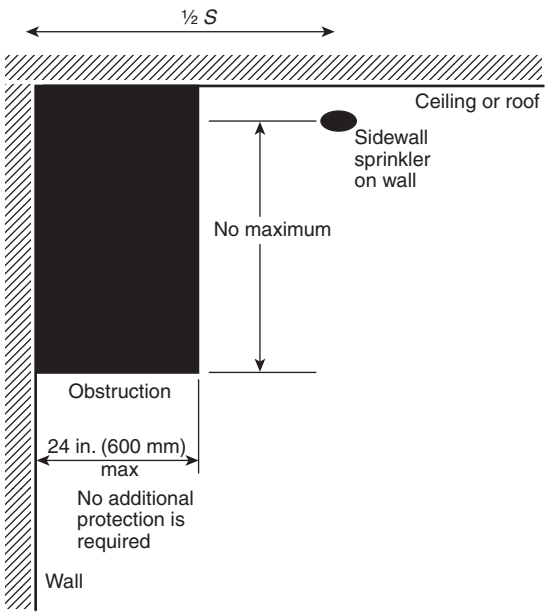

FIGURE 11.3.6.1.4(c) *Obstruction Against Wall (Extended Coverage Sidewall Spray Sprinklers).*

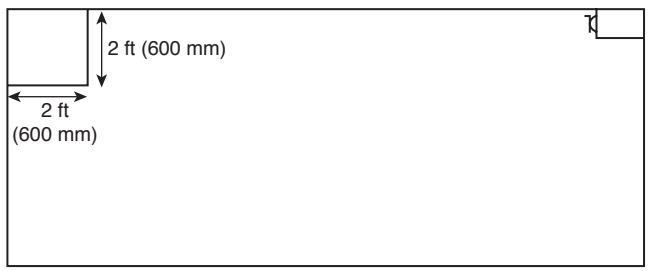

FIGURE A.11.3.6.1.6 *Permitted Obstruction on Wall Opposite EC Sidewall Sprinkler.*

11.3.6.2.1 General.

11.3.6.2.1.1 Continuous or noncontinuous obstructions less than or equal to 18 in. (450 mm) below the sprinkler deflector that prevent the pattern from fully developing shall comply with this section.

11.3.6.2.1.2 Regardless of the rules of this section, solid continuous obstructions shall meet the requirements of 11.3.6.1.2 and 11.3.6.1.3.

11.3.6.2.1.3* Unless the requirements of 11.3.6.2.1.4 and 11.3.6.2.1.5 are met, sprinklers shall be positioned away from obstructions a minimum distance of four times the maximum dimension of the obstruction (e.g., truss webs and chords, pipe, columns, and fixtures) in accordance with Figure 11.3.6.2.1.3(a) and Figure 11.3.6.2.1.3(b).

(A) The maximum clear distance required to obstructions in the horizontal orientation (e.g., light fixtures and truss chords) shall be 36 in. (900 mm).

(B) The maximum clear distance shall not be applied to obstructions in the vertical orientation (e.g., columns).

A.11.3.6.2.1.3 The rules of 11.3.6.2.1.3 (known as the "Four Times Rule") have been written to apply to obstructions where the sprinkler can be expected to get water to both sides of the obstruction without allowing a significant dry shadow on the other side of the obstruction. This works for small noncontinuous obstructions and for continuous obstructions where the sprinkler can throw water over and under the obstruction, such as the bottom chord of an open truss or joist. For solid continuous obstructions, such as a beam, the Four Times Rule is ineffective since the sprinkler cannot throw water over and under the obstruction. Sufficient water must be thrown under the obstruction to adequately cover the floor area on the other side of the obstruction. To ensure this, compliance with the rules of 11.3.6.1.2 is necessary.

11.3.6.2.1.4 The requirements of 11.3.6.2.1.3 and 11.3.6.2.1.4 shall not apply where sprinklers are positioned with respect to obstructions in accordance with 11.3.6.1.2 and 11.3.6.1.3.

EDUFIRE.IR

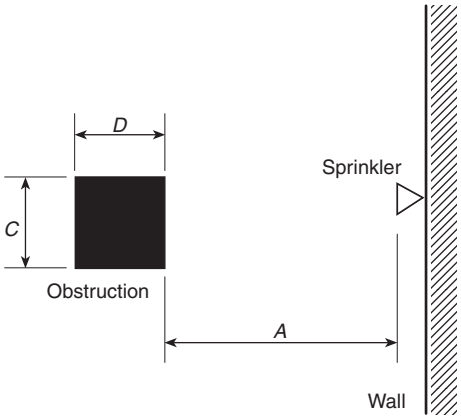

Plan View of Column
(Obstruction in vertical orientation)
$A \geq 4C$ or $4D$
(Use dimension C or D, whichever is greater)

FIGURE 11.3.6.2.1.3(a) *Minimum Distance from an Obstruction in the Vertical Orientation (Extended Coverage Sidewall).*

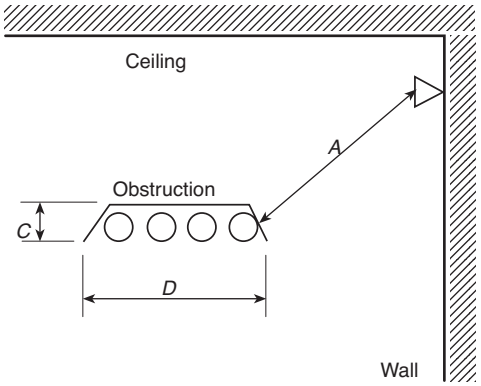

Elevation View of Pipe Conduit or Light Fixture
(Obstruction in horizontal orientation)
$A \geq 4C$ or $4D$
$A \leq 36$ in. (900 mm)
(Use dimension C or D, whichever is greater)

FIGURE 11.3.6.2.1.3(b) *Minimum Distance from an Obstruction in the Horizontal Orientation (Extended Coverage Sidewall).*

11.3.6.2.1.5 The requirements of 11.3.6.2.1.3 shall not apply to sprinkler system piping less than 3 in. (80 mm) in diameter.

11.3.6.2.1.6* Sprinklers shall be permitted to be placed without regard to the blades of ceiling fans less than 60 in. (1.5 m) in diameter, provided the plan view of the fan is at least 50 percent open.

Just as for other types of sprinklers, the blades on small fans less than 60 in. (1.5 m) in diameter are not considered obstructions if they are 50 percent open. See the commentary following 10.2.7.2.1.1.

A.11.3.6.2.1.6 The housing unit of the ceiling fan is expected to be addressed by the Four Times Rule.

11.3.6.2.2 Suspended or Floor-Mounted Vertical Obstructions. The distance from sprinklers to privacy curtains, freestanding partitions, room dividers, and similar obstructions in light hazard occupancies shall be in accordance with Table 11.3.6.2.2 and Figure 11.3.6.2.2.

TABLE 11.3.6.2.2 *Suspended or Floor-Mounted Obstructions (Extended Coverage Sidewall Sprinklers) in Light Hazard Occupancies Only*

Horizontal Distance (A)	*Minimum Allowable Distance Below Deflector (B) [in. (mm)]*
6 in. (150 mm) or less	3 (75)
More than 6 in. (150 mm) to 9 in. (225 mm)	4 (100)
More than 9 in. (225 mm) to 12 in. (300 mm)	6 (150)
More than 12 in. (300 mm) to 15 in. (375 mm)	8 (200)
More than 15 in. (375 mm) to 18 in. (450 mm)	9½ (240)
More than 18 in. (450 mm) to 24 in. (600 mm)	12½ (315)
More than 24 in. (600 mm) to 30 in. (750 mm)	15½ (390)
More than 30 in. (750 mm)	18 (450)

Note: For *A* and *B*, refer to Figure 11.3.6.2.2.

EDUFIRE.IR

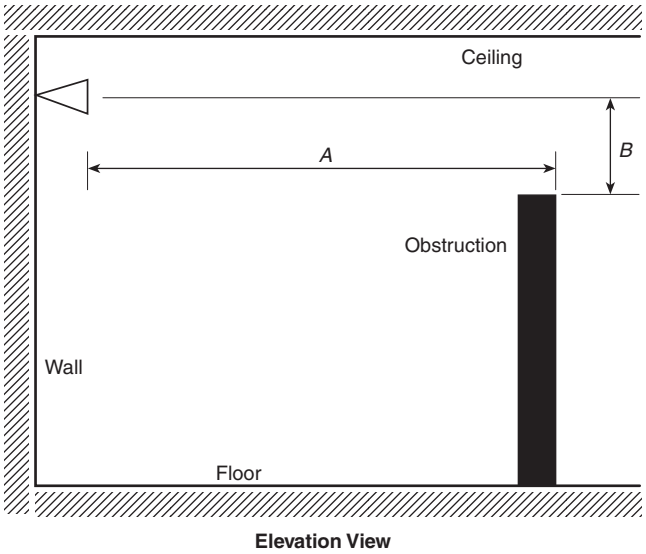

FIGURE 11.3.6.2.2 *Suspended or Floor-Mounted Obstruction (Extended Coverage Sidewall Sprinklers) in Light Hazard Occupancy Only.*

11.3.6.2.2.1* In light hazard occupancies, privacy curtains, as shown in Figure 11.3.6.2.2, shall not be considered obstructions where all of the following are met:

(1) The curtains are supported by fabric mesh on ceiling track.
(2) Openings in the mesh are equal to 70 percent or greater.
(3) The mesh extends a minimum of 22 in. (550 mm) down from ceiling.

A.11.3.6.2.2.1 Testing has shown that privacy curtains supported from the ceiling by mesh fabric do not obstruct the distribution pattern in a negative way as long as the mesh is 70 percent or more open and extends from the ceiling a minimum of 22 in. (550 mm).

11.3.6.3* Obstructions that Prevent Sprinkler Discharge from Reaching Hazard.

N **A.11.3.6.3** When obstructions are located more than 18 in. (450 mm) below the sprinkler deflector, an adequate spray pattern develops and obstructions up to and including 4 ft (1200 mm) wide do not require additional protection underneath. Examples are ducts, decks, open grate flooring, catwalks, cutting tables, overhead doors, soffits, ceiling panels, and other similar obstructions.

11.3.6.3.1 Continuous or noncontinuous obstructions that interrupt the water discharge in a horizontal plane more than 18 in. (450 mm) below the sprinkler deflector in a manner to limit the distribution from reaching the protected hazard shall comply with this section.

11.3.6.3.2* Sprinklers shall be installed under fixed obstructions over 4 ft (1.2 m) wide.

N **A.11.3.6.3.2** When obstructions are located more than 18 in. (450 mm) below the sprinkler deflector, an adequate spray pattern develops and obstructions up to and including 4 ft (1200 mm) wide do not require additional protection underneath. Examples are ducts, stairs, landings, and other similar obstructions.

11.3.6.3.3 Sprinklers shall not be required under obstructions that are not fixed in place, such as conference tables.

EDUFIRE.IR

N **11.3.7 Clearance to Storage (Extended Coverage Sidewall Spray Sprinklers).** The clearance between the deflector and the top of storage shall be 18 in. (450 mm) or greater.

References Cited in Commentary

American Fire Sprinkler Association, 12750 Merit Drive, Suite 350, Dallas, TX 75251.
"Evaluating the Impact of Ceiling Pockets on Sprinkler Activation," available at www.sprinklernet.org.

National Institute of Standards and Technology, 100 Bureau Drive, Gaithersburg, MD 20899-1070.
"The Effect of Privacy Curtains on Sprinkler Spray," July 2004.

EDUFIRE.IR

EDUFIRE.IR

CHAPTER

12

Installation Requirements for Residential Sprinklers

REORGANIZATION NOTE

The new Chapter 12 contains the specific requirements for the installation of residential sprinklers that were previously contained in Sections 8.4 and 8.10 of the 2016 edition. To avoid redundancy, certain provisions already contained verbatim in the new Chapter 9 are not repeated in Chapter 12.

Prior to the 2002 edition, NFPA 13 referred the user to NFPA 13D and NFPA 13R for the location and positioning requirements for residential sprinklers and to the requirements for extended coverage sprinklers for obstruction rules. To minimize the potential for confusion, Chapter 12 now contains guidance for residential sprinklers. No changes in intent have been made — as always, the manufacturer's requirements must be followed. Because the rules in Chapter 12 are similar to those in Chapters 10 and 11, commentary from related items is not repeated in Chapter 12.

N 12.1 General.

Residential sprinklers shall be selected for use and installation as indicated in this Chapter and shall be positioned and spaced in accordance with Section 9.5.

12.1.1* Residential sprinklers shall be permitted in dwelling units and their adjoining corridors, provided they are installed in conformance with their listing and when installed under the following conditions:

(1) A flat, smooth, horizontal ceiling with no beams up to a maximum of 24 ft (7.3 m) above the floor.
(2) A flat, horizontal, beamed ceiling, with a maximum ceiling height of 24 ft (7.3 m), with beams up to 14 in. (355 mm) deep with pendent sprinklers under the beams. The compartment containing the beamed ceiling shall be a maximum of 600 ft^2 (56 m^2) in area. The highest sprinkler in the compartment shall be above all openings from the compartment into any communicating spaces.
(3) A smooth, flat, sloped ceiling with no beams up to a maximum slope of 8 in 12. The highest portion of the ceiling shall not be more than 24 ft (7.3 m) above the floor. The highest sprinkler in the sloped portion of the ceiling shall be above all openings from the compartment containing the sloped ceiling into any communicating spaces.
(4) A sloped ceiling with beams up to 14 in. (350 mm) deep with pendent sprinklers under the beams. The compartment containing the sloped, beamed ceiling shall be a maximum of 600 ft^2 (56 m^2) in area. The slope of the ceiling shall be between 2 in 12 and 8 in 12. The highest portion of the ceiling shall not be more than 24 ft (7.3 m) above the floor. The highest sprinkler in the sloped portion of the ceiling shall be above all openings from the compartment containing the sloped ceiling into any communicating spaces.

EDUFIRE.IR

(5) A sloped ceiling with beams of any depth with sidewall or pendent sprinklers in each pocket formed by the beams. The compartment containing the sloped, beamed ceiling shall be a maximum of 600 ft^2 (56 m^2) in area. The slope of the ceiling shall be between 2 in 12 and 8 in 12. The highest portion of the ceiling shall not be more than 24 ft (7.3 m) above the floor.

A 2010 research study by the Fire Protection Research Foundation (FPRF), *Analysis of the Performance of Residential Sprinkler Systems with Sloped or Sloped and Beamed Ceilings*, prompted changes to both NFPA 13D, *Standard for the Installation of Sprinkler Systems in One- and Two-Family Dwellings and Manufactured Homes,* and NFPA 13R, *Standard for the Installation of Sprinkler Systems in Low-Rise Residential Occupancies,* to address system design and installation criteria to simplify the use of residential sprinklers. In addition to modifications to the ceiling height requirement, the revisions now address ceiling slopes, beam depth, beam spacing dimensions, and compartment size.

One of the important factors to consider is the limitation of the size of the compartment in items (2) through (5) of 12.1.1. The 600 ft^2 (56 m^2) limitation does not limit compartments of larger size. If the compartment is larger, the user will not be able to use the listing criteria as published by the manufacturer and will need to consider alternative discharge criteria as required by 12.1.2. It is also important to note that there is not a compartment size limitation for flat, smooth, horizontal ceilings with no beams.

SEE ALSO

The full FPRF report for more information, located at https://www.nfpa.org/News-and-Research/Fire-statistics-and-reports/Research-reports/Suppression.

A.12.1.1 The response and water distribution pattern of listed residential sprinklers have been shown by extensive fire testing to provide better control than spray sprinklers in residential occupancies. These sprinklers are intended to prevent flashover in the room of fire origin, thus improving the chance for occupants to escape or be evacuated.

The protection area for residential sprinklers is defined in the listing of the sprinkler as a maximum square or rectangular area. Listing information is presented in even increments from 12 ft to 20 ft (3.7 m to 6.1 m). When a sprinkler is selected for an application, its area of coverage must be equal to or greater than both the length and width of the hazard area. For example, if the hazard to be protected is a room 13 ft 6 in. (4.1 m) wide and 17 ft 6 in. (5.3 m) long, a sprinkler that is listed to protect a rectangular area of 14 ft × 18 ft (4.3 m × 5.5 m) or a square area of 18 ft × 18 ft (5.5 m × 5.5 m) must be selected. The flow used in the calculations is then selected as the flow required by the listing for the selected coverage.

Residential sprinklers can only be used in corridors that lead to dwelling units. However, the corridors that lead to dwelling units can also lead to other hazards that are not dwelling units and can still be protected with residential sprinklers.

N **12.1.2** Where construction features or other special conditions exist that are outside the scope of sprinkler listings, listed sprinklers shall be permitted to be installed beyond their listing limitations when acceptable to the authority having jurisdiction.

12.1.3 Residential sprinklers shall be used only in wet systems unless specifically listed for use in dry systems or preaction systems.

12.1.4 Where residential sprinklers are installed in a compartment as defined in 3.3.38, all sprinklers within the compartment shall be residential sprinklers.

12.1.5 Reserved.

12.1.6* Listings.

A.12.1.6 Residential sprinklers should be used in compliance with their listing limits. Where there are no listed residential sprinklers for a particular arrangement, other design approaches from NFPA 13 should be utilized, such as using quick-response sprinklers.

12.1.6.1 Areas of coverage shall be in accordance with the manufacturer's listing.

12.1.6.2 Residential sprinklers shall not be permitted to be used on ceilings with slopes greater than 8 in 12 or ceiling with heights greater than 24 ft (7.3 m) unless specifically listed for this purpose.

EDUFIRE.IR

12.1.7 Distances Between Sprinklers.

12.1.7.1 Maximum distances between sprinklers shall be in accordance with the manufacturer's listing.

12.1.7.2 The distance between the sprinkler and the wall shall not exceed half the maximum allowable distance between sprinklers per the manufacturer's listing.

12.1.7.3 The minimum distance between sprinklers within a compartment shall be 8 ft (2.4 m), unless the listing of the sprinkler requires a greater distance, unless required by 12.1.11.1.5.1, or unless separated by baffles that comply with the following:

(1) Baffles shall be arranged to protect the actuating elements.
(2) Baffles shall be of solid and rigid material that will stay in place before and during sprinkler operation.
(3) Baffles shall be not less than 8 in. (200 mm) long and 6 in. (150 mm) high.
(4) The tops of baffles shall extend between 2 in. and 3 in. (50 mm and 75 mm) above the deflectors of upright sprinklers.
(5) The bottoms of baffles shall extend downward to a level at least even with the deflectors of pendent sprinklers.

The reference to 12.1.11.1.5.1 in 12.1.7.3 clarifies that the minimum distance rule does not apply to pendent sprinklers installed immediately adjacent to sidewall sprinklers under soffits deeper than 8 in. (200 mm).

12.1.7.4 Residential sidewall sprinklers shall be permitted to be installed on opposing or adjacent walls, provided no sprinkler is located within the maximum protection area of another sprinkler or unless separated by baffles that comply with the following:

(1) Baffles shall be arranged to protect the actuating elements.
(2) Baffles shall be of solid and rigid material that will stay in place before and during sprinkler operation.
(3) Baffles shall be not less than 8 in. (200 mm) long and 6 in. (150 mm) high.
(4) The tops of baffles shall extend between 2 in. and 3 in. (50 mm and 75 mm) above the deflectors.
(5) The bottoms of baffles shall extend downward to a level at least even with the deflectors.

12.1.7.5 The maximum distance shall be measured along the slope of the ceiling as shown in Figure 12.1.7.5(a) and Figure 12.1.7.5(b).

12.1.7.6 Where sprinklers are installed along sloped ceilings, the sprinklers shall maintain the minimum listed spacing, but no less than 8 ft (2.4 m), measured in the plan view from one sprinkler to another as shown in Figure 12.1.7.6(a) and Figure 12.1.7.6(b), or unless separated by baffles that comply with the following:

(1) Baffles shall be arranged to protect the actuating elements.
(2) Baffles shall be of solid and rigid material that will stay in place before and during sprinkler operation.
(3) Baffles shall be not less than 8 in. (200 mm) long and 6 in. (150 mm) high.
(4) The tops of baffles shall extend between 2 in. and 3 in. (50 mm and 75 mm) above the deflectors of upright sprinklers.
(5) The bottoms of baffles shall extend downward to a level at least even with the deflectors of pendent sprinklers.

While the distance between sprinklers is measured along the slope of the ceiling, the minimum distance between residential sprinklers should be measured along the floor to ensure that cold soldering does not occur.

EDUFIRE.IR

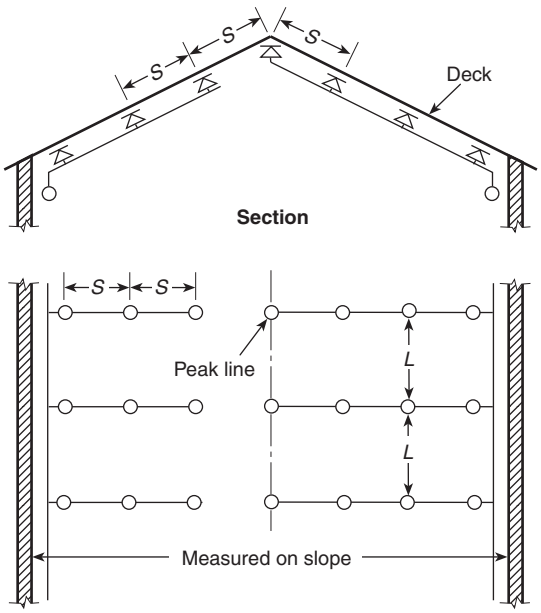

FIGURE 12.1.7.5(a) Maximum Distance Between Sprinklers with Sloped Ceilings — Arrangement A.

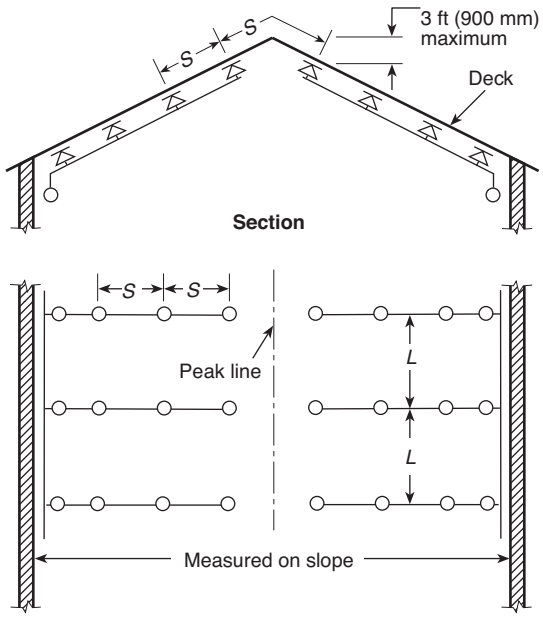

FIGURE 12.1.7.5(b) Maximum Distance Between Sprinklers with Sloped Ceilings — Arrangement B.

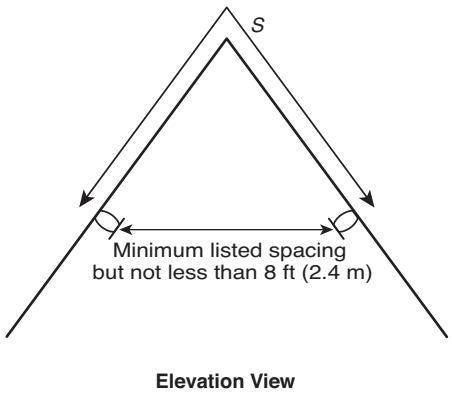

FIGURE 12.1.7.6(a) Minimum Distance Between Sprinklers with Sloped Ceilings — Arrangement A.

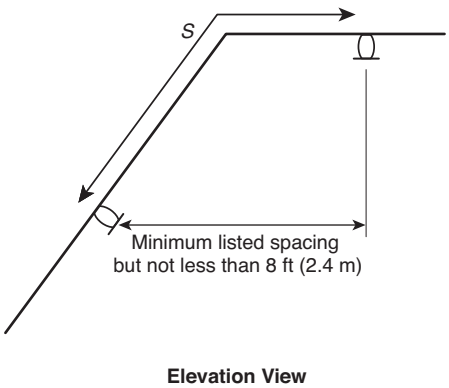

FIGURE 12.1.7.6(b) Minimum Distance Between Sprinklers with Sloped Ceilings — Arrangement B.

12.1.8 Deflector Position from Ceilings and Walls.

12.1.8.1 Pendent and upright sprinklers shall be positioned so that the deflectors are 1 in. to 4 in. (25 mm to 100 mm) from the ceiling unless the listing allows a greater distance.

N **12.1.8.1.1** Pendent and upright sprinklers installed under beamed or beamed and sloped ceilings shall be permitted to be installed where all of the following apply:

(1) Maximum beam depth of 14 in. (350 mm)
(2) Maximum ceiling height of 24 ft (7.3 m)
(3) Maximum ceiling slope of 8 in 12
(4) Maximum compartment size of 600 ft^2 (56 m^2)

EDUFIRE.IR

The criteria found in 12.1.8.1.1 and 12.1.8.1.2 provide guidance on how to place residential sprinklers on or adjacent to beams and is consistent with similar language found in both NFPA 13D and NFPA 13R.

N **12.1.8.1.2** Pendent-type residential sprinklers located under or adjacent to beams shall be installed in accordance with one of the following:

(1) Pendent, recessed pendent, and flush-type pendent sprinklers shall be permitted to be installed directly under a beam having a maximum depth of 14 in. (350 mm) with the sprinkler deflector 1 in. to 2 in. (25 mm to 50 mm) below the beam, or in accordance with the manufacturer's instructions for recessed or flush sprinklers if the deflector is less than 1 in. (25 mm) below the beam, as shown in Figure 12.1.8.1.2(a).

(2) Pendent sprinklers shall be permitted to be installed adjacent to beams where the vertical centerline of the sprinkler is no greater than 2 in. (50 mm) from the edge of the beam and with the sprinkler deflector 1 in. to 2 in. (25 mm to 50 mm) below the beam, or in accordance with the manufacturer's instructions for flush sprinklers if the deflector is less than 1 in. (25 mm) below the beam, as shown in Figure 12.1.8.1.2(b).

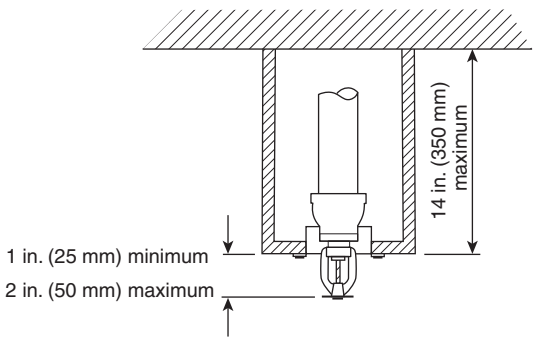

FIGURE 12.1.8.1.2(a) *Position of Sprinkler Under Beam.*

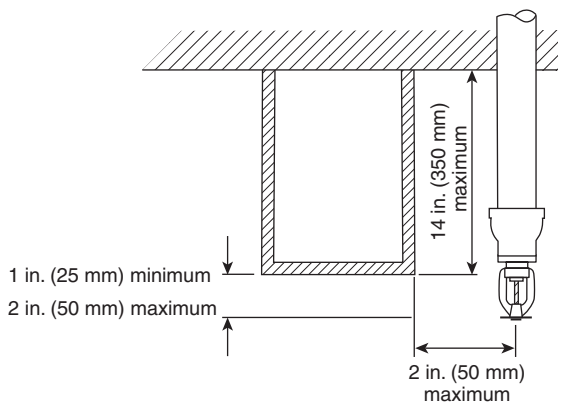

FIGURE 12.1.8.1.2(b) *Position of Sprinkler Adjacent to Beam.*

N **12.1.8.1.3** Concealed sprinklers shall be permitted to be installed in beams not greater than 4 in. (100 mm) in depth.

Current data on the impact beams might have on concealed sprinkler activation time are limited. Preliminary evidence under steeply pitched ceilings suggests that placement on the bottom of a beam leads to faster activation times compared with placement in the bay between beams. Further study is necessary before residential concealed sprinklers are allowed in deeper beams.

12.1.8.1.4 The highest sprinkler in the compartment shall be above all openings from the compartment into any communicated spaces.

12.1.8.2 Sidewall sprinklers shall be positioned so that the deflectors are within 4 in. to 6 in. (100 mm to 150 mm) from the ceiling unless the listing allows greater distances.

12.1.8.3 Where soffits used for the installation of sidewall sprinklers exceed 8 in. (200 mm) in width or projection from the wall, additional sprinklers shall be installed below the soffit.

One of the requirements of residential sprinklers is that the sprinklers provide adequate wetting of the walls. Where residential sidewall sprinklers are installed in soffits to protect a dwelling unit and the soffit is wider than 8 in. (200 mm), a residential sprinkler must also be provided beneath the soffit so that the required wall wetting is achieved.

EDUFIRE.IR

12.1.8.4 Residential horizontal sidewall sprinkler deflectors shall be located no more than 6 in. (150 mm) from the wall on which they are mounted unless listed for greater distances.

12.1.8.5 The distance from sprinklers to the end walls shall not exceed one-half of the allowable distance permitted between sprinklers as indicated in the sprinkler listing.

12.1.8.6 Minimum Distance from Walls.

12.1.8.6.1 Sprinklers shall be located a minimum of 4 in. (100 mm) from an end wall.

12.1.8.7 Deflector Orientation (Residential Upright and Pendent Spray).

12.1.8.7.1 Unless the requirements of 12.1.8.7.2 or 12.1.8.7.3 are met, deflectors of upright and pendent sprinklers shall be aligned parallel to ceilings, roofs, or the incline of stairs.

12.1.8.7.2 Where upright or pendent sprinklers are installed at the peak below a sloped ceiling or roof surface, the sprinkler shall be installed with the deflector horizontal.

12.1.8.7.3 Roofs and ceilings having a pitch not exceeding 2 in 12 (16.7 percent) are considered horizontal in the application of 12.1.8.7, and upright and pendent sprinklers shall be permitted to be installed with deflectors horizontal.

12.1.9 Residential sprinklers installed in conformance with this standard shall follow the sprinkler obstruction rules of 12.1.10 or 12.1.11 as appropriate for their installation orientation (upright, pendent, or sidewall) and the obstruction criteria specified in the manufacturer's installation instructions.

The obstruction requirements for residential upright and pendent spray sprinklers are the same as those for extended coverage upright and pendent spray sprinklers and have been duplicated in 12.1.10 to provide the needed design criteria for residential upright and pendent spray sprinklers. For additional information, see the commentary following Section 11.2.

12.1.10 Obstructions to Sprinkler Discharge (Residential Upright and Pendent Spray Sprinklers).

12.1.10.1 Performance Objective.

12.1.10.1.1 Sprinklers shall be located so as to minimize obstructions to discharge as defined in 12.1.10.2 and 12.1.10.3, or additional sprinklers shall be provided to ensure adequate coverage of the hazard.

12.1.10.1.2 Sprinklers shall be arranged to comply with one of the following arrangements:

(1) Sprinklers shall be in accordance with 9.5.5.2, Table 12.1.10.1.2, and Figure 12.1.10.1.2(a).
(2) Sprinklers shall be permitted to be spaced on opposite sides of obstructions not exceeding 4 ft (1.2 m) in width, provided the distance from the centerline of the obstruction to the sprinklers does not exceed one-half the allowable distance permitted between sprinklers.
(3) Obstructions located against the wall and that are not over 30 in. (750 mm) in width shall be permitted to be protected in accordance with Figure 12.1.10.1.2(b).
(4) Obstructions that are located against the wall and that are not over 24 in. (600 mm) in width shall be permitted to be protected in accordance with Figure 12.1.10.1.2(c). The maximum distance between the sprinkler and the wall shall be measured from the sprinkler to the wall behind the obstruction and not to the face of the obstruction.

12.1.10.2 Obstructions to Sprinkler Discharge Pattern Development.

12.1.10.2.1 General.

12.1.10.2.1.1 Continuous or noncontinuous obstructions less than or equal to 18 in. (450 mm) below the sprinkler deflector that prevent the pattern from fully developing shall comply with 12.1.10.2.

12.1.10.2.1.2 Regardless of the rules of this section, solid continuous obstructions shall meet the applicable requirements of 12.1.10.1.2.

EDUFIRE.IR

TABLE 12.1.10.1.2 *Positioning of Sprinklers to Avoid Obstructions to Discharge (Residential Upright and Pendent Spray Sprinklers)*

Distance from Sprinklers to Side of Obstruction (A)	***Maximum Allowable Distance of Deflector Above Bottom of Obstruction (B) [in. (mm)]***
Less than 1 ft (300 mm)	0 (0)
1 ft (300 mm) to less than 1 ft 6 in. (450 mm)	0 (0)
1 ft 6 in. (450 mm) to less than 2 ft (600 mm)	1 (25)
2 ft (600 mm) to less than 2 ft 6 in. (750 mm)	1 (25)
2 ft 6 in. (750 mm) to less than 3 ft (900 mm)	1 (25)
3 ft (900 mm) to less than 3 ft 6 in. (1.1 m)	3 (75)
3 ft 6 in. (1.1 m) to less than 4 ft (1.2 m)	3 (75)
4 ft (1.2 m) to less than 4 ft 6 in. (1.4 m)	5 (125)
4 ft 6 in. (1.4 m) to less than 5 ft (1.5 m)	7 (175)
5 ft (1.5 m) to less than 5 ft 6 in. (1.7 m)	7 (175)
5 ft 6 in. (1.7 m) to less than 6 ft (1.8 m)	7 (175)
6 ft (1.8 m) to less than 6 ft 6 in. (2.0 m)	9 (225)
6 ft 6 in. (2.0 m) to less than 7 ft (2.1 m)	11 (275)
7 ft (2.1 m) and greater	14 (350)

Note: For *A* and *B*, refer to Figure 12.1.10.1.2(a).

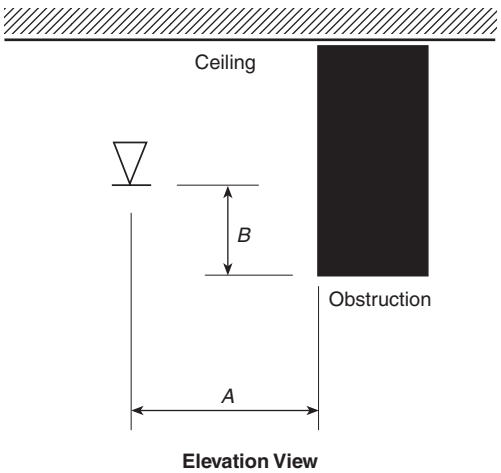

FIGURE 12.1.10.1.2(a) *Positioning of Sprinkler to Avoid Obstruction to Discharge (Residential Upright and Pendent Spray Sprinklers).*

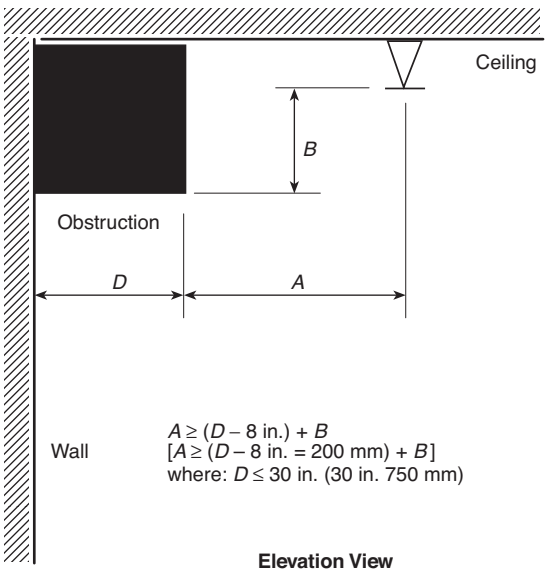

FIGURE 12.1.10.1.2(b) *Obstructions Against Wall (Residential Upright and Pendent Spray Sprinklers).*

12.1.10.2.1.3* Unless the requirements of 12.1.10.2.1.4 through 12.1.10.2.1.8 are met, sprinklers shall be positioned away from obstructions a minimum distance of four times the maximum dimension of the obstruction (e.g., truss webs and chords, pipe, columns, and fixtures) in accordance with Figure 12.1.10.2.1.3(a) and Figure 12.1.10.2.1.3(b).

(A) The maximum clear distance required to obstructions in the horizontal orientation (e.g., light fixture and truss chords) shall be 36 in. (900 mm).

(B) The maximum clear distance shall not be applied to obstructions in the vertical orientation (e.g., columns).

EDUFIRE.IR

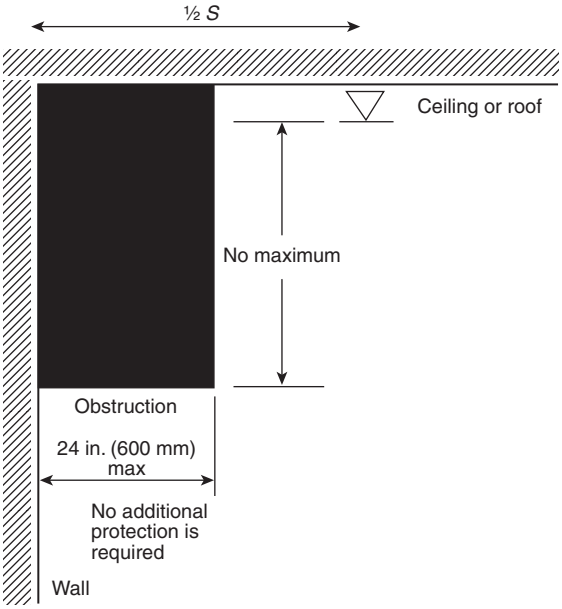

FIGURE 12.1.10.1.2(c) *Obstructions Against Wall (Measurements for Residential Upright and Pendent Spray Sprinklers).*

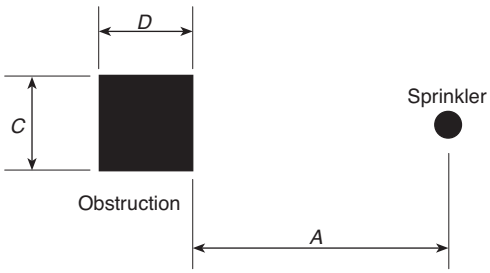

Plan View of Column
(Obstruction in vertical orientation)

$A \geq 4C$ or $4D$
(Use dimension C or D, whichever is greater)

FIGURE 12.1.10.2.1.3(a) *Minimum Distance from an Obstruction in the Vertical Orientation (Residential Upright and Pendent Spray Sprinkler).*

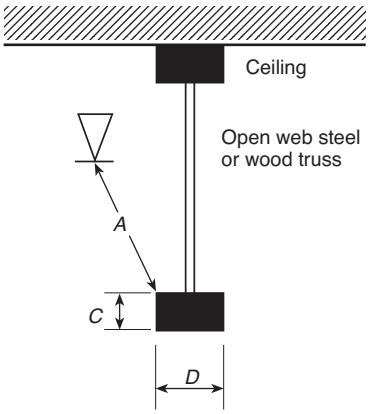

Elevation View of Truss
(Obstruction in horizontal orientation)

$A \geq 4C$ or $4D$
$A \leq 36$ in. (900 mm)
(Use dimension C or D, whichever is greater)

FIGURE 12.1.10.2.1.3(b) *Minimum Distance from an Obstruction in the Horizontal Orientation (Residential Upright and Pendent Spray Sprinkler).*

EDUFIRE.IR

A.12.1.10.2.1.3 The rules of 12.1.10.2.1.3 (known as the "Four Times Rule") have been written to apply to obstructions where the sprinkler can be expected to get water to both sides of the obstruction without allowing a significant dry shadow on the other side of the obstruction. This works for small noncontinuous obstructions and for continuous obstructions where the sprinkler can throw water over and under the obstruction, such as the bottom chord of an open truss or joist. For solid continuous obstructions, such as a beam, the Four Times Rule is ineffective since the sprinkler cannot throw water over and under the obstruction. Sufficient water must be thrown under the obstruction to adequately cover the floor area on the other side of the obstruction. To ensure this, compliance with the rules of 12.1.10.1.2 is necessary.

12.1.10.2.1.4 Sprinklers shall be permitted to be spaced on opposite sides of the obstruction where the distance from the centerline of the obstruction to the sprinklers does not exceed one-half the allowable distance between sprinklers.

12.1.10.2.1.5 Sprinklers shall be permitted to be located one-half the distance between the obstructions where the obstruction consists of open trusses 20 in. (500 mm) or greater apart [24 in. (600 mm) on center], provided that all truss members are not greater than 4 in. (100 mm) (nominal) in width and web members do not exceed 1 in. (25 mm) in width.

12.1.10.2.1.6 Sprinklers shall be permitted to be installed on the centerline of a truss or bar joist or directly above a beam provided that the truss chord or beam dimension is not more than 8 in. (200 mm) and the sprinkler deflector is located at least 6 in. (150 mm) above the structural member and where the sprinkler is positioned at a distance four times greater than the maximum dimension of the web members away from the web members.

12.1.10.2.1.7 The requirements of 12.1.10.2.1.3 shall not apply to sprinkler system piping less than 3 in. (80 mm) in diameter.

12.1.10.2.1.8 The requirements of 12.1.10.2.1.3 shall not apply to sprinklers positioned with respect to obstructions in accordance with 12.1.10.1.2.

12.1.10.2.1.9* Sprinklers shall be permitted to be placed without regard to the blades of a ceiling fan, provided the plan view of the fan is at least 50 percent open.

Just as for other types of sprinklers, the blades on small fans less than 60 in. (1.5 m) in diameter are not considered obstructions if they are 50 percent open. For more information, see the commentary following 10.2.7.2.1.10.

A.12.1.10.2.1.9 The housing unit of the ceiling fan is expected to be addressed by the Three Times Rule or the Four Times Rule.

12.1.10.2.2 Suspended or Floor-Mounted Vertical Obstructions. The distance from sprinklers to privacy curtains, free-standing partitions, room dividers, and similar obstructions shall be in accordance with Table 12.1.10.2.2 and Figure 12.1.10.2.2.

TABLE 12.1.10.2.2 *Suspended or Floor-Mounted Obstructions (Residential Upright and Pendent Spray Sprinklers)*

Horizontal Distance (A)	*Minimum Vertical Distance Below Deflector (B) [in. (mm)]*
6 in. (150 mm) or less	3 (75)
More than 6 in. (150 mm) to 9 in. (225 mm)	4 (100)
More than 9 in. (225 mm) to 12 in. (300 mm)	6 (150)
More than 12 in. (300 mm) to 15 in. (375 mm)	8 (200)
More than 15 in. (375 mm) to 18 in. (450 mm)	9½ (240)
More than 18 in. (450 mm) to 24 in. (600 mm)	12½ (315)
More than 24 in. (600 mm) to 30 in. (750 mm)	15½ (390)
More than 30 in. (750 mm)	18 (450)

Note: For *A* and *B*, refer to Figure 12.1.10.2.2.

EDUFIRE.IR

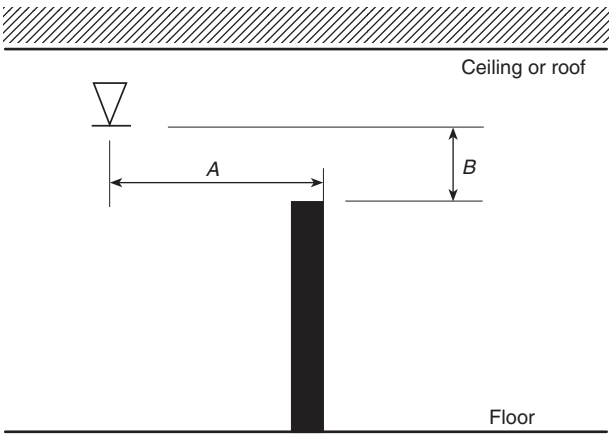

FIGURE 12.1.10.2.2 *Suspended or Floor-Mounted Obstruction (Residential Upright and Pendent Spray Sprinklers).*

N **12.1.10.2.3* Shadow Areas.** Shadow areas created by walls and partitions shall be permitted in the protection area of a sprinkler as long as the cumulative dry areas do not exceed 15 ft^2 (1.4 m^2) per sprinkler.

The concept of *shadow area* was introduced in the 2013 editions of NFPA 13D and NFPA 13R. Shadow areas are the sections of floor area obstructed from sprinkler discharge that remain relatively dry. If shadow areas reach a certain size, concerns arise regarding the sprinkler system's ability to control a fire. Therefore, limits are placed on the size of the shadow area.

ASK THE AHJ

How does the authority having jurisdiction measure the shadow area to verify whether it is within the limitations of 12.1.10.2.3?

The shadow area is measured using a plan view drawing in which the arrangement is viewed from above. In the plan view, a line is drawn from the center of the sprinkler to the outer edge of the obstructing wall or partition. The area on the opposite side of the wall or partition from the sprinkler and bounded by the drawn line is the shadow area. If the obstruction is a building column or other obstruction behind which the sprinkler discharge will reach on both sides, two lines must be drawn. Each line goes from the center of the sprinkler, with one line going through the outside edge on the left side of the obstruction and the other line going through the outside edge on the right side of the obstruction. The shadow area is the area behind the obstruction that is bounded by the two lines.

N **A.12.1.10.2.3** See A.9.1.1(3), Figure A.9.1.1(3)(a), and Figure A.9.1.1(3)(b).

12.1.10.3* Obstructions that Prevent Sprinkler Discharge from Reaching Hazard.

A.12.1.10.3 See A.9.5.5.3.

12.1.10.3.1 Continuous or noncontinuous obstructions that interrupt the water discharge in a horizontal plane more than 18 in. (450 mm) below the sprinkler deflector in a manner to limit the distribution from reaching the protected hazard shall comply with 12.1.10.3.

12.1.10.3.2 Sprinklers shall be installed under fixed obstructions over 4 ft (1.2 m) wide.

12.1.10.3.3 Sprinklers installed under open gratings shall be shielded from the discharge of overhead sprinklers.

EDUFIRE.IR

CLOSER LOOK [12.1.10.2.3]

Shadow Areas

The shadow area concept is based on the effect of the "Three Times Rule" and refers to the maximum size of the floor area that will not receive the direct application of water due to obstructions. Additionally, it addresses dry areas that are created by obstructions other than columns and bottom chords of truss webs, such as walls and other partitions. (See 13.2.8.2.1.3 and A.13.2.8.2.1.3.)

Although not explicitly quantified, shadow or dry areas are permitted by NFPA 13 through the application of the Three Times Rule. According to this provision, sprinklers can be placed a minimum distance equal to three times the width of certain obstructions, such as columns or the bottom of bar joists, so that sufficient sprinkler discharge can be sprayed around the obstruction and reach the other side of the obstruction. However, even where the Three Times Rule is applied, a certain size of floor area behind the obstruction will be blocked from the intended sprinkler discharge and will remain dry.

The size limitation of 15 ft^2 (1.4 m^2) was determined in sprinkler discharge testing in which a pendent sprinkler was placed in the center of a 15 ft × 15 ft (4.6 m × 4.6 m) room with an 8 in. (200 mm) wide column located 24 in. (610 mm) from the sprinkler. This positioning is consistent with the Three Times Rule provisions for standard spray sprinklers. The results of the testing indicated a dry area of approximately 15 ft^2 (1.4 m^2) behind the column. It was argued that if this size dry area provided for intended sprinkler system performance, it should be applied to other types of obstructions such as walls and partitions.

The cumulative 15 ft^2 (1.4 m^2) shadow area limit is to be applied to each individual sprinkler in the dwelling. This rule is not to be interpreted as allowing for 15 ft^2 (1.4 m^2) for each obstruction that a given sprinkler might be exposed to. Rather, the shadow areas created by all obstructions to a single sprinkler cannot exceed 15 ft^2 (1.4 m^2). Where such conditions exist, additional sprinklers are to be installed to decrease the size of the shadow area.

The Annex A material accompanying 12.1.10.2.3 directs the reader to Chapter 9 for examples of shadow areas. Sprinkler response and water distribution tests were conducted on a variety of shadow area situations and, as discussed above, indicated that shadow areas limited to a certain size [15 ft^2 (1.4 m^2) per sprinkler] are not problematic with respect to sprinkler performance. The test results also indicate a correlation of sprinkler performance, size of the shadow area, and size of the compartment. It is generally determined that larger shadow areas could be accommodated in smaller rooms without detrimental effects on sprinkler performance. However, without a more in-depth examination being conducted, NFPA 13 limits shadow areas to 15 ft^2 (1.4 m^2) per sprinkler.

12.1.11 Obstructions to Sprinkler Discharge (Residential Sidewall Spray Sprinklers).

The obstruction requirements for residential sidewall spray sprinklers are the same as those for extended coverage sidewall spray sprinklers and have been duplicated in 12.1.11 to provide the needed design criteria for residential sidewall spray sprinklers. For additional information, see the commentary accompanying Section 11.3.

12.1.11.1 Performance Objective.

12.1.11.1.1 Sprinklers shall be located so as to minimize obstructions to discharge as defined in 9.5.5.2 and 9.5.5.3, or additional sprinklers shall be provided to ensure adequate coverage of the hazard.

12.1.11.1.2 Sidewall sprinklers shall not be installed less than 8 ft (2.4 m) from light fixtures or similar obstructions unless the requirements of 12.1.11.1.2.1 or 12.1.11.1.2.2 are met.

N **12.1.11.1.2.1** For obstructions such as light fixtures, where the greatest dimension of the obstruction is less than 2 ft (0.6 m), sidewall sprinklers shall be permitted to be installed at a minimum distance of four times the greatest dimension.

N **12.1.11.1.2.2** For obstructions located at least 4 in. (100 mm) above the plane of the sprinkler deflector, the sprinkler shall be permitted to be located less than 8 ft (2.4 m) from the obstruction.

N **12.1.11.1.3** The distance between light fixtures or similar obstructions located 8 ft (2.4 m) or greater from the sprinkler shall be in conformance with Table 12.1.11.1.3 and Figure 12.1.11.1.3.

EDUFIRE.IR

TABLE 12.1.11.1.3 *Positioning of Sprinklers to Avoid Obstructions (Residential Sidewall Sprinklers)*

Distance from Sidewall Sprinkler to Side of Obstruction (A)	***Maximum Allowable Distance of Deflector Above Bottom of Obstruction (B) [in. (mm)]***
8 ft (2.4 m) to less than 10 ft (3.0 m)	1 (25)
10 ft (3.0 m) to less than 11 ft (3.3 m)	2 (50)
11 ft (3.3 m) to less than 12 ft (3.7 m)	3 (75)
12 ft (3.7 m) to less than 13 ft (4.0 m)	4 (100)
13 ft (4.0 m) to less than 14 ft (4.3 m)	6 (150)
14 ft (4.3 m) to less than 15 ft (4.6 m)	7 (175)
15 ft (4.6 m) to less than 16 ft (4.9 m)	9 (225)
16 ft (4.9 m) to less than 17 ft (5.2 m)	11 (275)
17 ft (5.2 m) or greater	14 (350)

Note: For *A* and *B*, refer to Figure 12.1.11.1.3.

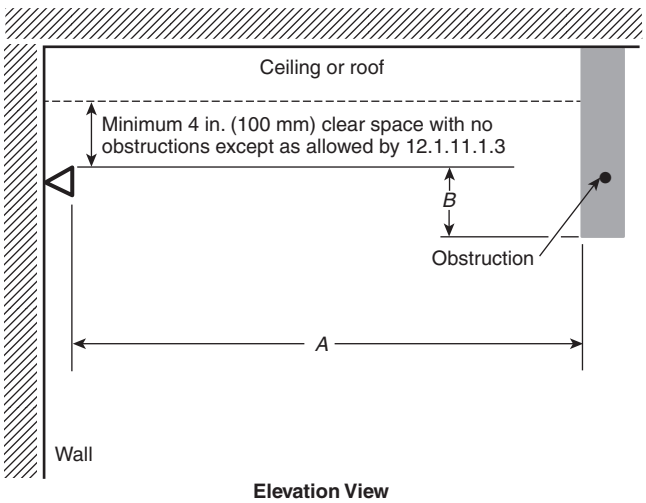

FIGURE 12.1.11.1.3 *Positioning of Sprinkler to Avoid Obstruction (Residential Sidewall Sprinklers).*

12.1.11.1.4 Continuous obstructions projecting from the same wall as the one on which the sidewall sprinkler is mounted shall be in accordance with one of the following arrangements:

(1) Sprinklers shall be in accordance with Table 12.1.11.1.4 and Figure 12.1.11.1.4(a).
(2) Sprinklers shall be permitted to be spaced on opposite sides of obstructions less than 4 ft (1.2 m) in width where the distance from the centerline of the obstruction to the sprinklers does not exceed one-half the allowable distance between sprinklers.
(3) Obstructions located against the wall and that are not over 30 in. (750 mm) in width shall be permitted to be protected in accordance with Figure 12.1.11.1.4(b).
(4) Obstructions located against the wall and that are not over 24 in. (600 mm) in width shall be permitted to be protected in accordance with Figure 12.1.11.1.4(c). The maximum distance between the sprinkler and the wall shall be measured from the sprinkler to the wall behind the obstruction and not to the face of the obstruction.

The spray patterns of sidewall sprinklers are different from the spray patterns of upright and pendant sprinklers, extending out from the wall and extending along the wall. Table 12.1.11.1.4 provides guidance relative to sprinkler placement and with respect to obstructions located along the same wall. Table 12.1.11.1.3 should be used regarding obstructions in the ceiling away from the wall.

EDUFIRE.IR

TABLE 12.1.11.1.4 *Positioning of Sprinklers to Avoid Obstructions Along Wall (Residential Sidewall Sprinklers)*

Distance from Sidewall Sprinkler to Side of Obstruction (A)	*Maximum Allowable Distance of Deflector Above Bottom of Obstruction (B) [in. (mm)]*
Less than 1 ft 6 in. (450 mm)	0 (0)
1 ft 6 in. (450 mm) to less than 3 ft (900 mm)	1 (25)
3 ft (900 mm) to less than 4 ft (1.2 m)	3 (75)
4 ft (1.2 m) to less than 4 ft 6 in. (1.4 m)	5 (125)
4 ft 6 in. (1.4 m) to less than 6 ft (1.8 m)	7 (175)
6 ft (1.8 m) to less than 6 ft 6 in. (2.0 m)	9 (225)
6 ft 6 in. (2.0 m) to less than 7 ft (2.1 m)	11 (275)
7 ft (2.1 m) to less than 7 ft 6 in. (2.3 m)	14 (350)

Note: For *A* and *B*, refer to Figure 12.1.11.1.4(a).

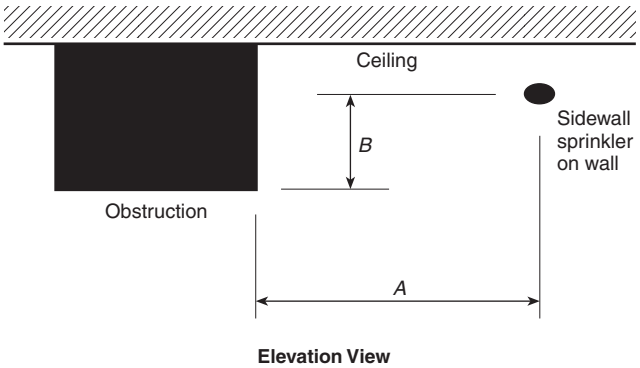

FIGURE 12.1.11.1.4(a) *Positioning of Sprinkler to Avoid Obstruction Along Wall (Residential Sidewall Sprinklers).*

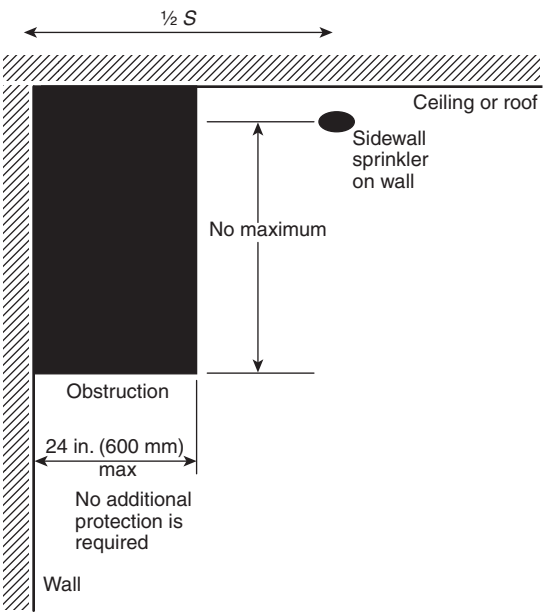

FIGURE 12.1.11.1.4(c) *Obstruction Against Wall (Residential Sidewall Spray Sprinklers).*

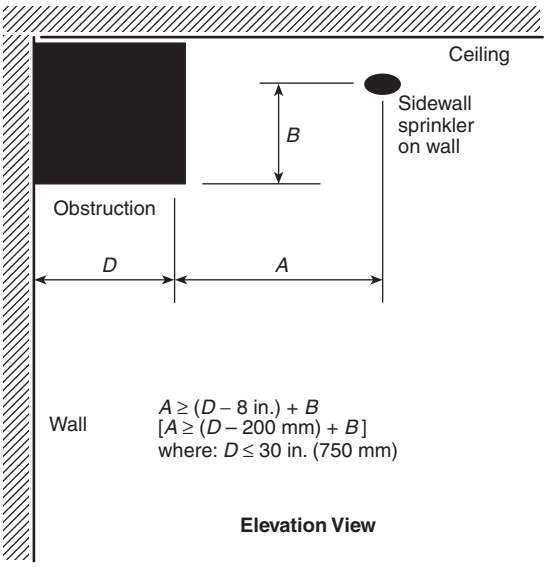

FIGURE 12.1.11.1.4(b) *Obstruction Against Wall (Residential Sidewall Spray Sprinklers).*

EDUFIRE.IR

FAQ [12.1.11.1.5]

Is sprinkler protection required under kitchen cabinets?

As stated in A.12.1.11.1.5, it is not the intent of NFPA 13 to require sprinklers under kitchen cabinets.

12.1.11.1.5* Soffits and Cabinets. Where soffits are used for the installation of sidewall sprinklers, the sprinklers and soffits shall be installed in accordance with 12.1.11.1.5.1, 12.1.11.1.5.2, or 12.1.11.1.5.3.

Paragraph 12.1.11.1.5 provides guidance for the placement of residential sprinklers where kitchen cabinets, soffits, or other fixtures hang from the wall. The rules are based on fire and distribution testing done by the National Fire Sprinkler Association (NFSA). Pendent sprinklers located in the ceiling are the most effective option and are preferred where practical. Sidewall sprinklers installed on the opposite wall are also a good protection option. Sidewall sprinklers located on the same wall as the cabinet can be expected to provide adequate protection if installed in accordance with 12.1.11.1.5 but are the least desirable of the three alternatives.

A.12.1.11.1.5 The requirements in 12.1.11.1.5 were developed from years of experience with NFPA 13 obstruction requirements and an additional test series conducted by the National Fire Sprinkler Association with the help of Tyco International (Valentine and Isman, *Kitchen Cabinets and Residential Sprinklers*, National Fire Sprinkler Association, November 2005), which included fire modeling, distribution tests, and full-scale fire tests. The test series showed that pendent sprinklers definitely provide protection for kitchens, even for fires that start under the cabinets. The information in the series was less than definitive for sidewall sprinklers, but distribution data shows that sprinklers in the positions in this standard provide adequate water distribution in front of the cabinets and that sidewall sprinklers should be able to control a fire that starts under the cabinets. When protecting kitchens or similar rooms with cabinets, the pendent sprinkler should be the first option. If pendent sprinklers cannot be installed, the next best option is a sidewall sprinkler on the opposite wall from the cabinets, spraying in the direction of the cabinets. The third best option is the sidewall sprinkler on the same wall as the cabinets on a soffit flush with the face of the cabinet. The last option should be putting sprinklers on the wall back behind the face of the cabinet because this location is subject to being blocked by items placed on top of the cabinets. It is not the intent of the committee to require sprinklers under kitchen cabinets.

12.1.11.1.5.1 Where soffits exceed more than 8 in. (200 mm) in width or projection from the wall, pendent sprinklers shall be installed under the soffit.

12.1.11.1.5.2 Sidewall sprinklers shall be permitted to be installed in the face of a soffit located directly over cabinets, without requiring additional sprinklers below the soffit or cabinets, where the soffit does not project horizontally more than 12 in. (300 mm) from the wall.

12.1.11.1.5.3 Where sidewall sprinklers are more than 3 ft (900 mm) above the top of cabinets, the sprinkler shall be permitted to be installed on the wall above the cabinets where the cabinets are no greater than 12 in. (300 mm) from the wall.

12.1.11.1.6* Obstructions on the wall opposite from the sidewall sprinkler shall be permitted where the obstruction is up to 2 ft (600 mm) deep and 2 ft (600 mm) wide.

A.12.1.11.1.6 See Figure A.12.1.11.1.6.

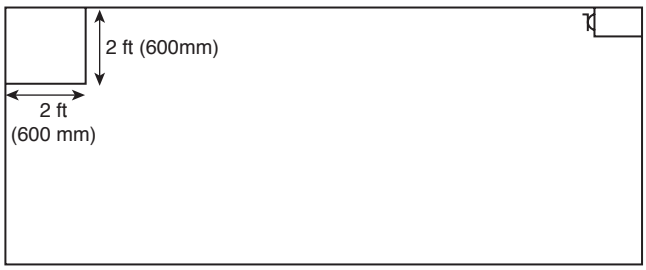

FIGURE A.12.1.11.1.6 *Permitted Obstruction on Wall Opposite Residential Sidewall Sprinkler.*

EDUFIRE.IR

12.1.11.2 Obstructions to Sprinkler Discharge Pattern Development.

12.1.11.2.1 General.

12.1.11.2.1.1 Continuous or noncontinuous obstructions less than or equal to 18 in. (450 mm) below the sprinkler deflector that prevent the pattern from fully developing shall comply with this section.

12.1.11.2.1.2 Regardless of the rules of this section, solid continuous obstructions shall meet the requirements of 12.1.11.1.2 and 12.1.11.1.3.

12.1.11.2.1.3* Unless the requirements of 12.1.11.2.1.4 through 12.1.11.2.1.7 are met, sprinklers shall be positioned away from obstructions a minimum distance of four times the maximum dimension of the obstruction (e.g., truss webs and chords, pipe, columns, and fixtures).

(A) The maximum clear distance required from obstructions in the horizontal orientation (e.g., light fixtures and truss chords) shall be 36 in. (900 mm).

(B) The maximum clear distance shall not be applied to obstructions in the vertical orientation (e.g., columns).

A.12.1.11.2.1.3 The rules of 12.1.11.2.1.3 (known as the Four Times Rule) have been written to apply to obstructions where the sprinkler can be expected to get water to both sides of the obstruction without allowing a significant dry shadow on the other side of the obstruction. This works for small noncontinuous obstructions and for continuous obstructions where the sprinkler can throw water over and under the obstruction, such as the bottom chord of an open truss or joist. For solid continuous obstructions, such as a beam, the Four Times Rule is ineffective since the sprinkler cannot throw water over and under the obstruction. Sufficient water must be thrown under the obstruction to adequately cover the floor area on the other side of the obstruction. To ensure this, compliance with the rules of 12.1.10.1.2 is necessary.

12.1.11.2.1.4 Sidewall sprinklers shall be positioned in accordance with Figure 12.1.11.2.1.4(a) and Figure 12.1.11.2.1.4(b) when obstructions are present.

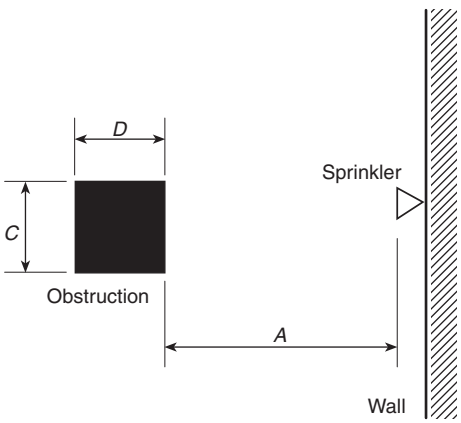

Plan View of Column
(Obstruction in vertical orientation)
$A \geq 4C$ or $4D$
(Use dimension C or D, whichever is greater)

FIGURE 12.1.11.2.1.4(a) Minimum Distance from an Obstruction in the Vertical Orientation (Residential Sidewall Sprinkler).

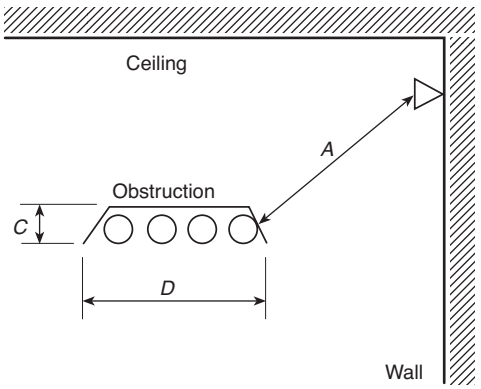

Elevation View of Pipe Conduit or Light Fixture
(Obstruction in horizontal orientation)
$A \geq 4C$ or $4D$
$A \leq 36$ in. (900 mm)
(Use dimension C or D, whichever is greater)

FIGURE 12.1.11.2.1.4(b) Minimum Distance from an Obstruction in the Horizontal Orientation (Residential Sidewall Sprinkler).

EDUFIRE.IR

12.1.11.2.1.5 The requirements of 12.1.11.2.1.3 and 12.1.11.2.1.4 shall not apply where sprinklers are positioned with respect to obstructions in accordance with 12.1.11.1.2 and 12.1.11.1.3.

12.1.11.2.1.6 The requirements of 12.1.11.2.1.3 shall not apply to sprinkler system piping less than 3 in. (80 mm) in diameter.

12.1.11.2.1.7* Sprinklers shall be permitted to be placed without regard to the blades of a ceiling fan, provided the plan view of the fan is at least 50 percent open.

A.12.1.11.2.1.7 The housing unit of the ceiling fan is expected to be addressed by the Four Times Rule.

12.1.11.2.2* Suspended or Floor-Mounted Vertical Obstructions. The distance from sprinklers to privacy curtains, free-standing partitions, room dividers, and similar obstructions shall be in accordance with Table 12.1.11.2.2, Figure 12.1.11.2.2(a), and Figure 12.1.11.2.2(b).

TABLE 12.1.11.2.2 *Suspended or Floor-Mounted Obstructions (Residential Sidewall Sprinklers)*

Horizontal Distance (A)	*Minimum Allowable Distance Below Deflector (B) [in. (mm)]*
6 in. (150 mm) or less	3 (75)
More than 6 in. (150 mm) to 9 in. (225 mm)	4 (100)
More than 9 in. (225 mm) to 12 in. (300 mm)	6 (150)
More than 12 in. (300 mm) to 15 in. (375 mm)	8 (200)
More than 15 in. (375 mm) to 18 in. (450 mm)	9½ (240)
More than 18 in. (450 mm) to 24 in. (600 mm)	12½ (315)
More than 24 in. (600 mm) to 30 in. (750 mm)	15½ (390)
More than 30 in. (750 mm)	18 (450)

For SI units, 1 in. = 25.4 mm.

Note: For *A* and *B*, refer to Figure 12.1.11.2.2.

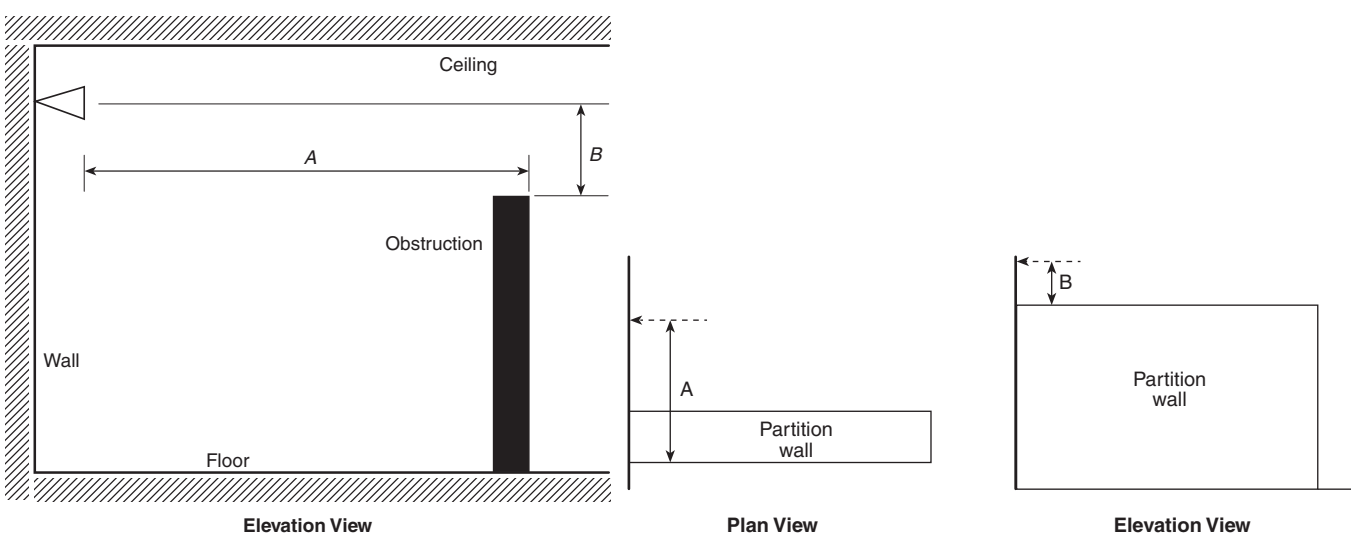

FIGURE 12.1.11.2.2(a) *Suspended or Floor-Mounted Obstruction (Residential Sidewall Sprinklers).*

FIGURE 12.1.11.2.2(b) *Suspended or Floor-Mounted Obstructions (Residential Sprinklers).*

EDUFIRE.IR

N **A.12.1.11.2.2** Floor-mounted obstructions can be parallel or perpendicular to the wall with the sidewall sprinkler.

12.1.11.3* Obstructions that Prevent Sprinkler Discharge from Reaching Hazard.

A.12.1.11.3 See A.9.5.5.3.

12.1.11.3.1 Continuous or noncontinuous obstructions that interrupt the water discharge in a horizontal plane more than 18 in. (450 mm) below the sprinkler deflector in a manner to limit the distribution from reaching the protected hazard shall comply with this section.

12.1.11.3.2* Sprinklers shall be installed under fixed obstructions over 4 ft (1.2 m) wide.

Residential sprinklers, like other sprinklers, can be affected by obstructions located completely below the sprinklers. As with other types of sprinklers, obstructions over 4 ft (1.2 m) in width, such as stair landings or ducts, require a sprinkler below them.

N **A.12.1.11.3.2** When obstructions are located more than 18 in. (450 mm) below the sprinkler deflector, an adequate spray pattern develops and obstructions up to and including 4 ft (1.2 m) wide do not require additional protection underneath. Examples are ducts, stairs, landings, and other similar obstructions.

12.1.11.3.3 Sprinklers installed under open gratings shall be shielded from the discharge of overhead sprinklers.

12.1.11.3.4 The deflector of automatic sprinklers installed under fixed obstructions shall be positioned below the bottom of the obstruction in accordance with their listed distance below ceilings.

12.1.11.3.5 Sprinklers installed under round ducts shall be shielded from the discharge of overhead sprinklers.

12.1.12 Ceiling Pockets.

12.1.12.1 Sprinklers shall be required in all ceiling pockets.

12.1.12.2 The requirement of 12.1.12.1 shall not apply where all of the following requirements are met:

(1) The total volume of the unprotected ceiling pocket does not exceed 100 ft^3 (2.8 m^3).
(2) The depth of the unprotected ceiling pocket does not exceed 12 in. (300 mm).
(3) The entire floor of the unprotected ceiling pocket is protected by the sprinklers at the lower ceiling elevation.
(4) The interior finish of the unprotected ceiling pocket is noncombustible or limited-combustible construction.

References Cited in Commentary

National Fire Protection Association, 1 Batterymarch Park, Quincy, MA 02169-7471.

NFPA 13D, *Standard for the Installation of Sprinkler Systems in One- and Two-Family Dwellings and Manufactured Homes,* 2019 edition.

NFPA 13R, *Standard for the Installation of Sprinkler Systems in Low-Rise Residential Occupancies,* 2019 edition.

Fire Protection Research Foundation, 1 Batterymarch Park, Quincy, MA 02169-7471.

Analysis of the Performance of Residential Sprinkler Systems with Sloped or Sloped and Beamed Ceilings, July 2010.

EDUFIRE.IR

EDUFIRE.IR

CHAPTER

13

Installation Requirements for CMSA Sprinklers

REORGANIZATION NOTE

The new Chapter 13 contains the specific requirements for the installation of control mode specific application (CMSA) sprinklers that were previously contained in Sections 8.4 and 8.11 of the 2016 edition. To avoid redundancy, certain provisions already contained verbatim in the new Chapter 9 have not been repeated in Chapter 13.

Many factors can influence the effectiveness of a CMSA sprinkler installation, such as the impact that construction and occupancy features have on sprinkler activation, the development of the sprinkler distribution pattern, and the presence of obstructions that could negatively impact or prevent water from reaching the hazard. The criteria found in Chapter 13 addresses the factors that must be considered for an effective CMSA installation.

N 13.1 General.

Control mode specific application (CMSA) sprinklers shall be selected for use and installation as indicated in this chapter and shall be positioned and spaced in accordance with Section 9.5.

13.2 CMSA Sprinklers.

13.2.1 General. All requirements of Section 9.5 shall apply to CMSA sprinklers except as modified in Section 13.2.

13.2.1.1 CMSA pendent sprinklers shall be installed in accordance with Section 9.5 and the manufacturer's installation instructions in lieu of the requirements in Section 13.2.

The 2010 edition introduced requirements for CMSA sprinklers. This type of sprinkler includes large drop sprinklers and other sprinklers that are similar to large drop sprinklers in their characteristics but with varying orifice sizes. CMSA sprinklers can be either upright or pendent. The installation rules are patterned after traditional large drop sprinklers, but many of the installation requirements for the new and larger K-factor CMSA sprinklers are similar to those found in Chapter 10. Where the listing of a CMSA sprinkler differs from this chapter, CMSA sprinklers should be installed in accordance with their listing.

Unless the rationale for CMSA requirements differs from those for standard upright and pendent sprinklers, commentary from related items in Chapter 10 is not repeated in Chapter 13.

13.2.2 CMSA sprinklers shall be permitted to be used in wet, dry, or preaction systems and shall be installed in accordance with their listing.

EDUFIRE.IR

13.2.3 Temperature Ratings.

13.2.3.1 Unless the requirements of 13.2.3.2, 13.2.3.3, or 13.2.3.4 are met, sprinkler temperature ratings shall be the same as those indicated in Table 9.4.2.5(a) and Table 9.4.2.5(b) or those used in large-scale fire testing to determine the protection requirements for the hazard involved.

13.2.3.2 Sprinklers of intermediate- and high-temperature ratings shall be installed in specific locations as required by 9.4.2.

13.2.3.3 In storage occupancies, ordinary, intermediate, or high temperature–rated sprinklers shall be used for wet pipe systems.

13.2.3.4 In storage occupancies, high temperature–rated sprinklers shall be used for dry pipe systems.

13.2.4 Occupancy and Hazard.

13.2.4.1 Quick-response CMSA sprinklers designed to meet any criteria in Chapter 12 through Chapter 20 shall be permitted to protect light and ordinary hazard occupancies.

13.2.4.2 Standard-response CMSA sprinklers designed to meet any criteria in Chapter 12 through Chapter 20 shall be permitted to protect ordinary hazard occupancies.

13.2.5* Protection Areas per Sprinkler (CMSA Sprinklers).

A.13.2.5 Tests involving areas of coverage over 100 ft^2 (9 m^2) for CMSA sprinklers are limited in number, and use of areas of coverage over 100 ft^2 (9 m^2) should be carefully considered.

13.2.5.1 Determination of Protection Area of Coverage. The protection area of coverage per sprinkler (A_s) shall be determined in accordance with 9.5.2.1.

13.2.5.2 Maximum Protection Area of Coverage.

13.2.5.2.1 The maximum allowable protection area of coverage for a sprinkler (A_s) shall be in accordance with the value indicated in Table 13.2.5.2.1.

TABLE 13.2.5.2.1 *Protection Areas and Maximum Spacing for CMSA Sprinklers*

	Protection Area		*Maximum Spacing*	
Construction Type	*ft^2*	*m^2*	*ft*	*m*
Noncombustible unobstructed	130	12	12	3.7
Noncombustible obstructed	130	12	12	3.7
Combustible unobstructed	130	12	12	3.7
Combustible obstructed	100	9	10	3.0
Rack storage combustible obstructed	100	9	10	3.0
Rack storage unobstructed and noncombustible obstructed	100	9	12	3.7

13.2.5.2.2 In any case, the maximum area of coverage of any sprinkler shall not exceed 130 ft^2 (12 m^2).

Maximum area of coverage is addressed in 13.2.5.2.1 and 13.2.5.2.2. Tests involving areas of coverage over 100 ft^2 (9.3 m^2) for CMSA sprinklers are limited in number. Limiting the area of coverage for CMSA sprinklers to 100 ft^2 (9 m^2) for all construction types is common practice. Careful consideration should be given when designing CMSA sprinkler installations with protection areas exceeding 100 ft^2 (9 m^2).

13.2.5.3 Minimum Protection Area of Coverage. The minimum allowable protection area of coverage for a sprinkler (A_s) shall be not less than 80 ft^2 (7.4 m^2).

EDUFIRE.IR

The minimum protection area for CMSA sprinklers, which is addressed in 13.2.5.3, is limited to 80 ft^2 (7.4 m^2) to prevent "skipping." Skipping occurs when the sprinklers do not operate in a normal pattern and when sprinklers some distance from the fire operate before those sprinklers closest to the fire. Air movement and general cooling of temperatures at the ceiling cause the skipping phenomenon. When skipping occurs, the fire continues to grow, resulting in a larger, more difficult fire to control. Limiting the sprinkler protection area, as well as the minimum distance between sprinklers as set forth in 13.2.6.4, minimizes the possibility of skipping.

13.2.6 Sprinkler Spacing (CMSA Sprinklers).

Spacing requirements for CMSA sprinklers, which are addressed in 13.2.6, were determined by testing at various sprinkler spacings and discharge pressures on the basis of the following parameters:

1. Not exceeding the maximum allowable distance between sprinklers to ensure sufficient overlapping of sprinkler discharge patterns for adequate penetration of the fire plume
2. Maintaining sufficient separation of sprinklers to prevent sprinkler skipping
3. Maintaining sufficient cooling at ceiling level

The importance of satisfying the three parameters specified cannot be overstated. These criteria are so closely intertwined that evaluating one without considering the effect on the others is difficult. Certain combinations of spacing dimensions, when used with the discharge pressures and fire hazards discussed in 13.2.6, result in skipping, loss of sprinkler water penetration, and excessively high ceiling temperatures. The occurrence of any of these adverse conditions can seriously compromise the adequacy of the sprinkler protection.

13.2.6.1* Maximum Distance Between Sprinklers.

A.13.2.6.1 It is important that sprinklers in the immediate vicinity of the fire center not skip, and this requirement imposes certain restrictions on the spacing.

13.2.6.1.1 Under unobstructed and obstructed noncombustible construction and unobstructed combustible construction, the distance between sprinklers shall be limited to not more than 12 ft (3.7 m) between sprinklers, as shown in Table 13.2.5.2.1.

13.2.6.1.2 Under obstructed combustible construction, the maximum distance shall be limited to 10 ft (3 m).

13.2.6.2 Maximum Distance from Walls. The distance from sprinklers to walls shall not exceed one-half of the allowable distance permitted between sprinklers as indicated in Table 13.2.5.2.1.

13.2.6.3 Minimum Distance from Walls. Sprinklers shall be located a minimum of 4 in. (100 mm) from a wall.

13.2.6.4 Minimum Distance Between Sprinklers. Sprinklers shall be spaced not less than 8 ft (2.4 m) on center.

13.2.7 Deflector Position (CMSA Sprinklers).

13.2.7.1* Distance Below Ceilings.

A.13.2.7.1 If all other factors are held constant, the operating time of the first sprinkler will vary exponentially with the distance between the ceiling and deflector. At distances greater than 7 in. (175 mm), for other than open wood joist construction, the delayed operating time will permit the fire to gain headway, with the result that substantially more sprinklers operate. At distances less than 7 in. (175 mm), other effects occur. Changes in distribution, penetration, and cooling nullify the advantage gained by faster operation. The net result again is increased fire damage accompanied by an increase in the number of sprinklers operated. The optimum clearance between deflectors and ceiling is therefore 7 in. (175 mm). For open

EDUFIRE.IR

wood joist construction, the optimum clearance between deflectors and the bottom of joists is 3½ in. (90 mm).

13.2.7.1.1 Unobstructed Construction. Under unobstructed construction, the distance between the sprinkler deflector and the ceiling shall be a minimum of 6 in. (150 mm) and a maximum of 8 in. (200 mm).

13.2.7.1.2 Obstructed Construction. Under obstructed construction, the sprinkler deflector shall be located in accordance with one of the following arrangements:

(1) Installed with the deflectors located a minimum of 6 in. (150 mm) and a maximum of 12 in. (300 mm) from the ceiling.
(2) Installed with the deflectors within the horizontal planes 1 in. to 6 in. (25 mm to 150 mm) below wood joist, composite wood joist, solid obstructed noncombustible, or solid obstructed limited combustible construction, to a maximum distance of 22 in. (550 mm) below the ceiling/roof or deck. Where CMSA sprinklers are installed under open wood joist construction, their minimum operating pressure shall be 50 psi (3.4 bar) for a K-11.2 (160) sprinkler or 22 psi (1.5 bar) for a K-16.8 (240) sprinkler in accordance with 22.1.5.1.
(3) Installed with deflectors of sprinklers under concrete tee construction with stems spaced less than 7 ft 6 in. (2.3 m) but more than 3 ft (900 mm) on centers, regardless of the depth of the tee, located at or above a horizontal plane 1 in. (25 mm) below the bottom of the stems of the tees and in compliance with Table 13.2.8.1.2.

The requirement in 13.2.7.1.2(3), which has been a long-standing provision for standard spray sprinklers, is included in NFPA 13 because a CMSA sprinkler is a standard-response sprinkler with operating features similar to those of standard spray sprinklers. Therefore, the positioning rules pertaining to sprinkler activation should remain uniform.

13.2.8* Obstructions to Sprinkler Discharge (CMSA Sprinklers).

CMSA sprinklers are more sensitive to obstructions than standard spray pendent and upright sprinklers. CMSA sprinklers "attack" the fire source and rely less on pre-wetting of combustibles than do standard spray pendent and upright sprinklers. The discharge from CMSA sprinklers contains larger water droplets. These droplets have greater momentum, which allows them to penetrate the fire plumes typically generated by the kinds of fires experienced in warehouse and storage operations. Any obstructions that interrupt the discharge reduce the amount of water that reaches the seat of the fire, limiting the sprinklers' effectiveness and allowing the fire to grow larger and become more difficult to control. As a result, the obstruction provisions for CMSA sprinklers are more restrictive than for standard spray pendent and upright sprinklers.

A.13.2.8 To a great extent, CMSA sprinklers rely on direct attack to gain rapid control of both the burning fuel and ceiling temperatures. Therefore, interference with the discharge pattern and obstructions to the distribution should be avoided.

13.2.8.1 Performance Objective.

13.2.8.1.1 Sprinklers shall be located so as to minimize obstructions to discharge as defined in 9.5.5.2 and 9.5.5.3, or additional sprinklers shall be provided to ensure adequate coverage of the hazard.

13.2.8.1.2 Sprinklers shall be arranged to comply with 9.5.5.2, Table 13.2.8.1.2, and Figure 13.2.8.1.2.

13.2.8.1.3 The requirements of 13.2.8.1.2 shall not apply where sprinklers are positioned on opposite sides of the obstruction.

EDUFIRE.IR

TABLE 13.2.8.1.2 *Positioning of Sprinklers to Avoid Obstructions to Discharge (CMSA Sprinklers)*

Distance from Sprinkler to Side of Obstruction (A)	***Maximum Allowable Distance of Deflector Above Bottom of Obstruction (B) [in. (mm)]***
Less than 1 ft (300 mm)	0 (0)
1 ft (300 mm) to less than 1 ft 6 in. (450 mm)	1½ (40)
1 ft 6 in. (450 mm) to less than 2 ft (600 mm)	3 (75)
2 ft (600 mm) to less than 2 ft 6 in. (750 mm)	5½ (140)
2 ft 6 in. (750 mm) to less than 3 ft (900 mm)	8 (200)
3 ft (900 mm) to less than 3 ft 6 in. (1.1 m)	10 (250)
3 ft 6 in. (1.1 m) to less than 4 ft (1.2 m)	12 (300)
4 ft (1.2 m) to less than 4 ft 6 in. (1.4 m)	15 (375)
4 ft 6 in. (1.4 m) to less than 5 ft (1.5 m)	18 (450)
5 ft (1.5 m) to less than 5 ft 6 in. (1.7 m)	22 (550)
5 ft 6 in. (1.7 m) to less than 6 ft (1.8 m)	26 (650)
6 ft (1.8 m)	31 (775)

Note: For *A* and *B*, refer to Figure 13.2.8.1.2.

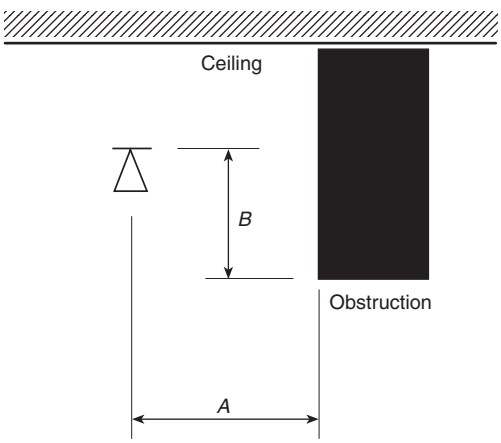

FIGURE 13.2.8.1.2 *Positioning of Sprinkler to Avoid Obstruction to Discharge (CMSA Sprinklers).*

13.2.8.2 Obstructions to Sprinkler Discharge Pattern Development.

13.2.8.2.1 General.

13.2.8.2.1.1 Continuous or noncontinuous obstructions less than or equal to 36 in. (900 mm) below the sprinkler deflector that prevent the pattern from fully developing shall comply with 13.2.8.2.

13.2.8.2.1.2 Regardless of the rules of this section, solid continuous obstructions shall meet the requirements of 13.2.8.1.2 or 13.2.8.1.3.

The discharge pattern of a CMSA sprinkler is narrower than that of a standard spray pendent or upright sprinkler. To allow the discharge pattern to develop and the sprinkler patterns to overlap, a 36 in. (900 mm) zone located below the sprinkler must be evaluated for potential obstructions to the discharge pattern development.

13.2.8.2.1.3* Unless the requirements of 13.2.8.1.2 or 13.2.8.1.3 are met, for obstructions 8 in. (200 mm) or less in width, as shown in Figure 13.2.8.2.1.3, sprinklers shall be positioned

EDUFIRE.IR

such that they are located at least a distance three times greater than the maximum dimension of the obstruction from the sprinkler (e.g., webs and chord members, pipe, columns, and fixtures).

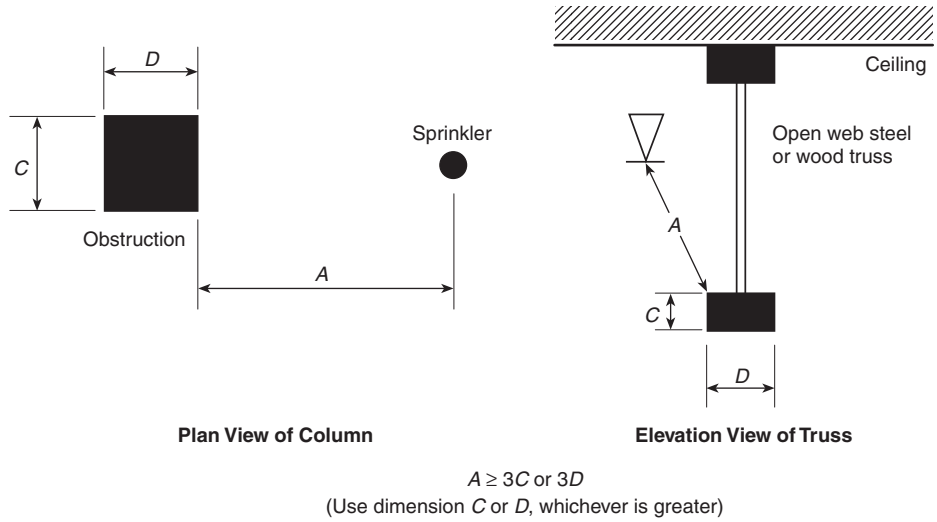

FIGURE 13.2.8.2.1.3 *Minimum Distance from Obstruction (CMSA Sprinklers).*

A.13.2.8.2.1.3 The rules of 13.2.8.2.1.3 (known as the "Three Times Rule") have been written to apply to obstructions where the sprinkler can be expected to get water to both sides of the obstruction without allowing a significant dry shadow on the other side of the obstruction. This works for small noncontinuous obstructions and for continuous obstructions where the sprinkler can throw water over and under the obstruction, such as the bottom chord of an open truss or joist. For solid continuous obstructions, such as a beam, the Three Times Rule is ineffective since the sprinkler cannot throw water over and under the obstruction. Sufficient water must be thrown under the obstruction to adequately cover the floor area on the other side of the obstruction. To ensure this, compliance with the rules of 13.2.8.1.2 is necessary.

13.2.8.2.2 Branch Lines. Upright sprinklers shall be positioned with respect to branch lines in accordance with one of the following:

(1) Upright sprinklers shall be permitted to be attached directly to branch lines less than or equal to 4 in. (100 mm) nominal in diameter.
(2) Upright sprinklers shall be permitted to be offset horizontally a minimum of 12 in. (300 mm) from the pipe.
(3) Upright sprinklers shall be permitted to be supplied by a riser nipple (sprig) to elevate the sprinkler deflector a minimum of 12 in. (300 mm) from the centerline of any pipe over 4 in. (100 mm) nominal in diameter.

Research conducted by FM Global has demonstrated that sprinklers will operate properly as long as the sprinkler is located within the required vertical distance between it and the ceiling above. In addition, testing has demonstrated that there is not a sizable reduction in actual delivered density when upright sprinklers are installed in the presence of a 4 in. (100 mm) wide object located directly below them. Sprigs or riser nipples are not necessary for upright sprinklers as long as the diameter of the pipe does not exceed 4 in. (100 mm).

When an upright sprinkler is installed directly on the branch line, the branch line becomes an obstruction. As the branch line pipe size is increased, the "pipe shadow," or area below the sprinkler that is affected, increases. Because CMSA sprinklers attack the fire, this obstruction can have a significant impact if the fire is located directly below the sprinkler and is a concern when the branch line piping is larger than 2 in. (50 mm).

EDUFIRE.IR

Many systems require larger piping to meet the hydraulic design requirements of the CMSA sprinkler. Raising the sprinkler on a riser nipple reduces the angle of obstruction by limiting the area affected by the obstruction to no more than would be created by a smaller branch line.

Another approach to the problem is taken in 13.2.8.2.2(2). If the sprinkler is offset at least 12 in. (300 mm), the discharge from the sprinkler can flow under the branch line. This position eliminates the obstruction or limits the impact of the obstruction caused by the branch line so that it does not pose a significant problem.

13.2.8.3* Obstructions that Prevent Sprinkler Discharge from Reaching Hazard.

A.13.2.8.3 See A.9.5.5.3.

13.2.8.3.1 Continuous or noncontinuous obstructions that interrupt the water discharge in a horizontal plane below the sprinkler deflector in a manner to limit the distribution from reaching the protected hazard shall comply with 13.2.8.3.

13.2.8.3.2 Sprinklers shall be positioned with respect to fluorescent lighting fixtures, ducts, and obstructions more than 24 in. (600 mm) wide and located entirely below the sprinklers so that the minimum horizontal distance from the near side of the obstruction to the center of the sprinkler is not less than the value specified in Table 13.2.8.3.2 and Figure 13.2.8.3.2.

CMSA sprinklers are more sensitive to obstructions than other types of sprinklers, so any obstruction more than 24 in. (600 mm) wide and less than 24 in. (600 mm) below the sprinkler must be located so that the sprinkler discharge pattern falls under it, as stated in 13.2.8.3.2. The intent is to minimize obstruction to the lateral distribution from individual sprinklers.

TABLE 13.2.8.3.2 *Obstruction Entirely Below Sprinkler (CMSA Sprinklers)*

Minimum Distance to Side of Obstruction (ft) (A)	*Distance of Deflector Above Bottom of Obstruction (B) [in. (mm)]*
Less than 6 in. (150 mm)	1½ (40)
6 in. (150 mm) to less than 12 in. (300 mm)	3 (75)
12 in. (300 mm) to less than 18 in. (450 mm)	4 (100)
18 in. (450 mm) to less than 24 in. (600 mm)	5 (125)
24 in. (600 mm) to less than 30 in. (750 mm)	5½ (140)
30 in. (750 mm) to less than 36 in. (900 mm)	6 (150)

Note: For *A* and *B*, refer to Figure 13.2.8.3.2.

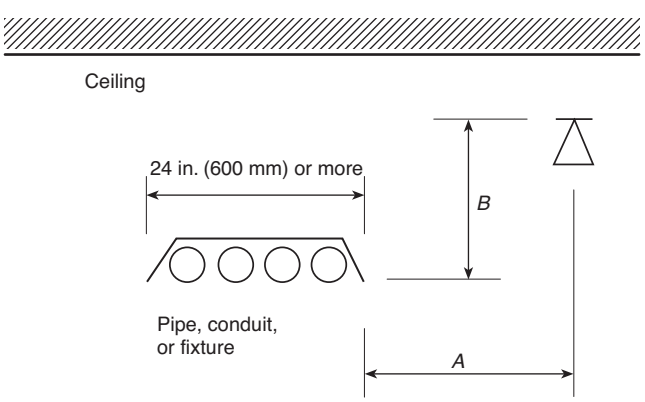

FIGURE 13.2.8.3.2 *Obstruction Entirely Below Sprinkler (CMSA Sprinklers).*

EDUFIRE.IR

13.2.8.3.3 Sprinklers installed under open gratings shall be shielded from the discharge of overhead sprinklers.

13.2.8.3.4 Where the bottom of the obstruction is located 24 in. (600 mm) or more below the sprinkler deflectors, the following shall occur:

(1) Sprinklers shall be positioned so that the obstruction is centered between adjacent sprinklers in accordance with Figure 13.2.8.3.4.
(2) The obstruction width shall meet the following requirements:
  (a) The obstruction shall be limited to a maximum width of 24 in. (600 mm) in accordance with Figure 13.2.8.3.4.
  (b) Where the obstruction is greater than 24 in. (600 mm) wide, one or more lines of sprinklers shall be installed below the obstruction.
(3) The obstruction extension shall meet the following requirements:
  (a) The obstruction shall not extend more than 12 in. (300 mm) to either side of the midpoint between sprinklers in accordance with Figure 13.2.8.3.4.
  (b) Where the extensions of the obstruction exceed 12 in. (300 mm), one or more lines of sprinklers shall be installed below the obstruction.
(4) At least 18 in. (450 mm) clearance shall be maintained between the top of storage and the bottom of the obstruction in accordance with Figure 13.2.8.3.4.

At distances more than 24 in. (600 mm) below the sprinklers, obstructions interfere with the distribution from more than one sprinkler due to characteristics of the sprinkler's discharge pattern (see Figure 13.2.8.3.4). The provisions in 13.2.8.3.4 provide for sufficient overlap of discharge patterns from adjacent sprinklers, which ensures that adequate water distribution is available to penetrate the fire plume.

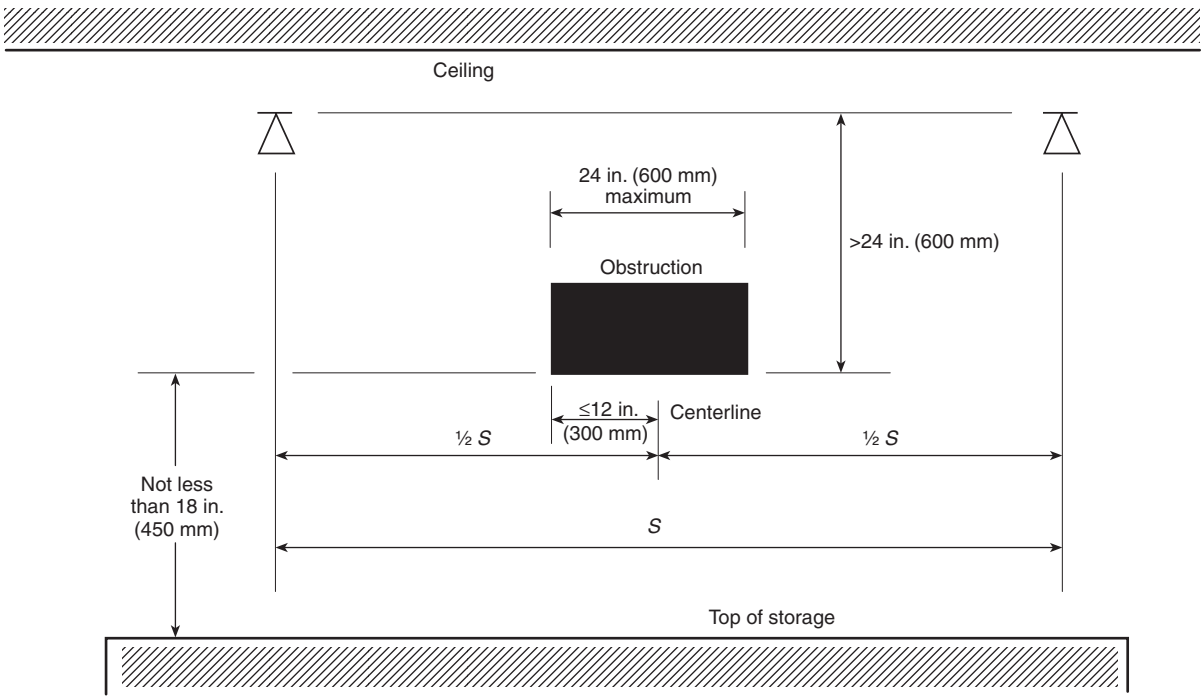

FIGURE 13.2.8.3.4 *Obstruction More Than 24 in. (600 mm) Below Sprinklers (CMSA Sprinklers).*

EDUFIRE.IR

13.2.8.3.5 In the special case of an obstruction running parallel to or directly below a branch line, the following shall occur:

(1) The sprinkler shall be located at least 36 in. (900 mm) above the top of the obstruction in accordance with Figure 13.2.8.3.5.
(2) The obstruction shall be limited to a maximum width of 12 in. (300 mm) in accordance with Figure 13.2.8.3.5.
(3) The obstruction shall be limited to a maximum extension of 6 in. (150 mm) to either side of the centerline of the branch line in accordance with Figure 13.2.8.3.5.

The obstruction to distribution as expected under the conditions specified in 13.2.8.3.5 would not be significantly greater than that which would occur due to pipe shadow. It is important to comply with all the obstruction provisions following 13.2.8.3.5 because relatively minor obstructions can reduce the effectiveness of a CMSA sprinkler. The use of CMSA sprinklers can provide a more effective means of protecting high-challenge storage fire hazards, often without the use of in-rack sprinklers. However, because CMSA sprinklers are obstruction sensitive, special attention must be paid to the details of these installation requirements.

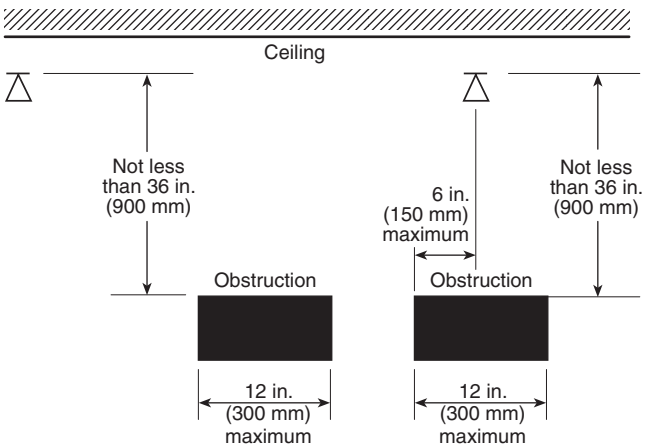

FIGURE 13.2.8.3.5 *Obstruction More Than 36 in. (914 mm) Below Sprinklers (CMSA Sprinklers).*

13.2.9 Clearance to Storage (CMSA Sprinklers). The clearance between the deflector and the top of storage shall be 36 in. (900 mm) or greater.

FAQ [13.2.9]

Why do CMSA sprinklers require 36 in. (900 mm) of clearance to the top of storage?

At clearances of less than 36 in. (900 mm), CMSA sprinklers installed within the allowable spacing guidelines do not provide sufficient overlapping of sprinkler discharge patterns between adjacent sprinklers, which is the reason for the requirement in 13.2.9.

EDUFIRE.IR

EDUFIRE.IR

Installation Requirements for Early Suppression Fast-Response Sprinklers

CHAPTER

14

REORGANIZATION NOTE

The new Chapter 14 contains the specific requirements for the installation of early suppression fast-response (ESFR) sprinklers that were previously in Sections 8.4 and 8.12 of the 2016 edition. To avoid redundancy, certain provisions already contained verbatim in the new Chapter 9 have not been repeated in Chapter 13.

N 14.1 General.

Early suppression fast-response (ESFR) sprinklers shall be selected for use and installation as indicated in this chapter and shall be positioned and spaced in accordance with Section 9.5.

The spacing and location requirements of ESFR sprinklers are designed to ensure that the sprinklers operate while the fire size is sufficiently small so that the fire can be suppressed. ESFR sprinklers are also designed to minimize the impact of obstructions so that the sprinkler discharge can reach the seat of the fire. Spacing requirements are determined on the basis of the following parameters:

1. Maintaining sufficient actual delivered density for various sprinkler spacings and clearances between sprinklers and the top of storage. Scenarios consisting of a fire ignition source centered among four sprinklers, centered between two sprinklers, and located directly under one sprinkler are evaluated to ensure that early fire suppression will be achieved. Ideally, an unshielded fire should be completely extinguished. In the worst case, where the seat of the fire is shielded from direct sprinkler discharge, the fire's heat release rate should be severely diminished, with the likelihood of the fire rekindling or spreading nearly nonexistent.
2. Maintaining sufficient separation of sprinklers to prevent skipping.
3. Maintaining sufficient cooling at ceiling level.

SEE ALSO

The Closer Look feature in Chapter 3, "Understanding ESFR Sprinklers," which follows 3.3.205.4.5.

14.2 Early Suppression Fast-Response Sprinklers.

14.2.1 General. All requirements of Section 9.5 shall apply except as modified in Section 14.2.

14.2.2 ESFR sprinklers shall be used only in wet pipe systems unless specifically listed for use in dry systems or preaction systems.

14.2.3 ESFR sprinklers shall be installed only in buildings where roof or ceiling slope above the sprinklers does not exceed a pitch of 2 in 12 (a rise of 2 units in a run of 12 units, a roof slope of 16.7 percent).

14.2.4* ESFR sprinklers shall be permitted for use in buildings with unobstructed or obstructed construction.

A.14.2.4 Storage in single-story or multistory buildings can be permitted, provided the maximum ceiling/roof height as specified in Table 14.2.8.2.1 is satisfied for each storage area.

EDUFIRE.IR

14.2.4.1 Where depths of the solid structural members (beams, stem, and so forth) exceed 12 in. (300 mm), ESFR sprinklers shall be installed in each channel formed by the solid structural members.

14.2.4.2 Minimum sprinkler spacing and area of coverage shall comply with the requirements of 14.2.8 and 14.2.9.

14.2.5 Draft Curtains.

14.2.5.1 Where ESFR sprinkler systems are installed adjacent to sprinkler systems with standard-response sprinklers, a draft curtain of noncombustible construction and at least 2 ft (600 mm) in depth shall be required to separate the two areas.

14.2.5.2 A clear aisle of at least 4 ft (1.2 m) centered below the draft curtain shall be maintained for separation.

14.2.6 Temperature Ratings. Sprinkler temperature ratings for ESFR sprinklers shall be ordinary unless 9.4.2 requires intermediate- or high-temperature ratings.

14.2.7 Occupancy and Hazard. ESFR sprinklers designed to meet any criteria in Chapter 23 or 24 shall be permitted to protect light and ordinary hazard occupancies.

14.2.8 Protection Areas per Sprinkler (Early Suppression Fast-Response Sprinklers).

14.2.8.1 Determination of Protection Area of Coverage. The protection area of coverage per sprinkler *(A_s)* shall be determined in accordance with 9.5.2.1.

14.2.8.2 Maximum Protection Area of Coverage.

14.2.8.2.1 The maximum allowable protection area of coverage for a sprinkler *(A_s)* shall be in accordance with the value indicated in Table 14.2.8.2.1.

Table 14.2.8.2.1 indicates that ESFR sprinklers cannot be used under obstructed combustible construction. However, 14.2.4 permits ESFR sprinklers in this construction category as long as sprinklers are installed in each channel if the members exceed 12 in. (300 mm) in depth. ESFR sprinklers have been used successfully under beam and girder construction and also panel construction.

TABLE 14.2.8.2.1 *Protection Areas and Maximum Spacing of ESFR Sprinklers*

	Ceiling/Roof Heights Up to 30 ft (9.1 m)				*Ceiling/Roof Heights Over 30 ft (9.1 m)*			
	Protection Area		*Spacing*		*Protection Area*		*Spacing*	
Construction Type	*ft²*	*m²*	*ft*	*m*	*ft²*	*m²*	*ft*	*m*
Noncombustible unobstructed	100	9	12	3.7	100	9	10	3.0
Noncombustible obstructed	100	9	12	3.7	100	9	10	3.0
Combustible unobstructed	100	9	12	3.7	100	9	10	3.0
Combustible obstructed	N/A		N/A		N/A		N/A	

14.2.8.2.2 Unless the requirements of 14.2.8.2.3 are met, the maximum area of coverage of any sprinkler shall not exceed 100 ft² (9.3 m²).

14.2.8.2.3* Deviations from the maximum sprinkler spacing shall be permitted to eliminate obstructions created by structural elements (such as trusses, bar joists, and wind bracing) by moving a sprinkler along the branch line a maximum of 1 ft (300 mm) from its allowable spacing, provided coverage for that sprinkler does not exceed 110 ft² (10 m²) per sprinkler where all of the following conditions are met:

EDUFIRE.IR

(1) The average actual floor area protected by the moved sprinkler and the adjacent sprinklers shall not exceed 100 ft^2 (9 m^2).
(2) Adjacent branch lines shall maintain the same pattern.
(3) In no case shall the distance between sprinklers exceed 12 ft (3.7 m).

ESFR sprinklers must be located a minimum distance from the nearest edge of any bottom chord of a bar joist or truss. If the spacing of sprinklers is not an even multiple of the chord spacing, the standard sprinkler spacing will not meet this requirement. Paragraphs 14.2.8.2.3 and 14.2.8.2.4 permit sprinklers to be moved 1 ft (300 mm) to eliminate the obstruction caused by the bottom chord, as long as the pattern is repeated and the protection area restrictions outlined in 14.2.8.2.3 are met.

A.14.2.8.2.3 See Figure A.14.2.8.2.3.

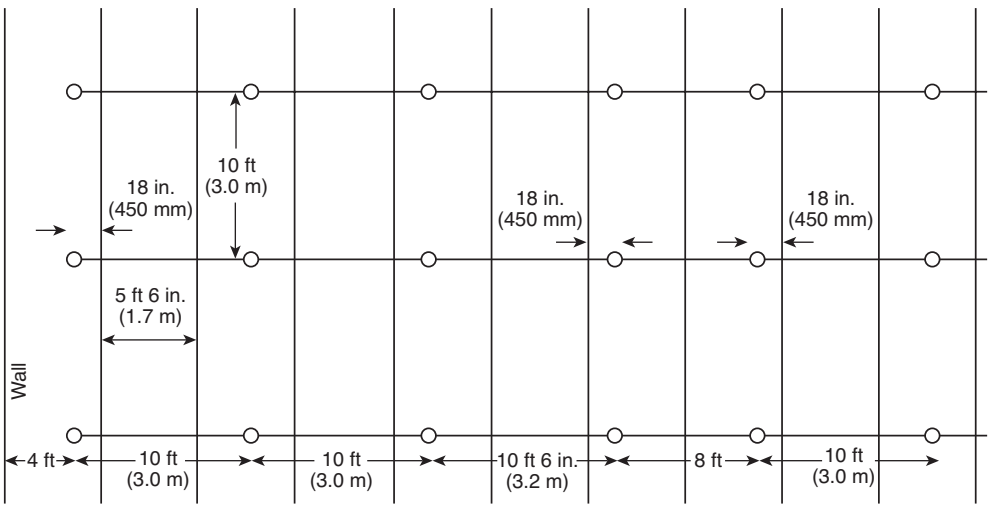

Example 1 of ESFR "Shift" Rule (bar joists or trusses 5 ft 6 in. (1.7 m) o.c.)
Measurement shown is from centerline for ease of illustration; actual measurement to obstruction is to near edge of structural member.

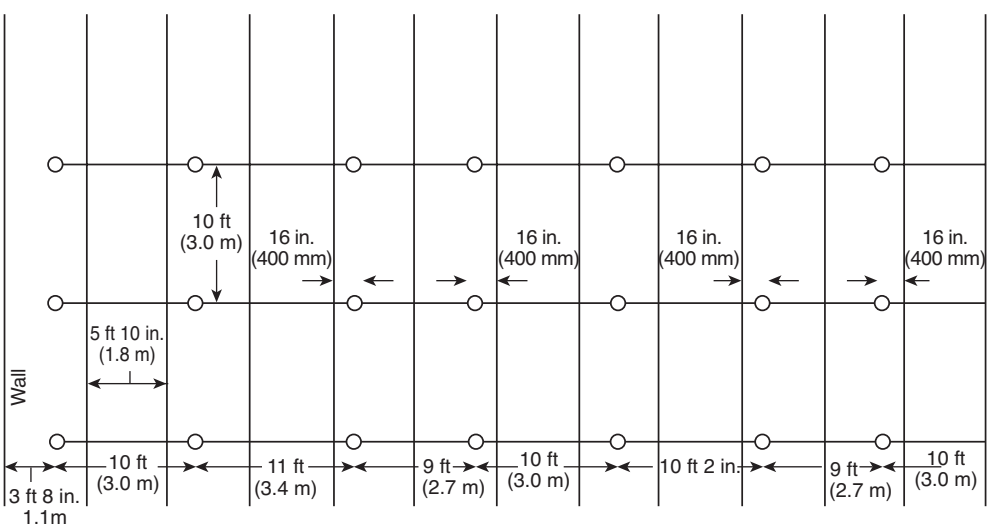

Example 2 of ESFR "Shift" Rule (bar joists or trusses 5 ft 10 in. o.c.)
Measurement shown is from centerline for ease of illustration; actual measurement to obstruction is to near edge of structural member.

FIGURE A.14.2.8.2.3 *ESFR Sprinkler Spacing Within Trusses and Bar Joists.*

EDUFIRE.IR

14.2.8.2.4 Deviations from the maximum sprinkler spacing shall be permitted to eliminate obstructions created by structural elements (such as trusses, bar joists, and wind bracing) by moving a sprinkler along the branch line a maximum of 1 ft (300 mm) from its allowable spacing, provided coverage for that sprinkler does not exceed 110 ft² (10 m²) per sprinkler where all of the following conditions are met:

(1) The average actual floor area protected by the moved sprinkler and the adjacent sprinklers shall not exceed 100 ft² (9 m²).
(2) Adjacent branch lines shall maintain the same pattern.
(3) In no case shall the distance between sprinklers exceed 12 ft (3.7 m).

Similar to the requirements of 14.2.8.2.3, 14.2.8.2.4 permits an entire branch line to be moved a maximum of 12 in. (300 mm), provided certain requirements are met.

FAQ [14.2.8.3]

Why are ESFR sprinklers limited to a minimum protection area of 64 ft² (5.9 m²)?

The protection area for ESFR sprinklers is limited to not less than 64 ft² (5.9 m²) by 14.2.8.3 to prevent the possibility of skipping (see commentary following 13.2.5.3 for an explanation of the term *skipping*). Limiting the minimum distance between sprinklers, as required by 14.2.8.3, also minimizes the potential for skipping.

14.2.8.3 Minimum Protection Area of Coverage. The minimum allowable protection area of coverage for a sprinkler (A_s) shall not be less than 64 ft² (5.9 m²).

The direct relationship between the spacing and the skipping of ESFR sprinklers is not known. With ESFR sprinkler installations, the first few sprinklers should suppress the fire and limit the potential for skipping. If skipping occurs, the likely result is an overtaxing of the ESFR design and a failure of the sprinklers to suppress the fire. While most testing of ESFR sprinklers has been done with an 80 ft² (7.5 m²) or larger spacing, the minimum distance between sprinklers is 8 ft (2.4 m). Permitting an 8 ft (2.4 m) spacing in each direction should not increase the potential for skipping and should provide additional flexibility in system design.

14.2.9 Sprinkler Spacing (Early Suppression Fast-Response Sprinklers).

14.2.9.1 Maximum Distance Between Sprinklers. The maximum distance between sprinklers shall be in accordance with the following:

(1) Where the storage height is less than or equal to 25 ft (7.6 m) and the ceiling height is less than or equal to 30 ft (9.1 m), the distance between sprinklers shall be limited to not more than 12 ft (3.7 m) between sprinklers as shown in Table 14.2.8.2.1.
(2) Unless the requirements of 14.2.9.1(3) or 14.2.9.1(4) are met, where the storage height exceeds 25 ft (7.6 m) and ceiling height exceeds 30 ft (9.1 m), the distance between sprinklers shall be limited to not more than 10 ft (3.0 m) between sprinklers.
(3)* Regardless of the storage or ceiling height arrangement, deviations from the maximum sprinkler spacing shall be permitted to eliminate obstructions created by structural elements (such as trusses, bar joists, and wind bracing) by moving a sprinkler along the branch line a maximum of 1 ft (300 mm) from its allowable spacing, provided coverage for that sprinkler does not exceed 110 ft² (10 m²) where all of the following conditions are met:
   (a) The average actual floor area protected by the moved sprinkler and the adjacent sprinklers shall not exceed 100 ft² (9 m²).
   (b) Adjacent branch lines shall maintain the same pattern.
   (c) In no case shall the distance between sprinklers exceed 12 ft (3.7 m).
(4) Where branch lines are parallel to trusses and bar joists, deviations from the maximum sprinkler spacing shall be permitted to eliminate obstructions created by structural elements (such as trusses, bar joists, and wind bracing) by moving a single branch line a maximum of 1 ft (300 mm) from its allowable spacing, provided coverage for the sprinklers on that branch line and the sprinklers on the branch line it is moving away from does not exceed 110 ft² (10 m²) per sprinkler where all of the following conditions are met:
   (a) The average actual floor area protected by the sprinklers on the moved branch line and the sprinklers on the adjacent branch lines shall not exceed 100 ft² (9 m²) per sprinkler.
   (b) In no case shall the distance between sprinklers exceed 12 ft (3.7 m).

EDUFIRE.IR

(c) It shall not be permitted to move a branch line where there are moved sprinklers on a branch line that exceed the maximum sprinkler spacing.

ESFR sprinklers must be spaced so that patterns have sufficient overlap. As the storage height increases, so does the strength of the fire plume. Additional pattern overlap for storage heights over 25 ft (7.6 m) and ceiling heights over 30 ft (9.1 m) is required for suppression.

Item (3) of 14.2.9.1 permits a sprinkler or a line of sprinklers to be moved an additional 12 in. (300 mm) to eliminate the obstruction caused by the bottom chord, as long as spacing and protection restrictions are followed.

Items (3) and (4) of 14.2.9.1, which are similar to 14.2.8.2.3 and 14.2.8.2.4 concerning protection area limitations, provide the needed allowance for the spacing rules to permit the 12 in. (300 mm) deviation.

A.14.2.9.1(3) See Figure A.14.2.8.2.3.

14.2.9.2 Maximum Distance from Walls. The distance from sprinklers to walls shall not exceed one-half of the allowable distance permitted between sprinklers as indicated in Table 14.2.8.2.1.

14.2.9.3 Minimum Distance from Walls. Sprinklers shall be located a minimum of 4 in. (100 mm) from a wall.

14.2.9.4 Minimum Distance Between Sprinklers. Sprinklers shall be spaced not less than 8 ft (2.4 m) on center.

14.2.10 Deflector Position (Early Suppression Fast-Response Sprinklers).

14.2.10.1 Distance Below Ceilings.

The requirements for deflector positioning are based on the use of upright- or pendent-type sprinklers. Positioning the sprinklers below the ceiling at distances greater than those permitted results in a delayed sprinkler response and allows the fire to grow larger in size. When the sprinklers do finally activate, the fire is likely to be of a size that does not allow early suppression.

The testing of pendent ESFR sprinklers with a nominal K-factor of 25.2 (360) demonstrated that a distance of 18 in. (450 mm) could be tolerated. Similarly, pendent ESFR sprinklers with a K-factor of 16.8 (240) can tolerate a maximum distance of 14 in. (350 mm). For K-14 (200) and K-16.8 (240) upright ESFR sprinklers, the rules are similar to those for a standard upright sprinkler.

FAQ [14.2.10.1]

Why have the rules for K-11.2 (160) upright ESFR sprinklers been removed from NFPA 13?

Installation and design rules for the K-11.2 (160) upright ESFR sprinkler have been removed because the sprinkler is no longer manufactured.

14.2.10.1.1 Pendent sprinklers with a nominal K-factor of K-14 (200) shall be positioned so that deflectors are a maximum 14 in. (350 mm) and a minimum 6 in. (150 mm) below the ceiling.

14.2.10.1.2 Pendent sprinklers with a nominal K-factor of K-16.8 (240) shall be positioned so that deflectors are a maximum 14 in. (350 mm) and a minimum 6 in. (150 mm) below the ceiling.

14.2.10.1.3 Pendent sprinklers with a nominal K-factor of K-22.4 (320) and K-25.2 (360) shall be positioned so that deflectors are a maximum 18 in. (450 mm) and a minimum 6 in. (150 mm) below the ceiling.

14.2.10.1.4 Upright sprinklers with a nominal K-factor of K-14 (200) shall be positioned so that the deflector is 3 in. to 12 in. (75 mm to 300 mm) below the ceiling.

14.2.10.1.5 Upright sprinklers with a nominal K-factor of K-16.8 (240) shall be positioned so that the deflector is 3 in. to 12 in. (75 mm to 300 mm) below the ceiling.

14.2.10.1.6 With obstructed construction, the branch lines shall be permitted to be installed across the beams, but sprinklers shall be located in the bays and not under the beams.

14.2.10.2 Deflector Orientation. Deflectors of sprinklers shall be aligned parallel to ceilings or roofs.

EDUFIRE.IR

14.2.11* Obstructions to Sprinkler Discharge (Early Suppression Fast-Response Sprinklers).

The effects of sprinkler discharge pattern interruption due to an obstruction must be minimized using the provisions of 14.2.11. Shadow areas in a high-piled storage occupancy provide enough of a fuel supply to a growing fire that the effect is not considered minimal. Thus, great care in positioning ESFR sprinklers with respect to lights, structural members, and similar obstructions must be exercised. Many obstructions that can be tolerated for other types of sprinklers are unacceptable where ESFR sprinklers are used.

If possible, ESFR sprinklers should be positioned or obstructions relocated so that any obstructions are above the discharge pattern of the sprinklers. All large, continuous obstructions, including beams and ductwork, must be located to comply with Table 14.2.11.1.1. Smaller isolated obstructions, such as light fixtures, can be handled by following the requirements in 14.2.11.2. Continuous obstructions affecting the discharge pattern of more than one sprinkler can have a significant impact on sprinkler performance and must be located so as to comply with 14.2.11.3. Overall, these provisions are much more restrictive than those for other types of sprinklers, but they are necessary for successful performance of the ESFR sprinkler system.

A multiple-phase research project, *Obstructions and ESFR Sprinklers*, was conducted by the Fire Protection Research Foundation (FPRF) to better understand the impact of obstructions in ESFR performance. The three phases involved a literature search, actual delivered density (ADD) testing, and full-scale fire testing. The results of this project are providing invaluable data that can and will be used in the future to understand obstructions and their effect on the performance of ESFR sprinklers.

SEE ALSO

The complete *Obstructions and ESFR Sprinklers* reports (under "Other sprinkler protection"), located at www.nfpa.org/News-and-Research/Fire-statistics-and-reports/Research-reports/Suppression.

A.14.2.11 The obstruction rules of 14.2.11 have been primarily written to address horizontal obstructions like ducts and lights where the sprinkler needs to spray under the obstruction or get water both over and under the obstruction. For vertical obstruction situations like columns where the water needs to get to two sides of the obstruction, the guidance in 14.2.11 to keep the sprinklers at least 12 in. (300 mm) from obstructions up to 12 in. (300 mm) wide and to keep the sprinkler 24 in. (600 mm) from obstructions over 12 in. (300 mm) to 24 in. (600 mm) wide can be used. For obstructions like columns that are more than 24 in. (600 mm) wide, a sprinkler should be placed on the opposite side of the obstruction while following the minimum and maximum spacing requirements of 14.2.8.

14.2.11.1 Obstructions at or Near Ceiling.

14.2.11.1.1 Sprinklers shall be arranged to comply with Table 14.2.11.1.1 and Figure 14.2.11.1.1 for obstructions at the ceiling, such as beams, ducts, lights, and top chords of trusses and bar joists.

14.2.11.1.2 The requirements of 14.2.11.1.1 shall not apply where sprinklers are spaced on opposite sides of obstructions less than 24 in. (600 mm) wide, provided the distance from the centerline on the obstructions to the sprinklers does not exceed one-half the allowable distance between sprinklers.

14.2.11.1.3 Sprinklers with a special obstruction allowance shall be installed according to their listing.

14.2.11.2* Isolated Obstructions Below Elevation of Sprinklers. Sprinklers shall be arranged with respect to obstructions in accordance with one of the following:

(1) Sprinklers shall be installed below isolated noncontinuous obstructions that restrict only one sprinkler and are located below the elevation of sprinklers such as light fixtures and unit heaters.
(2) Additional sprinklers shall not be required where the obstruction is 2 ft (600 mm) or less in width and the sprinkler is located horizontally 1 ft (300 mm) or greater from the nearest edge of the obstruction.

EDUFIRE.IR

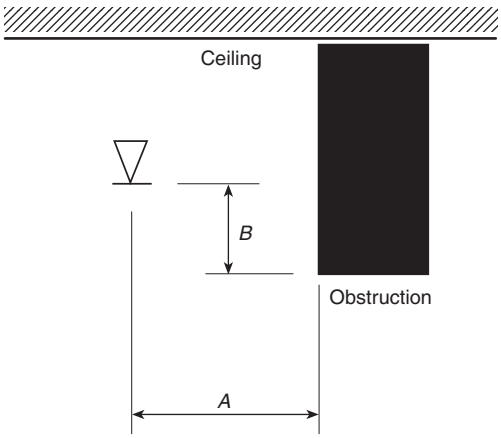

FIGURE 14.2.11.1.1 *Positioning of Sprinkler to Avoid Obstruction to Discharge (ESFR Sprinklers).*

TABLE 14.2.11.1.1 *Positioning of Sprinklers to Avoid Obstructions to Discharge (ESFR Sprinklers)*

Distance from Sprinkler to Side of Obstruction (A)	***Maximum Allowable Distance of Deflector Above Bottom of Obstruction (B) [in. (mm)]***
Less than 1 ft (300 mm)	0 (0)
1 ft (300 mm) to less than 1 ft 6 in. (450 mm)	1½ (40)
1 ft 6 in. (450 mm) to less than 2 ft (600 mm)	3 (75)
2 ft (600 mm) to less than 2 ft 6 in. (750 mm)	5½ (140)
2 ft 6 in. (750 mm) to less than 3 ft (900 mm)	8 (200)
3 ft (900 mm) to less than 3 ft 6 in. (1.1 m)	10 (250)
3 ft 6 in. (1.1 m) to less than 4 ft (1.2 m)	12 (300)
4 ft (1.2 m) to less than 4 ft 6 in. (1.4 m)	15 (375)
4 ft 6 in. (1.4 m) to less than 5 ft (1.5 m)	18 (450)
5 ft (1.5 m) to less than 5 ft 6 in. (1.7 m)	22 (550)
5 ft 6 in. (1.7 m) to less than 6 ft (1.8 m)	26 (650)
6 ft (1.8 m)	31 (775)

Note: For *A* and *B*, refer to Figure 14.2.11.1.1.

(3) Additional sprinklers shall not be required where sprinklers are positioned with respect to the bottom of obstructions in accordance with 14.2.11.1.
(4) Additional sprinklers shall not be required where the obstruction is 2 in. (50 mm) or less in width and is located a minimum of 2 ft (600 mm) below the elevation of the sprinkler deflector or is positioned a minimum of 1 ft (300 mm) horizontally from the sprinkler.
(5) Sprinklers with a special obstruction allowance shall be installed according to their listing.

A.14.2.11.2 Isolated obstructions that block adjacent sprinklers in a similar manner should be treated as a continuous obstruction. High volume low speed fans with large diameters [(20 ft (6.1 m)] represent potential obstructions for ESFR sprinklers and should be positioned in accordance with the provisions of 14.2.11.2 with regard to both the fan motor unit and the blades.

14.2.11.3 Continuous Obstructions Below Sprinklers.

14.2.11.3.1 General Continuous Obstructions. Sprinklers shall be arranged with respect to obstructions in accordance with one of the following:

(1) Sprinklers shall be installed below continuous obstructions, or they shall be arranged to comply with Table 14.2.11.1.1 for horizontal obstructions entirely below the elevation of sprinklers that restrict sprinkler discharge pattern for two or more adjacent sprinklers such as ducts, lights, pipes, and conveyors.
(2) Additional sprinklers shall not be required where the obstruction is 2 in. (50 mm) or less in width and is located a minimum of 2 ft (600 mm) below the elevation of the sprinkler deflector or is positioned a minimum of 1 ft (300 mm) horizontally from the sprinkler.
(3) Additional sprinklers shall not be required where the obstruction is 1 ft (300 mm) or less in width and located a minimum of 1 ft (300 mm) horizontally from the sprinkler.
(4) Additional sprinklers shall not be required where the obstruction is 2 ft (600 mm) or less in width and located a minimum of 2 ft (600 mm) horizontally from the sprinkler.
(5) Ceiling sprinklers shall not be required to comply with Table 14.2.11.1.1 where a row of sprinklers is installed under the obstruction.

EDUFIRE.IR

14.2.11.3.2 Bottom Chords of Bar Joists or Open Trusses. ESFR sprinklers shall be positioned a minimum of 1 ft (300 mm) horizontally from the nearest edge to the bottom chord of a bar joist or open truss where the bottom chord does not exceed 1 ft (300 mm) in width.

14.2.11.3.2.1 The requirements of 14.2.11.3.2 shall not apply where upright sprinklers are located over the bottom chords of bar joists or open trusses that are 4 in. (100 mm) maximum in width.

14.2.11.3.3* For pipes, conduits, or groups of pipes and conduit to be considered individual, they shall be separated from the closest adjacent pipe, conduit, cable tray, or similar obstructions by a minimum of three times the width of the adjacent pipe, conduit, cable tray, or similar obstruction.

A.14.2.11.3.3 For example, a 1 in. (25 mm) diameter conduit would need to be 3 in. (75 mm) from the nearest pipe or conduit to be considered as an individual obstruction. Otherwise, the pipes and/or conduits would be considered as a group when applying the obstruction criteria in 14.2.11.3.1.

14.2.11.3.4 Open Gratings. Sprinklers installed under open gratings shall be of the intermediate level/rack storage type or otherwise shielded from the discharge of overhead sprinklers.

14.2.11.3.5 Overhead Doors. Quick-response spray sprinklers shall be permitted to be utilized under overhead doors.

14.2.11.3.6 Special Obstruction Allowance. Sprinklers with a special obstruction allowance shall be installed according to their listing.

14.2.12 Clearance to Storage (Early Suppression Fast-Response Sprinklers). The clearance between the deflector and the top of storage shall be 36 in. (900 mm) or greater.

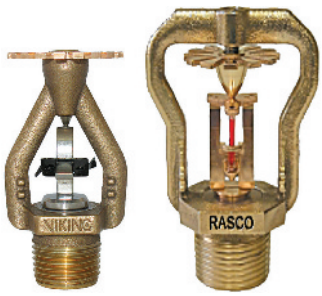

EXHIBIT 14.1 Examples of ESFR Sprinklers: (left) K-16.8 (Courtesy of Viking Group, Inc.) and (right) K-22.4. (Courtesy of Reliable Automatic Sprinkler Co., Inc.)

The application of ESFR technology allows for fire suppression for various commodities stored up to 40 ft (12.0 m) in height with relatively low discharge pressures. At clearances of less than 36 in. (900 mm), ESFR sprinklers installed within the allowable spacing guidelines cannot provide sufficient overlapping of adjacent sprinkler discharge patterns. See Exhibit 14.1 for two examples of ESFR sprinklers. See Chapters 23 and 25 for more information and specific applications of ESFR sprinklers.

References Cited in Commentary

Fire Protection Research Foundation, 1 Batterymarch Park, Quincy, MA 02169-7471.
Obstructions and ESFR Sprinklers – Phase I, October 2014.
Obstructions and ESFR Sprinklers – Phase II, September 2015.
Obstructions and ESFR Sprinklers – Phase III, December 2017.

EDUFIRE.IR

CHAPTER

15

Installation Requirements for Special Sprinklers

REORGANIZATION NOTE

The new Chapter 15 contains the specific requirements for the installation of open, special, dry, and old-style sprinklers that were previously in Section 8.4 of the 2016 edition.

15.1 Open Sprinklers.

15.1.1 Open sprinklers shall be permitted to be used in deluge systems to protect special hazards or exposures or in other special locations.

15.1.2 Open sprinklers shall be installed in accordance with all applicable requirements of this standard for their automatic counterpart.

Open sprinklers are spray sprinklers with their operating elements removed. They are intended for large, simultaneous operation to provide protection for unique hazards. They can be used for water curtains or exposure protection and are referenced in other NFPA standards as described in Chapter 26. Open window or cornice sprinklers are specifically designed for outside exposure fire protection usage (see Section 8.7, Section 19.4, and Chapter 26).

15.2 Special Sprinklers.

15.2.1 Special sprinklers that are intended for the protection of specific hazards or construction features shall be permitted where such devices have been evaluated and listed for performance under the following conditions:

(1) Fire tests related to the intended hazard
(2) Distribution of the spray pattern with respect to wetting of floors and walls
(3) Distribution of the spray pattern with respect to obstructions
(4) Evaluation of the thermal sensitivity of the sprinkler
(5) Performance under horizontal or sloped ceilings
(6) Area of design
(7) Allowable clearance to ceilings

Special sprinklers are intended to protect specific hazards or construction features. The development of these types of sprinklers is often the result of new awareness of the performance limitations of other sprinkler types. Essentially, special sprinklers are developed to solve some protection problem associated with the way an occupancy is built, what materials are used in the construction, and how the occupancy is to be used. To address those concerns, the following key questions need to be answered:

1. How does construction method, materials used, and occupancy use impact sprinkler activation?
2. How does this impact the development and distribution from an operated sprinkler?
3. Is the water distribution sufficient for the anticipated fire hazard?

FAQ [15.2.1]

Are there any limits placed on special sprinklers?

While a good deal of latitude is given to special sprinklers, the orifice size and temperature rating must be in compliance with the provisions of Section 7.2. Also, the maximum area of coverage cannot exceed 400 ft^2 (37 m^2) for light and ordinary hazard occupancies and 196 ft^2 (18.2 m^2) for extra hazard occupancies and high-piled storage. These requirements, which are found in 15.2.2, apply because of concerns for interchangeability and overall system reliability. These sprinkler types should be used in accordance with their listing.

EDUFIRE.IR

Special sprinklers must be listed, and their performance must be evaluated. The evaluation criteria include fire tests related to the specific hazard, spray pattern distribution with respect to the wetting of both walls and floors, obstructions, thermal sensitivity of the operating element, and performance of the sprinkler under horizontal or sloped ceilings. All these factors serve to answer the three questions in the preceding paragraph. The testing results are used to ensure adequate performance and to identify special design and installation criteria to be included as part of the listing.

15.2.2 Special sprinklers shall maintain the following characteristics:

(1) K-factor size shall be in accordance with 7.2.2.
(2) Temperature ratings shall be in accordance with Table 7.2.4.1.
(3) The protection area of coverage shall not exceed 400 ft^2 (37 m^2) for light hazard and ordinary hazard occupancies.
(4) The protection area of coverage shall not exceed 196 ft^2 (18 m^2) for extra hazard and high-piled storage occupancies.

15.3 Dry Sprinklers.

15.3.1* Where dry sprinklers are connected to wet pipe sprinkler systems protecting areas subject to freezing temperatures, the minimum exposed length of the barrel of the dry sprinkler shall be in accordance with Table 15.3.1(a) or Table 15.3.1(b).

Dry sprinklers are typically installed on wet sprinkler systems where sprinklers must be located in areas exposed to freezing conditions. To protect the dry sprinkler from conditions that might interfere with its operation, additional considerations are needed to prevent cold temperatures from affecting the wet pipe portions of the system and to prevent the cold air from the protected space from entering the warm area and causing condensation, which can lead to problems. Historically, designers and installing contractors had to go to the manufacturers for information on the necessary length of the barrel of dry sprinklers. Unfortunately, not all manufacturers provided sufficient information to help the designers properly design the systems. The language in 15.3.1 and the associated tables provide a standardized approach for the use of dry sprinklers.

Dry sprinkler manufacturers have minimum required lengths to ensure that the dry sprinkler is properly installed and that the point of attachment to the wet pipe sprinkler system will be properly protected against condensation, freezing, and ice plugs. While dry sprinklers are available in many different lengths for various applications, where used in conjunction with a wet pipe sprinkler system, care should be taken to ensure that the minimum required lengths are met based on the manufacturer's recommendations and the expected exposed temperature. For example, in a freezer application, where the branch line can be located directly above the freezer, it might be necessary to elevate the branch line to ensure that the minimum distance is maintained between the cold region and the point of connection to the wet pipe system. It is the length of the barrel exposed to warm air that is important, not the overall length of the dry barrel sprinkler.

A.15.3.1 Dry sprinklers must be of sufficient length to avoid freezing of the water-filled pipes due to conduction along the barrel. The values of exposed barrel length in Table 15.3.1(a) and Table 15.3.1(b) have been developed using an assumption of a properly sealed penetration and an assumed maximum wind velocity on the exposed sprinkler of 30 mph (48 km/h). Where higher wind velocity is expected, longer exposed barrel lengths will help avoid freezing of the wet piping. The total length of the barrel of the dry sprinkler must be longer than the values shown in Table 15.3.1(a) and Table 15.3.1(b) because the length shown in the tables is the minimum length of the barrel that needs to be exposed to the warmer ambient temperature in the heated space. See Figure A.15.3.1(a) and Figure A.15.3.1(c) for an example of where to measure the exposed barrel length for a sidewall sprinkler penetrating an exterior wall and Figure A.15.3.1(b) and Figure A.15.3.1(d) for an example of where to measure the exposed barrel length for a pendent sprinkler penetrating a ceiling or top of a freezer.

EDUFIRE.IR

TABLE 15.3.1(a) *Exposed Barrel Lengths for Dry Sprinklers (U.S. Customary Units)*

Ambient Temperature Exposed to Discharge End of Sprinkler (°F)	*Minimum Exposed Barrel Length when Exposed to 40°F (in.)*	*Minimum Exposed Barrel Length when Exposed to 50°F (in.)*	*Minimum Exposed Barrel Length when Exposed to 60°F (in.)*
40	0	0	0
30	0	0	0
20	4	0	0
10	8	1	0
0	12	3	0
−10	14	4	1
−20	14	6	3
−30	16	8	4
−40	18	8	4
−50	20	10	6
−60	20	10	6

TABLE 15.3.1(b) *Exposed Barrel Lengths for Dry Sprinklers (Metric Units)*

Ambient Temperature Exposed to Discharge End of Sprinkler (°C)	*Minimum Exposed Barrel Length when Exposed to 4°C (mm)*	*Minimum Exposed Barrel Length when Exposed to 10°C (mm)*	*Minimum Exposed Barrel Length when Exposed to 16°C (mm)*
4	0	0	0
−1	0	0	0
−7	100	0	0
−12	200	25	0
−18	300	75	0
−23	350	100	25
−29	350	150	75
−34	400	200	100
−40	450	200	100
−46	500	250	150
−51	500	250	150

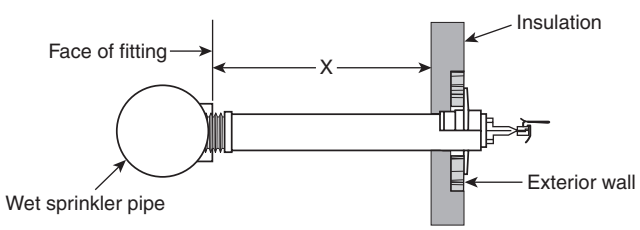

X = Minimum exposed barrel length

X is measured from the face of the sprinkler fitting to the inside surface of the exterior wall or insulation–whichever is closer to the fitting.

FIGURE A.15.3.1(a) *Dry Sidewall Sprinkler Through Wall.*

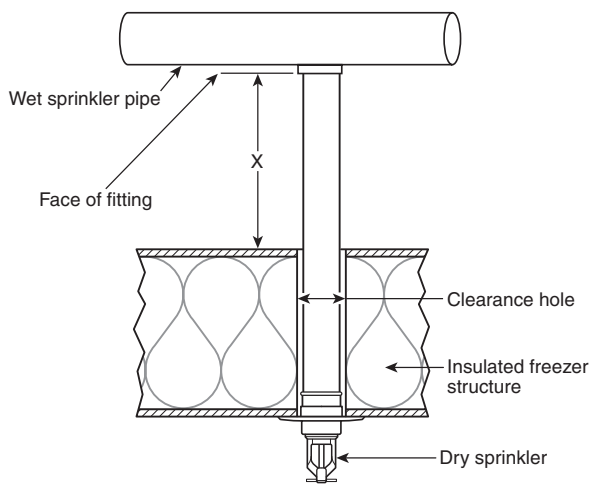

X = Minimum exposed barrel length

X is measured from the face of the sprinkler fitting to the inside surface of the exterior wall or insulation–whichever is closer to the fitting.

FIGURE A.15.3.1(b) *Dry Pendent Sprinkler Through Ceiling or Top of Freezer.*

EDUFIRE.IR

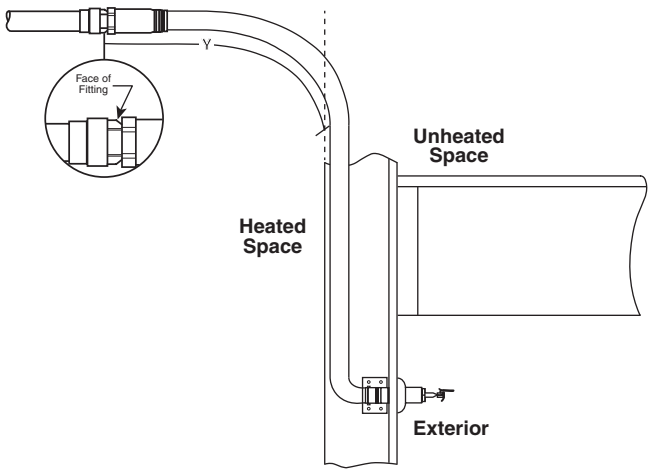

FIGURE A.15.3.1(c) Dry Sidewall Sprinkler Through Wall

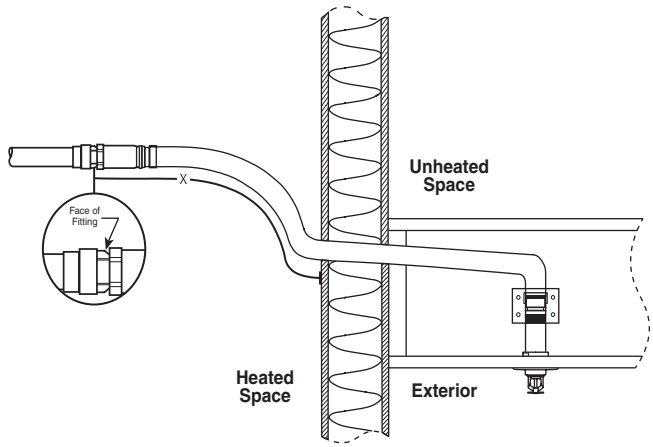

FIGURE A.15.3.1(d) Dry Pendent Sprinkler Through Ceiling

15.3.2 The minimum exposed length shall be measured along the length of the dry sprinkler from the face of the fitting to which the dry sprinkler is installed to the inside surface of the insulation, wall, or ceiling leading to the cold space, whichever is closest to the fitting.

15.3.3* Where dry sprinklers are connected to wet pipe sprinkler systems protecting insulated freezer structures, the clearance space around the sprinkler barrel shall be sealed.

A.15.3.3 The clearance space around the sprinkler barrel should be sealed to avoid leakage of air into the freezing area that could result in the formation of condensate around the sprinkler frame that could inhibit or cause premature operation. See Figure A.15.3.3(a) and Figure A.15.3.3(b).

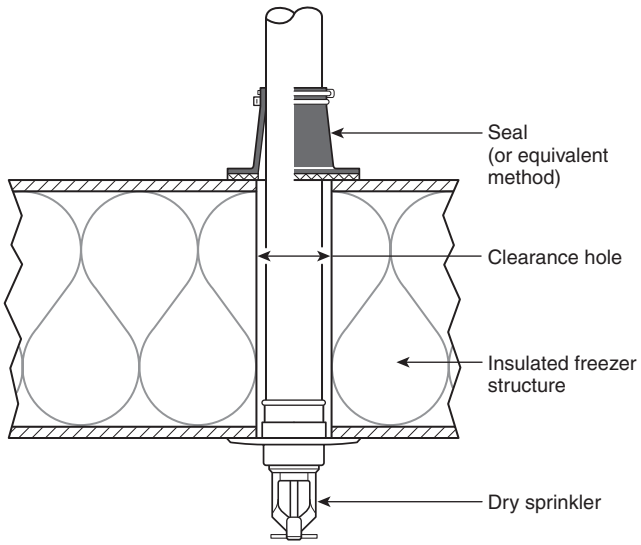

FIGURE A.15.3.3(a) Dry Sprinkler Seal Arrangement — Seal on Exterior of Freezer Structure.

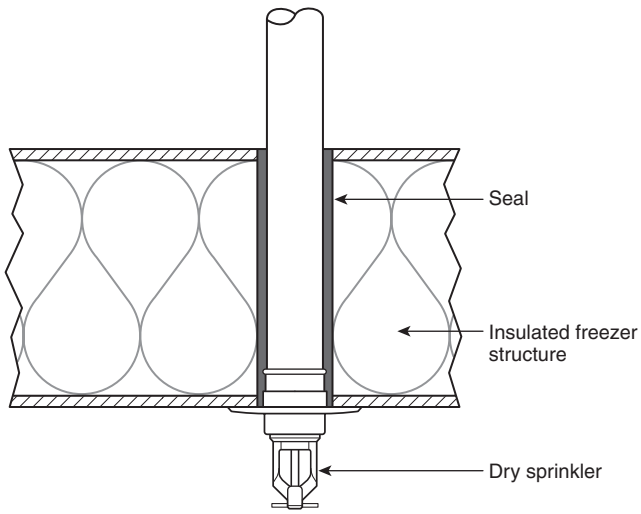

FIGURE A.15.3.3(b) Dry Sprinkler Seal Arrangement — Seal Within Freezer Structure.

EDUFIRE.IR

Air interchange is the leading cause of dry sprinkler issues in the field. Ice can begin to form where warm, moist air above a freezer interfaces the cold, dry air of the freezer, which can cause damage to a dry sprinkler. One of the biggest challenges involves the use of foam insulation around the dry sprinkler, which might initially prevent air interchange but which often breaks the seal if the ceiling flexes for any reason. Figure A.15.3.3(a) and Figure A.15.3.3(b) provide additional guidance on mechanisms to prevent or limit air interchange.

N **15.3.4*** Dry sprinklers shall only be installed in fittings as specified by the manufacturer.

The sealing mechanism for most dry type sprinklers is usually made at the point of connection where the dry sprinkler meets the system piping. Installation in an incorrect fitting can adversely affect sprinkler operation and should be avoided.

N **A.15.3.4** Generally dry sprinklers are installed in tees. Dry sprinklers should never be installed in 90-degree elbows. Some manufacturers allow installation of dry sprinklers in couplings, CPVC adapters, and so forth.

15.4 Old-Style Sprinklers.

15.4.1 Unless required by 9.3.12 or 15.4.2, old-style sprinklers shall not be used in a new installation.

15.4.2 Use of old-style sprinklers shall be permitted where construction features or other special situations require unique water distribution.

Care should be taken when using old-style sprinklers, as permitted by 15.4.2, to protect unusual construction features, especially where a heavy fire-loading situation exists or the sprinklers are also protecting storage arrangements with designs that were originally tested with spray sprinklers.

15.4.3 Old-style sprinklers protecting fur storage vaults shall be permitted to be placed less than 6 ft (1.8 m) on center.

EDUFIRE.IR

EDUFIRE.IR

CHAPTER

16

Installation of Piping, Valves, and Appurtenances

REORGANIZATION NOTE

The new Chapter 16 includes parts of Chapter 6, System Components and Hardware, and Chapter 8, Installation Requirements, of the 2016 edition. Chapter 16 now includes all the installation requirements for individual components (i.e., sprinklers, valves, fittings, piping, and attachments). Note that not all the installation requirements are contained in Chapter 16 — only those that apply to individual components, such as the accessibility of system components; the listing and approval requirements of products; considerations for the inspection, testing, and maintenance of individual components; and requirements that recognize the manufacturers' requirements for individual products. The requirements in this new chapter also coordinate with the system component requirements in the new Chapter 7, Requirements for System Components and Hardware.

16.1 Basic Requirements.

16.1.1* System valves and gauges shall be accessible for operation, inspection, tests, and maintenance.

Access to critical system components is necessary to allow for emergency shutdown after a fire and to check the operation of the system during a fire. Proper access also facilitates inspection, testing, and maintenance of the system in accordance with NFPA 25, *Standard for the Inspection, Testing, and Maintenance of Water-Based Fire Protection Systems.* Although valves and gauges are not required to be visible — that is, they can be located in valve pits or behind doors or removable access panels — 16.9.12 requires appropriate signage for valves, and 16.9.3.1.1 requires that the valves be in an accessible location. Additionally, 16.9.3.3.4 requires that, where control valves are installed overhead, their indicating feature must be visible from the floor below. The term *accessible* should be construed to mean *accessible under normal circumstances* and not requiring the owner, occupant, or service provider to need special equipment to operate control valves during emergency situations.

The term *accessible* in NFPA 13 can have different meanings. Following are some examples of how the term *accessible* might be used:

- "*Accessible* to authorized persons during emergencies"
- "*Accessible* for maintenance and service"
- "*Accessible* preferably 7 ft (2.1 m) above the finished floor"
- "*Accessible*, meaning 'visible' from the floor"
- "*Accessible* by operation from the floor for chain-operated valves or valves in pits that require a handle to reach the control valve"
- "*Inaccessible* for safety considerations"
- "*Easily accessible* for access to hose valves, nozzles, and fire extinguishers"

EDUFIRE.IR

A.16.1.1 The components need not be open or exposed. Doors, removable panels, or valve pits can satisfy this need. Such equipment should not be obstructed by such permanent features as walls, ducts, columns, or direct burial.

16.1.2 Materials and components shall be installed in accordance with material compatibility information that is available as a part of a listing or manufacturer's published information.

SEE ALSO

Subsection 7.4.3, which further addresses the compatibility of CPVC pipe, as well as Section 7.8, which addresses the compatibility of corrosion inhibitors.

Certain materials installed in a sprinkler system can be incompatible with chlorinated polyvinyl chloride (CPVC) materials and can cause systems to leak or rupture due to environmental stress cracking or softening of the CPVC piping. This condition can also occur when the interiors of other components, such as steel pipe, have been coated to reduce the potential for corrosion. Subsection 16.1.2 requires manufacturers to provide information in the installation instructions that identifies all the components of a system and their compatibility. This requirement is one of several that were added to the 2013 edition to address the issue of compatibility in nonmetallic piping and fittings.

The following is a list of materials and components that could be found in a sprinkler system:

- Steel
- Stainless steel
- Brass
- Bronze
- Copper
- Zinc
- Ductile iron
- Lead (in older sprinkler systems)
- CPVC
- Cross-linked polyethylene (PEX)
- Rubber
- Gasket material
- Teflon tape
- Pipe sealant
- Antifreeze
- Foam
- Nonpotable water (i.e., raw water sources)
- Stored water (potentially with additives in a fire apparatus booster tank or a storage tank)
- Corrosion inhibitors
- Oxygen reducers
- Microbial inhibitors
- Nitrogen-enriched water/air
- Lack of moisture (i.e., dry pipe sprinkler systems under vacuum)
- Byproducts from corrosion (e.g., rust)
- Byproducts from cutting (e.g., metal shavings, cutting oils)
- Lubricants

FAQ [16.1.3]

Where can existing installed sprinklers be utilized?

Where sprinklers have been installed in a building on a temporary basis — for example, prior to ceiling work being finished — such sprinklers can be moved to the new location after the finished ceiling is installed. This assumes that when the sprinkler is taken down a fitting or a drop or sprig is attached to it so that the torque is applied to the fitting, drop, or sprig and not the sprinkler itself. Another example of where an existing installed sprinkler can be moved is during the installation of a new ceiling underneath an existing ceiling, provided the sprinklers are of the proper orientation and the associated hazard has not changed.

16.1.3 Reconditioned Components.

16.1.3.1 The use of reconditioned valves and devices as replacement equipment in existing systems shall be permitted.

16.1.3.2 Reconditioned sprinklers shall not be permitted to be utilized on any new or existing system.

Fusible links, frame arms, and deflectors have been known to be damaged during attempts at reconditioning sprinklers, and even the slightest damage can be detrimental to the successful operation of the sprinkler. As a result, only new sprinklers are permitted to be installed on any new or existing system.

EDUFIRE.IR

16.2 Sprinkler Installation.

16.2.1 Only new sprinklers shall be installed.

Prompt sprinkler actuation during the early stages of a fire is critical to the successful performance of the entire sprinkler system. The sprinkler should not leak and the glass bulb should not rupture when installed, nor should the sprinkler operate for any reason other than in response to heat from a fire. Newly listed sprinklers are extensively investigated for their ability to resist leakage and unintended operation as well as for their ability to perform as intended when subjected to a fire condition.

16.2.1.1 When a sprinkler is removed from a fitting or welded outlet, it shall not be reinstalled except as permitted by 16.2.1.1.1.

Because of concerns that sprinklers could be damaged during the removal process, the requirement in 16.2.1.1 was added to the 2013 edition to clarify that when a sprinkler is removed it is to be replaced with a new sprinkler. It was further clarified in the 2016 edition that the restriction applies only to directly removing the sprinkler from the fitting. A sprinkler attached to a drop or a riser nipple can be reused if the pipe, not the sprinkler itself, is removed from the fitting and then is relocated. When a sprinkler is removed, damage can occur to the water seal and operating element, specifically a glass bulb–type element, which could affect sprinkler performance without any visual indication. Typical damage that results when a sprinkler is removed from a fitting is stress applied to the sprinkler frame. Exhibit 16.1 is an example of a sprinkler that was removed while still in its fitting, which can then be reinstalled because there was no stress applied to the sprinkler itself during removal.

16.2.1.1.1 Dry sprinklers shall be permitted to be reinstalled when removed in accordance with the manufacturer's installation and maintenance instructions.

EXHIBIT 16.1 Sprinkler Removed While Installed in a Fitting. (Courtesy of Victaulic®)

16.2.2* Corrosion Resistant.

A.16.2.2 Sprinklers should be permitted to be reinstalled when the sprinkler being removed from the system remains attached to the original fitting or welded outlet, provided care has been taken to ensure the sprinkler has not been damaged. Flexible hose connections are considered a fitting. In new installations, where sprinklers are installed on pendent drop nipples or sidewall sprinklers prior to final cut-back, protective caps and/or straps should remain in place until after the drop nipple has been cut to fit to the final ceiling elevation.

Exhibit 16.2 illustrates an example of a flexible hose connection that can be reinstalled after removal.

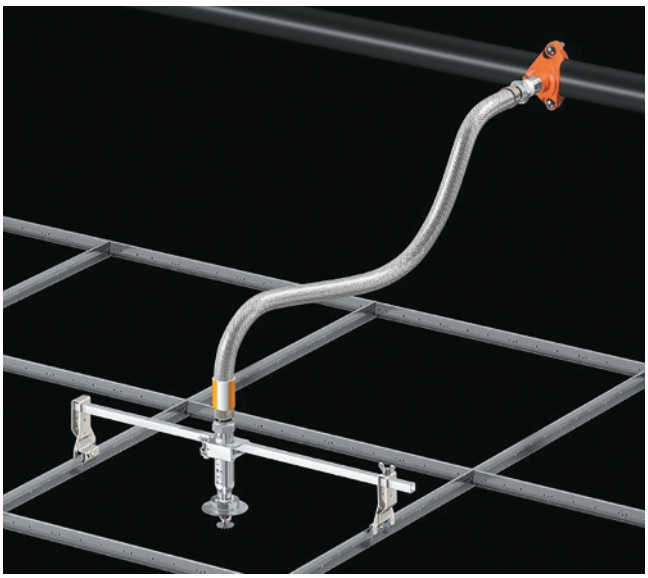

EXHIBIT 16.2 Example of a Removable Flexible Hose Connection. (Courtesy of Victaulic®)

EDUFIRE.IR

EXHIBIT 16.3 Corrosion-Resistant Sprinkler. (Courtesy of American Fire Sprinkler Association)

16.2.2.1 Listed corrosion-resistant sprinklers shall be installed in locations where chemicals, moisture, or other corrosive vapors sufficient to cause corrosion of such devices exist.

Exhibit 16.3 is an example of a sprinkler that has been manufactured with a corrosion-resistant material. Sprinklers with corrosion-resistant materials or special coatings are specifically listed for use in atmospheres that would corrode a sprinkler that has not been investigated for such atmospheres.

16.2.2.1.1* Unless the requirements of 16.2.2.1.2 are met, corrosion-resistant coatings shall be applied only by the manufacturer of the sprinkler and in accordance with the requirements of 16.2.2.1.2.

A.16.2.2.1.1 Care should be taken in the handling and installation of wax-coated or similar sprinklers to avoid damaging the coating.

16.2.2.1.2 Any damage to the protective coating occurring at the time of installation shall be repaired at once using only the coating of the manufacturer of the sprinkler in the approved manner so that no part of the sprinkler will be exposed after installation has been completed.

FAQ [16.2.2.1.1]

Why are only sprinkler manufacturers permitted to apply protective coatings?

An attempt by anyone other than the manufacturer to provide sprinklers with any type of protective coating could result in ineffective protection by the sprinkler or serious impairment of its operation. The listing of sprinklers with protective or special coatings requires that the coatings be applied at the manufacturer's facility. Field application of protective platings and coatings is prohibited.

16.2.3 Painting.

Sprinklers in textile mills, for example, are subject to loading by lint-type materials, which are by-products of the cloth manufacturing process. Another example is a sprinkler that is exposed to any manufacturing process that results in loading from hydraulic oils, lubricants, or other types of material that adhere to the sprinkler. Any sprinkler subject to loading of materials that cannot be readily dusted or blown away must be replaced. More information on this subject can be found in Chapter 5 of NFPA 25. These two examples of events that occur after the system is in service are included here for consideration when an existing system is being modified.

Sprinklers that have been painted in the field, however slightly (including overspray, as shown in Exhibit 16.4), must not be cleaned of paint and reused. Instead, they must be replaced with new sprinklers. Attempting to remove the paint from a sprinkler by scraping or use of chemical paint removers could cause unseen damage that could adversely affect the operation of the sprinkler.

FAQ [16.2.3]

What is loading, as it relates to sprinklers?

Painting of installed sprinklers is the primary, but not the only, example of a problem known as *loading*, in which a buildup of foreign material on the sprinkler acts to delay or prevent proper sprinkler activation. Examples of loading could include dust, powders, overspray, oils, and greases.

EXHIBIT 16.4 Sprinkler Subjected to Paint Overspray

16.2.3.1 Where sprinklers have had paint applied by other than the sprinkler manufacturer, they shall be replaced with new listed sprinklers of the same characteristics, including K-factor, thermal response, and water distribution.

EDUFIRE.IR

16.2.3.2 Where cover plates on concealed sprinklers have been painted by other than the sprinkler manufacturer, the cover plate shall be replaced.

Sprinkler cover plates must not be painted when installed in a ceiling. It is possible that painters will inadvertently paint a cover plate when the surrounding ceiling is being painted. An indicator on the cover plate allows an inspector to determine if a cover plate was incorrectly painted in the field. Exhibit 16.5 illustrates the words "Do Not Paint" lightly stamped in the cover plate. If the cover plate were to be inadvertently painted, the words would no longer be visible.

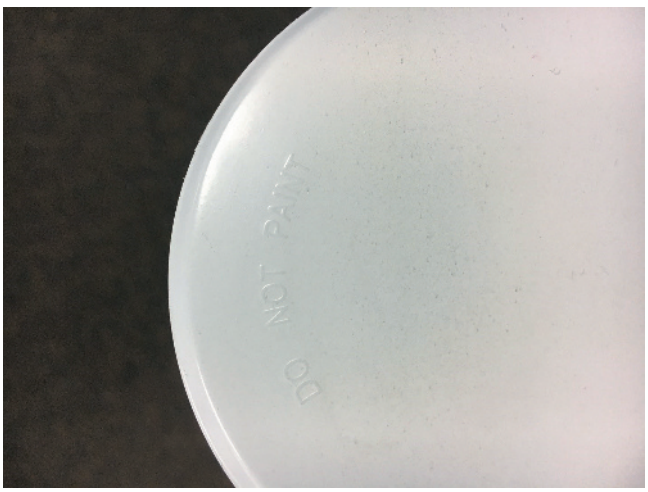

EXHIBIT 16.5 *Sprinkler Cover Plate with the Words "Do Not Paint." (Courtesy of Victaulic®)*

16.2.4 Protective Coverings.

16.2.4.1 Sprinklers protecting spray areas and mixing rooms in resin application areas shall be protected against overspray residue so that they will operate in the event of fire.

16.2.4.2* Where protected in accordance with 16.2.4.1, cellophane bags having a thickness of 0.003 in. (0.08 mm) or less or thin paper bags shall be used.

A.16.2.4.2 Plastic bags should not be used for this purpose due to the fact that shrinkage prior to development of temperatures needed to ensure sprinkler activation can interfere with proper sprinkler operation and development of spray patterns. The prohibition against plastic bags should include polypropylene bags commonly marketed as "cello" bags. True cellophane degrades rather than melts and, like paper, does not display shrinkage.

Exhibit 16.6 shows an example of a cellophane bag being used to protect a sprinkler in a paint spray booth. A report of testing conducted in 1993 included an observation that shrinkage of polypropylene plastic bags was a potential problem, which was confirmed during research testing conducted by the National Fire Sprinkler Association in 2008.

16.2.4.3 Sprinklers that have been painted or coated shall be replaced in accordance with the requirements of 16.2.3.

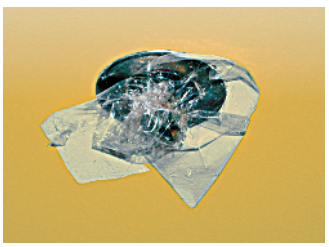

EXHIBIT 16.6 *Sprinkler Protected by a Cellophane Bag.*

N 16.2.5 Escutcheons and Cover Plates.

N **16.2.5.1*** Plates, escutcheons, or other devices used to cover the annular space around a sprinkler shall be metallic or shall be listed for use around a sprinkler.

Nonmetallic plates or escutcheons used to cover the annular space around a sprinkler can deform or melt and impair the operation or discharge characteristics of the sprinkler.

EDUFIRE.IR

N **A.16.2.5.1** It is the intent to provide the owner's certificate for all new systems and where there is a change of occupancy and/or building use.

N **16.2.5.2*** Escutcheons used with recessed, flush-type, or concealed sprinklers shall be part of a listed sprinkler assembly.

N **A.16.2.5.2** The use of the wrong type of escutcheon with recessed or flush-type sprinklers can result in severe disruption of the spray pattern, which can destroy the effectiveness of the sprinkler.

EXHIBIT 16.7 Improperly Installed Concealed Sprinkler.

Components for escutcheon plates, including cover plates, if used, are integral to proper sprinkler performance. The listing of these components ensures that the sprinkler, escutcheon, and cover plate combination will operate as intended and not adversely affect the discharge pattern of the sprinkler. Paragraph 7.2.6.2 requires that the concealed cover plates be listed only with specific sprinkler models. The cover plates are marked with the compatible sprinkler model or sprinkler identification number.

Exhibit 16.7 illustrates a concealed sprinkler with the escutcheon plate and the cover plate missing. Although the missing cover plate will not impair sprinkler performance, the lack of the escutcheon (sprinkler cup) can affect performance because the concealed sprinkler is listed for use with an escutcheon.

Instances have occurred in which the dimensions of a recessed escutcheon that was not investigated or listed with a sprinkler were such that the deflector was not clear of the escutcheon, which seriously impaired the spray pattern. Failure to follow all manufacturer's instructions and listing criteria can result in less than acceptable performance of the sprinkler.

N **16.2.5.3** Cover plates used with concealed sprinklers shall be part of the listed sprinkler assembly.

16.2.5.4 The use of caulking or glue to seal the penetration or to affix the components of a recessed escutcheon or concealed cover plate shall not be permitted.

A recessed escutcheon is part of a listed sprinkler assembly; therefore, it must be attached to the sprinkler as intended by the sprinkler manufacturer and not require glue or caulk for attachment. The application of glue or caulk could interfere with the intended operation by blocking vent holes or clearances between moving parts. These clearances and vents allow heat to move past the sprinkler. Exhibit 16.8 illustrates an example of the clearances between the cover plate and the vent holes near the top of the concealed sprinkler. Energy codes might require the "envelope" of a building to be tightly sealed with the use of caulk as sealant. However, the sealing should not be applied to a concealed sprinkler because it will block the vent holes and could prevent the sprinkler from activating.

EXHIBIT 16.8 Vent Holes in a Recessed Housing and Clearance Between a Cover Plate and Sprinkler Recessed Housing (Courtesy of Victaulic®)

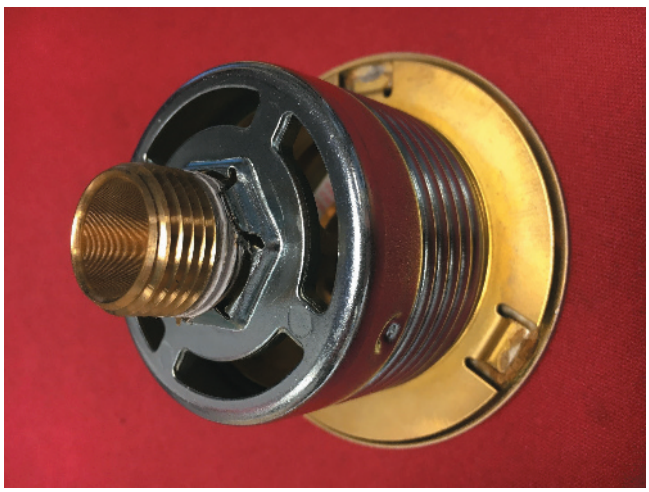

EDUFIRE.IR

16.2.6 Sprinklers subject to mechanical injury shall be protected with listed guards.

Sprinkler guards are protective cages that surround a sprinkler. Exhibit 16.9 illustrates a sprinkler with a listed guard. Guards, by their basic design, have the potential to disrupt the intended sprinkler spray patterns. Listed guards are evaluated with specific sprinklers to verify that the disruption does not affect the performance of the sprinkler. Guards should be used only where a sprinkler is in danger of being struck by an object. A sprinkler guard can minimize the physical damage caused by impact from a variety of objects, including pallet loads used in rack storage facilities. Guards are also useful in protecting people from injury by sprinklers in areas where clearance is low, such as under a stairwell.

Guards should not be confused with shields designed to protect sprinklers from overhead water discharge. An example of an intermediate level sprinkler provided with a shield is shown in Exhibit 16.10.

FAQ [16.2.6]

Are listed intermediate level sprinklers required to follow the recommendations for shield sizing?

Listed intermediate level sprinklers, such as the one shown in Exhibit 16.10, are equipped with integral shields and have been tested under a fire condition when the sprinkler above is operating. Listed intermediate level sprinklers are not required to follow the recommendation for shield sizing.

16.2.7 Stock of Spare Sprinklers.

16.2.7.1* A supply of at least six spare sprinklers shall be maintained on the premises so that any sprinklers that have operated or been damaged in any way can be promptly replaced.

A.16.2.7.1 A minimum of two sprinklers of each type and temperature rating should be provided.

Spare sprinklers of all the types and ratings installed must be available. For a building with a variety of sprinklers, the number of spare sprinklers should be increased above the minimum. Having adequate stock is particularly critical where specially listed sprinklers, such as those specified in Section 15.2, are installed.

Exhibit 16.11 shows a spare sprinkler cabinet equipped with a stock of spare sprinklers. Additionally, a spare sprinkler cabinet should have a sign indicating the sprinkler type, sprinkler identification number (SIN), date, and the number of each type of sprinkler that belongs in the cabinet. Having Teflon tape or the appropriate type of pipe sealant available in close proximity could help lessen the time it takes to place the sprinkler system back into service. Cabinets should also be equipped with the appropriate sprinkler wrench(s) needed to install the sprinklers.

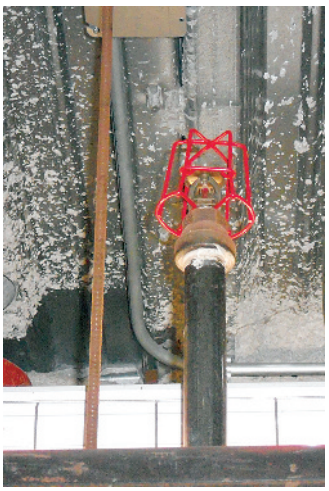

EXHIBIT 16.9 Sprinkler with Listed Guard.

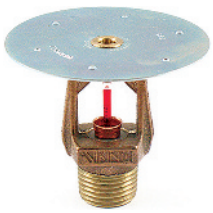

EXHIBIT 16.10 Intermediate Level Sprinkler with a Shield. (Courtesy of Viking Group, Inc.)

EXHIBIT 16.11 Spare Sprinkler Cabinet.

EDUFIRE.IR

ASK THE AHJ

Can the authority having jurisdiction consider a contract with a fire sprinkler system contractor providing 24-hour emergency support as having spare sprinklers "on the premises"?

No. The spare sprinklers need to be physically on site. There is no guarantee that the sprinkler contractor will maintain all the necessary sprinkler types. If they are running short on a particular sprinkler type, contractors might be tempted to use any spare sprinklers they have on hand.

Judgment must be used to determine the number of spare sprinklers to maintain on the premises. For instance, if a building contains 350 sprinklers and only two are standard spray upright sprinklers with a temperature rating of 286°F (141°C), the standard does not intend that 12 such sprinklers be provided in the spare sprinkler cabinet. Two spare sprinklers are practical and acceptable to maintain, since more than that is not needed.

ASK THE AHJ

On a multibuilding campus, can the authority having jurisdiction accept the storage of all the spare sprinklers for all the buildings in one place, or does every building need its own spare sprinkler cabinet?

By requiring the spare sprinklers to be "on the premises," the spare sprinklers for the entire campus could be located in one location if acceptable to the authority having jurisdiction. Regardless of which building had a fire sprinkler activation, there would need to be immediate access to the supply of spare sprinklers and their installation wrenches. This could be accomplished by securing the sprinklers in a facility that has its access keys stored in a fire department lock box.

SEE ALSO

Chapter 5 of NFPA 25 for more information on sprinkler maintenance.

Because the number of different sprinkler types and temperature ratings that might be present in the spare sprinkler cabinet varies, 16.2.7.7 requires that a list of sprinklers be posted in the sprinkler cabinet. The list is not required to be part of a permanent sign or other permanent marking, since the types and numbers of spare sprinklers to be maintained might change as the hazards or other protection conditions change. The list must include the original issue date and the date of any revisions to verify that the list and contents of the spare sprinkler cabinet are current.

16.2.7.2 The sprinklers shall correspond to the types and temperature ratings of the sprinklers in the property.

16.2.7.3 The sprinklers shall be kept in a cabinet located where the temperature to which they are subjected will at no time exceed the maximum ceiling temperatures specified in Table 7.2.4.1 for each of the sprinklers within the cabinet.

16.2.7.4 Where dry sprinklers of different lengths are installed, spare dry sprinklers shall not be required, provided that a means of returning the system to service is furnished.

In systems where dry-type sprinklers of various lengths are installed, spare dry sprinklers are not required if the system can be temporarily placed back in service after a sprinkler activation. Such temporary service can be accomplished by the installation of non–dry type sprinklers in areas that are temporarily not subjected to freezing temperatures or through the use of plugs in areas that will remain below freezing. Because dry sprinklers are manufactured to specific lengths, a requirement to keep a set of replacement sprinklers on the premises would be impractical. In some critical facilities, the owner could choose to keep spare dry sprinklers of the longest length on hand to allow systems to be placed back in service until dry sprinklers of the correct length can be obtained and installed.

16.2.7.5 The stock of spare sprinklers shall include all types and ratings installed and shall be as follows:

(1) For protected facilities having under 300 sprinklers — no fewer than six sprinklers
(2) For protected facilities having 300 to 1000 sprinklers — no fewer than 12 sprinklers
(3) For protected facilities having over 1000 sprinklers — no fewer than 24 sprinklers

EDUFIRE.IR

EXHIBIT 16.12 Open End Fire Sprinkler Wrench (Courtesy of Victaulic®)

EXHIBIT 16.13 Recessed Sprinkler Wrench (Courtesy of Victaulic®)

When selecting the number of spare sprinklers that will be in the spare sprinkler cabinet, it is acceptable to have the appropriate percentage of each type of spare sprinklers. For example, if a building has 200 sidewall sprinklers and 1000 pendent sprinklers installed, then the spare sprinkler cabinet will have 24 total sprinklers in the cabinet. It would be appropriate to have the proper percentage of each type, which in this case would be 4 spare sidewall sprinklers and 20 spare pendent sprinklers in the cabinet.

16.2.7.6* One sprinkler wrench as specified by the sprinkler manufacturer shall be provided in the cabinet for each type of sprinkler installed to be used for the removal and installation of sprinklers in the system.

The proper type of sprinkler wrench must be used to install and remove sprinklers. The use of the wrong wrench could cause damage to the sprinkler. Exhibit 16.12 and Exhibit 16.13 illustrate two types of sprinkler wrenches.

A.16.2.7.6 One sprinkler wrench design can be appropriate for many types of sprinklers and should not require multiple wrenches of the same design.

A sprinkler wrench specified by the sprinkler manufacturer must be available for each sprinkler type installed. However, a wrench for each sprinkler type is not required if the wrench design can be used for multiple types of sprinklers.

16.2.7.7 A list of the sprinklers installed in the property shall be posted in the sprinkler cabinet.

16.2.7.7.1* The list shall include the following:

(1) Sprinkler Identification Number (SIN) if equipped; or the manufacturer, model, K-factor, deflector type, thermal sensitivity, and pressure rating
(2) General description
(3) Quantity of each type to be contained in the cabinet
(4) Issue or revision date of the list

A.16.2.7.7.1 The minimum information in the list contained in the spare sprinkler cabinet should be marked with the sprinkler identification described in 7.2.1; a general description of the sprinkler, including upright, pendent, residential, ESFR, and so forth; and the quantity of sprinklers that is to be maintained in the spare sprinkler cabinet.

An example of the list is shown in Figure A.16.2.7.7.1.

Sprinklers Contained in this Cabinet

Sprinkler Identification, SIN	General Description	Temperature Rating, °F	Sprinkler Quantity Maintained
TY9128	Extended Coverage, K-25, upright	165	6
VK494	Residential concealed pendent	155	6

Issued: 8/31/19 Revised:

FIGURE A.16.2.7.7.1 Sample List.

EDUFIRE.IR

FAQ [16.3]

What are some of the factors to consider when determining the proper material selection for sprinkler piping?

The selection of a particular pipe material is often based on the environmental conditions of the space in which the pipe is to be installed. For example, some industrial environments could require a corrosion-resistant pipe material. The desire to achieve a certain aesthetic appearance could also influence material selection. For instance, where piping is to be installed exposed, copper tubing could be used to blend in with the architectural features.

16.3 Piping Installation.

The methods and procedures necessary for the proper installation of pipe and associated appurtenances are addressed in Section 16.3. Essentially, Section 16.3 describes the proper methods for assembling pipe, fittings, and associated equipment. These are grouped by pipe material, as follows:

16.3.2 Steel pipe, welded or roll-grooved
16.3.3 Steel pipe, threaded or cut grooved
16.3.4 Specially listed steel pipe
16.3.5 Copper tube 16.3.6 Brass pipe
16.3.7 Stainless steel pipe
16.3.9 Nonmetallic pipe and tubing

ASK THE AHJ

Can plastic pipe be used only in low-rise residential fire sprinkler systems per NFPA 13R, *Standard for the Installation of Sprinkler Systems in One- and Two-Family Dwellings and Manufactured Homes*, and in one- and two-family dwellings per NFPA 13D, *Standard for the Installation of Sprinkler Systems in Low-Rise Residential Occupancies*?

No. Plastic pipe specifically listed for use in fire sprinkler systems is allowed to be used with all three NFPA sprinkler standards. However, there are limitations on where and how plastic pipe is used within NFPA 13. See the commentary following 16.3.9.

16.3.1 General.

16.3.1.1 Steel pipe shall be in accordance with 16.3.2, 16.3.3, or 16.3.4.

16.3.1.2 Copper tube shall be in accordance with 16.3.5.

16.3.1.3 Nonmetallic pipe shall be in accordance with 16.3.9.

16.3.1.4 Brass pipe shall be in accordance with 16.3.6.

16.3.1.5 Stainless steel pipe shall be in accordance with 16.3.7.

16.3.2* Steel Pipe — Welded or Roll-Grooved. When steel pipe referenced in Table 7.3.1.1 is used and joined by welding as referenced in 7.5.2 or by roll-grooved pipe and fittings as referenced in 7.5.3, the minimum nominal wall thickness for pressures up to 300 psi (21 bar) shall be in accordance with Schedule 10 for pipe sizes up to 5 in. (125 mm), 0.134 in. (3.4 mm) for 6 in. (150 mm) pipe, 0.188 in. (4.8 mm) for 8 in. and 10 in. (200 mm and 250 mm) pipe, and 0.330 in. (8.4 mm) for 12 in. (300 mm) pipe.

A.16.3.2 See Table A.16.3.2.

EDUFIRE.IR

TABLE A.16.3.2 *Steel Pipe Dimensions*

Nominal Pipe Size		Outside Diameter		Schedule 5 Inside Diameter		Schedule 5 Wall Thickness		Schedule 10[a] Inside Diameter		Schedule 10[a] Wall Thickness		Schedule 30 Inside Diameter		Schedule 30 Wall Thickness		Schedule 40 Inside Diameter		Schedule 40 Wall Thickness	
in.	*mm*	*in.*	*mm*	*in.*	*mm*	*in.*	*mm*	*in.*	*mm*	*in.*	*mm*	*in.*	*mm*	*in.*	*mm*	*in.*	*mm*	*in.*	*mm*
½[b]	15	0.840	21.3	—	—	—	—	0.674	17.1	0.083	2.1	—	—	—	—	0.622	15.8	0.109	2.77
¾[b]	20	1.050	26.7	—	—	—	—	0.884	22.4	0.083	2.1	—	—	—	—	0.824	21.0	0.113	2.87
1	25	1.315	33.4	1.185	30.1	0.065	1.7	1.097	27.9	0.109	2.8	—	—	—	—	1.049	26.6	0.133	3.37
1¼	32	1.660	42.2	1.530	38.9	0.065	1.7	1.442	36.6	0.109	2.8	—	—	—	—	1.380	35.1	0.140	3.56
1½	40	1.900	48.3	1.770	45.0	0.065	1.7	1.682	42.7	0.109	2.8	—	—	—	—	1.610	40.9	0.145	3.68
2	50	2.375	60.3	2.245	57.0	0.065	1.7	2.157	54.8	0.109	2.8	—	—	—	—	2.067	52.5	0.154	3.91
2½	65	2.875	73.0	2.709	68.8	0.083	2.1	2.635	66.9	0.120	3.0	—	—	—	—	2.469	62.7	0.203	5.16
3	80	3.500	88.9	3.334	84.7	0.083	2.1	3.260	82.8	0.120	3.0	—	—	—	—	3.068	77.9	0.216	5.49
3½	90	4.000	101.6	3.834	97.4	0.083	2.1	3.760	95.5	0.120	3.0	—	—	—	—	3.548	90.1	0.226	5.74
4	100	4.500	114.3	4.334	110.1	0.083	2.1	4.260	108.2	0.120	3.0	—	—	—	—	4.026	102.3	0.237	6.02
5	125	5.563	141.3	—	—	—	—	5.295	134.5	0.134	3.4	—	—	—	—	5.047	128.2	0.258	6.55
6	150	6.625	168.3	6.407	162.7	0.109	2.8	6.357	161.5	0.134[c]	3.4	—	—	—	—	6.065	154.1	0.280	7.11
8	200	8.625	219.1	—	—	—	—	8.249	209.5	0.188[c]	4.8	8.071	205.0	0.277[d]	7.0	7.981	—	0.322	—
10	250	10.750	273.1	—	—	—	—	10.370	263.4	0.188[c]	4.8	10.140	257.6	0.307[d]	7.8	10.020	—	0.365	—
12	300	12.750	—	—	—	—	—	—	—	—	—	12.090	—	0.330[c]	—	11.938	—	0.406	—

[a]Schedule 10 defined to 5 in. (127 mm) nominal pipe size by ASTM A135, *Standard Specification for Electric-Resistance-Welded Steel Pipe*.

[b]These values applicable when used in conjunction with Section 29.4 and Section 29.5.

[c]Wall thickness specified in 16.3.2.

[d]Wall thickness specified in 16.3.3.

When Schedule 10 or thinner wall steel pipe is joined by welding or roll-grooved pipe and fittings, the groove-forming or welding process cannot result in a thinner wall thickness other than that due to the normal tolerances associated with the groove-forming or welding, which is the reason for the requirement in 16.3.2. The phrase *minimum nominal wall thickness* recognizes that pipe standards permit minor tolerance variations greater or less than the stated wall thickness.

The nominal ½ in. (15 mm) and ¾ in. (20 mm) pipe information in Table A.16.3.2 is provided only for those applications specified in Sections 29.4 and 29.5. In retrofit situations, Sections 29.4 and 29.5 permit the use of short ½ in. (15 mm) or ¾ in. (20 mm) pipe nipples to supply sprinklers below a false ceiling from existing ½ in. (15 mm) or ¾ in. (20 mm) sprinkler outlets. This allowance for short ½ in. (15 mm) or ¾ in. (20 mm) pipe nipples applies to existing systems where seismic design is not required on the system.

16.3.3 Steel Pipe — Threaded. When steel pipe referenced in Table 7.3.1.1 is joined by threaded fittings referenced in 7.5.1 or by fittings used with pipe having cut grooves, the minimum wall thickness shall be in accordance with Schedule 30 pipe [in sizes 8 in. (200 mm) and larger] or Schedule 40 pipe [in sizes less than 8 in. (200 mm)] for pressures up to 300 psi (21 bar).

When pipe is threaded or grooves are cut into Schedule 10 or thinner steel pipe, the result can be an insufficient pipe wall thickness between the inside pipe diameter and the root diameter of the thread or groove. An insufficient pipe wall thickness reduces the beam strength of the pipe at those threaded or cut-grooved areas and can result in failure of the pipe and fittings. Exhibit 16.14 illustrates pipe joined with threaded fittings. If the threads are properly cut into the pipe in accordance with ASME B1.20.1, *Pipe Threads, General Purpose (inch)*, there will be approximately 3½ threads exposed.

FAQ [16.3.3]

Subsection 16.3.2 references only "welded or roll-grooved" connections, and 16.3.3 references "threaded" connections. Can "cut-grooves" be used to connect steel pipe?

Cut-grooves can be used to connect steel pipe. Subsection 16.3.2 references 7.5.3, Groove Joining Methods, which allows the joining of steel pipe by cut, rolled, swaged, or cast grooves in accordance with the manufacturer's instructions. Subsection 16.3.3 allows fittings used with pipe having cut grooves.

EDUFIRE.IR

EXHIBIT 16.14 Pipe Joined Using Threaded Fittings.

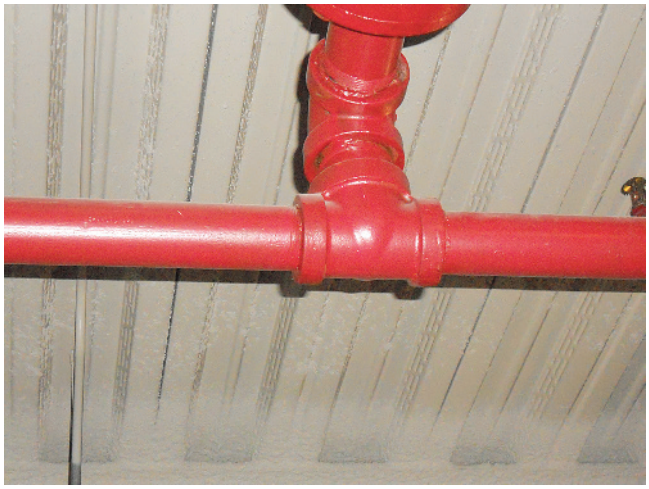

16.3.4 Specially Listed Steel Pipe. Pressure limitations and wall thickness for steel pipe specially listed in accordance with 7.3.3 shall be permitted to be in accordance with the pipe listing requirements.

A threaded or cut-grooved assembly for pipe sizes and schedules other than those specified in NFPA 13 can be used to satisfy the requirement in 16.3.4, provided the assembly is investigated for suitability in automatic sprinkler installations and is listed for this service.

16.3.5 Copper Tube. Copper tube as specified in the standards listed in Table 7.3.1.1 shall have a wall thickness of Type K, Type L, or Type M where used in sprinkler systems.

Many copper and copper alloy tubes and pipes are available for various applications, but Types K, L, and M (as shown in Exhibit 16.15) are the only ones permitted to be used in sprinkler systems. The "type" of copper is an indication of its wall thickness and resulting inside diameter. Type M copper tube is the thinnest walled tubing, so it has the largest inside diameter. This larger internal diameter offers a hydraulic advantage and is less expensive than other types of copper tube. These advantages make Type M tube an attractive copper material where pipe bending is not required.

EXHIBIT 16.15 Copper Tube Types. (Courtesy of Mueller Industries, Inc.)

16.3.6 Brass Pipe. Brass pipe specified in Table 7.3.1.1 shall be permitted in the standard weight in sizes up to 6 in. (150 mm) for pressures up to 175 psig (12 bar) and in the extra strong weight in sizes up to 8 in. (200 mm) for pressures up to 300 psig (21 bar).

EDUFIRE.IR

16.3.7 Stainless Steel Pipe. Stainless steel pipe as referenced in the standards listed in Table 7.3.1.1 shall be in accordance with Schedules 10S or 40S pipe.

16.3.8 Metallic Pipe and Tube Bending.

16.3.8.1 Bending of Schedule 10 steel pipe, or any steel pipe of wall thickness equal to or greater than Schedule 10 and Types K and L copper tube, shall be permitted when bends are made with no kinks, ripples, distortions, or reductions in diameter or any noticeable deviations from round.

NFPA 13 permits bending of all types of Schedule 10 (thin wall) and thicker-walled steel pipe as indicated in Exhibit 16.16. The minimum bending radius for Schedule 40 (standard wall) pipe is less than that for any of the thinner-walled products. Specially listed pipe having a wall thickness less than Schedule 10 cannot be bent.

Type M copper tube cannot be used for bending because the bending results in a wall that is too thin. However, the thicker Type K and Type L copper tubing can be used for bending because adequate material remains after bending. Without control over the bending radius of the pipe, excessive friction loss values for a given elbow or similar segment of pipe that changes the direction of flow can be expected.

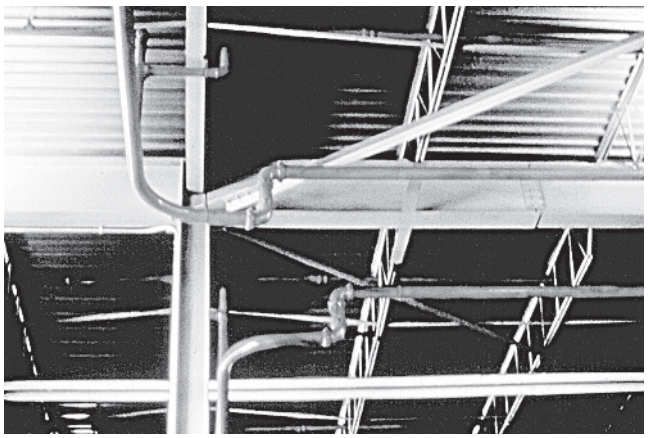

EXHIBIT 16.16 Bent Pipe.

16.3.8.2 For Schedule 40 and copper tubing, the minimum radius of a bend shall be six pipe diameters for pipe sizes 2 in. (50 mm) and smaller and five pipe diameters for pipe sizes 2½ in. (65 mm) and larger.

16.3.8.3 For all other steel pipe, the minimum radius of a bend shall be 12 pipe diameters for all sizes.

16.3.8.4 Bending of listed pipe and tubing shall be permitted as allowed by the listing.

16.3.9 Nonmetallic Pipe and Tubing.

16.3.9.1 Listed nonmetallic pipe shall be installed in accordance with its listing limitations, including installation instructions.

16.3.9.2 When nonmetallic pipe is used in systems utilizing steel piping internally coated with corrosion inhibitors, the steel pipe coating shall be listed for compatibility with the nonmetallic pipe materials.

16.3.9.3 When nonmetallic pipe is used in systems utilizing steel pipe that is not internally coated with corrosion inhibitors, no additional evaluations shall be required.

EDUFIRE.IR

16.3.9.4* When nonmetallic pipe is used in systems utilizing steel pipe, cutting oils and lubricants used for fabrication of the steel piping shall be compatible with the nonmetallic pipe materials in accordance with 16.1.2.

A.16.3.9.4 When fabricating steel pipe for a combination (CPVC–steel) system, the cutting oil and lubricants can cause performance degradation of the CPVC piping. Cutting oils and lubricants found to be compatible are available and should be used.

For determination of compatibility with materials and components, the CPVC pipe manufacturer should be contacted.

16.3.9.5 Fire-stopping materials intended for use on nonmetallic piping penetrations shall be compatible with the nonmetallic pipe materials in accordance with 16.1.2.

Similar to corrosion inhibitors described in 16.3.9.2, questions about products described in 16.3.9.4 and 16.3.9.5 indicate a potential for these products to be incompatible with nonmetallic materials, and, generally, they should not be used with nonmetallic materials. However, if the manufacturer has its product evaluated for compatibility with nonmetallic piping and it is found to be compatible by a testing laboratory, the product can be used in the nonmetallic system.

16.3.9.6 Nonmetallic pipe listed for light hazard occupancies shall be permitted to be installed in ordinary hazard rooms of otherwise light hazard occupancies where the room does not exceed 400 ft^2 (37 m^2).

Nonmetallic pipe is typically not permitted in ordinary hazard occupancies except in specific small ordinary hazard rooms within light hazard occupancies. The limitation to rooms that do not exceed 400 ft^2 (37 m^2) recognizes that almost all buildings have typically small storage rooms or mechanical rooms that would be categorized as ordinary hazard. Requiring a change in pipe type for those rooms or requiring the entire system to use metallic pipe would be burdensome.

16.3.9.6.1 Nonmetallic pipe installed in accordance with 16.3.9.6 shall be permitted to be installed exposed, in accordance with the listing.

CPVC pipe can be installed exposed under certain circumstances. The system must be installed using listed quick-response or listed residential sprinklers. If quick-response sprinklers are used, the deflectors must be installed within 8 in. (200 mm) of the ceiling. If residential sprinklers are used, the sprinklers must be installed in accordance with their listing. To obtain listings for these specific installation parameters, piping materials are subject to rigorous fire-testing procedures. Successful completion of the tests demonstrates that the materials will remain operable under certain fire conditions and will not contribute to the growth of the fire, thereby creating an acceptable confidence level with regard to those materials.

N **16.3.9.6.2** Where nonmetallic pipe installed in accordance with 16.3.9.6 supplies sprinklers in a private garage within a dwelling unit not exceeding 1000 ft^2 (93 m^2) in area, it shall be permitted to be protected from the garage compartment by not less than the same wall or ceiling sheathing that is required by the applicable building code.

16.3.9.7 Bending of listed nonmetallic pipe or tubing shall be permitted as allowed by the listing.

16.3.10 Listed Metallic Pipe and Tubing.

NFPA does not limit aboveground sprinkler system piping materials to the steel, brass, and copper materials identified in Table 7.3.1.1. However, any other materials must be listed for use in sprinkler systems. Subsection 7.3.3 encourages development of other materials that offer cost or performance advantages. Historically, the development of new products and methods, such as threadable light wall steel pipe, copper tubing, and nonmetallic pipe, has occurred through the application of 7.3.3.

Although not shown in Table 7.3.1.1, some light wall steel pipe is listed for fire protection service, and its use is governed by 16.3.8.1 as well. Light wall steel pipe is tested for its ability to provide performance characteristics similar to those of Schedule 40 steel pipe. These piping materials might be advantageous

EDUFIRE.IR

from a hydraulics standpoint, since they have a larger internal diameter than other steel pipe materials. In addition, their weight is considerably less than that of Schedule 40 pipe, and their joining methods require less overall effort.

16.3.10.1 Pipe or tube listed only for light hazard occupancies shall be permitted to be installed in ordinary hazard rooms of otherwise light hazard occupancies where the room does not exceed 400 ft^2 (37 m^2).

16.3.10.1.1 Pipe or tube installed in accordance with 16.3.10.1 shall be permitted to be installed exposed, in accordance with the listing.

16.3.10.2 Bending of listed pipe and tubing shall be permitted as allowed by the listing.

See 16.3.8 for additional requirements on metallic pipe and tube bending.

16.3.11 Return Bends.

16.3.11.1 Unless the requirements of 16.3.11.3, 16.3.11.4, or 16.3.11.5 are met, return bends shall be used where pendent sprinklers are supplied from a raw water source, a mill pond, or open-top reservoirs.

16.3.11.2 Return bends shall be connected to the top of branch lines in order to avoid accumulation of sediment in the drop nipples in accordance with Figure 16.3.11.2.

16.3.11.3 Return bends shall not be required for deluge systems.

16.3.11.4 Return bends shall not be required where dry pendent sprinklers are used.

The purpose of return bends, which are covered in 16.3.11, is to prevent collection of sediment in drop nipples. Return bends should not be taken directly off the bottom of branch lines in wet pipe sprinkler systems, particularly where the systems are supplied from water sources that could contain excessive sediment. Return bends are not necessary on wet pipe systems that use a potable water supply. In this regard, water supplied from a swimming pool is not considered a raw source requiring return bends.

Return bends are also useful where centering of sprinklers in ceiling tile or exact positioning of sprinklers is desirable from an aesthetic or architectural viewpoint. The use of a return bend is shown in Exhibit 16.17. Where standard pendent sprinklers, rather than dry pendent sprinklers, are installed on preaction and dry pipe systems, return bends are required per 8.2.2(3), 8.3.2.5(3), and 8.4.2.4(3). Return bends are required due to the possibility of scale buildup obstructing the sprinkler orifice. Dry pendent sprinklers protrude up into the fitting on the pipe, which reduces the amount of sediment that could potentially enter the dry pendent sprinkler.

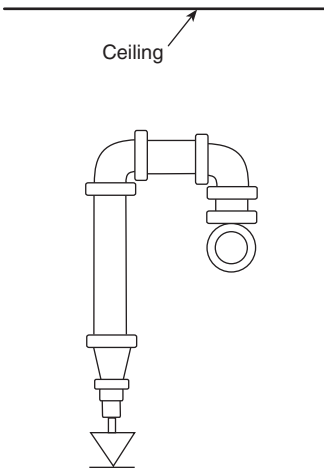

FIGURE 16.3.11.2 *Return Bend Arrangement.*

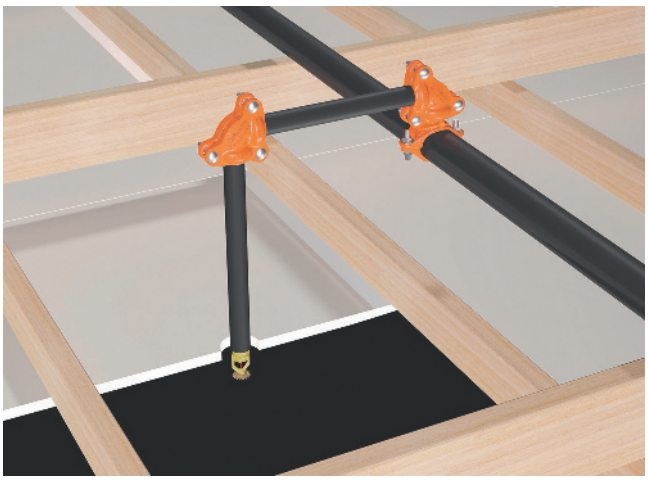

EXHIBIT 16.17 *Return Bend Used for Pendent Sprinkler Positioning. (Courtesy of Victaulic®)*

EDUFIRE.IR

EXHIBIT 16.18 Sprinkler with Hexagonal Bushing. (Courtesy of Tyco Fire Products LP)

16.3.11.5 Return bends shall not be required for wet pipe systems where sprinklers with a nominal K-factor of K-11.2 (160) or larger are used.

Large K-factor sprinklers increase the chance that sediment will flush out of the operating sprinkler.

16.3.12 Piping to Sprinklers Below Ceilings.

16.3.12.1* In new installations expected to supply sprinklers below a ceiling, minimum 1 in. (25 mm) outlets shall be provided.

A.16.3.12.1 Outlets meeting the requirements of this standard should be provided in anticipation of the final finished area.

16.3.12.2* In new installations, it shall be permitted to provide minimum 1 in. (25 mm) outlets with hexagonal bushings to accommodate sprinklers attached directly to branch line fittings to allow for future system modifications.

Exhibit 16.18 illustrates an example of a hexagonal bushing.

A.16.3.12.2 Providing 1 in. (25 mm) minimum outlets with bushings can provide for future changes in building uses or occupancies.

16.4 Protection of Piping.

16.4.1 Protection of Piping Against Freezing.

The permitted methods of freeze protection have been organized as follows:

16.4.1.1 Dry pipe system
16.4.1.1 Preaction system
16.4.1.1 Insulation
16.4.1.2 Antifreeze
16.4.1.3 Insulated covers, frostproof casings, circulation, or other approved methods
16.4.1.4 Heat trace tape
16.4.1.5 Acceptable methods designed by a professional engineer (PE)
30.1 Maintain the space at 40°F (4°C) or above

ASK THE AHJ

Can the authority having jurisdiction restrict which method is used to protect the pipe from freezing?

No. The system designer can choose from any of the permitted methods.

16.4.1.1* Where any portion of a system is subject to freezing and the temperatures cannot be reliably maintained at or above 40°F (4°C), the system shall be installed as a dry pipe or preaction system.

ASK THE AHJ

The design drawings submitted to the authority having jurisdiction for review have a note on them indicating that it is the responsibility of the owner to provide adequate heat. Is that sufficient to meet the requirements of 16.4.1.1?

No. Authorities having jurisdiction see this mistake on many projects. Such a drawing comment is sufficient for the normally occupied spaces. However, there are many areas of buildings that the architect has not designed as heated spaces. Therefore, the owner will not be able to provide the heat. In most cases, the building owner or the designated representative is responsible for keeping heat in areas with wet pipe systems and also for maintaining proper insulation in the building.

EDUFIRE.IR

DESIGNER'S CORNER [16.4]

What's the best way to protect the pipe in a sprinkler system from freezing?

There are several ways to protect pipe from freezing, but it is difficult to determine which way is best for all situations. Chapter 8 of NFPA 13 only allows the use of antifreeze products that are specifically listed. However, there are no such products listed at this time, so the following options can be considered:

1. Heating the space where the wet piping will go
2. Tenting insulation over the piping
3. Keeping piping in interior walls and using sidewall sprinklers
4. Using listed heat tracing (wires wrapped around the pipe through which an electrical current is run, creating heat)
5. Keeping the wet pipe in a heated space and using dry-type sprinklers to penetrate into the cold space
6. Using a dry pipe system
7. Using a preaction system
8. Having a PE perform a heat loss calculation

Each of the potential options listed has its advantages and disadvantages, with varying levels of initial cost and maintenance and with conditions that need to be monitored during operation. Tenting the insulation over the pipe can be extremely effective as long as the insulation is not installed between the heated space and the pipe and sufficient insulation is kept over the pipe to trap the heat coming up from below. Other trades working in the building need to understand the importance of not disturbing the insulation once it has been laid down.

In recent editions, NFPA 13 has been modified to allow heat tracing on branch lines. Previous editions prohibited heat tracing on branch lines because of concerns over the potential to heat the sprinkler to its operating temperature and the insulation becoming an obstruction to the sprinkler discharge. Underwriters Laboratories (UL) worked closely with the Institute of Electrical and Electronics Engineers (IEEE) to make changes to the listing process required for heat tracing. If heat tracing specifically listed for sprinkler system branch lines is used in accordance with its listing, the concerns are minimized and it is acceptable to NFPA 13.

While dry pipe sprinkler systems have been popular and successful for many years in some types of occupancies, they do allow larger fire growth before water is applied, typically opening more sprinklers during a fire. As long as the building owner sees the potential additional damage as acceptable, a dry pipe system can be used. However, in dwelling units of residential occupancies, a significant delay in getting water to the fire is not acceptable. In such cases, NFPA 13 requires a maximum water delivery time of 15 seconds to the most remote portion of the dwelling unit protected with the dry pipe system. This stringent requirement might eliminate dry pipe systems from consideration in this situation.

Single-interlock preaction systems are not subject to the 15-second water delivery time in dwelling units, but if they are being used, detectors will be needed in every space where there are sprinklers, including closets and bathrooms. They also would need to be more sensitive than the sprinklers to minimize the delay in discharging water. Single-interlock systems that are designed in this way will perform similarly to wet pipe systems.

The decision on selecting a freeze protection scheme lies with the designer. For some projects, the designer might choose to employ different options on different parts of the property. Each potential scenario should be evaluated on a case-by-case basis.

A.16.4.1.1 Water-filled piping can be run in spaces above heated room, such as attics, even if the space above the room is not heated itself. Insulation can be located above the pipe to trap the heat from below and prevent the pipe from freezing. It is important not to bury the piping in the insulation because if too much insulation ends up between the pipe and the heated space, the insulation will prevent the heat from getting to the pipe. This method of protecting the pipe is acceptable to this standard.

16.4.1.1.1 The requirements of 16.4.1.1 shall not apply where alternate methods of freeze prevention are provided in accordance with one of the methods described in 16.4.1.2 through 16.4.1.4.1.

16.4.1.2 Unheated areas shall be permitted to be protected by antifreeze systems or by other systems specifically listed for the purpose.

A wet pipe system should always be the first choice in the selection of a system to meet the requirements of 16.4.1.2. Dry pipe systems should be considered when the minimum temperature of 40°F (4°C) cannot be maintained. The use of a dry pipe system for any unheated area should be limited to that area, and a separate wet pipe system should be used for the heated portions of a building. Dry pipe systems tend to have slower operating times, increased corrosion rates on the internal portions of the pipe, and greater maintenance requirements than wet pipe systems.

EDUFIRE.IR

16.4.1.3 Where aboveground water-filled supply pipes, risers, system risers, or feed mains pass through open areas, cold rooms, passageways, or other areas exposed to temperatures below 40°F (4°C), the pipe shall be permitted to be protected against freezing by insulating coverings, frostproof casings, or other means of maintaining a minimum temperature between 40°F and 120°F (4°C and 49°C).

Other means of freeze protection referred to in 16.4.1.3 include steam coils, heat tracing, and circulating hot water tubing that has been specifically investigated and listed for use with sprinkler systems. With any of these alternative approaches, caution must be used to verify that temperatures do not exceed the maximum ambient temperature allowed for the sprinkler's temperature rating. Excessive temperatures can be conducted through the piping and can lead to unwanted sprinkler operation. In addition, the need for insulation in conjunction with an alternative approach system must be evaluated.

FAQ [16.4.1.4]

Does 16.4.1.4 permit branch lines to be heat traced and insulated?

Branch lines are permitted to be heat traced where the heat tracing is specifically listed for branch line applications. The specific listing for branch lines is necessary because of the proximity of the heat tracing to the sprinklers and because the potential for unwanted sprinkler operation is greater than when a feed or cross main is heat traced. When branch lines are insulated in conjunction with heat tracing, any requirements of the listing and the manufacturer's installation instructions must be followed to avoid potential obstruction created by the insulation to the sprinkler water distribution pattern.

16.4.1.4 Listed heat-tracing systems shall be permitted in accordance with 16.4.1.4.1 and 16.4.1.4.2.

16.4.1.4.1 Where used to protect branch lines, the heat-tracing system shall be specifically listed for use on branch lines.

16.4.1.4.2 Electric supervision of the heat-tracing system shall provide positive confirmation that the circuit is energized.

16.4.1.5 Water-filled piping shall be permitted to be installed in areas where the temperature is less than 40°F (4°C) when heat loss calculations performed by a professional engineer verify that the system will not freeze.

16.4.2* Protection of Piping Against Corrosion.

A.16.4.2 Where approved, the pipe identification can be covered with paint or other protective coatings before installation.

Paragraph 7.3.4.1 requires sprinkler piping to be marked along its length so that the type of pipe can be identified. Where approved and after verification that the proper piping has been used, the piping is permitted to be painted or provided with a protective coating to meet the corrosion protection requirements of 16.4.2.

16.4.2.1* Where corrosive conditions are known to exist due to moisture or fumes from corrosive chemicals or both, special types of fittings, pipes, and hangers that resist corrosion shall be used, or a protective coating shall be applied to all unprotected exposed surfaces of the sprinkler system.

A.16.4.2.1 Being exposed to the outside atmosphere is not necessarily a corrosive environment. Types of locations where corrosive conditions can exist include bleacheries, dye houses, metal plating processes, animal pens, and certain chemical plants. If corrosive conditions are not of great intensity and humidity is not abnormally high, good results can be obtained by using a good grade of commercial acid-resisting paint. The paint manufacturer's instructions should be followed in the preparation of the surface and in the method of application.

Where moisture conditions are severe but corrosive conditions are not of great intensity, copper tube or galvanized steel pipe, fittings, and hangers might be suitable. The exposed threads of steel pipe should be painted.

In instances where the piping is not accessible and where the exposure to corrosive fumes is severe, either a protective coating of high quality can be employed or some form of corrosion-resistant material used.

Piping installed in oceanfront facilities can be subject to higher than normal rates of corrosion due to salt spray from the ocean.

Protective paints and coatings are not permitted to be applied in the field to automatic sprinklers. Automatic sprinklers must be provided with corrosion-resistant coatings applied by the manufacturer in accordance with 7.2.5.1.

EDUFIRE.IR

16.4.2.2 Where water supplies or environmental conditions are known to have unusual corrosive properties, piping shall have a corrosion resistance ratio (CRR) of 1 or more, and the system shall be treated in accordance with 5.1.5.

Caution must be exercised when the inclusion of corrosion-control additives to sprinkler systems is being considered, and the authority having jurisdiction should be consulted (see 16.4.2.2). A remote possibility of contaminating the domestic supply through backflow exists. Some chemical additives can solidify when exposed to air, causing obstruction to waterflow. Such chemicals have been used for poor quality water or as a corrosion inhibitor for the circulating closed-loop systems.

Although corrosion protection for exposed surfaces is independent of wall thickness and acceptable pipe-joining methods, the use of threaded thin-wall pipe must be avoided where it would be subject internally to water having unusual corrosive properties. The thinner wall between the inside diameter of the pipe and the root diameter of the threads cannot withstand the same amount of corrosion and introduces a failure point for the piping system. If threaded pipe is used, it should be Schedule 30 or heavier for pipe sizes 8 in. (200 mm) or larger and Schedule 40 for pipe sizes less than 8 in. (200 mm). The use of welded or roll-grooved Schedule 10 pipe would also be satisfactory.

16.4.2.3 Where corrosive conditions exist or piping is exposed to the weather, corrosion-resistant types of pipe, fittings, and hangers or protective corrosion-resistant coatings shall be used.

16.4.2.4 Where steel pipe is used underground, the pipe shall be protected against corrosion.

16.4.3* Protection of Piping in Hazardous Areas.

A.16.4.3 Protection should be provided in any area of a structure or building that poses a degree of hazard greater than that normal to the general occupancy of the building or structure. These areas include areas for the storage or use of combustibles or flammables; toxic, noxious, or corrosive materials; and heat-producing appliances.

16.4.3.1 Private service main aboveground piping shall not pass through hazardous areas and shall be located so that it is protected from mechanical and fire damage.

Private service mains are typically installed underground. Where the underground pipes are transitioning from underground to aboveground, they need to be protected. Examples of private mains that are considered aboveground could include mains in tunnels or the first few feet of the pipe that enters a building.

16.4.3.2 Private service main aboveground piping shall be permitted to be located in hazardous areas protected by an automatic sprinkler system.

Private fire service main piping addressed in 16.4.3.2 should be located outside buildings and buried. In some cases, running piping within the building could be necessary. The piping must not be exposed to hazardous areas, because it would be subject to damage and would be unable to provide water to other areas that might need protection. If automatic sprinkler protection designed for the hazard involved is provided, the potential for main damage is minimized.

16.5 Protection of Risers Subject to Mechanical Damage.

Sprinkler risers subject to mechanical damage shall be protected by steel posts, concrete barriers, or other approved means.

16.6 Provision for Flushing Systems.

16.6.1 All sprinkler systems shall be arranged for flushing.

EDUFIRE.IR

16.6.2 Readily removable fittings shall be provided at the end of all cross mains.

The installation of "tees" or grooved couplings on the ends of the cross mains can aid in the ability to flush the cross mains.

16.6.3 All cross mains shall terminate in 1¼ in. (32 mm) or larger pipe.

16.6.4 All branch lines on gridded systems shall be arranged to facilitate flushing.

16.7* Air Venting.

The vent required by 8.1.5 shall be located near a high point in the system to allow air to be removed from that portion of the system by one of the following methods:

(1) Manual valve, minimum ½ in. (15 mm) size
(2) Automatic air vent
(3) Remote inspector's test valve
(4) Other approved means

A.16.7 A manual or automatic air venting valve can be a reasonable approach on wet pipe sprinkler systems to reduce corrosion activity. The purpose of the air venting valve is to exhaust as much trapped air as possible from a single location every time the system is filled. The objective of venting is to reduce the amount of oxygen trapped in the system that will fuel corrosion and microbial activity. It is neither the intent nor practical to exhaust all trapped air from a single location on a wet pipe sprinkler system; however, more than one vent can be used on a system at the designer's discretion. Interconnection of branch line piping for venting purposes is not necessary. An inspector's test valve can serve this purpose.

The air venting valve should be located where it will be most effective. System piping layout will guide the designer in choosing an effective location for venting. In order to effectively accomplish venting, it is necessary to choose a location where the greatest volume of trapped air is vented during the first fill and each subsequent drain and fill event. The vent connection to the system should be located off the top of horizontal piping at a high point in the system; however, the vent connection can also be effectively located off the side of a riser or riser nipple at a high point in the system.

Manual air venting valves should be accessible. The manual air venting valve should be located at an accessible point and preferably not over 7 ft (2.1 m) above the floor. Automatic air valves are not required to comply with the accessibility requirement of manual air venting valves; however, it is recommended the designer locate automatic air vents over areas without ceilings, above a lay-in ceiling, or above an access panel.

Each wet pipe sprinkler system should be vented every time the system is filled.

N 16.8 Fitting Installation.

N 16.8.1 Metallic Fittings. (Reserved)

N 16.8.2 Nonmetallic Fittings.

16.8.2.1* When nonmetallic fittings are used in systems utilizing internally coated steel piping, the steel pipe shall be listed for compatibility with the nonmetallic fittings.

EDUFIRE.IR

A.16.8.2.1 CPVC is a plastic material and consideration is necessary when other materials or chemicals come in contact with CPVC that can cause degradation of performance of the fitting due to interaction of materials. Compliance with 7.4.3 combined with following manufacturer's guidance on installation and compatible materials will help prevent premature performance degradation of non-metallic fittings. Mechanical stress caused by hanging methods or bending on non-metallic piping beyond the manufacturer's recommended limitations can cause stress failure over time and should be avoided.

16.8.2.2* When nonmetallic fittings are used in systems utilizing steel pipe that is not internally coated with corrosion inhibitors, no additional evaluations are required.

A.16.8.2.2 When fabricating steel pipe for a system using non-metallic and steel pipe, the cutting oil and lubricants can cause performance degradation of the non-metallic fitting.

16.8.2.3 When nonmetallic fittings are used in systems utilizing steel pipe, cutting oils and lubricants used for fabrication of the steel piping shall be compatible with the nonmetallic fittings in accordance with 16.1.2.

16.8.2.4 Fire-stopping materials intended for use on nonmetallic fitting penetrations shall be investigated for compatibility with the nonmetallic fitting materials in accordance with 16.1.2.

Similar to corrosion inhibitors described in 16.8.2.1, the products described in 16.8.2.3 and 16.8.2.4 have a high potential to be incompatible with nonmetallic materials and, generally, should not be used with nonmetallic materials. However, if a manufacturer has its product evaluated for compatibility with nonmetallic piping and it is found to be compatible by a testing laboratory, the product can be used in the nonmetallic system.

SEE ALSO

Subsection 16.1.2 for additional information on system component compatibility.

16.8.3* Fitting Pressure Limits.

A.16.8.3 The rupture strength of cast-iron fittings 2 in. (50 mm) in size and smaller and malleable iron fittings 6 in. (150 mm) in size and smaller is sufficient to provide an adequate factor of safety.

16.8.3.1 Standard weight pattern cast-iron fittings 2 in. (50 mm) in size and smaller shall be permitted where pressures do not exceed 300 psi (21 bar).

16.8.3.2 Standard weight pattern malleable iron fittings 6 in. (150 mm) in size and smaller shall be permitted where pressures do not exceed 300 psi (21 bar).

16.8.3.3 Fittings not meeting the requirements of 16.8.3.1 and 16.8.3.2 shall be extra-heavy pattern where pressures exceed 175 psi (12 bar).

16.8.3.4 Cast bronze threaded fittings in accordance with ASME B16.15, *Cast Copper Alloy Threaded Fittings, Classes 125 and 250*, shall be permitted where pressures do not exceed 200 psi (14 bar) for Class 125 fittings and 400 psi (28 bar) for Class 250 fittings.

Paragraphs 16.8.3.1 and 16.8.3.2 permit cast-iron fittings 2 in. (50 mm) in size and smaller and malleable iron fittings 6 in. (150 mm) in size and smaller to be used in systems where pressures do not exceed 300 psi (21 bar). The design and rupture strength associated with these fittings provides an adequate level of performance. According to 16.8.3.5, fittings not addressed by Table 7.4.1 are permitted to be used in systems up to the pressure limitation of their listing.

16.8.3.5 Listed fittings shall be permitted for system pressures up to the limits specified in their listings.

16.8.4* Couplings and Unions.

A.16.8.4 Listed flexible connections are permissible and encouraged for sprinkler installations in racks to reduce the possibility of physical damage. Where flexible tubing is used, it should be located so that it will be protected against mechanical injury.

16.8.4.1 Screwed unions shall not be used on pipe larger than 2 in. (50 mm).

EDUFIRE.IR

A variety of acceptable fittings (e.g., threaded, grooved, welded, or flanged) are available for use in connecting various sizes of pipe. NFPA 13 permits the use of various joining methods throughout the system. However, screwed unions larger than 2 in. (50 mm) in size present a maintenance problem because of their tendency to develop leaks.

16.8.4.2 Couplings and unions of other than screwed-type shall be of types listed specifically for use in sprinkler systems.

16.8.5 Reducers and Bushings.

16.8.5.1 Unless the requirements of 16.8.5.2 or 16.8.5.3 are met, a one-piece reducing fitting shall be used wherever a change is made in the size of the pipe.

16.8.5.2 Hexagonal or face bushings shall be permitted in reducing the size of openings of fittings when standard fittings of the required size are not available.

16.8.5.3 Hexagonal bushings as permitted in 16.3.12.2 shall be permitted to be used.

The intent of 16.8.5.3 is to prohibit the use of bushings where a one-piece reducing fitting is commercially available at the time the system is installed. Bushings should not be utilized for other than the circumstance cited in 16.3.12.2, in which bushings are temporarily installed to facilitate an unrestricted flow to sprinklers installed below a future drop ceiling. In general, bushings have poorer flow characteristics than reducing fittings and have a greater tendency to leak due to the additional threads.

The use of bushings in lieu of fittings under all but the most pressing conditions is discouraged. For example, a particular fitting might actually be manufactured but backordered for several months. If the proper reducing fitting cannot be obtained after a reasonable effort, then the use of bushings can be considered. Exhibit 16.18 illustrates the use of a hexagonal bushing in place of a one-piece reducing fitting.

16.8.5.4 The requirements of 16.8.5.1 and 16.8.5.2 shall not apply to CPVC fittings.

Subsection 16.8.2 provides additional requirements for nonmetallic fittings.

16.8.6 Extension Fitting.

Historically, extension fittings fell within a gray area with little guidance from the code, but recent changes have clarified the requirements. Whether extension fittings needed to be included within the hydraulic calculations has also been an issue since friction loss is excluded for the fitting directly connected to the sprinkler, although that is normally a tee, elbow, or reducer. There also was no restriction on the use of combining multiple extensions.

Those issues were addressed in the 2016 edition. Only a single extension can be used, and it is limited to 2 in. (50 mm). These shorter extensions are not included in the hydraulic calculation, the same as if the sprinkler were connected to a tee since both fittings present a similar amount of friction loss. There is an allowance to go beyond 2 in. (50 mm) for a listed device. The primary reason for its listing would be to identify the applicable friction loss. If an extension is used with a tee, then that tee must be included in the hydraulic calculations. They most likely would be used for minor adjustments to interface with the ceiling. Exhibit 16.19 illustrates various extension fittings.

EXHIBIT 16.19 Extension Fittings (Courtesy of Victaulic®)

16.8.6.1 Extension fittings shall be permitted to be used with sprinklers K-8.0 or smaller.

16.8.6.2 Extension fittings shall be permitted to be used with sprinklers in light hazard and ordinary hazard occupancies only.

16.8.6.3 The internal diameter of extension fittings shall have the same nominal inlet diameter of the attached sprinkler.

16.8.6.4 A single extension fitting up to a maximum of 2 in. (50 mm) in length shall be permitted to be installed with a sprinkler.

16.8.6.4.1 Extension fittings longer than 2 in. (50 mm) shall not be permitted unless specifically listed.

EDUFIRE.IR

16.8.6.5 Extension fittings shall be included in the hydraulic calculations.

16.8.6.5.1 Extension fittings 2 in. (50 mm) and less shall not be required to be included in the hydraulic calculations.

N **16.8.7 Threaded Pipe and Fittings.**

16.9 Valves.

16.9.1 General.

16.9.1.1 Drain Valves and Test Valves. Drain valves and test valves shall be approved.

Drain valves and test valves are not considered essential for proper operation of the sprinkler system and are required only to be approved. However, listed drain valves that have been investigated by a testing laboratory for their intended use are available for this application.

16.9.1.2 Valve Pressure Requirements. When water pressures exceed 175 psi (12 bar), valves shall be used in accordance with their pressure ratings.

The minimum working pressure for system components is established in 7.1.2 as 175 psi (12 bar). When working pressures are expected to exceed that value, special components, such as extra-heavy valves, must be used. Listed valves that can accommodate higher pressures are currently available.

16.9.2 Wafer-Type Valves. Wafer-type valves with components that extend beyond the valve body shall be installed in a manner that does not interfere with the operation of any system components.

The discs of some listed wafer-type (butterfly) valves extend beyond the end of the valve body. Documented instances of such discs contacting other system components and partially obstructing the waterway exist. To avoid contact with other components in close proximity of the butterfly valve, the valves should be installed with piping before and after the valve to provide the required clearance. See Exhibit 16.20 for an example of a correctly installed butterfly valve.

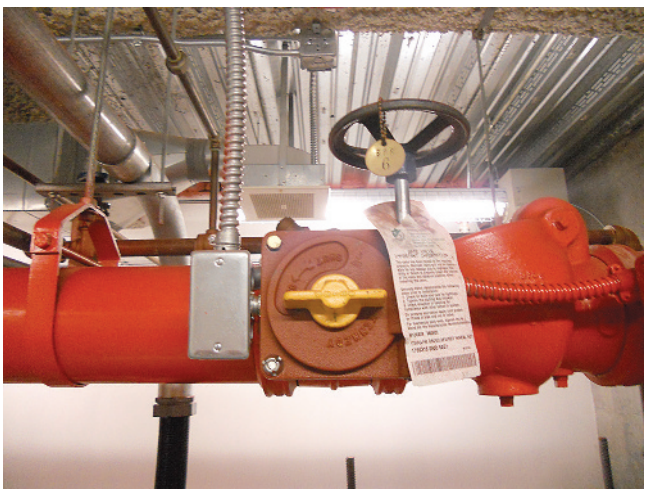

EXHIBIT 16.20 *Butterfly Valve.*

EDUFIRE.IR

16.9.3* Control Valves.

A.16.9.3 See Figure A.16.9.3.

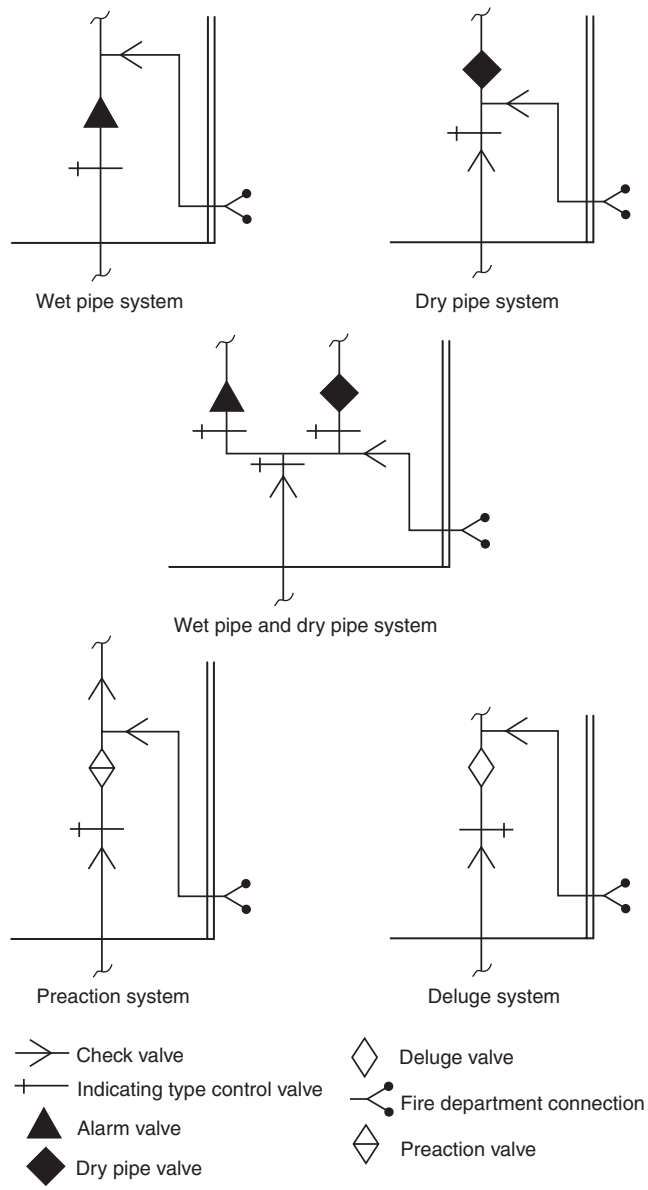

FIGURE A.16.9.3 *Examples of Acceptable Valve Arrangements.*

16.9.3.1* General.

A.16.9.3.1 A water supply connection should not extend into a building or through a building wall unless such connection is under the control of an outside listed indicating valve or an inside listed indicating valve located near the outside wall of the building.

All valves controlling water supplies for sprinkler systems or portions thereof, including floor control valves, should be accessible to authorized persons during emergencies. Permanent ladders, clamped treads on risers, chain-operated hand wheels, or other accepted means should be provided where necessary.

EDUFIRE.IR

Outside control valves are suggested in the following order of preference:

(1) Listed indicating valves at each connection into the building at least 40 ft (12 m) from buildings if space permits
(2) Control valves installed in a cutoff stair tower or valve room accessible from outside
(3) Valves located in risers with indicating posts arranged for outside operation
(4) Key-operated valves in each connection into the building

16.9.3.1.1 Each sprinkler system shall be provided with a listed indicating valve in an accessible location, so located as to control all automatic sources of water supply.

16.9.3.1.2 At least one listed indicating valve shall be installed in each source of water supply.

Each source of water supply, with the exception of the fire department connection, is to be equipped with an indicating control valve to isolate each source. Exhibit 16.21 illustrates the application of the requirements of 16.9.3.1.2 for a sprinkler system loop on each floor of a high-rise building that is supplied by two risers. Each riser must be capable of being isolated.

Exhibit 16.21 illustrates an example of a valve arrangement for a high-rise building. This arrangement has two risers supplying both sprinklers and 2 in. (50 mm) hose outlets with a connection from each of the risers to a sprinkler loop main on each floor, where each connection from the riser to the loop contains an indicating-type pressure-regulating control valve, waterflow switch, and outside stem and yoke (OS&Y) control valve.

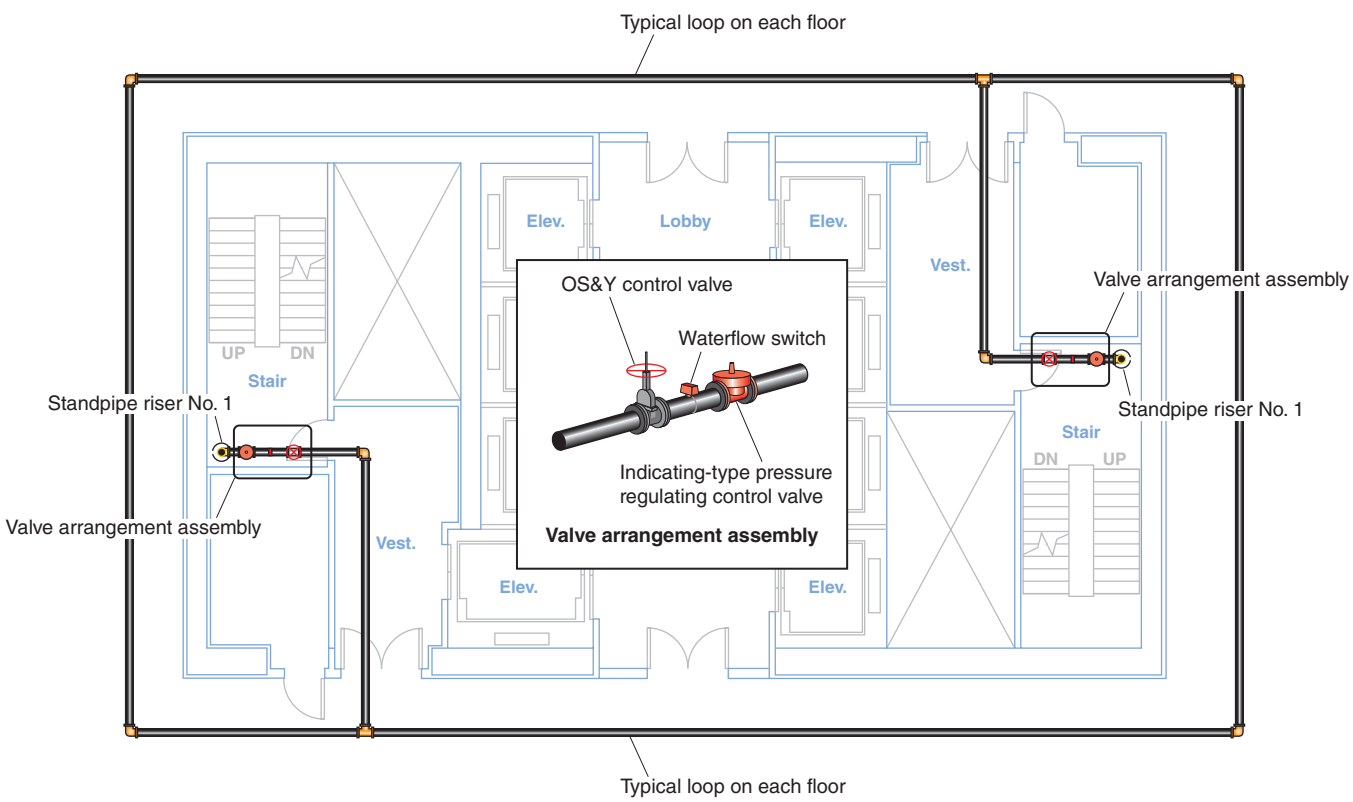

EXHIBIT 16.21 Valve Arrangement. (Courtesy of Stephan Laforest)

EDUFIRE.IR

Personnel authorized to close a control valve should be able to do so without the use of equipment. For example, a control valve is not considered accessible if personnel need a ladder and to remove ceiling tiles in order to access the valve. Another example of an inaccessible control valve is one where the riser room is arranged such that sprinkler piping or other equipment prevents personnel from being able to reach the valve without climbing or performing other unsafe maneuvers. However, A.16.9.3.1 indicates that the valve could be at a higher ceiling level if a permanent ladder is installed or the control valve is chain operable from the floor. When the system riser layout is being developed, it must be remembered that responding fire department personnel might be wearing air packs when they are trying to access the system control valve. It is worth noting that 16.9.3 does not specify requirements for where in the building the riser room is to be located.

16.9.3.1.3 The requirements of 16.9.3.1.2 shall not apply to the fire department connection, and there shall be no shutoff valve in the fire department connection.

Exhibit 16.22 illustrates a wet pipe sprinkler system riser with a fire department connection. The fire department connection does not have a control valve in accordance with 16.9.3.1.3.

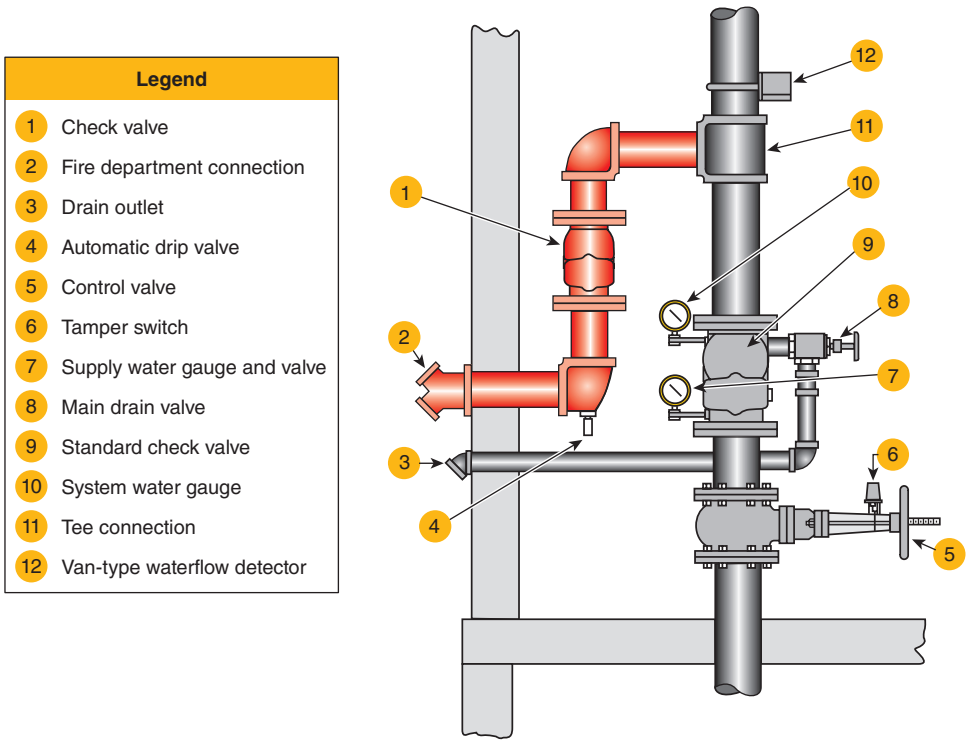

EXHIBIT 16.22 Wet Pipe Riser with Fire Department Connection.

16.9.3.2 Listed Indicating Valves. Unless the requirements of 16.9.3.2.1, 16.9.3.2.2, or 16.9.3.2.3 are met, all valves controlling connections to water supplies and to supply pipes to sprinklers shall be listed indicating valves.

EDUFIRE.IR

16.9.3.2.1 A listed underground gate valve equipped with a listed indicator post shall be permitted.

16.9.3.2.2 A listed water control valve assembly with a reliable position indication connected to a remote supervisory station shall be permitted.

16.9.3.2.3 A nonindicating valve, such as an underground gate valve with approved roadway box, complete with T-wrench, and where accepted by the authority having jurisdiction, shall be permitted.

All valves controlling the flow of water to sprinklers must be listed and must incorporate a method to readily determining whether the valve is open, unless the valves meet the conditions of 16.9.3.2.1, 16.9.3.2.2, or 16.9.3.2.3. The means of indicating the valve's position can be part of the valve itself, such as a rising stem, as indicated in Exhibit 16.23, or a feature of the assembly, as illustrated in Exhibit 16.24.

EXHIBIT 16.23 *Outside Stem and Yoke (OS&Y) Valve with Its Position Supervised by a Tamper Switch.*

EXHIBIT 16.24 *Control Valve with a Position Indicator.*

EDUFIRE.IR

16.9.3.3* Supervision.

A.16.9.3.3 The management is responsible for the supervision of valves controlling water supply for fire protection and should exert every effort to see that the valves are maintained in the normally open position. This effort includes special precautions to ensure that protection is promptly restored by completely opening valves that are necessarily closed during repairs or alterations. The precautions apply equally to valves controlling sprinklers and other fixed water-based fire suppression systems, hydrants, tanks, standpipes, pumps, street connections, and sectional valves.

Either one or a combination of the methods of valve supervision described in the following list is considered essential to ensure that the valves controlling fire protection systems are in the normally open position. The methods described are intended as an aid to the person responsible for developing a systematic method of determining that the valves controlling sprinkler systems and other fire protection devices are open.

Continual vigilance is necessary if valves are to be kept in the open position. Responsible day and night employees should be familiar with the location of all valves and their proper use.

The authority having jurisdiction should be consulted as to the type of valve supervision required. Contracts for equipment should specify that all details are to be subject to the approval of the authority having jurisdiction.

(1) *Central Station Supervisory Service.* Central station supervisory service systems involve complete, constant, and automatic supervision of valves by electrically operated devices and circuits continually under test and operating through an approved outside central station, in compliance with *NFPA 72*. It is understood that only such portions of *NFPA 72* that relate to valve supervision should apply.
(2) *Proprietary Supervisory Service Systems.* Proprietary supervisory service systems include systems where the operation of a valve produces some form of signal and record at a common point by electrically operated devices and circuits continually under test and operating through a central supervising station at the property protected, all in compliance with the standards for the installation, maintenance, and use of local protective, auxiliary protective, remote station protective, and proprietary signaling systems. It is understood that only portions of the standards that relate to valve supervision should apply.

The standard method of locking, sealing, and tagging valves to prevent, so far as possible, their unnecessary closing, to obtain notification of such closing, and to aid in restoring the valve to normal condition is a satisfactory alternative to valve supervision. The authority having jurisdiction should be consulted regarding details for specific cases.

Where electrical supervision is not provided, locks or seals should be provided on all valves and should be of a type acceptable to the authority having jurisdiction.

Seals can be marked to indicate the organization under whose jurisdiction the sealing is conducted. All seals should be attached to the valve in such a manner that the valves cannot be operated without breaking the seals. Seals should be of a character to prevent injury in handling and to prevent reassembly when broken. When seals are used, valves should be inspected weekly. The authority having jurisdiction can require a valve tag to be used in conjunction with the sealing.

A padlock, with a chain where necessary, is especially desirable to prevent unauthorized closing of valves in areas where valves are subject to tampering. When such locks are employed, valves should be inspected monthly.

If valves are locked, any distribution of keys should be restricted to only those directly responsible for the fire protection system. Multiple valves should not be locked together; they should be individually locked.

The individual performing the inspections should determine that each valve is in the normal position, properly locked or sealed, and so note on an appropriate record form while still at the valve. The authority having jurisdiction should be consulted for assistance in preparing a suitable report form for this activity.

EDUFIRE.IR

Identification signs should be provided at each valve to indicate its function and what it controls.

The position of the spindle of OS&Y valves or the target on the indicator valves cannot be accepted as conclusive proof that the valve is fully open. The opening of the valve should be followed by a test to determine that the operating parts have functioned properly.

The test consists of opening the main drain valve and permitting free flow of water until the gauge reading becomes stationary. If the pressure drop is excessive for the water supply involved, the cause should be determined immediately and the proper remedies taken. When sectional valves or other special conditions are encountered, other methods of testing should be used.

If it becomes necessary to break a seal for emergency reasons, the valve, following the emergency, should be opened by the person responsible for the fire protection of the plant, or his or her designated representative, and this person should apply a seal at the time of the valve opening. This seal should be maintained in place until such time as the authority having jurisdiction can replace it with one of its own.

Seals or locks should not be applied to valves reopened after closure until such time as the inspection procedure is carried out.

Where water is shut off to the sprinkler or other fixed water-based fire suppression systems, a guard or other qualified person should be placed on duty and required to continuously patrol the affected sections of the premises until such time as protection is restored.

During specific critical situations, a person should be stationed at the valve so that the valve can be reopened promptly if necessary. It is the intent of this section that the person remain within sight of the valve and have no other duties beyond this responsibility. This procedure is considered imperative when fire protection is shut off immediately following a fire.

An inspection of all other fire protection equipment should be made prior to shutting off water in order to make sure it is in operative condition.

In case of changes to fire protection equipment, all possible work should be done in advance of shutting off the water so that final connections can be made quickly and protection restored promptly. Many times it will be found that by careful planning open outlets can be plugged and protection restored on a portion of the equipment while the alterations are being made.

Where changes are being made in underground piping, all possible piping should be laid before shutting off the water for final connections. Where possible, temporary feed lines, such as temporary piping for reconnection of risers by hose lines, and so forth, should be used to afford maximum protection. The plant, public fire department, and other authorities having jurisdiction should be notified of all impairments to fire protection equipment.

16.9.3.3.1 Valves on connections to water supplies, sectional control and isolation valves, and other valves in supply pipes to sprinklers and other fixed water-based fire suppression systems shall be supervised by one of the following methods:

(1) Central station, proprietary, or remote station signaling service
(2) Local signaling service that will cause the sounding of an audible signal at a constantly attended point
(3) Valves locked in the correct position
(4) Valves located within fenced enclosures under the control of the owner, sealed in the open position, and inspected weekly as part of an approved procedure

The four methods of supervision listed in 16.9.3.3.1 help to ensure that a common mode of sprinkler system failure is minimized. According to the report *U.S. Experience with Sprinklers,* approximately one-third of system failures are attributable to closed or partially closed sprinkler system control valves. The means of supervision are listed in descending order of preference.

Central station, proprietary, or remote station supervision methods are preferred over the other methods listed. Supervisory signals received at alarm facilities are usually forwarded to trouble or maintenance crews responsible for the protected property. This method also allows for much quicker notification of the fire

EDUFIRE.IR

EXHIBIT 16.25 OS&Y Valve.

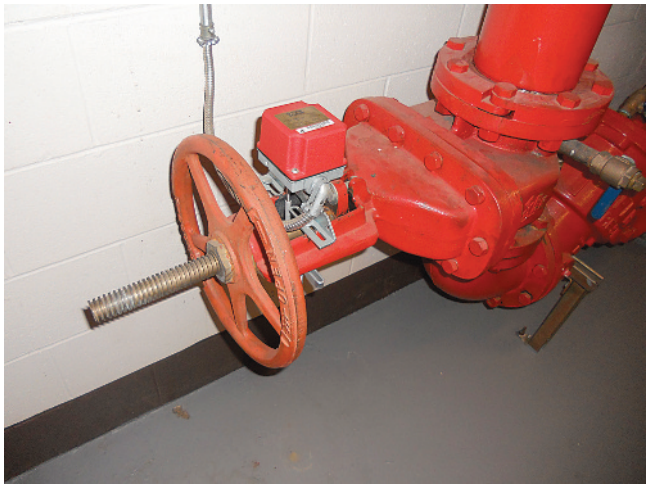

department. Early knowledge that a control valve has been closed for any reason can change the fire department's response and fire-fighting tactics. The use of electrical supervision has not, however, been mandated due to the cost of such a system, particularly in existing, large, sprawling facilities. Exhibit 16.25 shows an OS&Y valve supervised electronically with a tamper switch.

16.9.3.3.2 Floor control valves in high-rise buildings shall comply with 16.9.3.3.1(1) or 16.9.3.3.1(2).

16.9.3.3.3 The requirements of 16.9.3.3.1 shall not apply to underground gate valves with roadway boxes.

Roadway boxes typically are accessible only by trained personnel who are authorized to have access to these valves. In most cases, it is not practical to have these valves supervised or to make them an indicating type. The authorized personnel will have the ability to locate these valves and to operate them with a "tee" wrench. Because of this, these valves typically are not shut off accidently.

16.9.3.3.4 Where control valves are installed overhead, they shall be positioned so that the indicating feature is visible from the floor below.

One example of the requirement in 16.9.3.3.4 is the use of an OS&Y valve installed as a sectional control valve in a rack storage system. The valve should be installed so that the position of the stem (open or closed) is visible when viewed from the floor.

16.9.3.3.5 A listed backflow prevention assembly shall be permitted to be considered a control valve, provided both control valves are listed for fire protection system use and an additional control valve shall not be required.

16.9.3.4* Control Valve Accessibility. All control valves shall be located where accessible and free of obstructions.

A.16.9.3.4 It might be necessary to provide valves located in pits with an indicator post extending above grade or other means so that the valve can be operated without entering the pit.

Pits can be considered confined spaces, which can require a permit and additional safety equipment to enter and require additional personnel.

16.9.3.5 Control Valve Identification. Identification signs shall be provided at each valve to indicate its function and what it controls.

EDUFIRE.IR

N **16.9.4 Automated Valves.**

N **16.9.4.1** A listed indicating valve with automated controls shall be permitted.

N **16.9.4.2** A listed automated water control valve assembly with a reliable position indication connected to a remote supervisory station shall be permitted.

N **16.9.4.3** An automated water control valve shall be able to be operated manually as well as automatically.

16.9.5* Check Valves.

A.16.9.5 Where check valves are buried, they should be made accessible for maintenance. This can be accomplished by a valve pit or any means that renders the valve accessible. See Figure A.16.9.6.

All system check valves require internal inspection at 5-year intervals per NFPA 25. As such, it is not good practice to install them where future access for inspection and maintenance is limited or difficult, especially if they will have to be dug up.

16.9.5.1 Where there is more than one source of water supply, a check valve shall be installed in each connection.

FAQ [16.9.5.1]

Why does each source of water supply require a check valve?

Each source of water supply must have a check valve to isolate the supplies from each other.

16.9.5.2 A listed backflow prevention device shall be considered a check valve, and an additional check valve shall not be required.

In a fire situation, water flows from the highest pressure source. For example, consider a system supplied by a gravity tank, a city connection, and a fire department connection. The gravity tank has the highest pressure source, so initial flow would be from the gravity tank. If the tank's pressure dropped below that of the city connection, the tank's check valve would close, and the supply would come from the city. When the fire department connected to the system, the check valves in both automatic supplies would close, and the supply would come through the fire department pumps via the fire department connection.

16.9.5.3 Where cushion tanks are used with automatic fire pumps, no check valve is required in the cushion tank connection.

A cushion tank, where installed, is a part of the fire pump supply. The cushion tank is subject to the pump's check valve.

16.9.5.4 Check valves shall be installed in a vertical (flow upwards) or horizontal position in accordance with their listing.

16.9.5.5* Where a single wet pipe sprinkler system is equipped with a fire department connection, the alarm valve is considered a check valve, and an additional check valve shall not be required.

A.16.9.5.5 Where a system having only one dry pipe valve is supplied with city water and a fire department connection, it will be satisfactory to install the main check valve in the water supply connection immediately inside of the building. In instances where there is no outside control valve, the system indicating valve should be placed at the service flange, on the supply side of all fittings.

An alarm valve is a check valve designed to activate waterflow alarms. Another check valve would be redundant and would increase the friction loss characteristics of the system because an alarm check valve has the same checking ability as a gravity check valve. Exhibit 16.26 shows a wet pipe system employing an alarm valve that also functions as the check valve for the water supply source.

EDUFIRE.IR

EXHIBIT 16.26 Wet Pipe System with Alarm Check Valve.

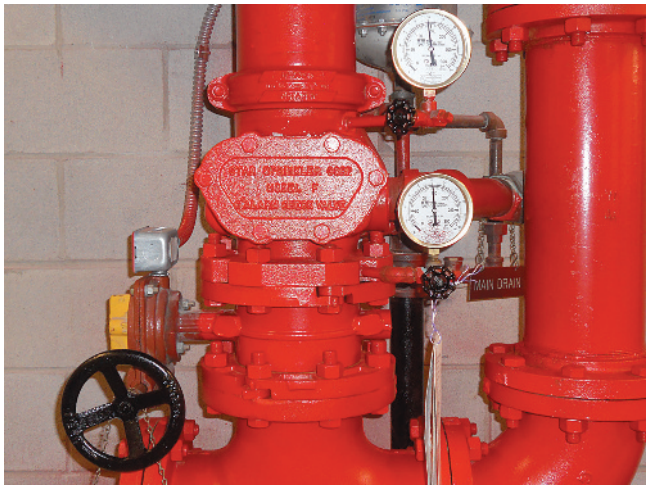

16.9.6* Control Valves with Check Valves.

The intent of 16.9.6 in requiring control valves on both sides of a check valve is to isolate the check valve for maintenance or repair while allowing the system to remain in service. If the system has only one automatic supply, an indicating, or gate, valve on the system side of the check valve is not required. An alarm valve is a specialized device, and control valves are not required on the system side of alarm check valves.

A.16.9.6 See Figure A.16.9.6. For additional information on controlling valves, see NFPA 22.

16.9.6.1 In a connection serving as one source of supply, listed indicating valves or post-indicator valves shall be installed on both sides of all check valves required in 16.9.5.

All system check valves require internal condition inspection at 5-year intervals per NFPA 25 requirements. Installing gate valves on either side of a buried check valve allows the check valve to be isolated for this purpose. However, the practice of burying check valves should be avoided where possible due to the difficulty and expense of maintaining check valves below ground.

16.9.6.2 The city services control valve (non-indicating control valve) shall be permitted to serve as the supply side control valve.

16.9.6.3 The requirements of 16.9.6.1 shall not apply to the check valve located in the fire department connection piping, and there shall be no control valves in the fire department connection piping.

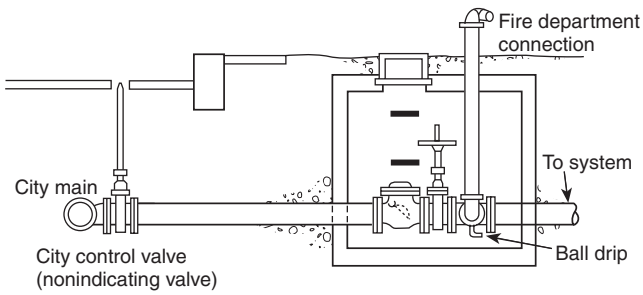

***FIGURE A.16.9.6** Pit for Gate Valve, Check Valve, and Fire Department Connection.*

EDUFIRE.IR

16.9.6.4 The requirements of 16.9.6.1 shall not apply where the city connection serves as the only automatic source of supply to a wet pipe sprinkler system; a control valve is not required on the system side of the check valve or the alarm check valve.

16.9.6.5* Control Valves for Gravity Tanks. Gravity tanks shall have listed indicating valves installed on both sides of the check valve.

A.16.9.6.5 For additional information on controlling valves, see NFPA 22.

16.9.7* Pumps. When a pump is located in a combustible pump house or exposed to danger from fire or falling walls, or when a tank discharges into a private fire service main fed by another supply, either the check valve in the connection shall be located in a pit or the control valve shall be of the post-indicator type located a safe distance outside buildings.

The intent of 16.9.7 is to ensure that the control valves for the fire pump discharge piping remain accessible during a fire. Fire pumps should not be located where they will be subject to falling walls or impaired during an emergency. Fire fighters could be in such locations during an emergency and need to escape quickly.

A.16.9.7 Check valves on tank or pump connections, when located underground, can be placed inside of buildings and at a safe distance from the tank riser or pump, except in cases where the building is entirely of one fire area, when it is ordinarily considered satisfactory to locate the check valve overhead in the lowest level.

16.9.8 Pressure-Reducing Valves.

16.9.8.1 In portions of systems where all components are not listed for pressure greater than 175 psi (12 bar) and the potential exists for normal (nonfire condition) water pressure in excess of 175 psi (12 bar), a listed pressure-reducing valve shall be installed and set for an outlet pressure not exceeding 165 psi (11 bar) at the maximum inlet pressure.

Pressure-reducing valves and pressure-control valves allow a predetermined quantity of water to pass through the system at some established pressure. These devices can be installed in a system riser that supports the entire system or at individual feed mains that supply a floor. The installation of these devices requires special knowledge. All provisions contained in the listing criteria, as well as the manufacturer's instructions, must be followed. These valves also require routine flow testing. Provisions for such testing should be provided as part of the initial design. When the pressure on the system exceeds 165 psi (11 bar), the valve will open and relieve pressure on the system. The relief valve is arranged so that waterflow due to excess pressure will drain through the system's main drain.

16.9.8.2 Pressure gauges shall be installed on the inlet and outlet sides of each pressure-reducing valve.

16.9.8.3* A listed relief valve of not less than ½ in. (15 mm) in size shall be provided on the discharge side of the pressure-reducing valve set to operate at a pressure not exceeding the rated pressure of the components of the system.

A.16.9.8.3 Where the relief valve operation would result in water being discharged onto interior walking or working surfaces, consideration should be given to piping the discharge from the valve to a drain connection or other safe location.

16.9.8.4 A listed indicating valve shall be provided on the inlet side of each pressure-reducing valve, unless the pressure-reducing valve meets the listing requirements for use as an indicating valve.

16.9.8.5 Means shall be provided downstream of all pressure-reducing valves for flow tests at sprinkler system demand.

The requirement in 16.9.8.5 for a means of flow testing downstream of all pressure-reducing valves facilitates their testing. NFPA 25 currently requires that these devices be tested every 5 years. In high-rise buildings, where pressure-reducing valves are typically used, a drain riser is normally provided and should be

EDUFIRE.IR

sized to accommodate the testing of full sprinkler flow demand. The intent of 16.9.8.5 is to provide an adequately sized drain riser or other means to allow full flow testing of these valves for acceptance testing and future inspection and testing requirements.

16.9.9* Post-Indicator Valves.

A.16.9.9 Outside control valves are suggested in the following order of preference:

(1) Listed indicating valves at each connection into the building at least 40 ft (12 m) from buildings if space permits
(2) Control valves installed in a cutoff stair tower or valve room accessible from outside
(3) Valves located in risers with indicating posts arranged for outside operation
(4) Key-operated valves in each connection into the building

Post-indicator valves should be located not less than 40 ft (12 m) from buildings. When post-indicator valves cannot be placed at this distance, they are permitted to be located closer, or wall post-indicator valves can be used, provided they are set in locations by blank walls where the possibility of injury by falling walls is unlikely and from which people are not likely to be driven by smoke or heat. Usually, in crowded plant yards, they can be placed beside low buildings, near brick stair towers, or at angles formed by substantial brick walls that are not likely to fall.

EXHIBIT 16.27 Post-Indicator Valve.

16.9.9.1 Where post-indicator valves are used, they shall be set so that the top of the post is 32 in. to 40 in. (800 mm to 1000 mm) above the final grade.

Post-indicator valves should be easily accessible and at a height that allows them to be easily operated. NFPA 13 formerly required post-indicator valves controlling sprinkler systems to be set so that the top of the post was 36 in. (900 mm) above grade. This requirement was expanded in the 2010 edition to allow some flexibility in placement and to coordinate with requirements in NFPA 24, *Standard for the Installation of Private Fire Service Mains and Their Appurtenances*, for other post-indicating valves, such as sectional control valves in fire protection underground.

16.9.9.2 Post-indicator valves shall be properly protected against mechanical damage where needed.

Post-indicator valves should be located where they are not subject to mechanical damage. Post-indicator valves located along roadways, near loading docks, or in other areas where they could be hit by vehicular traffic or otherwise damaged should be protected. Exhibit 16.27 shows a post-indicator valve located near a roadway but not so close that additional protection is necessary. Exhibit 16.28 shows wall post-indicator valves, which are also permitted.

16.9.9.3 The requirements of 16.9.9.1 shall not apply to wall post-indicator valves.

Wall post-indicator valves are not required to be installed at any specific height since the difference between grade level outside the building and the floor elevation may make it impossible. However, wall post-indicator valves should be installed so that they are accessible and can be operated in an emergency, and the height above grade should be reasonable. When the difference in elevation between the building floor and the outside grade would result in a location that makes the valve inaccessible, an outside post-indicator valve or other means to make the valve accessible should be considered. Wall post-indicator valves are not as desirable as post-indicator valves because they are close to the building and could become inaccessible due to the heat from a fire or falling debris.

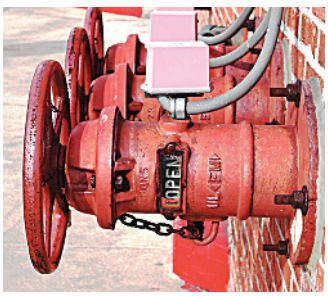

EXHIBIT 16.28 Wall Post-Indicator Valves.

16.9.10 Valves in Pits.

16.9.10.1 Where it is impractical to provide a post-indicator valve, valves shall be permitted to be placed in pits with permission of the authority having jurisdiction.

Wherever possible, valves that can be operated above grade should be used. Valve pits are considered confined spaces and can be a safety hazard. Valves in the pit might need to be arranged so they can be actuated remotely via an extension handle, allowing the valve to be operated in an emergency without the need to enter the pit.

EDUFIRE.IR

16.9.10.2* Valve Pit Construction.

A.16.9.10.2 A valve wrench with a long handle should be provided at a convenient location on the premises.

16.9.10.2.1 When used, valve pits shall be of adequate size and accessible for inspection, operation, testing, maintenance, and removal of equipment contained therein.

16.9.10.2.2 Valve pits shall be constructed and arranged to properly protect the installed equipment from movement of earth, freezing, and accumulation of water.

16.9.10.2.3 Poured-in-place or precast concrete, with or without reinforcement, or brick (all depending upon soil conditions and size of pit) shall be appropriate materials for construction of valve pits.

16.9.10.2.4 Other approved materials shall be permitted to be used for valve pit construction.

16.9.10.2.5 Where the water table is low and the soil is porous, crushed stone or gravel shall be permitted to be used for the floor of the pit.

16.9.10.2.6 Valve pits located at or near the base of the riser of an elevated tank shall be designed in accordance with NFPA 22.

16.9.10.3 Valve Pit Marking. The location of the valve shall be clearly marked, and the cover of the pit shall be kept free of obstructions.

In cold climates, the pit's cover can be covered with snow or ice, making the pit inaccessible and the cover difficult to find. To maintain pit accessibility, the locations must be clearly marked and snow or ice promptly removed, as required by 16.9.10.3.

16.9.11 Floor Control Valve Assemblies.

16.9.11.1 Multistory buildings exceeding two stories in height shall be provided with a floor control valve, check valve, main drain valve, and flow switch for isolation, control, and annunciation of water flow for each individual floor level.

The system size limitations are related to the largest area that NFPA 13 considers acceptable to be down at a given time for system maintenance or repairs. Prior to the 2013 edition of the standard, floor control valves were not required on each floor, so a single system riser or control valve could be used to protect multiple floors. Because the area limitation applied to an area as opposed to a floor, there were buildings with two or three floors protected by a single sprinkler system with a total protected area as much as 150,000 ft^2 (13,940 m^2). However, beginning with the 2013 edition, floor control valves are required for buildings more than two stories in height, and each is considered to be a separate sprinkler system.

An exception allows multiple floors to be supplied by a single riser, provided all floors combined do not exceed the system area limitations of 4.5.1.

16.9.11.2 The floor control valve, check valve, main drain valve, and flow switch required by 16.9.11.1 shall not be required where sprinklers on the top level of a multistory building are supplied by piping on the floor below.

16.9.11.3 The floor control valve, check valve, main drain valve, and flow switch required by 16.9.11.1 shall not be required where the total area of all floors combined does not exceed the system protection area limitations of 4.5.1.

16.9.11.4 The requirements of 16.9.11 shall not apply to dry systems in parking garages.

16.9.11.5* Where individual floor/zone control valves are not provided, a flanged joint or mechanical coupling shall be used at the riser at each floor for connections to piping serving floor areas in excess of 5000 ft^2 (465 m^2).

A.16.9.11.5 See Figure A.16.9.11.5.

EDUFIRE.IR

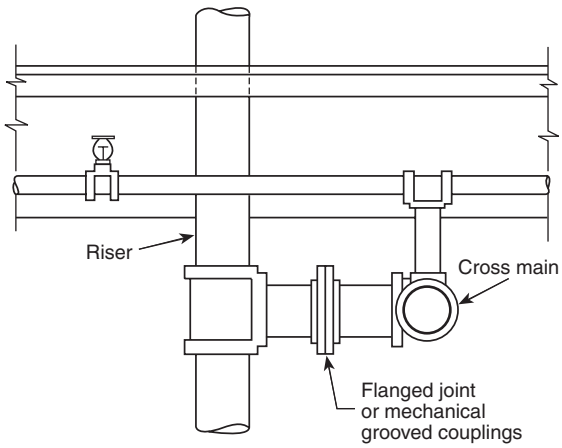

FIGURE A.16.9.11.5 *One Arrangement of Flanged Joint at Sprinkler Riser.*

16.9.12* Identification of Valves.

A.16.9.12 The intent of 16.9.12 is to provide assistance in determining the area of a building served by a particular control valve.

16.9.12.1 All control, drain, venting, and test connection valves shall be provided with permanently marked weatherproof metal or rigid plastic identification signs.

The signs required in 16.9.12.1, combined with the general information sign that identifies the location of devices, are significant in helping to maintain the system. This is especially true for drain valves that need to be regularly drained before and during freezing weather. From an operational perspective, they also improve the likelihood that the correct device has been selected.

16.9.12.2 The identification sign shall be secured with corrosion-resistant wire, chain, or other approved means.

16.9.12.3 The control valve sign shall identify the portion of the building served.

The requirement in 16.9.12.3 addresses the situation in which a valve room has numerous valves, making it difficult to determine which valve services the area or floor where the flow needs to be controlled. A sign is also required by 16.9.12.3.1 to indicate the location of valves if more than one valve controls the system.

16.9.12.3.1* Systems that have more than one control valve that must be closed to work on a system or space shall have a sign referring to existence and location of other valves.

A.16.9.12.3.1 Care should be taken to ensure that all water supplies are isolated before work begins. Work on systems by shutting one valve and not knowing about another valve could result in unexpected water discharge.

16.10 Drainage.

The requirements in the paragraphs within Section 16.10 regarding drains are necessary to facilitate system maintenance, repair, modifications, and additions. When systems are to be taken out of service for any reason, properly sized and arranged drains help minimize the amount of time the system is out of service. For dry pipe and preaction systems protecting cold environments, immediate drainage of any water that

EDUFIRE.IR

has entered the system is critical. Properly sized drains and the requirements in 16.10.3 for installing the pipe at a specific pitch address the need for immediate drainage. Additionally, after a system is involved in a fire and the fire is extinguished, the system needs to be shut down and drained so that the sprinklers that operated can be replaced.

Some of these drain features are also used to check the status of the water supply. NFPA 25 provides guidance on the main drain test, which is accomplished using the drain connections specified in 16.10.4.

16.10.1 General. All sprinkler pipe and fittings shall be installed so that the system can be drained.

Ideally, the entire system should be arranged so that all water can be drained through the main drain. If this cannot be accomplished, auxiliary drainage facilities in accordance with 16.10.5 and sectional drainage in accordance with 16.10.4.3 need to be sized and arranged with consideration for the type of system and the volume of trapped piping.

16.10.2 Wet Pipe Systems.

16.10.2.1 On wet pipe systems, sprinkler pipes shall be permitted to be installed level.

In pipe schedule systems, the reduction in pipe size from the supply to the branch lines has the effect of a slight pitch when the piping is installed level. This effect is due to the slope of the reducing fittings necessitated by the reduction in pipe size. In hydraulically calculated systems, especially when a looped or gridded piping configuration is installed, the piping will have less natural pitch than pipe schedule systems. As long as the piping is installed level, most of the water will drain out of the piping, and since these systems are installed in areas that are not subject to freezing conditions, the small amount of water that might not drain from the piping is not considered a problem.

16.10.2.2 Trapped piping shall be drained in accordance with 16.10.5.

16.10.3 Dry Pipe and Preaction Systems. Piping shall be pitched to drain as stated in 16.10.3.1 through 16.10.3.3.

16.10.3.1 Dry Pipe Systems in Nonrefrigerated Areas. In dry pipe system, branch lines shall be pitched at least ½ in. per 10 ft (4 mm/m), and mains shall be pitched at least ¼ in. per 10 ft (2 mm/m) in nonrefrigerated areas.

16.10.3.2 Preaction Systems. In preaction systems, branch lines shall be pitched at least ½ in. per 10 ft (4 mm/m), and mains shall be pitched at least ¼ in. per 10 ft (2 mm/m).

16.10.3.3 Dry Pipe and Preaction Systems in Refrigerated Areas. Branch lines shall be pitched at least ½ in. per 10 ft (4 mm/m), and mains shall be pitched at least ½ in. per 10 ft (4 mm/m) in refrigerated areas.

Because dry pipe systems and preaction systems are usually installed in areas subject to freezing, proper drainage is critical due to the potential freezing of a pipe network after a system trip. Water trapped in the pipe network can begin to freeze in a matter of minutes in systems installed in structures that maintain temperatures at or below 0°F (–18°C). It should also be noted that where water is sitting in the belly of the piping system, corrosion will occur at the points where air and water meet along the internal wall of the pipe. This corrosion can limit the life of the pipe and cause calcium deposits, which can grow large enough to dislodge and then plug sprinklers or smaller pipes during a fire.

16.10.4 System, Main Drain, or Sectional Drain Connections.

Paragraphs 16.10.4 through 16.10.5.3.6 describe the facilities needed to drain any portion of a system in an efficient manner without undue risk of water damage. The arrangement of main, sectional, and auxiliary drains expedites the manner in which a system can be taken out of service for maintenance or repairs.

16.10.4.1 Provisions shall be made to properly drain all parts of the system.

EDUFIRE.IR

FAQ [16.10.4.6]

What purpose does the main drain test connection serve?

Test connections and drain pipes are used to drain systems when repairs are necessary or when dry pipe valves have tripped. They also are used to help confirm that the proper water supply is available at the system riser and on the system side of all check valves, control valves, and underground piping.

16.10.4.2 Drain connections for system supply risers and mains shall be sized as shown in Table 16.10.4.2.

TABLE 16.10.4.2 Drain Size

Riser or Main Size [in. (mm)]	*Size of Drain Connection [in. (mm)]*
Up to 2 (50)	¾ (20) or larger
2½ (65), 3 (80), 3½ (90)	1¼ (32) or larger
4 (100) and larger	2 (50) or larger

16.10.4.3 Where an interior sectional or floor control valve(s) is provided, it shall be provided with a drain connection having a minimum size as shown in Table 16.10.4.2 to drain that portion of the system controlled by the sectional valve.

16.10.4.4 Drains shall discharge outside or to a drain connection capable of handling the flow of the drain.

FAQ [16.10.4.6]

Can water supply tests be conducted through the main drain test connection?

Test connections or drain pipes normally are smaller than all other water supply piping. Therefore, they are not capable of large-scale flow tests and should not be used as a means of evaluating the available water supply. Waterflow tests conducted through the main drain test do not provide an accurate reading of the water supply. One reason for the inaccurate readings is the unknown friction loss values of check valves under low flow conditions.

16.10.4.5 For those drains serving pressure-reducing valves, the drain, drain connection, and all other downstream drain piping shall be sized to permit a flow of at least the greatest system demand supplied by the pressure-reducing valve.

Piping controlled by sectional valves represents a significant segment of the sprinkler system. Sectional or floor control valves serve the same function for that portion of the system as the main drain does for the entire system. The use of express drains in high-rise buildings is one method of disposing of water from upper floors. Express drains or floor drains used where the drain does not drain directly to the outside must be capable of handling the flow and not restrict it.

With regard to 16.10.4.5, NFPA 25 requires annual flow testing of pressure-regulating devices. To facilitate flow testing, the drain connection serving such devices must be capable of handling the system flow rate and pressure for the area served by that pressure-reducing valve.

16.10.4.6* Main Drain Test Connections.

A.16.10.4.6 See Figure A.16.10.4.6(a) and Figure A.16.10.4.6(b).

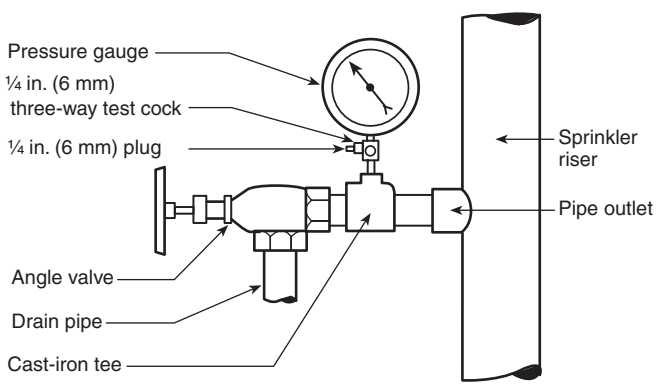

FIGURE A.16.10.4.6(a) Unacceptable Pressure Gauge Location.

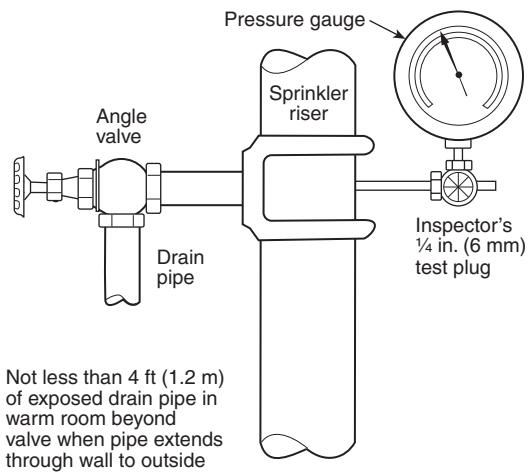

FIGURE A.16.10.4.6(b) Drain Connection for System Riser.

EDUFIRE.IR

16.10.4.6.1 Main drain test connections shall be provided at locations that will permit flow tests of water supplies and connections.

16.10.4.6.2 Main drain test connections shall be installed that the valve can be opened wide for a sufficient time to assure a proper test without causing water damage.

16.10.4.6.3 Main drain connections shall be sized in accordance with 16.10.4.2.

16.10.4.7 The test connections required by 16.10.4.6 shall be permitted to be used as main drain connections.

16.10.4.8 Where drain connections for floor control valves are tied into a common drain riser, the drain riser shall be one pipe size larger downstream of each size drain connection tying into it.

16.10.4.9 Where subject to freezing, a minimum 4 ft (1.2 m) of exposed drain pipe shall be in a heated area between the drain valve and the exterior wall when drain piping extends through the wall to the outside.

Drains commonly discharge through a wall to the outside. When systems are installed where the exterior ambient temperatures are subject to freezing, the required 4 ft (1.2 m) of pipe beyond the valve provides a frost break that prevents water in the system from freezing due to cold air from the outside.

FAQ [16.10.4.6.1]

Why are main drain tests conducted?

A 2 in. (50 mm) main drain test, as it is commonly called, normally consists of opening the 2 in. (50 mm) main drain wide until the pressure stabilizes. Records are kept of these tests to detect possible deterioration of water supplies or to detect valves in the overall water supply system that might have been closed. The 2 in. (50 mm) drain test on new systems necessitates the establishment of a benchmark when the system is first approved during the acceptance tests. See NFPA 25 for additional information on conducting 2 in. (50 mm) drain tests.

16.10.5 Auxiliary Drains.

Auxiliary drains are necessary for trapped piping. The type of auxiliary drain, its size, and its arrangement depend on the type of system, whether the piping is subject to freezing conditions, and the volume of trapped piping. Subsection 28.6.2 requires that the location of these drains be identified to aid in locating them.

16.10.5.1 Auxiliary drains shall be provided where a change in piping direction prevents drainage of system piping through the main drain valve.

16.10.5.2 Auxiliary Drains for Wet Pipe Systems and Preaction Systems in Areas Not Subject to Freezing.

16.10.5.2.1* Where the capacity of isolated trapped sections of pipe is 50 gal (200 L) or more, the auxiliary drain shall consist of a valve not smaller than 1 in. (25 mm), piped to an accessible location.

A.16.10.5.2.1 An example of an accessible location would be a valve located approximately 7 ft (2.1 m) above the floor level to which a hose could be connected to discharge the water in an acceptable manner.

16.10.5.2.2 Where the capacity of isolated trapped sections of pipe is more than 5 gal (20 L) and less than 50 gal (200 L), the auxiliary drain shall consist of a valve ¾ in. (20 mm) or larger and a plug or a nipple and cap.

When the trapped section exceeds 5 gal (20 L), a drain valve is required. A drain valve allows the trapped piping to be emptied in a reasonable amount of time. The valve outlet also permits the trapped portion to be drained without creating a nuisance water spill. Exhibit 16.29 shows an auxiliary drain consisting of a ball valve.

EXHIBIT 16.29 Auxiliary Drain Consisting of Ball Valve. (Courtesy United Association Sprinkler Fitter Local 268 Training Center)

16.10.5.2.3 Where the capacity of trapped sections of pipes in wet systems is less than 5 gal (20 L), one of the following arrangements shall be provided:

(1) An auxiliary drain shall consist of a nipple and cap or plug not less than ½ in. (15 mm) in size.
(2) An auxiliary drain shall not be required for trapped sections less than 5 gal (20 L) where the system piping can be drained by removing a single pendent sprinkler.
(3) Where flexible couplings or other easily separated connections are used, the nipple and cap or plug shall be permitted to be omitted.

EDUFIRE.IR

The need to drain trapped piping sections in wet pipe systems is not typically a common event. Therefore, a nipple and cap or a plug is adequate where the volume of the trapped section is 5 gal (20 L) or less. This small quantity of water can be emptied into a 5 gal (20 L) bucket. A nipple and cap are preferable to a plug because of the comparative ease with which they can be removed. For easier removal, the plug should be brass.

Paragraph 16.10.5.2.3 recognizes that the small volume of water trapped in one pendent sprinkler can be drained as readily through the sprinkler connection as through a plug. Requiring a drain is unrealistic where pendent sprinklers are installed below a ceiling and are supplied directly from branch lines concealed above the ceiling. Paragraph 16.10.5.2.3 recognizes that many of the fittings, similar to grooved couplings, currently used can be separated easily and used to drain small trapped portions of a wet pipe system with little inconvenience.

16.10.5.2.4 Tie-in drains shall not be required on wet pipe systems and preaction systems protecting nonfreezing environments.

Tie-in drains are cross connections of the ends of trapped branch lines that are piped to a single drain valve. These drains are not required on wet pipe and preaction systems protecting nonfreezing environments, because such piping does not need to be drained as quickly as systems protecting cold environments.

16.10.5.3 Auxiliary Drains for Dry Pipe Systems and Preaction Systems.

16.10.5.3.1 Auxiliary drains located in areas subject to freezing shall be accessible.

16.10.5.3.2 Auxiliary drains located in areas maintained at freezing temperatures shall be accessible and shall consist of a valve not smaller than 1 in. (25 mm) and a plug or a nipple and cap.

16.10.5.3.3 Where the capacity of trapped sections of pipe is less than 5 gal (20 L), the auxiliary drain shall consist of a valve not smaller than ½ in. (15 mm) and a plug or a nipple and cap.

16.10.5.3.4 Auxiliary drains shall not be required for pipe drops supplying dry pendent sprinklers installed in accordance with 8.2.2, 8.3.2.5, and 8.7.3.4.

Auxiliary drains for dry pipe and preaction systems that are subject to freezing, such as those in freezers, need to be accessible, as stated in 16.10.5.3.1. This requirement is so they can be drained quickly and prevent water that has entered the system from freezing, either because the dry pipe valve tripped or because of moisture condensation from the pressurized air in the system. A 1 in. (25 mm) valve is required when the trapped volume is greater than 50 gal (200 L), as noted in 16.10.5.2.1. Smaller trapped sections of piping of less than 5 gal (20 L) can use a ½ in. (15 mm) valve, as stated in 16.10.5.3. An auxiliary drain is not required where pendent sprinklers in a heated area are supplied by piping that is also in a heated area (see 16.10.5.3.4).

ASK THE AHJ

Can the authority having jurisdiction limit the location or number of auxiliary drains on a dry system?

If the drains are located in an accessible location, NFPA 13 does not restrict the number or location of auxiliary drains. However, the larger the number of auxiliary drains, the more likely it is that the owner will miss some of those drains when the dry pipe system is drained. Note that, per 28.6.2(14), NFPA 13 requires an information sign on the riser indicating where any auxiliary drains are located.

16.10.5.3.5 Where the capacity of isolated trapped sections of system piping is more than 5 gal (20 L), the auxiliary drain shall consist of two 1 in. (25 mm) valves and one 2 in. × 12 in. (50 mm × 300 mm) condensate nipple or equivalent, accessibly located in accordance with Figure 16.10.5.3.5, or a device listed for this service.

EDUFIRE.IR

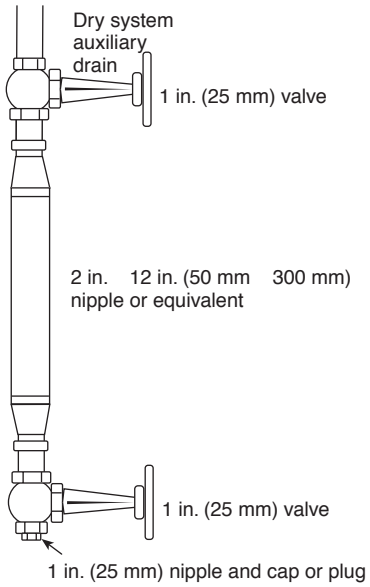

FIGURE 16.10.5.3.5 *Dry System Auxiliary Drain.*

The condensate nipple, or its equivalent, illustrated in Figure 16.10.5.3.5 is required for each section of trapped piping with more than 5 gal (20 L) capacity in a dry pipe system and in a preaction system protecting cold environments. The condensate nipple is capable of collecting and removing moisture from the system while minimizing the potential for excessive loss of air pressure and possible unplanned operation of a dry pipe valve. The upper valve normally is open, allowing moisture to enter the chamber, while the lower valve is closed and sealed to avoid leaks. To drain the chamber, the upper valve is closed to temporarily isolate it from the system, and the lower valve is opened to remove the accumulated condensate. If inside and outside temperatures are extreme, isolating the exterior drain pipe from the interior drain pipe with a threaded fitting can be desirable. This separation can have the effect of limiting moisture buildup by checking the transfer of a high exterior ambient temperature to the cooler interior temperature of the drain pipe. See the commentary following 16.10.5.3.6.

16.10.5.3.6 Tie-in drains shall be provided for multiple adjacent trapped branch pipes and shall be only 1 in. (25 mm). Tie-in drain lines shall be pitched a minimum of ½ in. per 10 ft (4 mm/m).

When two or more adjacent branch lines are trapped in a dry pipe or preaction system, the ends of the branch lines must be piped together and run to a low point drain at least 1 in. (25 mm) in size, as stated in 16.10.5.3.5. The drain needs to be equipped with a valve and a nipple and cap or a valve with a plug to facilitate moisture removal from the system.

Properly pitching tie-in drains and removing condensate from drains prior to freezing weather are extremely important measures. Typically, tie-in drains consist of smaller-size piping connected to a rather large volume of piping, and, with these smaller drains, freeze-ups are possible.

Tie-in drains on multiple adjacent branch lines should be avoided, if possible, because the use of tie-in drains, in effect, creates a gridded system. Gridded dry pipe systems and gridded double interlock preaction systems are prohibited by 8.3.2.6. In these types of systems, all the air in the piping must be evacuated before a steady flow of water is discharged from the operated sprinklers. A gridded pipe arrangement is likely to result in excessive time delays before effective sprinkler discharge occurs. Tie-in drains are considered necessary to allow rapid drainage of systems protecting cold environments. The restriction that tie-in drains be limited to 1 in. (25 mm) should help minimize delays.

16.10.5.3.7 Systems with low point drains shall have a sign at the dry pipe or preaction valve indicating the number of low point drains and the location of each individual drain.

EDUFIRE.IR

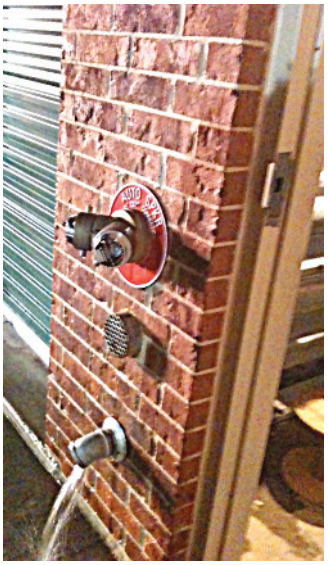

EXHIBIT 16.30 Example of System Main Drain Discharging to Atmosphere. (Courtesy of American Fire Sprinkler Association)

It is important to locate all drains and perform the appropriate inspection, testing, and maintenance (ITM) activities, in accordance with NFPA 25, prior to the onset of freezing weather.

16.10.6 Discharge of Drain Valves.

16.10.6.1 Direct interconnections shall not be made between sprinkler drains and sewers.

16.10.6.2 The drain discharge shall conform to any health or water department regulations.

The restriction on the cross connection of sprinkler drains and sewers in 16.10.6.1 is intended to prevent any harmful element from entering the sprinkler system by way of the drain connection and then the public water system by way of the sprinkler system. An air gap is the method usually employed to avoid a direct connection and potential backflow. Exhibit 16.30 shows the main drain discharging to atmosphere.

The valve between the sprinkler system and the drain connection and the check valve between the sprinkler system and the public water supply, as required by 16.10.6.2, provide sufficient protection against contamination. This additional regulation prohibiting direct interconnections is considered necessary to further enhance protection of the potable water.

The drain connections on risers must be capable of handling the water discharged under normal system pressure. In some situations, such as in high-rise buildings where the drain lines can be long, making the drain riser one size larger than the largest drain connection (see 16.10.4.8) might not be sufficient to prevent overpressurization of the normally atmospheric drain line from a high-pressure system.

16.10.6.3 Where drain pipes are buried underground, approved corrosion-resistant pipe shall be used.

16.10.6.4 Drain pipes shall not terminate in blind spaces under the building.

The drain discharge must be piped in a manner that allows the operator to ascertain that the drain is not obstructed and that it is not causing water damage.

16.10.6.5 Where exposed to the atmosphere, drain pipes shall be fitted with a turned-down elbow.

The turned-down elbow discourages the use of the drain piping as a refuse receptacle and minimizes the possibility of damage to property or of passersby getting wet.

16.10.6.6 Drain pipes shall be arranged to avoid exposing any of the water-filled portion of the sprinkler system to freezing conditions.

When systems are installed where the exterior ambient temperatures are subject to freezing, at least 4 ft (1.2 m) of the drain line beyond the valve should be installed in a warm room. The recommended 4 ft (1.2 m) of pipe beyond the valve provides a frost break that prevents water in the system from freezing due to cold air from outside. Additionally, all moisture needs to be removed from trapped, unheated areas in dry pipe and preaction systems.

SEE ALSO

Chapter 13 of NFPA 25 for auxiliary drain maintenance requirements.

16.11 System Attachments.

16.11.1 Attachments — General.

16.11.1.1* An alarm unit shall include a listed mechanical alarm, horn, or siren or a listed electric gong, bell, speaker, horn, or siren.

A.16.11.1.1 Audible alarms are normally located on the outside of the building. Listed electric gongs, bells, horns, or sirens inside the building, or a combination of such used inside and outside, are sometimes advisable.

Outside alarms might not be necessary where the sprinkler system is used as part of a central station, auxiliary, remote station, or proprietary signaling fire alarm system, utilizing listed audible inside alarm devices.

EDUFIRE.IR

A water motor alarm arrangement to a wet pipe system is shown in Exhibit 3.48. Paragraph 16.11.1.1 does not prohibit the use of visual alarm devices to supplement the audible alarm.

16.11.1.2* Outdoor water motor-operated or electrically operated bells shall be weather-proofed and guarded.

A.16.11.1.2 All alarm apparatus should be so located and installed that all parts are accessible for inspection, removal, and repair, and such apparatus should be substantially supported.

The water motor gong bell mechanism should be protected from weather-related elements such as rain, snow, or ice. To the extent practicable, it should also be protected from other influencing factors such as birds or other small animals that might attempt to nest in such a device.

Exhibit 16.31 shows an example of a water motor gong and outside bell. Internally moving parts of a water motor gong are expected to be adequately protected from a variety of problems, such as snow, ice, bird nests, and mechanical damage. The identified concerns are intended to give the user an idea of the types of problems to avoid. Some of these concerns can be difficult to guard against in all cases.

EXHIBIT 16.31 *Water Motor and Gong Assembly. (Courtesy of Reliable Automatic Sprinkler Co., Inc.)*

16.11.1.3 All piping to water motor-operated devices shall be galvanized steel, brass, copper, or other approved metallic corrosion-resistant material of not less than ¾ in. (20 mm) nominal pipe size.

Most listed alarm valves, listed dry pipe valves, and listed deluge valves in NFPA 13 contain supplemental trim and pre-piped outlets for alarm lines. In accordance with 16.11.1.3, the trim, outlets, and associated alarm piping must be verified to be corrosion resistant. The use of corrosion-resistant piping reduces the probability of clogging in the orifice in the water motor.

16.11.1.4 Piping between the sprinkler system and a pressure-actuated alarm-initiating device shall be galvanized steel, brass, copper, or other approved metallic corrosion-resistant material of not less than ⅜ in. (10 mm) nominal pipe size.

16.11.2* Sprinkler Alarms/Waterflow Alarms.

A.16.11.2 Central station, auxiliary, remote station, or proprietary protective signaling systems are a highly desirable supplement to local alarms, especially from a safety to life standpoint. *(See 16.11.10.)*

Approved identification signs, as shown in Figure A.16.11.2, should be provided for outside alarm devices. The sign should be located near the device in a conspicuous position and should be worded as follows:

SPRINKLER FIRE ALARM — WHEN BELL RINGS
CALL FIRE DEPARTMENT OR POLICE.

FIGURE A.16.11.2 *Identification Sign.*

FAQ [16.11.2]

Does NFPA 13 require that waterflow from the sprinkler system activate the building fire alarm system?

Subsection 16.11.2 does not mandate the activation of a building fire alarm system when the sprinkler system is activated. If this feature is desired or specifically required by a building code, details, such as electrical circuit arrangement, time for alarm annunciation, and acceptable components, on this type of alarm system are contained in *NFPA 72®, National Fire Alarm and Signaling Code®*.

EDUFIRE.IR

16.11.2.1 Local Waterflow Alarms. A local waterflow alarm shall be provided on every sprinkler system having more than 20 sprinklers.

16.11.3 Waterflow Detection Devices.

16.11.3.1 Wet Pipe Systems. The alarm apparatus for a wet pipe system shall consist of a listed alarm check valve or other listed waterflow detection alarm device with the necessary attachments required to give an alarm.

16.11.3.2 Dry Pipe Systems.

16.11.3.2.1 The alarm apparatus for a dry pipe system shall consist of listed alarm attachments to the dry pipe valve.

16.11.3.2.2 Where a dry pipe valve is located on the system side of an alarm valve, connection of the actuating device of the alarms for the dry pipe valve to the alarms on the wet pipe system shall be permitted.

In some instances, small dry pipe systems are needed in areas of otherwise heated buildings, such as under outside canopies, on loading docks, in unheated penthouses, and in attics. In those cases, an auxiliary dry pipe system supplied from the building's wet pipe system can be more economical to install. The waterflow alarm from the dry pipe system can be connected to the wet pipe system alarm sounding or annunciating device.

16.11.3.3 Preaction and Deluge Systems. The alarm apparatus for deluge and preaction systems shall consist of alarms actuated independently by the detection system and the flow of water.

Some preaction valves and deluge valves are not actuated by the operation of an automatic sprinkler, so a supplemental detection system is required to actuate the valves. This detection system indicates conditions of fire prior to waterflow in the system. The detection system can also be used to initiate other fire-related activities.

16.11.3.3.1 Deluge and preaction systems activated by pilot sprinklers shall not require an independent detection system alarm.

16.11.3.4* Paddle-Type Waterflow Devices. Paddle-type waterflow alarm indicators shall be installed in wet systems only.

A.16.11.3.4 The surge of water that occurs when the valve trips can seriously damage the device. Paddle-type waterflow devices are also permitted to be installed on wet systems that supply auxiliary dry pipe and/or preaction systems.

Exhibit 16.32 shows a paddle-type waterflow switch as it appears before installation. Exhibit 16.33 illustrates the operation of a paddle-type waterflow switch. In a wet system the moving water pushes the paddle causing an electric contact to close, indicating water flow. In a dry system, there is a significant potential for the inrush of water to knock off the paddle. This could not only eliminate the detection of water flow, it could also create an obstruction in piping downstream of the waterflow switch.

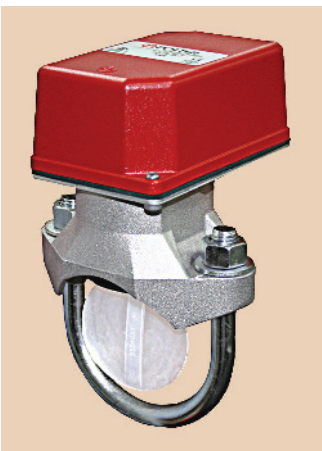

EXHIBIT 16.32 Paddle-Type Waterflow Switch Assembly. (Courtesy of Potter Electric Signal Company)

16.11.4 Retarding Devices. On each alarm check valve used under conditions of variable water pressure, a retarding device shall be installed.

Retarding devices are covered in 16.11.4. Retarding chambers (see Exhibit 16.34) are required where alarm devices connected to alarm valves would otherwise be subject to nuisance operation caused by surges from variable pressure supplies, such as city water or fire pumps. Where the supply is a constant pressure source, such as a gravity tank or pressure tank, retarding chambers might not be necessary.

EDUFIRE.IR

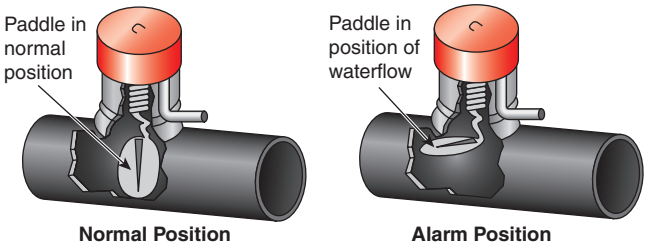

EXHIBIT 16.33 Paddle-Type Waterflow Switch in Two Positions: (left) Normal Position and (right) Alarm Position.

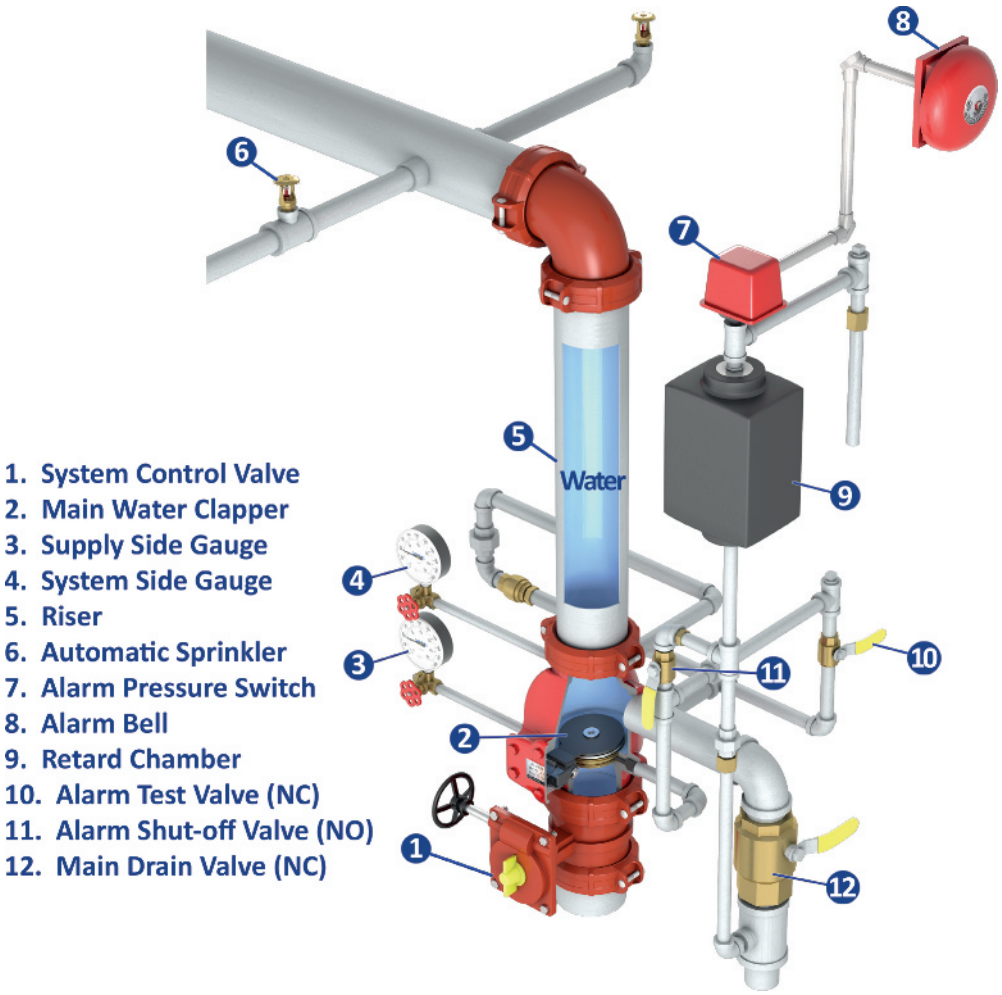

EXHIBIT 16.34 Wet Alarm Valve with Alarm Shutoff Valve. (Courtesy of Viking Group, Inc.)

16.11.5 Alarm Bypass Test Connections.

16.11.5.1 Alarm, dry pipe, preaction, and deluge valves shall be fitted with an alarm bypass test connection for an electric alarm switch, water motor gong, or both.

16.11.5.2 The alarm bypass test connection for alarm, dry pipe, preaction, and deluge valves shall be made on the water supply side of the system and provided with a control valve and drain for the alarm piping.

EDUFIRE.IR

The required bypass from the water side of the system allows alarm bypass tests to be conducted without tripping a dry, preaction, or deluge system.

16.11.5.3 The alarm bypass test connection for alarm valves at the riser shall be permitted to be made on the system side of an alarm valve.

16.11.5.4 A check valve shall be installed between the intermediate chamber of a dry pipe valve and the waterflow alarm device so as to prevent flow from the alarm bypass test connection from entering the intermediate chamber of a dry pipe valve during an alarm test via the alarm bypass test connection.

The alarm bypass on dry systems must be properly arranged to prevent tripping of the system, which could cause the system to freeze. A check valve is required between the bypass and the intermediate chamber of a differential dry valve to prevent the pressure in the alarm line from eliminating the differential on the dry valve clapper, causing the valve to trip.

16.11.6 Indicating Control Valves.

16.11.6.1 Where a control valve is installed in the connection to pressure-type contactors or water motor-operated alarm devices, it shall be of the indicating type.

16.11.6.2 Such valves shall be sealed, locked, or electrically supervised in the open position.

Historically, a control valve has been required between the connection of pressure-type contactors or motor-operated devices, the main purpose of which is to provide the capability of silencing the alarm. When a valve is provided, it must be of an indicating type and be sealed, locked, or electrically supervised to minimize potential alarm impairment. Exhibit 16.34 shows an alarm check valve with both a pressure switch and a motor-operated device with a retarding chamber, along with the control valve.

16.11.7* Attachments — Electrically Operated.

A.16.11.7 Switches that will silence electric alarm-sounding devices by interruption of electric current are not desirable; however, if such means are provided, then the electric alarm-sounding device circuit should be arranged so that, when the sounding device is electrically silenced, that fact should be indicated by means of a conspicuous light located in the vicinity of the riser or alarm control panel. This light should remain in operation during the entire period of the electric circuit interruption.

16.11.7.1 Electrically operated alarm attachments forming part of an auxiliary, central station, local protective, proprietary, or remote station signaling system shall be installed in accordance with *NFPA 72*.

16.11.7.2 Sprinkler waterflow alarm systems that are not part of a required protective signaling system shall not be required to be supervised and shall be installed in accordance with *NFPA 70*, Article 760.

16.11.7.3 Outdoor electric alarm devices shall be listed for outdoor use.

16.11.8* Attachments — Mechanically Operated.

A.16.11.8 Water motor-operated devices should be located as near as practicable to the alarm valve, dry pipe valve, or other waterflow detection device. The total length of the pipe to these devices should not exceed 75 ft (23 m), nor should the water motor-operated device be located over 20 ft (6.1 m) above the alarm device or dry pipe valve.

16.11.8.1 For all types of sprinkler systems employing water motor-operated alarms, a listed ¾ in. (20 mm) strainer shall be installed at the alarm outlet of the waterflow detecting device.

EDUFIRE.IR

16.11.8.2 Where a retarding chamber is used in connection with an alarm valve, the strainer shall be located at the outlet of the retarding chamber unless the retarding chamber is provided with an approved integral strainer in its outlet.

See the commentary following 16.11.1.3. The strainer and the pipe of corrosion-resistant material are required to protect against obstruction of the small orifice through which water enters the water motor.

16.11.9 Alarm Device Drains. Drains from alarm devices shall be arranged so that there will be no overflowing at the alarm apparatus, at domestic connections, or elsewhere with the sprinkler drains wide open and under system pressure. *(See 16.10.6.)*

16.11.10* Alarm Attachments — High-Rise Buildings. When a fire must be fought internally due to the height of a building, the following additional alarm apparatus shall be provided:

(1) Each sprinkler system on each floor shall be equipped with a separate waterflow device. The waterflow device shall be connected to an alarm system in such a manner that operation of one sprinkler will actuate the alarm system, and the location of the operated flow device shall be indicated on an annunciator and/or register. The annunciator or register shall be located at grade level at the normal point of fire department access, at a constantly attended building security control center, or at both locations.
(2) Where the location within the protected buildings where supervisory or alarm signals are received is not under constant supervision by qualified personnel in the employ of the owner, a connection shall be provided to transmit a signal to a remote central station.
(3) A distinct trouble signal shall be provided to indicate a condition that will impair the satisfactory operation of the sprinkler system.

A.16.11.10 Monitoring should include but not be limited to control valves, building temperatures, fire pump power supplies and running conditions, and water tank levels and temperatures. Pressure supervision should also be provided on pressure tanks.

Check valves can be required to prevent false waterflow signals on floors where sprinklers have not activated — for example, floor systems interconnected to two supply risers.

To improve the reliability of an automatic sprinkler system in a high-rise building, supervision of any portion of the system that could impair its operation is required. A sprinkler waterflow alarm annunciated by floor is not required, because some systems can take on configurations that would not lend themselves to this type of zoning. On the other hand, where sprinkler waterflow alarms are provided on each floor, they are intended to be annunciated at a point to allow rapid identification of the fire location by the fire department on arrival.

The overall reliability of the system is further improved by requiring remote monitoring of supervisory signals in the numerous cases where 24-hour surveillance of on-site supervisory equipment is not provided.

16.12* Fire Department Connections.

A.16.12 The fire department connection should be located not less than 18 in. (500 mm) and not more than 4 ft (1.2 m) above the level of the adjacent grade or access level. Typical fire department connections are shown in Figure A.16.12. See NFPA 13E.

16.12.1* Unless the requirements of 16.12.2 are met, a fire department connection shall be provided as described in Section 16.12 in accordance with Figure 16.12.1.

EDUFIRE.IR

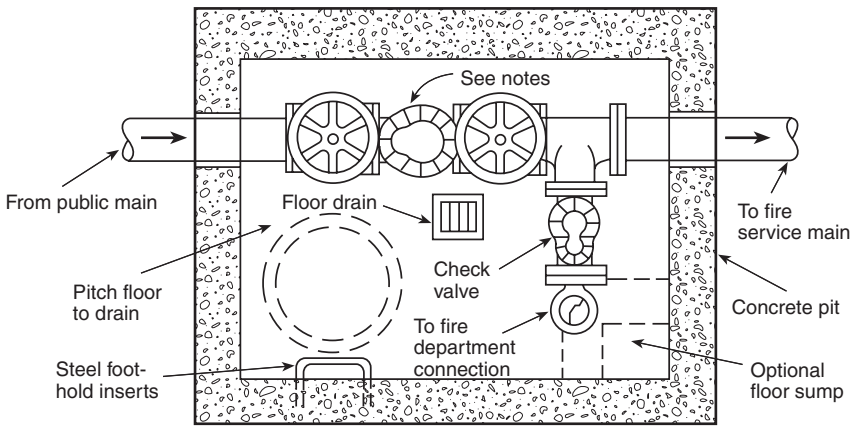

Plan (no scale)

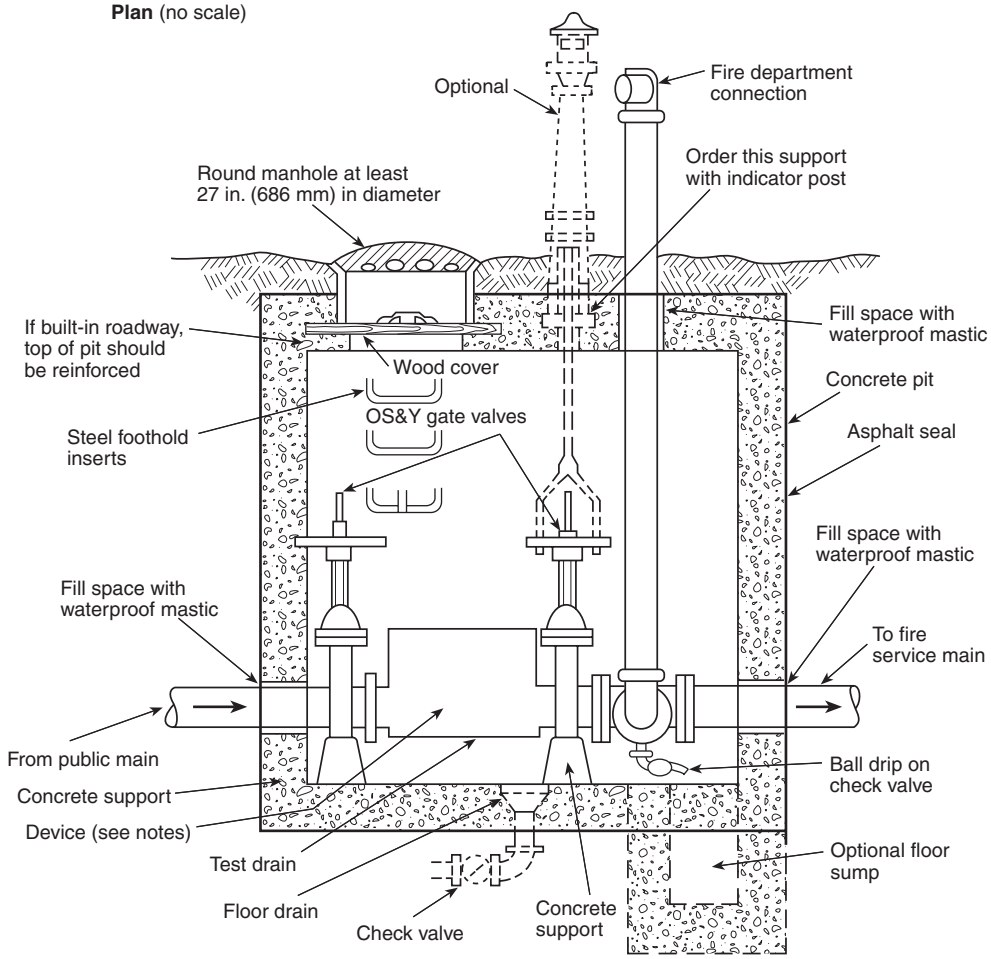

Section (no scale)

Notes:

1. Various backflow prevention regulations accept different devices at the connection between public water mains and private fire service mains.
2. The device shown in the pit could be any or a combination of the following:
   (a) Gravity check valve
   (b) Detector check valve
   (c) Double check valve assembly
   (d) Reduced pressure zone (RPZ) device
   (e) Vacuum breaker
3. Some backflow prevention regulations prohibit these devices from being installed in a pit.
4. In all cases, the device(s) in the pit should be approved or listed as necessary. The requirements of the local or municipal water department should be reviewed prior to design or installation of the connection.
5. Pressure drop should be considered prior to the installation of any backflow prevention devices.

FIGURE A.16.12 *Typical City Water Pit — Valve Arrangement.*

EDUFIRE.IR

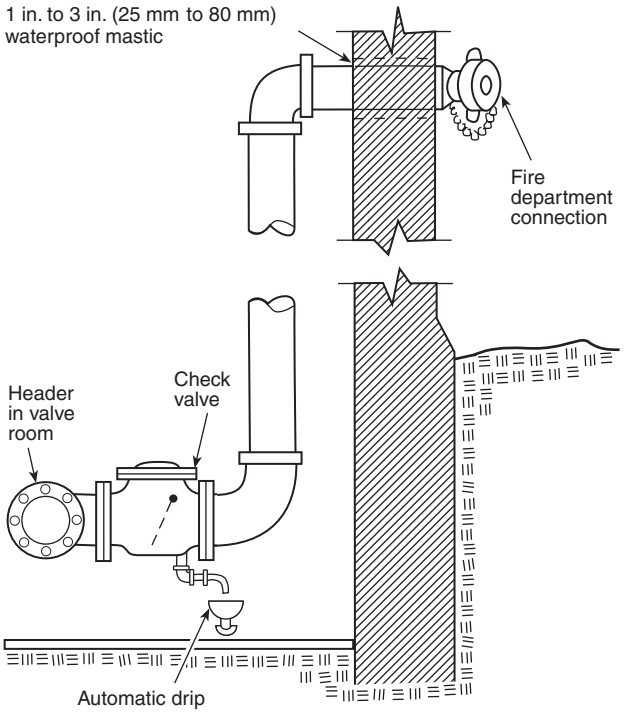

FIGURE 16.12.1 *Fire Department Connection.*

A.16.12.1 Fire department connections should be located and arranged so that hose lines can be readily and conveniently attached without interference from nearby objects, including buildings, fences, posts, or other fire department connections. Where a hydrant is not available, other water supply sources such as a natural body of water, a tank, or a reservoir should be utilized. The water authority should be consulted when a nonpotable water supply is proposed as a suction source for the fire department.

16.12.2 The following systems shall not require a fire department connection:

(1) Buildings located in remote areas that are inaccessible for fire department support
(2) Large-capacity deluge systems exceeding the pumping capacity of the fire department
(3) Single-story buildings not exceeding 2000 ft^2 (185 m^2) in area

16.12.3 Fire Department Connection Types.

16.12.3.1* Unless the requirements of 16.12.3.1.1, 16.12.3.1.2, or 16.12.3.1.3 are met, the fire department connection(s) shall consist of two 2½ in. (65 mm) connections using NH internal threaded swivel fitting(s) with "2.5–7.5 NH standard thread," as specified in NFPA 1963.

A.16.12.3.1 The purpose of the fire department connection is to supplement the water supply but not necessarily provide the entire sprinkler system demand. Fire department connections are not intended to deliver a specific volume of water.

16.12.3.1.1 Where local fire department connections do not conform to NFPA 1963, the authority having jurisdiction shall be permitted to designate the connection to be used.

16.12.3.1.2 The use of threadless couplings shall be permitted where required by the authority having jurisdiction and where listed for such use.

16.12.3.1.3 A single-outlet fire department connection shall be acceptable where piped to a 3 in. (80 mm) or smaller riser.

EDUFIRE.IR

16.12.3.2 Fire department connections shall be equipped with approved plugs or caps, properly secured and arranged for easy removal by fire departments.

16.12.3.3 Fire department connections shall be of an approved type.

16.12.4* Size. The size of the pipe for the fire department connection shall be in accordance with one of the following:

(1) Pipe size shall be a minimum of 4 in. (100 mm) for fire engine connections.
(2) Pipe size shall be a minimum of 6 in. (150 mm) for fire boat connections.
(3) For hydraulically calculated systems, the pipe size shall be permitted to be less than 4 in. (100 mm), but not less than the largest riser being served by that connection.

A.16.12.4 The purpose of a fire department connection is to supplement the pressure to an automatic fire sprinkler system. It is not the intent to size the fire department connection piping based on system demand. For multiple system risers supplied by a manifold, the fire department connection need not be larger than that for an individual system.

16.12.5* Arrangement. The fire department connection shall be arranged in accordance with Figure 16.12.1.

A.16.12.5 The check valve should be located to maximize accessibility and minimize freezing potential. It is recommended that the check valve be located to reduce the length of nonpressurized pipe in the fire department connection supply line.

Arrangement of fire department connections is addressed in 16.12.5. Each separate water supply connection for sprinkler systems, whether automatic or manual, should be made on the system side of a check valve. Only in this way can pressure differentials between municipal, fire pump, pressure tank, or fire department connections effectively supply the sprinklers. The highest pressure supply comes in first, until its capacity is reached. As capacity is exceeded, the pressure drops until the next highest pressure supply comes in. The check valve prevents the higher pressure supply from backing up or circulating into lower pressure supplies. See 16.9.5.2 and its associated commentary.

Sprinklers shown in Exhibit 16.35 and Exhibit 16.36 normally are supplied by a public main with a static pressure of 50 psi (3.4 bar). On arrival at a fire in this building, the fire officer would order a pumper to connect to the hydrant across the street and pump at 150 psi (10.3 bar) into the yard fire department

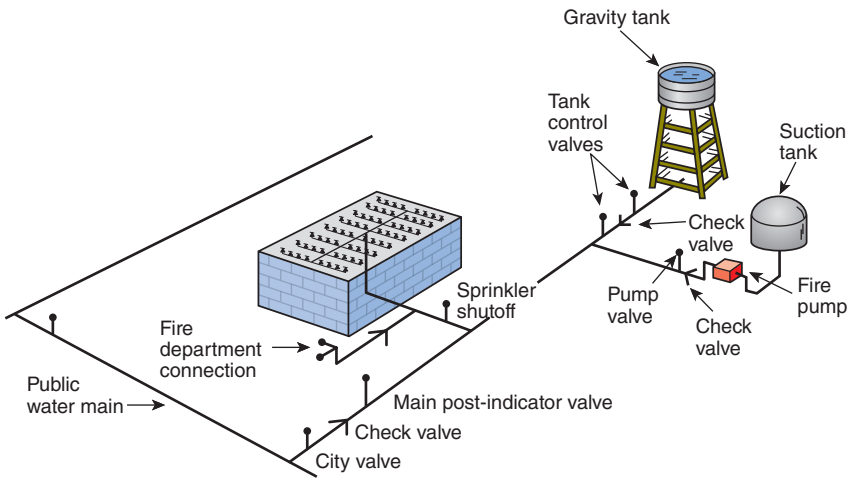

EXHIBIT 16.35 Alternative Water Supplies to Sprinkler System.

EDUFIRE.IR

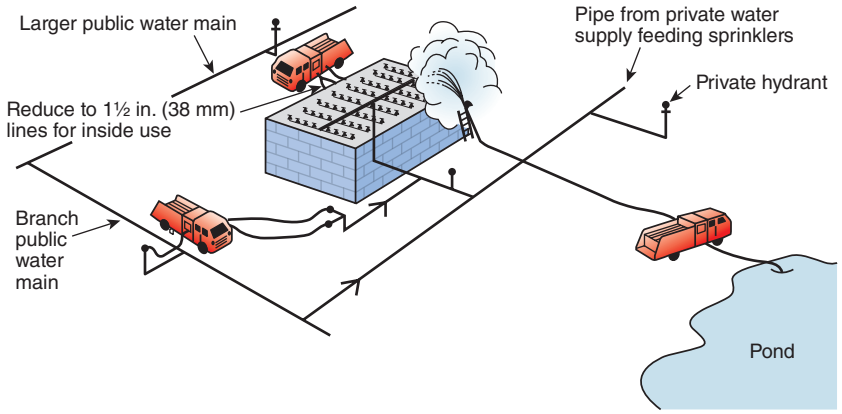

EXHIBIT 16.36 Fire Department Water Supply Connections to Sprinkler System.

connection, adding supplementary pressure to the sprinkler system. If the connection were not on the system side of a check valve, the pumped water would circulate back into the same main to the suction side of the pumper, and no supplementary pressure could be added.

16.12.5.1* The fire department connection shall be on the system side of the water supply check valve.

A.16.12.5.1 The fire department connection should be connected to the system riser. For single systems, it is an acceptable arrangement to attach the fire department connection to any point in the system, provided the pipe size meets the requirements of 16.12.4.

16.12.5.1.1 The fire department connection shall not be attached to branch line piping.

16.12.5.1.2 The fire department connection shall be located not less than 18 in. (450 mm) and not more than 4 ft (1.2 m) above the level of the adjacent grade or access level.

16.12.5.2 For single systems, the fire department connection shall be installed as follows:

(1) Wet system — on the system side of system control, check, and alarm valves *(see Figure A.16.9.3)*
(2) Dry system — between the system control valve and the dry pipe valve
(3) Preaction system — between the preaction valve and the check valve on the system side of the preaction valve
(4) Deluge system — on the system side of the deluge valve

N **16.12.5.3** The fire department connection shall be permitted to be connected to the main piping on the wet pipe or deluge system it serves.

16.12.5.4 For multiple systems, the fire department connection shall be connected between the supply control valves and the system control valves.

An arrangement of multiple check valves introduces multiple failure points and increased maintenance requirements. Because NFPA 13 allows for unlimited numbers of zone valves, there is always a chance that a portion of the system cannot be supplied through the fire department connection because of a shut valve. There are no provisions in the standard that prohibit the installation of zone valves downstream of the fire department connections, even for single wet systems where the fire department connection is tapped immediately downstream of the system alarm check valve.

FAQ [16.12.5.2]

For a wet pipe sprinkler system, can the fire department connection be connected only to the system riser?

The proper arrangement for a fire department connection on a wet pipe system can be found in 16.12.5.2(1). This arrangement is standard. Note that, for wet pipe systems, the fire department connection can be connected to any portion of a feed or cross main, not just at the system riser, if using another location makes more sense. However, the fire department connection cannot be connected to branch line piping.

EDUFIRE.IR

ASK THE AHJ

Why would the fire department want the fire department connection tap upstream of the system control valves when a shut valve would prevent the fire department from supplying the system during a water supply failure?

It is recognized that it would be advantageous to have fire department connections tapped downstream of each system control valve. However, such an arrangement would need to have multiple fire department connections or a complex arrangement involving multiple check valves. It is considered far riskier to have multiple fire department connections because the fire department would need to figure out which connection serves which area of the building, and the possibility exists of the non-fire area system getting pumped.

16.12.5.5* The requirements of 16.12.5.2 and 16.12.5.4 shall not apply where the fire department connection is connected to the underground piping.

A.16.12.5.5 Figure A.16.12.5.5(a) and Figure A.16.12.5.5(b) depict fire department connections to the underground pipe.

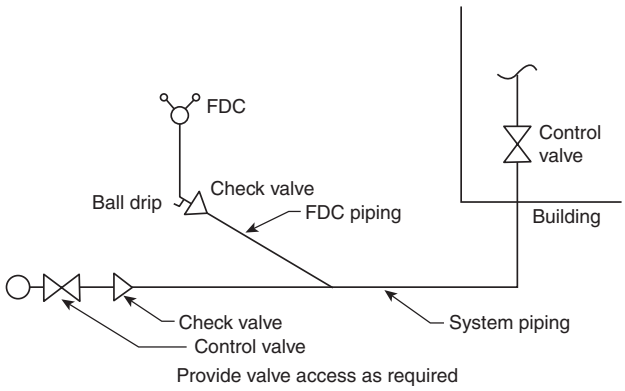

FIGURE A.16.12.5.5(a) *Fire Department Connection to Underground Piping for a Single System.*

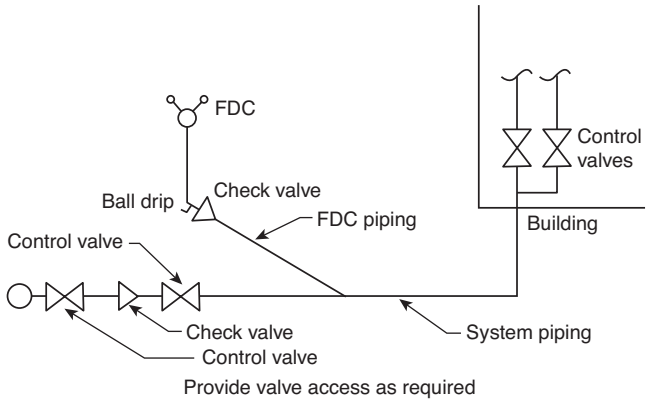

FIGURE A.16.12.5.5(b) *Fire Department Connection to Underground Piping for Multiple Systems.*

16.12.5.6 Where a fire department connection services only a portion of a building, a sign shall be attached indicating the portions of the building served.

Confusion can occur where there are multiple fire department connections or where the fire department connection serves only a portion of a building. If the fire department cannot determine which fire department connection to use, the proper connection — or any other connection — might not be used. On other occasions, the fire department might pump into a fire department connection that does not serve the fire area. To avoid those types of problems, NFPA 13 requires that where multiple systems exist the fire department connection serve all the sprinkler systems (see 16.12.5.4) and that connections that serve only a portion of the building be marked with the area they serve.

16.12.5.7* Fire department connections shall be located at the nearest point of fire department apparatus accessibility or at a location approved by the authority having jurisdiction.

Fire department connections need to be accessible and located where the fire department can use them. Paragraph 16.12.5.7 no longer requires the connection to be on the street side of buildings but in a location approved by the local fire department.

A.16.12.5.7 Obstructions to fire department connections include but are not limited to buildings, fences, posts, shrubbery, other fire department connections, gas meters, and electrical equipment.

EDUFIRE.IR

The fire department connection should not be in the direct vicinity of gas meters or electrical equipment because of the potential hazards they present during fire ground operations. In addition, landscaping plans should be reviewed to avoid potential obstructions around the fire department connection.

16.12.5.8 Signs.

16.12.5.8.1 Each fire department connection to sprinkler systems shall be designated by a sign having raised or engraved letters at least 1 in. (25 mm) in height on plate or fitting reading service design — for example, AUTOSPKR., OPEN SPKR., AND STANDPIPE.

16.12.5.8.2 A sign shall also indicate the pressure required at the inlets to deliver the greatest system demand.

16.12.5.8.3 The sign required in 16.12.5.8.2 shall not be required where the system demand pressure is less than 150 psi (10.3 bar).

16.12.5.9 Fire department connections shall not be connected on the suction side of fire pumps.

According to 16.12.5.1 through 16.12.5.5, the fire department connection is made on the system side of the check valve. For installation on systems with fire pumps, the fire department connection needs to be made on the sprinkler system side of the discharge check valve for the fire pump. Full efficiency and reliability cannot be obtained for a suction-side connection because of losses through the pump and valves and because of the inability to supplement the system if the discharge-side control valves are closed. Pumping into the suction side of a fire pump increases the discharge pressure of the pump, frequently beyond the pressure limits of the system. The fire department connection should be made on the system side of a pump and on the system side — that is, the discharge side — of the pump's discharge check valve and control valves.

The information provided on the sign at the fire department connection, as addressed in 16.12.5.8.1 through 16.12.5.8.3, is directed at the engineer on the fire department pumper. Since fire department procedures normally require the pump operator to provide 150 psi (10.3 bar) at the connection, the sign is required to indicate that some pressure beyond 150 psi (10.3 bar) is necessary. (See 4.3.4 of NFPA 13E, *Recommended Practice for Fire Department Operations in Properties Protected by Sprinkler and Standpipe Systems.*)

16.12.5.10 Fire department connections shall be properly supported.

16.12.6 Valves.

16.12.6.1 A listed check valve shall be installed in each fire department connection and shall be located in an accessible location.

16.12.6.2 There shall be no shutoff valve in the fire department connection piping.

The installation of a shutoff valve on both sides of a check valve to facilitate repair is usually considered good practice. The check valve in the fire department connection is considered to be an exception, and no shutoff valve is permitted by 16.12.6.2 at that point in the fire department connection. Control valves in a fire department connection serve no purpose other than to provide a point of potential system failure.

16.12.7* Drainage. The piping between the check valve and the outside hose coupling shall be equipped with an approved automatic drain valve in areas subject to freezing.

In the event that the check valve in the fire department connection leaks, the purpose of the automatic drain (ball drip) is to drain this water to a safe location and to maintain the piping between the check valve and the hose couplings free of water. Without the automatic drain, collected water could freeze and prevent the fire department from pumping into the system under fire conditions. This automatic drain also facilitates maintenance of the fire department connection piping, because this portion of the pipe is already free of water. The drain should be located at the lowest point of the fire department connection piping to allow complete drainage.

EDUFIRE.IR

A.16.12.7 In cases where water in the piping between the system side and the fire department connection check valve would be trapped, an auxiliary drain is required.

16.12.7.1 The automatic drain valve shall be installed in a location that permits inspection and testing as required by NFPA 25.

16.13 Gauges.

16.13.1 A pressure gauge with a connection not smaller than ¼ in. (6 mm) shall be installed at the system main drain, at each main drain associated with a floor control valve, and on the inlet and outlet side of each pressure-reducing valve.

16.13.2 Each gauge connection shall be equipped with a shutoff valve and provisions for draining.

16.13.3 The required pressure gauges shall be approved and shall have a maximum limit not less than twice the normal system working pressure at the point where installed.

16.13.4 Gauges shall be installed to permit removal and shall be located where they will not be subject to freezing.

16.14 System Connections.

Subsection 16.10.4 should be referenced to determine the relation between the test connections noted in Section 16.14 and the drain sizes previously discussed. A single drain normally serves both functions.

16.14.1* Wet Pipe Systems.

A.16.14.1 The purpose of this alarm test connection is to make sure the alarm device is sensitive enough to determine the flow from a single sprinkler and sound an alarm. The purpose of this test connection is not to ensure that water will flow through the entire system. When this test connection is installed on the upper story, and at the end of the most remote branch line, the user is able to tell that there is water flowing in one path through the system, but there is no assurance that water will flow to other branch lines. Putting the test connection at the most remote portion of the system causes the introduction of fresh oxygen into a large part of the system each time the alarm is tested and increases the corrosion that will occur in the piping. The discharge should be at a point where it can be readily observed. In locations where it is not practical to terminate the test connection outside the building, the test connection is permitted to terminate into a drain capable of accepting full flow under system pressure. In this event, the test connection should be made using an approved sight test connection containing a smooth bore corrosion-resistant orifice giving a flow equivalent to one sprinkler simulating the least flow from an individual sprinkler in the system. *[See Figure A.16.14.1(a) and Figure A.16.14.1(b).]* The test valve should be located at an accessible point and preferably not over 7 ft (2.1 m) above the floor. The control valve on the test connection should be located at a point not exposed to freezing.

FAQ [16.14.1.4]

For a wet pipe sprinkler system, is the inspector's test connection required to be at the end of the most remote branch line?

Ideally the inspector's test connection is located at the end of the most remote branch line in the upper story. Such a location is not, however, required.

16.14.1.1 An alarm test connection not less than 1 in. (25 mm) in diameter, terminating in a smooth bore corrosion-resistant orifice, giving a flow equal to or less than one sprinkler of a type having the smallest K-factor installed on the particular system, shall be provided to test each waterflow alarm device for each system.

EDUFIRE.IR

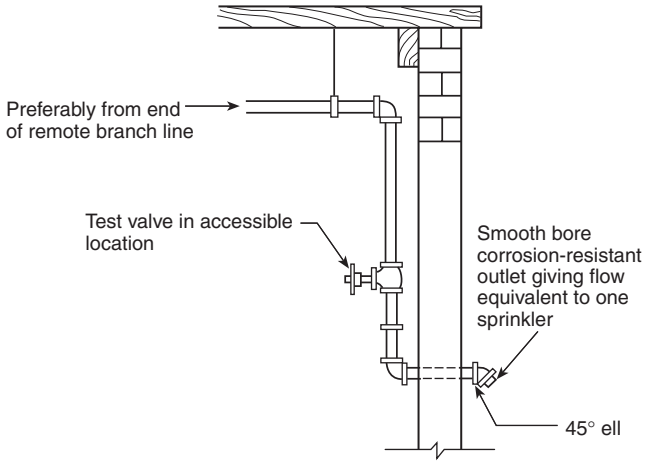

Elevation

Note: Not less than 4 ft (1.2 m) of exposed test pipe in warm room beyond valve where pipe extends through wall to outside.

FIGURE A.16.14.1(a) *System Test Connection on Wet Pipe System.*

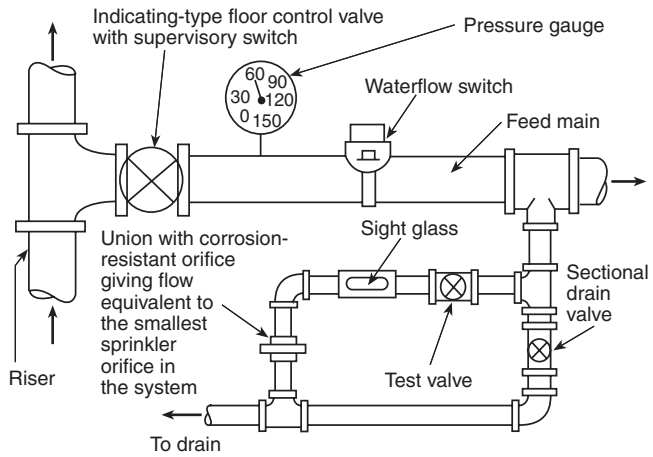

FIGURE A.16.14.1(b) *Zone Control Station System Test Connection on Wet Pipe System.*

16.14.1.2 The test connection valve shall be accessible.

16.14.1.3 The discharge shall be to the outside, to a drain connection capable of accepting full flow under system pressure, or to another location where water damage will not result.

16.14.1.4 The alarm test connection shall be permitted to be installed in any location on the fire sprinkler system downstream of the waterflow alarm.

For a wet pipe system, the exclusive purpose of the inspector's test is to verify operation of the alarm attachment, which is the reason that the test connection is not mandated at the remote portion of the system. The test connection is only required to be located downstream of the alarm device. Exhibit 16.37 shows a test connection located in the fire pump room near the sprinkler system alarm valve.

EXHIBIT 16.37 *Inspector's Test Connection for Wet Pipe System. (Courtesy United Association Sprinkler Fitter Local 268 Training Center)*

16.14.2* Dry Pipe Systems.

A.16.14.2 See Figure A.16.14.2 and Figure A.8.2.3.7.

16.14.2.1 A trip test connection or manifold not less than 1 in. (25 mm) in diameter, terminating in a smooth bore corrosion-resistant orifice, to provide a flow equivalent to one sprinkler of a type installed on the particular system, shall be installed.

16.14.2.2 The trip test connection or manifold shall be located on the end of the most distant sprinkler pipe in the upper story and shall be equipped with an accessible shutoff valve and a plug not less than 1 in. (25 mm), of which at least one shall be brass.

16.14.2.3 In lieu of a plug, a nipple and cap shall be acceptable.

16.14.2.4 When the capacity (volume) of the dry pipe system has been determined in accordance with 8.2.3.2, 8.2.3.3, 8.2.3.4, or 8.2.3.5, a trip test connection shall be permitted to provide a flow equivalent to one sprinkler in accordance with 16.14.2.1 through 16.14.2.3.

The dry pipe system inspector's test connection is used to measure the approximate time from the opening of the most distant sprinkler in the system until water flows from that sprinkler. For that reason, the test connection must be located at the end of the farthest line in the top story of the protected occupancy. The valve must be sealed with a plug or with a nipple and cap when not in use to avoid leakage of air and to avoid accidental tripping of the dry pipe valve.

EDUFIRE.IR

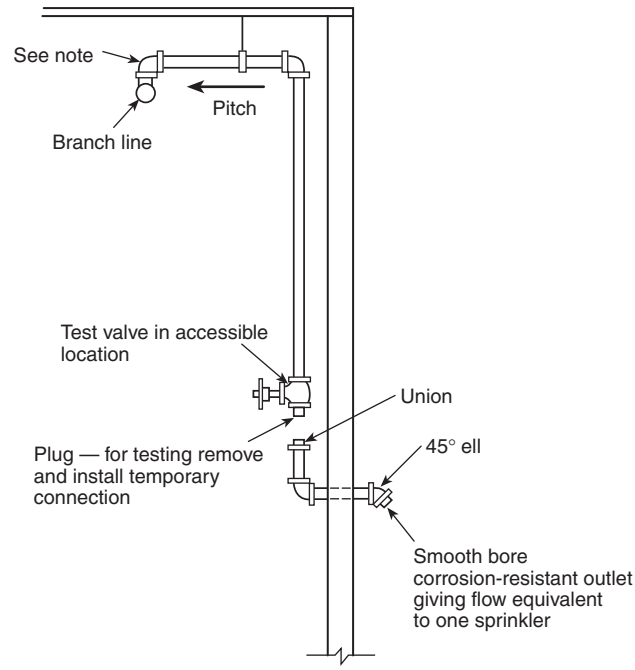

Note: To minimize condensation of water in the drop to the test connection, provide a nipple-up off of the branch line.

FIGURE A.16.14.2 *System Test Connection on Dry Pipe System.*

The installation of the test valve on the drop pipe is permitted for the purpose of accessibility. In this case, the connection should be made to the top of the branch line to minimize condensation buildup. Moisture should be drained periodically, as is done with low-point drains in areas subject to freezing. The manufacturer's instructions should be followed to avoid accidental operation of dry pipe valves equipped with quick-opening devices.

16.14.2.5 When the capacity (volume) of the dry pipe system has been determined in accordance with 8.2.3.7, the following shall apply:

(1) When flow is from four sprinklers, the trip test manifold shall be arranged to simulate two sprinklers on each of two sprinkler branch lines.
(2) When flow is from three sprinklers, the test manifold shall be arranged to simulate two sprinklers on the most remote branch line and one sprinkler on the next adjacent branch line.
(3) When flow is from two sprinklers, the test manifold shall be arranged to simulate two sprinklers on the most remote branch line.
(4) When flow is from one sprinkler, the test manifold shall be installed per the requirements for a trip test connection in accordance with 16.14.2.1 through 16.14.2.3.

16.14.3 Preaction Systems.

16.14.3.1 A test connection shall be provided on a preaction system using supervisory air.

16.14.3.2 The connection used to control the level of priming water shall be considered adequate to test the operation of the alarms monitoring the supervisory air pressure.

EDUFIRE.IR

16.14.3.3 For double interlock preaction systems, a trip test connection or manifold not less than 1 in. (25 mm) in diameter, terminating in a smooth bore corrosion-resistant orifice to provide a flow equivalent to one sprinkler of a type installed on the particular system, shall be installed.

16.14.3.4 For double interlock preaction systems, the trip test connection or manifold shall be located on the end of the most distant sprinkler pipe in the upper story and shall be equipped with an accessible shutoff valve and a plug not less than 1 in. (25 mm), of which at least one shall be brass.

16.14.3.5 In lieu of a plug, a nipple and cap shall be acceptable.

16.14.3.6 When the capacity (volume) of the double interlock preaction system has been determined in accordance with 8.3.2.3.1.1, 8.3.2.3.1.2, or 8.3.2.3.1.3, a trip test connection shall be permitted to provide a flow equivalent to one sprinkler in accordance with 16.14.3.3 through 16.14.3.5.

16.14.3.7 When the capacity (volume) of the double interlock preaction system has been determined in accordance with 8.3.2.3.1.4, the following shall apply:

(1) When flow is from four sprinklers, the trip test manifold shall be arranged to simulate two sprinklers on each of two sprinkler branch lines.
(2) When flow is from three sprinklers, the test manifold shall be arranged to simulate two sprinklers on the most remote branch line and one sprinkler on the next adjacent branch line.
(3) When flow is from two sprinklers, the test manifold shall be arranged to simulate two sprinklers on the most remote branch line.
(4) When flow is from one sprinkler, the test manifold shall be installed as per the requirements for a trip test connection in accordance with 16.14.3.3 through 16.14.3.5.

16.14.4 Deluge Systems. A test connection shall not be required on a deluge system.

16.14.5* Backflow Devices.

A.16.14.5 Where backflow prevention devices are installed, they should be in an accessible location to provide for service and maintenance.

16.14.5.1* Backflow Prevention Valves. Means shall be provided downstream of all backflow prevention valves for forward flow tests at a minimum flow rate of the system demand including hose allowance where applicable.

A.16.14.5.1 System demand refers to flow rate and pressure. This test is only concerned with testing at the proper flow rate.

The full flow test of the backflow prevention valve can be performed with a test header or other connection downstream of the valve. A bypass around the check valve in the fire department connector line with a control valve in the normally closed position can be an acceptable arrangement. When flow to a visible drain cannot be accomplished, closed loop flow can be acceptable if a flowmeter or site glass is incorporated into the system to ensure flow. When a backflow prevention device is retroactively installed on a pipe schedule system, the revised hydraulic calculation still follows the pipe schedule method of 19.3.2 with the inclusion of friction loss for the device.

N **16.14.5.1.1** The arrangement required in 16.14.5.1 shall be serviceable without requiring the owner to modify the system to perform the test.

EDUFIRE.IR

DESIGNER'S CORNER [16.14.5.1]

Is a main drain connection sufficient "means" for conducting the flow test at system demand required by 16.14.5.1?

This type of connection generally is not sufficient for conducting the flow test because main drains have not been sized to accommodate system flow. Backflow preventers have internally loaded springs that are constantly pushing the valves into the closed position. If the springs are not periodically exercised, they might not permit the valve to fully open when there is a fire, impairing the sprinkler system. To prevent that from happening, NFPA 25 requires periodic forward flow tests of the backflow devices at the system demand flow. To ensure that the tests can happen, NFPA 13 requires the installation of a mechanism downstream of the backflow device that will allow the system demand to flow through the mechanism when it is opened.

Prior to the 2016 edition of NFPA 13, the largest main drain size was limited to 2 in. (50 mm), which allowed systems to be drained in a reasonable time period and conserved water during main drain tests. In the 2016 edition, the size of the main drain was permitted to be increased, but using large main drains to conduct forward flow tests of backflow preventers might still be a concern.

To create a flow at least as large as the system demand, an opening needs to be created with roughly the same cross-sectional area as the system riser. Doing so ensures that the system demand has been created when the mechanism is fully open without having to take any pressure or flow readings. On systems with a 2 in. (50 mm) main drain, the cross-sectional area of the drain opening typically is insufficient to achieve the system demand flow.

Using a main drain that is larger than 2 in. (50 mm), the size of the system riser creates two potential problems. The first is that main drains are generally on the inside of a building, and providing sufficient drainage to deal with the discharge from the fully opened drain is a challenge. With 2 in. (50 mm) drains, sprinkler contractors frequently do not deal with the drainage situation correctly, and the drain cannot be opened fully. Using a larger drain might only exacerbate the issue.

The second problem is the main drain test itself, which requires the drain to be fully opened four times annually. With a large drain, water is wasted when the drain is fully opened. It might be tempting to not open the drain fully for the test, which makes comparison of the test results impossible to correlate.

A better solution would be a means to test the full flow of the backflow device that is separate from the main drain that allows for proper drainage.

A 2 in. (50 mm) Main Drain.

Backflow Device.

EDUFIRE.IR

16.15 Hose Connections.

16.15.1 Small [1½ in. (40 mm)] Hose Connections. See Section C.5.

C.5 [16.15.1 and 20.11.1] In most tests conducted, it was necessary to use small hose for mop-up operations. Small hose was not used in the high-expansion foam test.

Test 97 was conducted to evaluate the effect of dry pipe sprinkler operation. Test results were approximately the same as the base test with a wet pipe system. A study of NFPA records, however, indicates an increase in area of operation of 30 percent to be in order for dry pipe systems as compared with wet pipe systems.

16.15.1.1* Where required, small [1½ in. (40 mm)] hose connections shall be installed.

Storage fires normally require the use of hose lines for complete extinguishment of fires within boxes or other areas that can be shielded from the sprinklers at the ceiling. Fire departments normally use their own hose. When specifically required, the hose connections can be supplied from separate or adjacent systems or outside hydrants, so that the ceiling sprinklers can be shut off during the cleanup operation. In accordance with NFPA 14, *Standard for the Installation of Standpipe and Hose Systems*, these hose connections are not intended to serve as standpipes.

A.16.15.1.1 One and one-half inch (40 mm) fire hose packs are not required unless designated by the authority having jurisdiction, as it is not likely that such hoses will be adequately maintained for safe use by first responders. Civilian workers who are not properly trained in fire-fighting techniques are expected to evacuate the building in the event of a fire.

Hose connections of 1½ in. (40 mm) are restricted to wet pipe systems (see 16.15.1.4). The maintenance problems due to loss of air pressure through the hose valves in other types of systems would outweigh their value. These types of connections are convenience connections for first-aid fire-fighting conditions. These connections are not standpipe connections. Thus, the flows noted in NFPA 20, *Standard for the Installation of Stationary Pumps for Fire Protection*, for hose connections are all that needs to be accounted for in this type of connection.

Hose connections of 1½ in. (40 mm) supplied from sprinkler systems have been successful in fire extinguishment and fire control for many years. The requirements for Class II standpipe systems in NFPA 14 do not apply to hose connections attached to sprinkler systems.

The pressure at the outlet is restricted to 100 psi (6.9 bar), due to the danger posed to an operator using a hose subject to high pressure. Where the static pressure is less than 175 psi (12.1 bar), only the flowing pressure at the outlet must be controlled because the pressure will drop quickly once the hose valve is opened. When the static pressure exceeds 175 psi (12.1 bar), the pressure in either static or under flow conditions is limited and the maximum allowable pressure at the hose outlet under both conditions is 100 psi (6.9 bar).

ASK THE AHJ

Can the authority having jurisdiction waive the requirement for small hose lines?

NFPA 13 does not require small hose lines but rather provides installation requirements for circumstances where small hose lines are required by the authority having jurisdiction.

Many jurisdictions waive the requirement for the hose and nozzle, but they do not waive the requirement for actual hose connections. Such connections are often useful for fire departments because they complete extinguishment of the fire the sprinkler system knocked down and during overhaul activities (not major fire attack operations). If connections were available, the fire department would not need to stretch hose lines all the way from the apparatus parked outside the building. The fire department personnel could bring their high-rise packs (with hose, nozzles, and adapter) with them into the building. Not requiring the hose and nozzle to be present removes the concern that the fire department personnel might try to operate hose lines that have not been properly maintained. Not requiring the hose and nozzle to be present also removes the concern of the owner or tenant with regard to any Occupational Safety and Health Administration (OSHA) training requirements for employees.

EDUFIRE.IR

16.15.1.1.1 Valves shall be available to reach all portions of the area with 100 ft (30 m) of hose plus 30 ft (9.1 m) of hose stream distance.

16.15.1.1.2 Where the building is protected throughout by an approved automatic sprinkler system, the presence of 1½ in. (40 mm) hose lines for use by the building occupants shall not be required, subject to the approval of the authority having jurisdiction.

16.15.1.1.3 Where approved by the authority having jurisdiction, the location of valves shall be permitted to exceed the distances specified in 16.15.1.1.1.

16.15.1.2 The hose connections shall not be required to meet the requirements of Class II hose systems defined by NFPA 14.

16.15.1.3 Hose connections shall be supplied from one of the following:

(1) Outside hydrants
(2) Separate piping system for small hose connections
(3) Valved hose connections on sprinkler risers where such connections are made upstream of all sprinkler control valves
(4) Adjacent sprinkler systems
(5) In rack storage areas, the ceiling sprinkler system in the same area (as long as in-rack sprinklers are provided in the same area and are separately controlled)
(6) In nonstorage occupancies that are not a part of a standpipe system, ceiling sprinkler piping in the same area as the hose connection

16.15.1.4* Hose connections used for fire purposes only shall be permitted to be connected to wet pipe sprinkler systems only, subject to the following restrictions:

(1) Hose connection's supply pipes shall not be connected to any pipe smaller than 2½ in. (65 mm) in diameter.
(2) The requirements of 16.15.1.4(1) shall not apply to hydraulically designed loops and grids, where the minimum size pipe between the hose connection's supply pipe and the source shall be permitted to be 2 in. (50 mm).
(3) For piping serving a single hose connection, pipe shall be a minimum of 1 in. (25 mm) for horizontal runs up to 20 ft (6.1 m), a minimum of 1¼ in. (32 mm) for the entire run for runs between 20 ft and 80 ft (6.1 m and 24 m), and a minimum of 1½ in. (40 mm) for the entire run for runs greater than 80 ft (24 m). For piping serving multiple hose connections, runs shall be a minimum of 1½ in. (40 mm) throughout.
(4) Piping shall be at least 1 in. (25 mm) for vertical runs.
(5) Where the residual pressure at a 1½ in. (40 mm) outlet on a hose connection exceeds 100 psi (7 bar), an approved pressure-regulating device shall be provided to limit the residual pressure at the outlet to 100 psi (7 bar).
(6) Where the static pressure at a 1½ in. (40 mm) hose connection exceeds 175 psi (12 bar), an approved pressure-regulating device shall be provided to limit static and residual pressures at the outlet to 100 psi (7 bar).

A.16.15.1.4 This standard covers 1½ in. (40 mm) hose connections for use in storage occupancies and other locations where standpipe systems are not required. Where Class II standpipe systems are required, see the appropriate provisions of NFPA 14 with respect to hose stations and water supply for hose connections from sprinkler systems.

16.15.2 Hose Connections for Fire Department Use.

16.15.2.1 In buildings of light or ordinary hazard occupancy, 2½ in. (65 mm) hose valves for fire department use shall be permitted to be attached to wet pipe sprinkler system risers.

EDUFIRE.IR

16.15.2.2* The following restrictions shall apply:

(1) Each connection from a standpipe that is part of a combined system to a sprinkler system shall have an individual control valve and check valve of the same size as the connection.
(2) The minimum size of the riser shall be 4 in. (100 mm) unless hydraulic calculations indicate that a smaller size riser will satisfy sprinkler and hose stream allowances.
(3) Each combined sprinkler and standpipe riser shall be equipped with a riser control valve to permit isolating a riser without interrupting the supply to other risers from the same source of supply. *(For fire department connections serving standpipe and sprinkler systems, refer to Section 16.12.)*

Hose connections of 2½ in. (65 mm) are permitted to be attached to wet pipe sprinkler systems only. These connections can be used for final extinguishment of the fire or to cool residual heat. They are not to be treated as standpipe hose connections. If standpipes are installed and the standpipe system risers also supply the sprinklers, all provisions of NFPA 14, including the water supply and pressure provisions, need to be followed. When either one of the hose connections described in Section 16.15 is provided, the flow rates need only be added to the sprinkler system at the design pressure available at the point of connection to the sprinkler system pipe.

Where risers are used to supply combination sprinkler and standpipe systems, guidance is needed to avoid confusion where systems in remotely located areas are controlled by more than one valve. No appreciable improvement in reliability is realized by interconnection. In addition, if the risers are cross-connected and the hydraulic calculations account for that feature, the sprinkler system might not perform as intended if one of the risers is removed from service.

A.16.15.2.2 See Figure A.16.15.2.2(a) and Figure A.16.15.2.2(b).

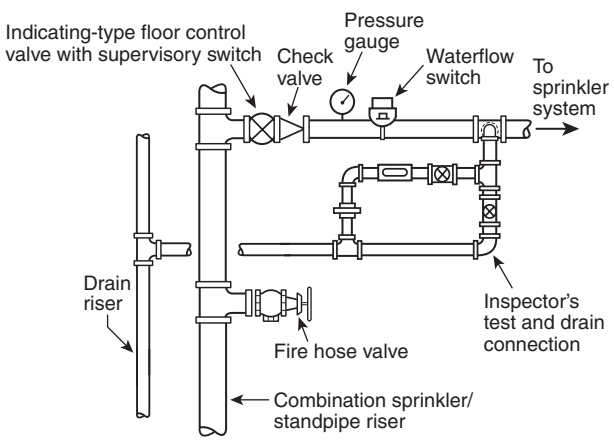

FIGURE A.16.15.2.2(a) *Acceptable Piping Arrangement for Combined Sprinkler/Standpipe System. [14:Figure A.6.3.5(a)]*

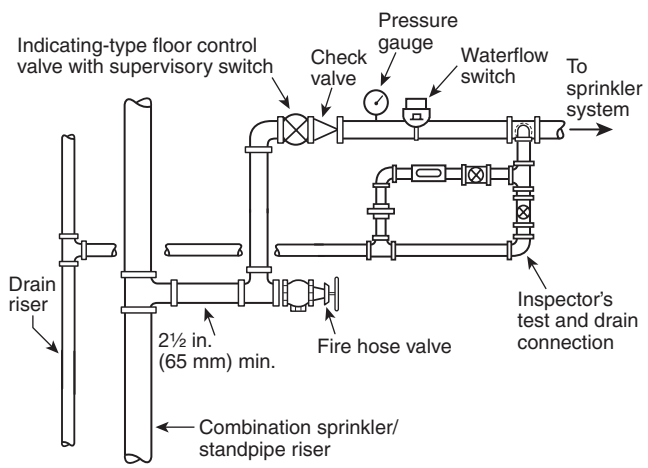

FIGURE A.16.15.2.2(b) *Acceptable Piping Arrangement for Combined Sprinkler/Standpipe System. [14:Figure A.6.3.5(b)]*

16.16 Electrical Bonding and Grounding.

16.16.1 In no case shall sprinkler system piping be used for the grounding of electrical systems.

16.16.2* The requirement of 16.16.1 shall not preclude the bonding of the sprinkler system piping to the lightning protection grounding system as required by NFPA 780 in those cases where lightning protection is provided for the structure.

EDUFIRE.IR

A.16.16.2 While the use of the sprinkler system piping as the grounding electrode for the building is prohibited, *NFPA 70* requires that all metallic piping systems be bonded to disperse stray electrical currents. Therefore, the sprinkler system piping might be bonded to other metallic systems.

16.17* Signs. (Reserved)

A.16.17 Table A.16.17 is a summary of the requirements for signs in NFPA 13.

TABLE A.16.17 *Sprinkler System Signage Summary*

Section	*Sign Location*	*Sign Information/Requirements*
16.9.12	Control valves Drain valves Test connection valves	Identification sign Sign must be made of weatherproof metal or rigid plastic and attached with corrosion-resistant wire or chain
8.6.1.4 and 8.6.1.5	Antifreeze system main valve	Indicate the following: Antifreeze manufacturer Antifreeze type Antifreeze concentration
16.9.3.5	Control valves	Indicate valve function Indicate system being controlled
16.10.5.3.7	Dry valve Preaction valve	Number of low point drains Location of each drain
16.12.5.6	Fire department connections not serving the whole building	Indicate portion of the building served by the fire department connection
16.12.5.8	All fire department connections	Indicate systems served by the fire department connection Indicate system pressure demand [for systems requiring more than 150 psi (10 bar)] Letters must be 1 in. (25 mm) in height
28.5	Alarm valve Dry pipe valve Preaction valve Deluge valve	Indicate the following: Location of the design area or areas Size (area) of or number of sprinklers in the design area Discharge densities over the design area or areas Required flow and residual pressure demand at the base of the riser Occupancy classification or commodity classification and maximum permitted storage height and configuration Hose stream allowance The installing contractor Sign must be made of weatherproof metal or rigid plastic and attached with corrosion-resistant wire or chain

EDUFIRE.IR

TABLE A.16.17 Continued

Section	*Sign Location*	*Sign Information/Requirements*
28.6	System control riser Antifreeze loops Auxiliary systems Control valves	Indicate the following: Name and location of the facility protected Occupancy classification Commodity classification Presence of high-piled and/or rack storage Maximum height of storage planned Aisle width planned Encapsulation of pallet loads Presence of solid shelving Flow test data Presence of flammable/combustible liquids Presence of hazardous materials Presence of other special storage Location of venting valve Location of auxiliary drains and low point drains on dry pipe and preaction systems Sign must be made of weatherproof metal or rigid plastic and attached with corrosion-resistant wire or chain
30.2.7.5	Fire department connection (FDC)	18 in. × 18 in. (450 mm × 450 mm) sign FDC symbol from NFPA 170 Located at connection in plain sight from shore access point
A.16.11.2	Central station, auxiliary, remote station, or proprietary protective signaling systems	Recommended: Located near the device Direct people to call police or fire department when bell rings

References Cited in Commentary

National Fire Protection Association, 1 Batterymarch Park, Quincy, MA 02169-7471.

NFPA 13E, *Recommended Practice for Fire Department Operations in Properties Protected by Sprinkler and Standpipe Systems*, 2015 edition.

NFPA 14, *Standard for the Installation of Standpipe and Hose Systems*, 2016 edition.

NFPA 20, *Standard for the Installation of Stationary Pumps for Fire Protection*, 2019 edition.

NFPA 24, *Standard for the Installation of Private Fire Service Mains and Their Appurtenances*, 2019 edition.

NFPA 25, *Standard for the Inspection, Testing, and Maintenance of Water-Based Fire Protection Systems*, 2017 edition.

NFPA 72®, National Fire Alarm and Signaling Code®, 2019 edition.

Hall, John R., Jr., *U.S. Experience with Sprinklers*, NFPA Fire Analysis and Research Division, 2008.

American Society of Mechanical Engineers, Three Park Avenue, New York, NY 10016-5990.

ASME B1.20.1, *Pipe Threads, General Purpose (inch)*, 2013.

EDUFIRE.IR

EDUFIRE.IR

Installation Requirements for Hanging and Support of System Piping

CHAPTER

17

REORGANIZATION NOTE

Formerly Chapter 9, this chapter has been revised editorially and assigned new section numbers. Trapeze hanger requirements have been relocated from the general requirements section and moved to Section 17.3, but the requirements themselves have not been changed.

Chapter 17 addresses the requirements for supporting water-based fire protection systems due to gravity loads. Section 17.1 contains general requirements for supporting these piping systems. The hanger requirements in NFPA 13 generally address support from overhead structural members. In some cases, however, wall-mounted or floor support of piping is more appropriate where support from the overhead structure is neither feasible nor practical.

Section 17.2 discusses the components for hangers, including requirements for acceptable types of hangers, while Section 17.3 covers trapeze hangers in detail. Section 17.4 covers hanger installation guidelines, and Section 17.5 covers pipe stands where the piping network is supported from the floor.

The Technical Committee on Hanging and Bracing of Water-Based Fire Protection Systems has attempted to make this chapter suitable for reference by other fire protection system documents that are seeking guidance on proper support for piping, such as NFPA 14, *Standard for the Installation of Standpipe and Hose Systems*, and NFPA 15, *Standard for Water Spray Fixed Systems for Fire Protection*.

17.1* General.

A.17.1 See Figure A.17.1. As an alternative to the conventional method of hanging pipe from the structure using attachments and rod, the piping can be simply laid on the structural member, provided the structure can adequately support the added load in accordance with 17.4.1.3.1 and the maximum distance between supports as required by Chapter 17 is not exceeded. Listed pipe should still be installed and supported in accordance with its listing limitations.

To prevent pipe movement, it should be secured with an approved device to the structure and located to ensure that the system piping remains in its original location and position.

Hangers can consist of a single component, such as a U-hook, or consist of separate components, such as a rod, a ring, and a C-clamp. Fasteners used to secure the hanger to the building structure are considered part of the hanger and must meet the applicable requirements of NFPA 13.

In separate component configurations, the first component attaches to the building structure, such as the C-clamp attached to the I-beam shown in Exhibit 17.1. The second component is the part of the hanger assembly that is attached to the sprinkler piping. Exhibit 17.1 shows an adjustable swivel ring as the pipe attachment component. The third component is the connecting piece that joins the building attachment component with the pipe attachment component. In Exhibit 17.1, an all-thread rod is used for that purpose.

EXHIBIT 17.1 Hanger Assembly Consisting of C-Clamp, Adjustable Swivel Ring, and All-Thread Rod. (Courtesy of TOLCO)

EDUFIRE.IR

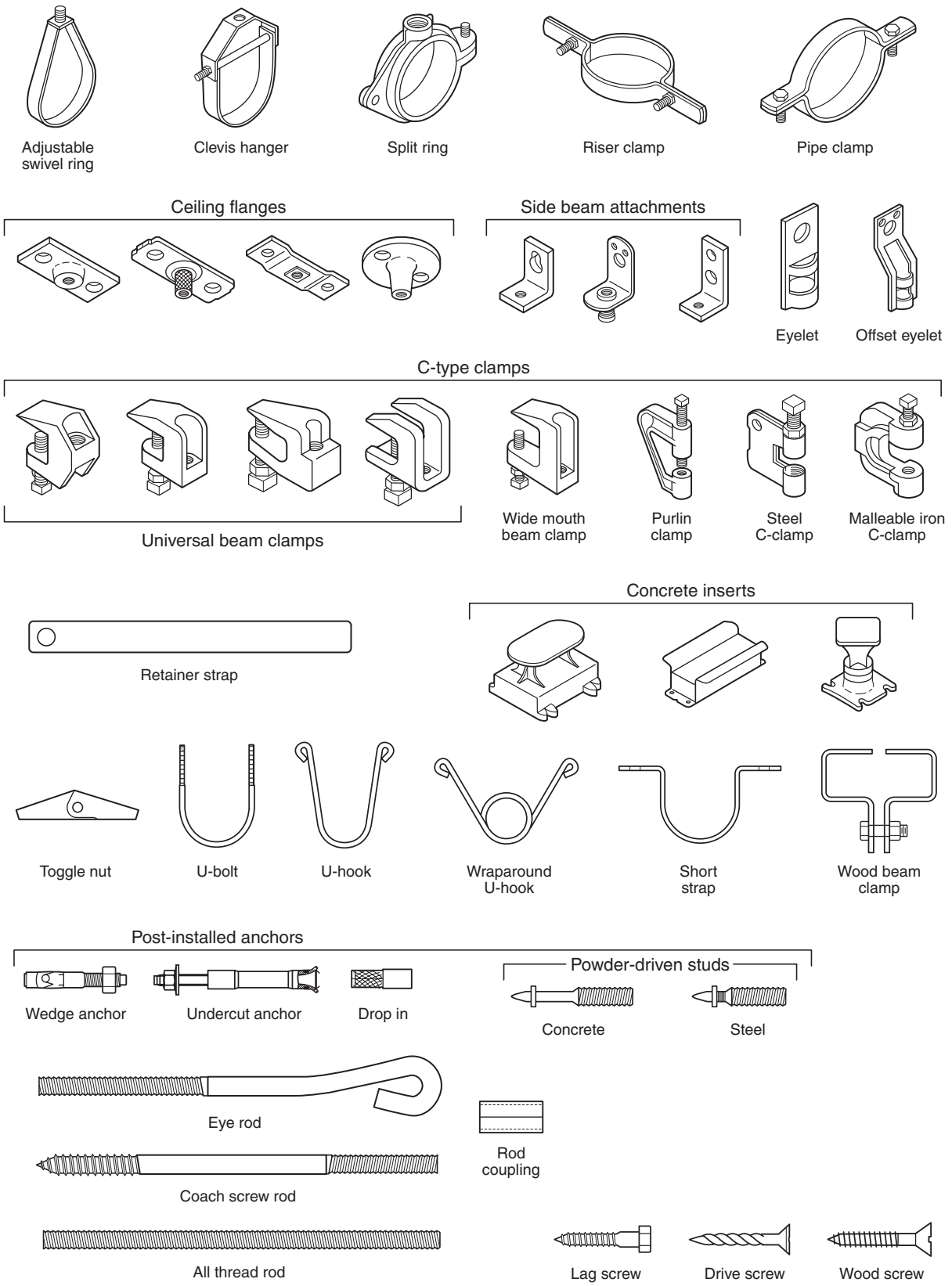

FIGURE A.17.1 *Common Types of Acceptable Hangers.*

EDUFIRE.IR

17.1.1 Unless the requirements of 17.1.2 are met, types of hangers shall be in accordance with the requirements of Chapter 17.

17.1.2 Hangers certified by a registered professional engineer to include all of the following shall be an acceptable alternative to the requirements of Chapter 17:

(1) Hangers shall be designed to support five times the weight of the water-filled pipe plus 250 lb (115 kg) at each point of piping support.
(2) These points of support shall be adequate to support the system.
(3) The spacing between hangers shall not exceed the value given for the type of pipe as indicated in Table 17.4.2.1(a) or Table 17.4.2.1(b).
(4) Hanger components shall be ferrous.
(5) Detailed calculations shall be submitted, when required by the reviewing authority, showing stresses developed in hangers, piping, and fittings, and safety factors allowed.

Subsection 17.1.2 permits a performance-based approach in place of the requirements of 17.1.1 to accommodate unusual applications or situations. The performance-based approach requires the services of a professional engineer to certify that the five conditions specified in 17.1.2(1) through (5) are satisfied. The safety factor of five times the weight of the water-filled pipe plus 250 lb (115 kg) is traditional for fire protection piping and addresses the extra stress imposed by system installation, future construction activities, and possible physical impact from equipment. As a fire safety system, it is paramount that the system withstand this potential abuse, and the provisions of 17.1.2 ensure that durability is provided. As a result, system reliability is maintained.

This performance-based alternative typically is not used where listed hangers meet the support requirements. It does permit the use of other methods where listed hangers cannot be used for a particular building arrangement or system configuration. The structure also must be able to carry the load, as further described in the commentary following 17.4.1.3.1.

The 250 lb (115 kg) load is specified to be applied at the point of piping support in recognition of the fact that some types of piping will not support the additional load at a point mid-span between hangers.

17.1.3 Support of Non-System Components.

17.1.3.1* Sprinkler piping or hangers shall not be used to support non-system components.

Using sprinkler system components to support other components is strictly prohibited by 17.1.3.1. Items commonly found in violation of this requirement are piping, wiring, signage, or even decorations.

The detectors and wiring associated with a preaction or deluge system are permitted to be supported from the system piping because they are sprinkler system components. However, detection systems not associated with the sprinkler system cannot be attached to the piping.

The arrangement shown in Exhibit 17.2, in which the electrical conduit is draped over and supported by the sprinkler piping, violates the requirement in 17.1.3.1.

A.17.1.3.1 The rules covering the hanging of sprinkler piping take into consideration the weight of water-filled pipe plus a safety factor. No allowance has been made for the hanging

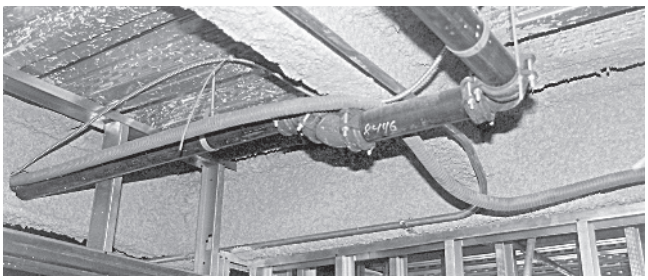

EXHIBIT 17.2 Sprinkler Pipe Inappropriately Used to Support Electrical Conduit.

EDUFIRE.IR

of non-system components from sprinkler piping. NFPA 13 provides the option to support sprinkler piping from other sprinkler piping where the requirements of 17.1.2 are met.

17.1.3.2 Sprinkler piping shall be permitted to utilize shared support structures in accordance with 17.1.4.

17.1.4 Shared support structures shall be certified by a registered professional engineer in accordance with 17.1.2 and 17.1.4.

A shared support structure is a hanger or support designed for use by multiple systems. Generally, this is a trapeze-style hanger that is arranged to support several pipes, such as chilled water lines, conduits, piping, or ductwork. With some building structures, shared supports are the most efficient way to support the gravitational load of systems installed in the building.

The requirements in 17.1.4 provide guidance to the professional engineer regarding the safety factors that should be applied to the weights of the systems sharing the support structure. Not all systems use the same factors as those applied for hangers of fire sprinkler systems. When a life safety system is combined with other systems, the supports need to be planned with the higher safety factors. It is the intent of this subsection to require any shared support structure to be constructed such that the minimum strength of the pipe support be equal to or greater than what is needed to support all items attached to the pipe support with the same durability and reliability as that required for a sprinkler pipe hanger.

17.1.4.1* The design of a shared support structure shall be based on either 17.1.4.1.1 or 17.1.4.1.2.

A.17.1.4.1 A shared support structure can be in the form of a pipe rack structure, a trapeze assembly, pipe stand, or other similar assembly. It is not the intent of this section for a building structure to be considered a shared support structure. Storage racks are not intended to be considered a shared support structure.

17.1.4.1.1 Sprinkler pipe and other distribution systems shall be permitted to be supported from a shared support structure designed to support five times the weight of water-filled sprinkler pipe and other supported distribution systems plus 250 lb (115 kg), based on the allowable ultimate stress.

17.1.4.1.2 Sprinkler pipe and other distribution systems shall be permitted to be supported from a shared support structure designed to support five times the weight of the water-filled sprinkler pipe plus 250 lb (115 kg), and one and one-half times the weight of all other supported distribution systems.

17.1.4.1.3 The building structure shall not be considered a shared support structure.

17.1.4.1.4* The requirements of 17.1.4.1 shall not apply to 17.4.1.3.3.

A.17.1.4.1.4 It is not the intent of 17.1.4.1 to apply to flexible sprinkler hose fittings or ceiling systems.

Paragraph 17.1.4.1.4 clarifies that the bracket for flexible hose assemblies and the suspended ceiling grid to which these assemblies are commonly attached are not to be considered a shared support structure.

17.1.4.1.5 Systems that are incompatible with the fire sprinkler systems based on vibration, thermal expansion and contraction, or other factors shall not share support structures.

17.1.5 Where water-based fire protection systems are required to be protected against damage from earthquakes, hangers shall also meet the requirements of Section 18.7.

Hangers can experience forces other than those resulting from gravity in areas subject to earthquakes. Additional measures, as required in Section 18.7, are needed for certain hanger arrangements to guard against the effects of those forces.

EDUFIRE.IR

17.1.6 Listing.

17.1.6.1* Unless permitted by 17.1.6.2 or 17.1.6.3, the components of hanger assemblies that directly attach to the pipe, building structure, or racking structure shall be listed.

Components must be listed to be used specifically as fire sprinkler pipe hangers, not simply listed for some other purpose. A good example of this is the commonly used two-piece strut clamp. The clamp is listed but for use with electrical conduit, not for fire sprinkler pipe.

N **A.17.1.6.1** The listing requirements for water-based fire protection system hanger components include five times the weight of water-filled piping plus 250 lb (115 kg). However, once the listing is achieved, manufacturers often present their data in simple terms of what size pipe can be supported. The published loads in technical data sheets often represent one times the load of the piping that can be supported at maximum hanger spacing. If the product has been listed for use with fire protection systems, it has been shown to accommodate five times the weight of the water-filled pipe plus 250 lb (115 kg).

17.1.6.2* Mild steel hanger rods and hangers formed from mild steel rods shall be permitted to be not listed.

Mild steel hanger rods are not required to be listed according to 17.1.6.2. Standard practice has demonstrated that rods in the sizes required in Table 17.2.1.1 can support, at maximum permitted spacing, five times the weight of water-filled Schedule 40 pipe plus 250 lb (115 kg) applied as a temporary point load. U-bolts, U-hooks, and eye rods also are considered types of mild steel hangers formed from rods and meet the conditions of 17.1.6.2.

A.17.1.6.2 Generic items utilized with hanger rods and fasteners are not required to be listed. These include items such as bolts, screws, washers, nuts, and lock nuts.

17.1.6.3* Fasteners as specified in 17.2.2, 17.2.3, and 17.2.4 shall be permitted to be not listed.

Although 17.1.6.3 states that screws, bolts, and other fastener items identified in 17.2.2, 17.2.3, and 17.2.4 are considered part of the hanger assembly and do not require listing, this exemption does not override the provisions of those subsections that require specific items to be listed. Other fasteners not specifically identified in 17.2.2, 17.2.3, or 17.2.4 must be listed.

A.17.1.6.3 Generic items utilized with hanger rods and fasteners are not required to be listed. These include items such as bolts, screws, washers, nuts, and lock nuts.

17.1.6.4 Other fasteners shall be permitted as part of a hanger assembly that has been tested, listed, and installed in accordance with the listing requirements.

It is acceptable for a hanger manufacturer to obtain a specific listing for a hanger component and to require a specific method of attachment that might be different from the methods specified in NFPA 13. An example of this is a 4 in. (100 mm) pipe being supported from a wood member using a side beam bracket and wood screws as specified on a hanger manufacturer's cut sheet for the listed side beam bracket. In this example, the ½ in. × 3 in. (13 mm × 75 mm) lag would not be required.

17.1.7 Component Material.

17.1.7.1 Unless permitted by 17.1.7.2 or 17.1.7.3, hangers and their components shall be ferrous metal.

17.1.7.2 Nonferrous components that have been proven by fire tests to be adequate for the hazard application, that are listed for this purpose, and that are in compliance with the other requirements of this section shall be acceptable.

17.1.7.3 Holes through solid structural members shall be permitted to serve as hangers for the support of system piping, provided such holes are permitted by applicable building codes and the spacing and support provisions for hangers of this standard are satisfied.

To avoid the weakening of a beam or joist, most codes prohibit cutting a hole in the top or bottom third of the depth and anywhere within a length equal to twice the depth from either end support. Before any holes

EDUFIRE.IR

are made in structural members, a structural engineer should be consulted or the manufacturer's guidelines should be reviewed to ensure that the structure will be capable of supporting the necessary loads.

17.2 Hanger Components.

17.2.1 Hanger Rods.

17.2.1.1 Unless the requirements of 17.2.1.2 are met, hanger rod size shall be the same as that approved for use with the hanger assembly, and the size of rods shall not be less than that given in Table 17.2.1.1.

TABLE 17.2.1.1 *Hanger Rod Sizes*

Pipe Size		*Diameter of Rod*	
in.	*mm*	*in.*	*mm*
Up to and including 4	100	⅜	10
5	125	½	13
6	150		
8	200		
10	250	⅝	16
12	300	¾	20

17.2.1.2 Rods of smaller diameters than indicated in Table 17.2.1.1 shall be permitted where the hanger assembly has been tested and listed by a testing laboratory and installed within the limits of pipe sizes expressed in individual listings.

17.2.1.3 Where the pitch of the branch line is 6 in 12 or greater, a reduction in the lateral loading on branch line hanger rods shall be done by one of the following:

(1)* Second hanger installed in addition to the required main hangers
(2) Lateral sway brace assemblies on the mains
(3) Branch line hangers utilizing an articulating structural attachment
(4) Equivalent means providing support to the branch line hanger rods

The provision to install hanger rods to avoid lateral gravity loads was expanded in the 2010 edition to clarify that such loads are of concern only where the pitch of the pipe exceeds 6 in 12, an angle of 45 degrees. Several options are provided to address these lateral loads. The example shown in Figure A.17.2.1.3(1) shows line piping, but the same concern exists for lateral gravity loads on hangers for mains.

A.17.2.1.3(1) Hanger rods are intended only to be loaded axially (along the rod). Lateral loads can result in bending, weakening, and even breaking of the rod. Additional hangers or restraints could be necessary to minimize nonaxial loads that could induce bending or deflection of the rods. See Figure A.17.2.1.3(1) for an example of additional hangers utilized to minimize nonaxial loads.

17.2.1.4 U-Hooks. The size of the rod material of U-hooks shall not be less than that given in Table 17.2.1.4.

TABLE 17.2.1.4 *U-Hook Rod Sizes*

Pipe Size		*Hook Material Diameter*	
in.	*mm*	*in.*	*mm*
Up to and including 2	50	5⁄16	8
2½ to 6	65 to 150	⅜	10
8	200	½	13

EDUFIRE.IR

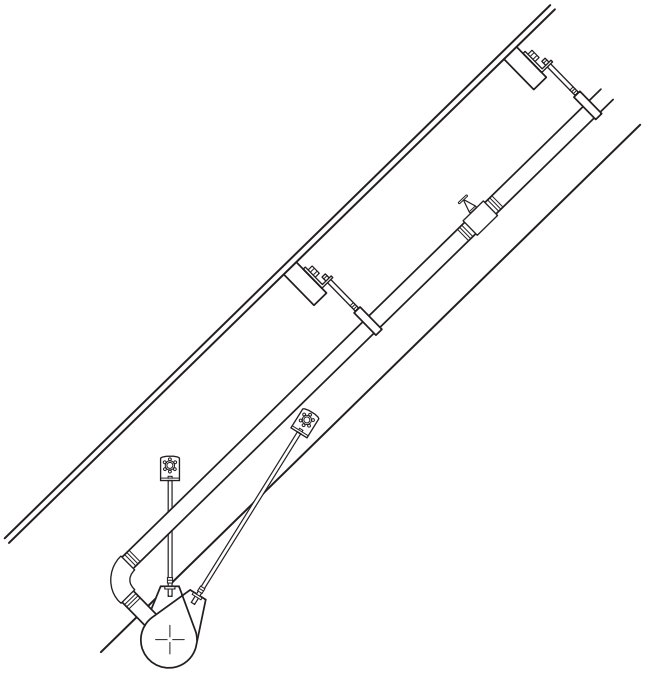

FIGURE A.17.2.1.3(1) *Example of Additional Hangers Utilized to Minimize Nonaxial Loads.*

17.2.1.5 Eye Rods.

17.2.1.5.1 The size of the rod material for eye rods shall not be less than specified in Table 17.2.1.5.1.

TABLE 17.2.1.5.1 *Eye Rod Sizes*

Pipe Size		*Diameter of Rod*			
		With Bent Eye		*With Welded Eye*	
in.	*mm*	*in.*	*mm*	*in.*	*mm*
Up to and including 4	100	⅜	10	⅜	10
5	125	½	13	½	13
6	150	½	13	½	13
8	200	¾	20	½	13

17.2.1.5.2 Eye rods shall be secured with lock washers to prevent lateral motion.

17.2.1.5.3 Where eye rods are fastened to wood structural members, the eye rod shall be backed with a large flat washer bearing directly against the structural member, in addition to the lock washer.

17.2.1.6 Threaded Sections of Rods. Threaded sections of rods shall not be formed or bent.

Th requirement in 17.2.1.6 also applies to the rod once it is installed. Cracks can result if the rod is arranged with a lateral load applied to it. In other words, the rod must be axially loaded once it is connected between the building structure and the system pipe. Hanger attachments are available that are listed for attaching to the building structure and that can accommodate angles from vertical, allowing the rod to remain unbent.

FAQ [17.2.1.6]

Why do the requirements of 17.2.1.6 prohibit the bending of threaded sections of rods?

Bending the threaded sections of hanger rods could result in cracks at the thread root. Such cracks affect structural strength and can lead to failure of the rod.

17.2.2* Fasteners in Concrete.

A.17.2.2 In areas that are subject to provisions for earthquake protection, the fasteners in concrete will need to be prequalified. See 18.7.8 for information.

EDUFIRE.IR

17.2.2.1 Unless prohibited by 17.2.2.2 or 17.2.2.3, the use of listed inserts set in concrete and listed post-installed anchors to support hangers shall be permitted for mains and branch lines.

The use of post-installed anchors should be limited to ones that are compliant with ACI 318.2, *Building Code Requirements for Concrete Thin Shells*.

17.2.2.2 Post-installed anchors shall not be used in cinder concrete, except for branch lines where the post-installed anchors are alternated with through-bolts or hangers attached to beams.

The term *post-installed anchors* is used in place of the term *expansion shields* to more accurately describe the range of products used for fastening to concrete other than inserts set in concrete at the time of pouring. The effectiveness of post-installed anchors depends on the gripping power of the material in which they are installed. Anchors pull out of soft materials such as gypsum.

17.2.2.3 Post-installed anchors shall not be used in ceilings of gypsum or other similar soft material.

17.2.2.4 Unless the requirements of 17.2.2.5 are met, post-installed anchors shall be installed in a horizontal position in the sides of concrete beams.

Post-installed anchors installed in a horizontal position are more secure because the associated hanger assembly is not subject to a direct downward pulling force (see Exhibit 17.3). However, under the conditions specified in 17.2.2.5, post-installed anchors can be installed in a vertical position (see Exhibit 17.4). Not all post-installed anchors are created equal, and the strength of different available anchors can vary greatly. Care should be given to make sure that the anchor used in the plans and the design is the same anchor used for the installation. The installation method of a post-installed anchor is also important, and it should be installed in accordance with the manufacturer's directions.

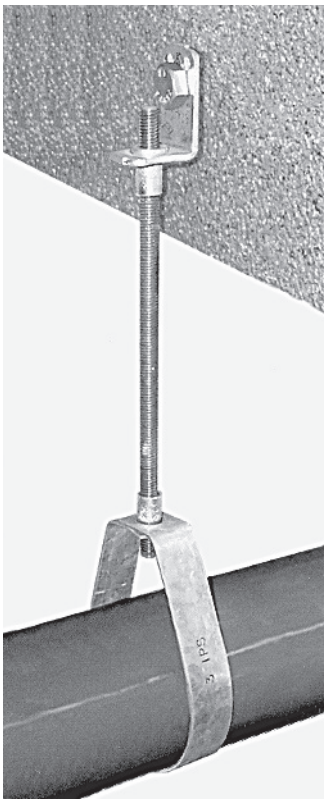

EXHIBIT 17.3 *Hanger Assembly Attached to Concrete That Uses Post-Installed Anchor in Horizontal Position.*

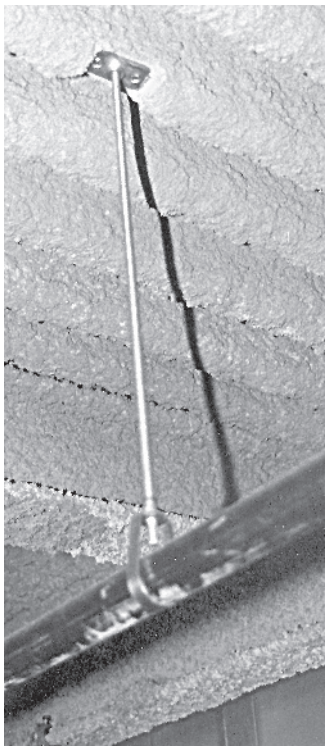

EXHIBIT 17.4 *Hanger Assembly Attached to Concrete Decking That Uses Post-Installed Anchors in Vertical Position.*

EDUFIRE.IR

17.2.2.5 Post-installed anchors shall be permitted to be installed in the vertical position under any of the following conditions:

(1) When used in concrete having gravel or crushed stone aggregate to support pipes 4 in. (100 mm) or less in diameter
(2) When post-installed anchors are alternated with hangers connected directly to the structural members, such as trusses and girders, or to the sides of concrete beams [to support pipe 5 in. (125 mm) or larger]
(3) When post-installed anchors are spaced not over 10 ft (3 m) apart [to support pipe 4 in. (100 mm) or larger]

17.2.2.6 Holes for post-installed anchors in the side of beams shall be above the centerline of the beam or above the bottom reinforcement steel rods.

Post-installed anchors must be located where they provide appropriate strength capacities. If a reinforcing rod is contacted during the drilling for a post-installed anchor, a new hole above the bottom reinforcing rod must be made to the required depth.

17.2.2.7 Holes for post-installed anchors used in the vertical position shall be drilled to provide uniform contact with the shield over its entire circumference.

The hole and installation method of a post-installed anchor should follow the manufacturer's installation instructions. Otherwise the anchor might not be able to support the required load.

17.2.2.8 The depth of the post-installed anchor hole shall not be less than specified for the type of shield used.

17.2.2.9 Powder-Driven Studs.

17.2.2.9.1 Powder-driven studs, welding studs, and the tools used for installing these devices shall be listed.

The limitations placed on powder-actuated tools vary depending on the individual tool. The limitations of each device and the components of its installation unit are specified in its individual listing. In many jurisdictions, the use of powder-driven studs into concrete is prohibited for use with sprinkler pipe.

17.2.2.9.2 Pipe size, installation position, and construction material into which they are installed shall be in accordance with individual listings.

17.2.2.9.3* Representative samples of concrete into which studs are to be driven shall be tested to determine that the studs will hold a minimum load of 750 lb (340 kg) for 2 in. (50 mm) or smaller pipe; 1000 lb (454 kg) for 2½ in., 3 in., or 3½ in. (65 mm, 80 mm, or 90 mm) pipe; and 1200 lb (544 kg) for 4 in. or 5 in. (100 mm or 125 mm) pipe.

A.17.2.2.9.3 The ability of concrete to hold the studs varies widely according to type of aggregate, quality of concrete, and proper installation.

The concrete in the facility where the system is being installed must be tested to ascertain that powder-driven studs do not have less than the indicated holding power. The strength of the concrete varies, depending on the type of cement and aggregate used and the necessary cure time for the concrete. The combined requirements of this section for load testing in addition to the load requirements of 17.4.1.3.1 are to ensure that the powder-driven studs will perform as required. The loads required in 17.2.2.9.3 are test loads, not working loads. Working loads are those recognized in the listing of the studs and the NFPA 13 requirements.

17.2.2.9.4 Increaser couplings shall be attached directly to the powder-driven studs.

This paragraph addresses the issue that listings commonly permit studs with a smaller diameter than those required by Table 17.2.1.1 for rods. Hanger rods that comply with the dimensions given in Table 17.2.1.1 must be connected directly to the studs with increaser couplings.

EDUFIRE.IR

17.2.2.10 Minimum Bolt or Rod Size for Concrete.

17.2.2.10.1 The size of a bolt or rod used with a hanger and installed through concrete shall not be less than specified in Table 17.2.2.10.1.

TABLE 17.2.2.10.1 *Minimum Bolt or Rod Size for Concrete*

Pipe Size		*Size of Bolt or Rod*	
in.	*mm*	*in.*	*mm*
Up to and including 4	100	⅜	10
5	125	½	13
6	150		
8	200		
10	250	⅝	16
12	300	¾	20

17.2.2.10.2 Holes for bolts or rods shall not exceed 1⁄16 in. (1.6 mm) greater than the diameter of the bolt or rod.

17.2.2.10.3 Bolts and rods shall be provided with flat washers and nuts.

17.2.3 Fasteners in Steel.

17.2.3.1* Powder-driven studs, welding studs, and the tools used for installing these devices shall be listed.

The limitations placed on powder-actuated tools and stud welders vary, depending on the individual tool. The limitations of each device and the components of its installation unit are specified in its individual listing, which is required by 17.2.3.1. In many jurisdictions, the use of powder-driven studs into steel is prohibited for use with sprinkler pipe.

A.17.2.3.1 Powder-driven studs should not be used in steel of less than 3⁄16 in. (5 mm) total thickness.

17.2.3.2 Pipe size, installation position, and construction material into which they are installed shall be in accordance with individual listings.

17.2.3.3 Increaser couplings shall be attached directly to the powder-driven studs or welding studs.

Listings commonly permit studs with a smaller diameter than that required by Table 17.2.1.1 for rods. Hanger rods that comply with the dimensions given in Table 17.2.1.1 must be connected directly to the studs with increaser couplings.

17.2.3.4 Welding studs or other hanger parts shall not be attached by welding to steel less than U.S. Standard, 12 gauge (2.8 mm).

U.S. Standard, 12 gauge (2.8 mm) is 0.081 in. (2.06 mm) thick. Steel that is any thinner lacks the necessary strength for welding.

17.2.3.5 Minimum Bolt or Rod Size for Steel.

17.2.3.5.1 The size of a bolt or rod used with a hanger and installed through steel shall not be less than specified in Table 17.2.3.5.1.

17.2.3.5.2 Holes for bolts or rods shall not exceed 1⁄16 in. (1.6 mm) greater than the diameter of the bolt or rod.

17.2.3.5.3 Bolts and rods shall be provided with flat washers and nuts.

EDUFIRE.IR

TABLE 17.2.3.5.1 Minimum Bolt or Rod Size for Steel

Pipe Size		Size of Bolt or Rod	
in.	*mm*	*in.*	*mm*
Up to and including 4	100	⅜	10
5	125	½	13
6	150		
8	200		
10	250	⅝	15
12	300	¾	20

17.2.4 Fasteners in Wood.

NFPA 13 does not specifically address the use of fasteners to engineered wood products, which are commonly referred to as composite wood joists. Hangers connected to composite wood joists should be installed according to the joist manufacturer's directions. Many of the manufacturers of composite wood joists have developed guidelines specifically for hanging fire protection pipe from their products. These guidelines detail fastener methods and pipe size limitations. In addition to the joist manufacturers, fastener manufacturers also have developed listed products that can be used to attach hangers from composite wood joists. Use of these listed fasteners should be in accordance with their listings.

17.2.4.1 Drive Screws.

17.2.4.1.1 Drive screws shall be used only in a horizontal position as in the side of a beam and only for 2 in. (50 mm) or smaller pipe.

17.2.4.1.2 Drive screws shall only be used in conjunction with hangers that require two points of attachments.

Hangers that require two points of attachments are the only hangers where drive screws can be used, as stated in 17.2.4.1.2. Table 17.2.4.2.1 limits the use of drive screws to U-hooks supporting pipe with diameters of 2 in. (50 mm) or less. The acceptable level of performance with drive screws is restricted to those cases where the weight requirements are relatively small and where two drive screws are installed horizontally. However, listed hanger assemblies with two points of attachment intended to be used with drive screws are available. See Figure A.17.1 and Figure A.17.4.3.4.4(b) for illustrations of a drive screw and a U-hook.

17.2.4.2 Ceiling Flanges and U-Hooks with Screws.

17.2.4.2.1 Unless the requirements of 17.2.4.2.2 or 17.2.4.2.3 are met, for ceiling flanges and U-hooks, screw dimensions shall not be less than those given in Table 17.2.4.2.1.

The types of screws that can be used to fasten ceiling flanges and U-hooks to the building structure are identified in Table 17.2.4.2.1. The screw dimensions are intended for use with hangers spaced in accordance with Table 17.4.2.1(a) and Table 17.4.2.1(b) for steel pipe.

Where ceiling flanges are used, the screws are installed in a vertical position. As indicated in Table 17.2.4.2.1, only lag screws and wood screws are to be used to fasten ceiling flanges to the building structure. Other types of screws are not permitted. It is acceptable to use a different type of wood fastener provided that it is specifically listed for the purpose of hanging fire protection pipe; the wood member to which the fastener is attached must still meet the requirements of 17.4.1.3.1.

For U-hook applications, the screws are installed in a horizontal position [see Figure A.17.4.3.4.4(b)]. Drive screws can only be installed horizontally in conjunction with U-hooks to support 2 in. (50 mm) or smaller pipe, in accordance with 17.2.4.1. Drive screws, which are intended to be installed with a hammer, do not have the holding capacity of wood screws and lag screws.

EDUFIRE.IR

TABLE 17.2.4.2.1 *Screw Dimensions for Ceiling Flanges and U-Hooks*

Pipe Size		
in.	***mm***	***Two Screw Ceiling Flanges***
Up to and including 2	50	Wood screw No. 18 × 1½ in. or Lag screw 5⁄16 in. × 1½ in. (8 mm × 40 mm)
		Three Screw Ceiling Flanges
Up to and including 2	50	Wood screw No. 18 × 1½ in.
2½	65	Lag screw ⅜ in. × 2 in. (10 mm × 50 mm)
3	80	
3½	90	
4	100	Lag screw ½ in. × 2 in. (13 mm × 50 mm)
5	125	
6	150	
8	200	Lag screw ⅝ in. × 2 in. (16 mm × 50 mm)
		Four Screw Ceiling Flanges
Up to and including 2	50	Wood screw No. 18 × 1½ in.
2½	65	Lag screw ⅜ in. × 1½ in. (10 mm × 40 mm)
3	80	
3½	90	
4	100	Lag screw ½ in. × 2 in. (13 mm × 50 mm)
5	125	
6	150	
8	200	Lag screw ⅝ in. × 2 in. (16 mm × 50 mm)
		U-Hooks
Up to and including 2	50	Drive screw No. 16 × 2 in.
2½	65	Lag screw ⅜ in. × 2½ in. (10 mm × 65 mm)
3	80	
3½	90	
4	100	Lag screw ½ in. × 3 in. (13 mm × 75 mm)
5	125	
6	150	
8	200	Lag screw ⅝ in. × 3 in. (16 mm × 75 mm)

17.2.4.2.2 When the thickness of planking and thickness of flange do not permit the use of screws 2 in. (50 mm) long, screws 1¾ in. (45 mm) long shall be permitted with hangers spaced not over 10 ft (3 m) apart.

17.2.4.2.3 When the thickness of beams or joists does not permit the use of screws 2½ in. (65 mm) long, screws 2 in. (50 mm) long shall be permitted with hangers spaced not over 10 ft (3 m) apart.

Paragraph 17.2.4.2.3 recognizes that the use of screws with the lengths specified in Table 17.2.4.2.1 is not always possible and permits the use of shorter screws with closer hanger spacing.

17.2.4.3 Bolts, Rods, or Lag Screws.

17.2.4.3.1 Unless the requirements of 17.2.4.3.2 are met, the size of bolt, rod, or lag screw used with a hanger and installed on the side of the beam shall not be less than specified in Table 17.2.4.3.1.

EDUFIRE.IR

TABLE 17.2.4.3.1 Minimum Bolt, Rod, or Lag Screw Sizes for Side of Beam Installation

Pipe Size		Size of Bolt, Rod or Lag Screw		Length of Lag Screw Used with Wood Beams	
in.	mm	in.	mm	in.	mm
Up to and including 2	50	⅜	10	2½	65
2½ to 6 (inclusive)	65 to 150	½	13	3	75
8	200	⅝	16	3	75

17.2.4.3.2 Where the thickness of beams or joists does not permit the use of screws 2½ in. (65 mm) long, screws 2 in. (50 mm) long shall be permitted with hangers spaced not over 10 ft (3 m) apart.

17.2.4.3.3 All holes for lag screws shall be pre-drilled ⅛ in. (3 mm) less in diameter than the maximum root diameter of the lag screw thread.

17.2.4.3.4 Holes for bolts or rods shall not exceed 1⁄16 in. (1.6 mm) greater than the diameter of the bolt or rod.

17.2.4.3.5 Bolts and rods shall be provided with flat washers and nuts.

17.2.4.4 Wood Screws. Wood screws shall be installed with a screwdriver.

Wood screws and lag bolts can provide the proper strength only when they are installed with the proper tools, which might include an electrically powered screwdriver. Hammering these screws in place can reduce their holding power and result in unacceptable installations.

17.2.4.5 Nails. Nails shall not be acceptable for fastening hangers.

17.2.4.6 Screws in Side of Timber or Joists.

17.2.4.6.1 Screws in the side of a timber or joist shall be not less than 2½ in. (65 mm) from the lower edge where supporting pipe is up to and including nominal 2½ in. (65 mm) and not less than 3 in. (75 mm) where supporting pipe is greater than nominal 2½ in. (65 mm).

17.2.4.6.2 The requirements of 17.2.4.6.1 shall not apply to 2 in. (50 mm) or thicker nailing strips resting on top of steel beams.

17.2.4.7 Coach Screw Rods.

17.2.4.7.1 Minimum Coach Screw Rod Size. The size of coach screw rods shall not be less than the requirements of Table 17.2.4.7.1.

TABLE 17.2.4.7.1 Minimum Coach Screw Rod Size

Pipe Size		Diameter of Rod		Minimum Penetration	
in.	mm	in.	mm	in.	mm
Up to and including 4	100	⅜	10	3	75
Larger than 4	100	NP	NP	NP	NP

NP: Not permitted.

17.2.4.7.2 The minimum plank thickness and the minimum width of the lower face of beams or joists in which coach screw rods are used shall be not less than that specified in Table 17.2.4.7.2 and shown in Figure 17.2.4.7.2.

FAQ [17.2.4.3.3]

Why does 17.2.4.3.3 require that holes be pre-drilled ⅛ in. (3 mm) smaller than the root diameter of the lag screw?

Pre-drilling holes ⅛ in. (3 mm) smaller than the root diameter of the lag screw thread combines ease of installation while providing a secure gripping capacity of the lag screw within the wood. The pre-drilling also minimizes the potential for the wood to split.

EDUFIRE.IR

TABLE 17.2.4.7.2 *Minimum Plank Thicknesses and Beam or Joist Widths*

Pipe Size		***Nominal Plank Thickness***		***Nominal Width of Beam or Joist Face***	
in.	***mm***	***in.***	***mm***	***in.***	***mm***
Up to and including 2	50	3	75	2	50
2½	65	4	100	2	50
3	80	4	100	3	75
3½	90				
4	100				

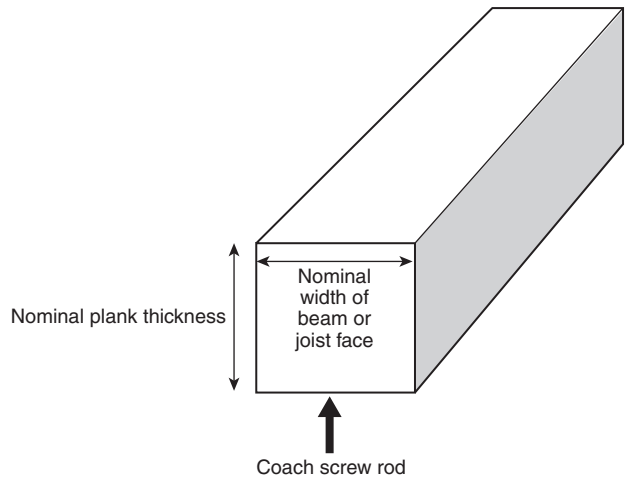

FIGURE 17.2.4.7.2 *Dimensions for Structural Members with Coach Screw Rods.*

The reference to nominal wood dimensions in Table 17.2.4.7.2 recognizes that nominal members such as 2 in. × 6 in. (50 mm × 150 mm) joists can only have an actual thickness of 1½ in. (40 mm). Exhibit 17.5 illustrates the installation of a coach screw rod in the bottom of a beam or joist. Once the coach screw rod is installed, the hanger is attached to it. Exhibit 17.6 illustrates the installation of coach screw rods in wood ceiling planking.

EXHIBIT 17.5 *Installation of Coach Screw Rod in Bottom of Beam or Joist.*

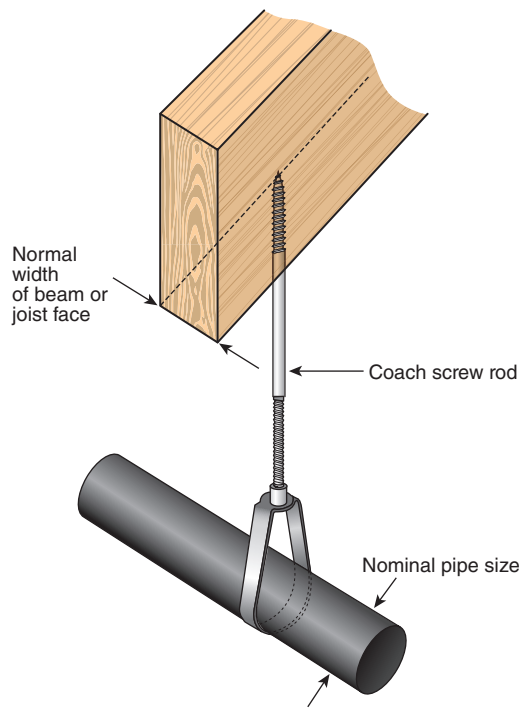

EDUFIRE.IR

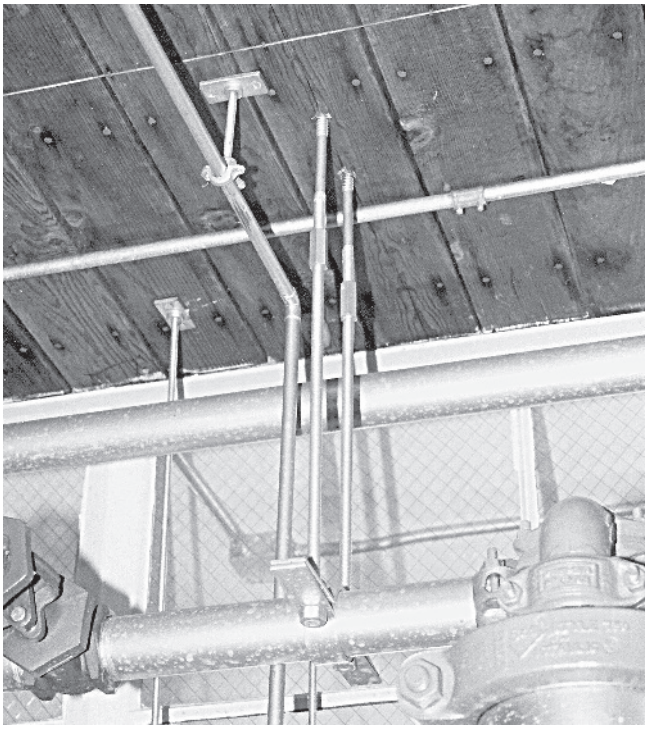

EXHIBIT 17.6 Installation of Coach Screw Rods in Wood Ceiling Planking.

17.2.4.7.3 Coach screw rods shall not be used for support of pipes larger than 4 in. (100 mm) in diameter.

17.2.4.7.4 All holes for coach screw rods shall be predrilled ⅛ in. (3 mm) less in diameter than the maximum root diameter of the wood screw thread.

FAQ [17.2.4.7.4]

Why does 17.2.4.7.4 require that holes be pre-drilled ⅛ in. (3 mm) smaller than the root diameter of the lag screw?

Pre-drilling holes ⅛ in. (3 mm) smaller than the root diameter of the coach screw thread combines ease of installation with assurance of the needed gripping power and also minimizes the potential for the wood to split.

17.3* Trapeze Hangers.

A trapeze hanger generally consists of a length of steel pipe or an angle iron that serves as a trapeze bar between the building structural members so that the fire protection piping can be supported. Conventional hangers are used to support the sprinkler system piping from the trapeze and can also be used to support the trapeze from the adjacent structural members. Hanger requirements of NFPA 13 apply to all the components of the trapeze hanger used to support the sprinkler pipe, from the building attachments and components connecting the trapeze to the building to any hanger components used to hang the system pipe.

The selection of the minimum size of pipe or angle that can serve as the bar of the trapeze is made on the basis of required section modulus. The section modulus relates to the ability of a structural member, including a length of pipe or angle used as a trapeze, to withstand flexure. The numbers in Table 17.3.1(a) provide the required section modulus for support of steel pipe, either Schedule 10 or Schedule 40. Table 17.3.1(b) provides the available section moduli for various diameters of Schedule 10 pipe, Schedule 40 pipe, and shapes of angles commonly used as trapeze bars. The section modulus for each member is denoted as *Z* in the accompanying Closer Look.

A trapeze is not always a large or long part of a hanger. Sometimes, the trapeze can be as simple as a 12 in. (300 mm) long piece of strut spanning the lower section of metal decking or a 24 in. (600 mm) long piece of strut between two roof joists spaced 16 in. (400 mm) apart. Even these short trapezes need to comply with the minimum section modulus.

EDUFIRE.IR

A.17.3 Table 17.3.1(a) assumes that the load from 15 ft (5 m) of water-filled pipe, plus 250 lb (115 kg), is located at the midpoint of the span of the trapeze member, with a maximum allowable bending stress of 15 ksi (111 kg). If the load is applied at other than the midpoint, for the purpose of sizing the trapeze member, an equivalent length of trapeze can be used, derived from the following formula:

$$L = \frac{4ab}{a+b} \qquad \textbf{[A.17.3]}$$

where:
L = equivalent length
a = distance from one support to the load
b = distance from the other support to the load

CLOSER LOOK [17.3.1]

Understanding Trapeze Installations

Take the example of a trapeze installation that involves the support of 4 in. (100 mm) Schedule 10 system pipe. The span, generally the horizontal distance between the building structural members that support the trapeze bar, is 6 ft (1.8 m) (see the adjacent illustration). The trapeze consists of an angle iron.

To determine the acceptable size of the trapeze, refer to Table 17.3.1(a) and verify that the required section modulus is 0.51 in.^{3} (8.4 cm^3). From Table 17.3.1(b), an angle iron with dimensions of 3 in. × 2 in. × ¼ in. (80 mm x 50 mm x 6 mm) provides a section modulus of 0.54 in.^{3} (8.8 cm^3). Any other angle (or pipe) with a section modulus equal to or greater than 0.51 in.^{3} (8.4 cm^3) would also be acceptable. In accordance with 17.3.3, the longer leg of the angle would be installed in the vertical position.

If Schedule 10 pipe were used as the trapeze in the same example, a nominal diameter of 2½ in. (65 mm) $Z = 0.69$ in.^{3} (11.3 cm^3) would be required. If Schedule 40 pipe were used, a nominal diameter of 2 in. (50 mm) $Z = 0.56$ in.^{3} (9.2 cm^3) would be required. Other steel shapes such as struts that meet or exceed the predetermined Z value of 0.51 in.^{3} (8.4 cm^3) are also acceptable in accordance with 17.3.2.

To determine acceptable trapeze members where the fire protection piping is not supported at the mid-point of the span, the effective length would be calculated. Using the same conditions as specified in the accompanying exhibit, assume that the 4 in. (100 mm) Schedule 10 pipe is to be located 1 ft (0.3 m) from one end of the span.

Then, using the following formula, the equivalent length can be determined to be 3.33 ft or 3 ft. 4 in. (1.02 m):

$$L = \frac{(4)(1\text{ft})(5\text{ ft})}{1\text{ft}+5\text{ ft}} = \frac{20\text{ ft}^2}{6\text{ ft}} = 3.33\text{ ft}$$

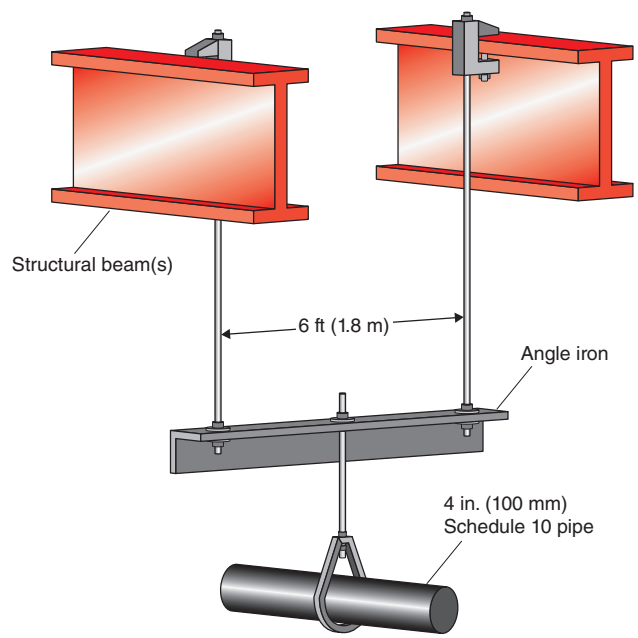

Trapeze Installation. (Courtesy of Stephan Laforest)

Table 17.3.1(a) provides the required section modulus in 0.5 ft (0.15 m) increments of trapeze length, so the equivalent span was rounded up to 3.5 ft (1.1 m).

Referring to Table 17.3.1(a), the section modulus needed for 4 in. (100 mm) Schedule 10 pipe (the top values in the table) with a 3.5 ft (1.05 m) span is 0.30 in.^{3}. As Table 17.3.1(b) indicates, the minimum size for a trapeze bar could be either 2 in. (50 mm) Schedule 10 or 1½ inch Schedule 40 pipe or a 2 in. × 2 in. × 5/16 in. (50 mm x 50 mm x 8 mm) angle iron.

EDUFIRE.IR

Where multiple mains are to be supported or multiple trapeze hangers are provided in parallel, the required or available section modulus can be added. The table values are based on the trapeze being a single continuous member.

Trapeze members should not consist of multiple pieces of pipe or angle joined together. All the information built into the section modulus tables and guidelines for this type of support assume that the trapeze is a single component.

17.3.1 For trapeze hangers, the minimum size of steel angle or pipe span between structural members shall be such that the section modulus required in Table 17.3.1(a) does not exceed the available section modulus of the trapeze member from Table 17.3.1(b) or Table 17.3.1(c).

The values provided in Table 17.3.1(a) are calculated based on a single member as the trapeze. The accompanying Closer Look feature illustrates the intended use of Table 17.3.1(a) and Table 17.3.1(b).

TABLE 17.3.1(a) *Section Modulus Required for Trapeze Members (in.^{3})*

	Nominal Diameter of Pipe Being Supported – Schedule 10 Steel											
Span (ft)	***1***	***1.25***	***1.5***	***2***	***2.5***	***3***	***3.5***	***4***	***5***	***6***	***8***	***10***
1.5	0.08	0.08	0.09	0.09	0.10	0.11	0.12	0.13	0.15	0.18	0.26	0.34
2.0	0.11	0.11	0.12	0.13	0.14	0.15	0.16	0.17	0.20	0.24	0.34	0.45
2.5	0.14	0.14	0.15	0.16	0.18	0.21	0.23	0.25	0.30	0.36	0.50	0.69
3.0	0.16	0.17	0.18	0.19	0.20	0.22	0.24	0.26	0.31	0.36	0.51	0.67
3.5	0.19	0.20	0.21	0.22	0.24	0.26	0.28	0.30	0.36	0.42	0.60	0.78
4.0	0.22	0.22	0.24	0.25	0.27	0.30	0.32	0.34	0.41	0.48	0.68	0.89
4.5	0.24	0.25	0.27	0.28	0.30	0.33	0.36	0.38	0.46	0.54	0.77	1.01
5.0	0.27	0.28	0.30	0.31	0.34	0.37	0.40	0.43	0.51	0.60	0.85	1.12
5.5	0.30	0.31	0.33	0.34	0.37	0.41	0.44	0.47	0.56	0.66	0.94	1.23
6.0	0.33	0.34	0.35	0.38	0.41	0.44	0.48	0.51	0.61	0.71	1.02	1.34
6.5	0.35	0.36	0.38	0.41	0.44	0.48	0.52	0.56	0.66	0.77	1.11	1.45
7.0	0.38	0.39	0.41	0.44	0.47	0.52	0.56	0.60	0.71	0.83	1.19	1.56
7.5	0.41	0.42	0.44	0.47	0.51	0.55	0.60	0.64	0.76	0.89	1.28	1.68
8.0	0.43	0.45	0.47	0.50	0.54	0.59	0.63	0.68	0.82	0.95	1.36	1.79
8.5	0.46	0.48	0.50	0.53	0.58	0.63	0.67	0.73	0.87	1.01	1.45	1.90
9.0	0.49	0.50	0.53	0.56	0.61	0.66	0.71	0.77	0.92	1.07	1.53	2.01
9.5	0.52	0.53	0.56	0.60	0.64	0.70	0.75	0.81	0.97	1.13	1.62	2.12
10.0	0.54	0.56	0.59	0.63	0.68	0.74	0.79	0.85	1.02	1.19	1.70	2.23
10.5	0.57	0.59	0.62	0.66	0.71	0.78	0.83	0.90	1.07	1.25	1.79	2.35
11.0	0.60	0.62	0.65	0.69	0.74	0.81	0.87	0.94	1.12	1.31	1.87	2.46
11.5	0.63	0.64	0.68	0.72	0.78	0.85	0.91	0.98	1.17	1.37	1.96	2.57
12.0	0.65	0.67	0.71	0.75	0.81	0.89	0.95	1.02	1.22	1.43	2.04	2.68
12.5	0.68	0.70	0.74	0.78	0.85	0.92	0.99	1.07	1.27	1.49	2.13	2.79
13.0	0.71	0.73	0.77	0.81	0.88	0.96	1.03	1.11	1.33	1.55	2.21	2.90
13.5	0.73	0.76	0.80	0.85	0.91	1.00	1.07	1.15	1.38	1.61	2.30	3.02
14.0	0.76	0.78	0.83	0.88	0.95	1.03	1.11	1.20	1.43	1.67	2.38	3.13

(Continues)

EDUFIRE.IR

TABLE 17.3.1(a) Continued

Nominal Diameter of Pipe Being Supported – Schedule 10 Steel												
Span (ft)	***1***	***1.25***	***1.5***	***2***	***2.5***	***3***	***3.5***	***4***	***5***	***6***	***8***	***10***
14.5	0.79	0.81	0.86	0.91	0.98	1.07	1.15	1.24	1.48	1.73	2.47	3.24
15.0	0.82	0.84	0.89	0.94	1.02	1.11	1.19	1.28	1.53	1.79	2.56	3.35
15.5	0.84	0.87	0.92	0.97	1.05	1.14	1.23	1.32	1.58	1.85	2.64	3.46
16.0	0.87	0.90	0.95	1.00	1.08	1.18	1.27	1.37	1.63	1.91	2.73	3.58

Nominal Diameter of Pipe Being Supported – Schedule 40 Steel												
Span (ft)	***1***	***1.25***	***1.5***	***2***	***2.5***	***3***	***3.5***	***4***	***5***	***6***	***8***	***10***
1.5	0.08	0.09	0.09	0.1	0.11	0.12	0.14	0.15	0.18	0.22	0.30	0.41
2.0	0.11	0.11	0.12	0.13	0.15	0.16	0.18	0.20	0.24	0.29	0.40	0.55
2.5	0.14	0.14	0.15	0.16	0.17	0.18	0.20	0.21	0.25	0.30	0.43	0.56
3.0	0.16	0.17	0.18	0.20	0.22	0.25	0.27	0.30	0.36	0.43	0.60	0.82
3.5	0.19	0.20	0.21	0.23	0.26	0.29	0.32	0.35	0.42	0.51	0.70	0.96
4.0	0.22	0.23	0.24	0.26	0.29	0.33	0.36	0.40	0.48	0.58	0.80	1.10
4.5	0.25	0.26	0.27	0.29	0.33	0.37	0.41	0.45	0.54	0.65	0.90	1.23
5.0	0.27	0.29	0.30	0.33	0.37	0.41	0.45	0.49	0.60	0.72	1.00	1.37
5.5	0.30	0.31	0.33	0.36	0.40	0.45	0.50	0.54	0.66	0.79	1.10	1.51
6.0	0.33	0.34	0.36	0.39	0.44	0.49	0.54	0.59	0.72	0.87	1.20	1.64
6.5	0.36	0.37	0.40	0.42	0.48	0.54	0.59	0.64	0.78	0.94	1.31	1.78
7.0	0.38	0.40	0.43	0.46	0.52	0.58	0.63	0.69	0.84	1.01	1.41	1.92
7.5	0.41	0.43	0.46	0.49	0.55	0.62	0.68	0.74	0.90	1.08	1.51	2.06
8.0	0.44	0.46	0.49	0.52	0.59	0.66	0.72	0.79	0.96	1.16	1.61	2.19
8.5	0.47	0.48	0.52	0.56	0.63	0.70	0.77	0.84	1.02	1.23	1.71	2.33
9.0	0.49	0.51	0.55	0.59	0.66	0.74	0.81	0.89	1.08	1.30	1.81	2.47
9.5	0.52	0.54	0.58	0.62	0.70	0.78	0.86	0.94	1.14	1.37	1.91	2.60
10.0	0.55	0.57	0.61	0.65	0.74	0.82	0.90	0.99	1.20	1.45	2.01	2.74
10.5	0.58	0.60	0.64	0.69	0.77	0.86	0.95	1.04	1.26	1.52	2.11	2.88
11.0	0.60	0.63	0.67	0.72	0.81	0.91	0.99	1.09	1.32	1.59	2.21	3.01
11.5	0.63	0.66	0.70	0.75	0.85	0.95	1.04	1.14	1.38	1.66	2.31	3.15
12.0	0.66	0.68	0.73	0.78	0.88	0.99	1.08	1.19	1.44	1.73	2.41	3.29
12.5	0.69	0.71	0.76	0.82	0.92	1.03	1.13	1.24	1.5	1.81	2.51	3.43
13.0	0.71	0.74	0.79	0.85	0.96	1.07	1.17	1.29	1.56	1.88	2.61	3.56
13.5	0.74	0.77	0.82	0.88	0.99	1.11	1.22	1.34	1.62	1.95	2.71	3.70
14.0	0.77	0.80	0.85	0.91	1.03	1.15	1.26	1.39	1.68	2.02	2.81	3.84
14.5	0.80	0.83	0.88	0.95	1.07	1.19	1.31	1.43	1.74	2.1	2.91	3.97
15.0	0.82	0.86	0.91	0.98	1.10	1.24	1.35	1.48	1.8	2.17	3.01	4.11
15.5	0.85	0.88	0.94	1.01	1.14	1.28	1.4	1.53	1.86	2.24	3.11	4.25
16.0	0.88	0.91	0.97	1.05	1.18	1.32	1.44	1.58	1.92	2.31	3.21	4.39

For SI units, 1 in. = 25.4 mm; 1 ft = 0.3048 m.

Note: The table is based on a maximum bending stress of 15 ksi (103.4 MPa) and a midspan concentrated load from 15 ft (4.6 m) of water-filled pipe, plus 250 lb (114 kg).

EDUFIRE.IR

TABLE 17.3.1(b) *Available Section Modulus of Common Trapeze Hangers (in.³)*

Pipe in.	Pipe mm	Modulus (in.³)	Angles (in.)	Modulus (in.³)
Schedule 10				
1	25	0.12	1½ × 1½ × 3/16	0.10
1¼	32	0.19	2 × 2 × ⅛	0.13
1½	40	0.26	2 × 1½ × 3/16	0.18
2	50	0.42	2 × 2 × 3/16	0.19
2½	65	0.69	2 × 2 × ¼	0.25
3	80	1.04	2½ × 1½ × 3/16	0.28
3½	90	1.38	2½ × 2 × 3/16	0.29
4	100	1.76	2 × 2 × 5/16	0.30
5	125	3.03	2½ × 2½ × 3/16	0.30
6	150	4.35	2 × 2 × ⅜	0.35
			2½ × 2½ × ¼	0.39
			3 × 2 × 3/16	0.41
Schedule 40				
1	25	0.13	3 × 2½ × 3/16	0.43
1¼	32	0.23	3 × 3 × 3/16	0.44
1½	40	0.33	2½ × 2½ × 5/16	0.48
2	50	0.56	3 × 2 × ¼	0.54
2½	65	1.06	2½ × 2 × ⅜	0.55
3	80	1.72	2½ × 2½ × ⅜	0.57
3½	90	2.39	3 × 3 × ¼	0.58
4	100	3.21	3 × 3 × 5/16	0.71
5	125	5.45	2½ × 2½ × ½	0.72
6	150	8.50	3½ × 2½ × ¼	0.75
			3 × 2½ × ⅜	0.81
			3 × 3 × ⅜	0.83
			3½ × 2½ × 5/16	0.93
			3 × 3 × 7/16	0.95
			4 × 4 × ¼	1.05
			3 × 3 × ½	1.07
			4 × 3 × 5/16	1.23
			4 × 4 × 5/16	1.29
			4 × 3 × ⅜	1.46
			4 ×4 × ⅜	1.52
			5 × 3½ × 5/16	1.94
			4 × 4 × ½	1.97
			4 × 4 × ⅝	2.40
			4 × 4 × ¾	2.81
			6 × 4 × ⅜	3.32
			6 × 4 × ½	4.33
			6 × 4 × ¾	6.25
			6 × 6 × 1	8.57

TABLE 17.3.1(c) *Available Section Modulus of Common Trapeze Hangers (cm³)*

Pipe in.	Pipe mm	Modulus (cm³)	Angles (mm)	Modulus (cm³)
Schedule 10				
1	25	1.97	40 × 40 × 5	1.64
1¼	32	3.11	50 × 50 × 3	2.13
1½	40	4.26	50 × 40 × 5	2.95
2	50	6.88	50 × 50 × 5	3.11
2½	65	11.3	50 × 50 × 6	4.10
3	80	17.0	65 × 40 × 5	4.59
3½	90	22.6	65 × 50 × 5	4.75
4	100	28.8	50 × 50 × 8	4.92
5	125	49.7	65 × 65 × 5	4.92
6	150	71.3	50 × 50 × 10	5.74
			65 × 65 × 6	6.39
			80 × 50 × 5	6.72
Schedule 40				
1	25	2.1	80 × 65 × 10	7.05
1¼	32	3.8	3 × 3 × 3/16	7.21
1½	40	5.4	65 × 65 × 8	7.87
2	50	9.2	3 × 2 × ¼	8.85
2½	65	17.4	65 × 50 × 10	9.01
3	80	28.2	65 × 65 × 10	9.34
3½	90	39.2	80 × 80 × 6	9.50
4	100	52.6	80 × 80 × 8	11.6
5	125	89.3	65 × 65 × 15	11.8
6	150	139.3	90 × 65 × 6	12.3
			80 × 65 × 10	13.3
			80 × 80 × 10	13.6
			90 × 65 × 8	15.2
			80 × 80 × 11	15.6
			100 × 100 × 6	17.2
			80 × 80 × 15	17.5
			100 × 80 × 8	20.2
			100 × 100 × 8	21.1
			100 × 80 × 10	23.9
			100 × 100 × 10	24.9
			125 × 90 × 8	31.8
			100 × 100 × 16	32.3
			100 × 100 × 8	39.3
			100 × 100 × 20	46.0
			150 × 100 × 10	54.4
			150 × 100 × 15	71.0
			150 × 100 × 20	102
			150 × 150 × 25	140

EDUFIRE.IR

A trapeze hanger, as shown in Exhibit 17.7, must be capable of supporting the weight of the water-filled piping plus 250 lb (115 kg). Other types of hangers generally are required to be able to support five times the weight of the water-filled piping plus 250 lb (115 kg). The safety factor of five is used in the traditional listing requirements for hangers and is also found in the performance-based criteria of 17.1.2(1). The requirement for trapeze hangers matches the requirement for the building structure found in 17.4.1.3.1.

The section moduli given in Table 17.3.1(a) are based on the assumption that the pipe to be supported will be located in the exact center of the span and will, therefore, put maximum stress on the trapeze bar. The nearer the load is to one side of the span, the less stress it exerts on the trapeze member. If the load is sufficiently off center, a trapeze bar of smaller size could possibly be used to support it. This is where the effective length formula would be applied.

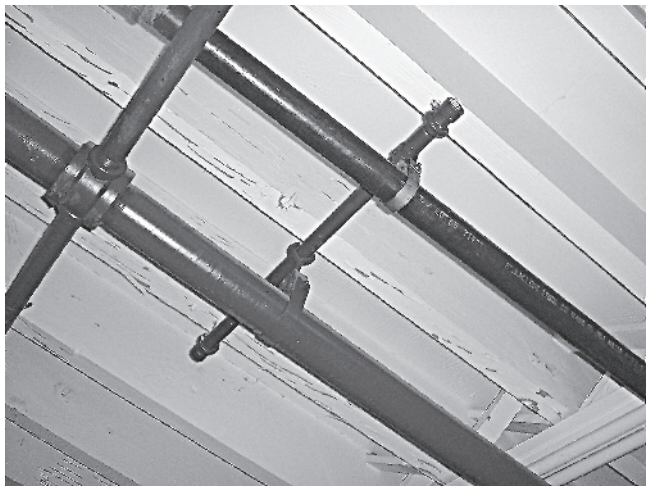

EXHIBIT 17.7 *Trapeze Hanger. (Courtesy of the National Fire Sprinkler Association)*

17.3.2 Any other sizes or shapes giving equal or greater section modulus shall be acceptable.

Where materials other than steel are proposed for use as trapeze members, an engineering analysis must be completed to determine the material's capability. Comparable beam strength and appropriate fire endurance characteristics are required.

NFPA 13 does not specifically permit the use of wood trapeze members, and 17.2.4.5 prohibits the use of nails as fasteners. However, the building designer always has the option of allowing a modification of the building structure to provide an additional building element to be used at a specific point of attachment for a hanger. The manner in which additional building elements are added to the building structure must be acceptable to the design professional responsible for the building and must meet the requirements of 17.4.1.3.1.

FAQ [17.3.4]

Is it acceptable to allow trapeze members to be placed on the structural members as a means of securement?

When securing a trapeze member, it is not acceptable to simply place it between bar joists or other successive structural members and use it for a suspended load. The bottom chord of a bar joist cannot support the load of the sprinkler system; it is intended to provide stability for the bar joist and is not considered a structural member per se. The trapeze must be secured to the structure with bolts or other fasteners that meet the requirements of Chapter 17.

17.3.3 All angles shall be installed with the longer leg vertical.

17.3.4 The trapeze member shall be secured to prevent slippage.

17.3.5* All components of each hanger assembly that attach to a trapeze member shall conform to 17.1.6 and be sized to support the suspended sprinkler pipe.

For the selection of the proper material for a trapeze hanger, it is not the intent of the standard to require that the pipe or angle iron used as a trapeze component be listed, only that the pipe or angle iron meet or exceed the required section modulus as indicated in Section 17.3. However, all other components that attach to the trapeze member are required to be listed or to be generic components, such as bolts, nuts, and washers, as addressed in A.17.1.6.2.

EDUFIRE.IR

Three hanging points are associated with a trapeze hanger, consisting of both ends of the trapeze plus the suspended load. Each of those points of hanging has two potential points of attachment, one at the top and one at the bottom. Subsection 17.3.5 requires that all three hanger assemblies and hanger components associated with all points of attachment be sized on the basis of the suspended load.

One of the most common mistakes with pipe trapezes is the use of an incorrect ring, rod, and/or attachment size. All the components of the trapeze must be sized for the greatest load. For example, if an 8 in. (200 mm) main is being supported from a 4 in. (100 mm) pipe trapeze, care must be given to make sure all trapeze components are the correct size for 8 in. (200 mm) pipe loads. Starting at the top of the assembly, the connection to the building using C-clamps, lag bolts, or other components must be sized for the 8 in. (200 mm) main and not for the 4 in. (100 mm) trapeze. Also, all hanger rods within the trapeze assembly must be ½ in. (12 mm) diameter as required for 8 in. (200 mm) pipe and not the standard ⅜ in. (10 mm) rod size for a 4 in. (100 mm) pipe.

To further complicate the situation, a standard 4 in. (100 mm) ring has a ⅜ in. (10 mm) nut for a ⅜ in. (10 mm) rod, and a 4 in. (100 mm) ring is not listed to support the weight of 8 in. (200 mm) pipe. For that reason, a standard 4 in. (100 mm) ring cannot be used to hang the trapeze or inverted to hang the 8 in. (200 mm) pipe, and 8 in. (200 mm) rings cannot be used to hang a 4 in. (100 mm) trapeze because the rings will distort around the too small pipe. For such situations, hanger manufacturers have specially listed heavy-duty rings with oversized knurl nuts to be used for just that purpose. Another solution is to use connections to the trapeze that do not use rings.

A.17.3.5 Hanger components are sized based upon an ultimate strength limit of 5 times the weight of water-filled pipe plus 250 lb (115 kg). The section moduli used to size the trapeze member are based on a maximum bending stress, which provides an acceptable level of safety that is comparable to that of the other hanger components.

17.3.6 The ring, strap, or clevis installed on a pipe trapeze shall be manufactured to fit the pipe size of the trapeze member.

Typically, the suspended sprinkler pipe is larger in diameter than a pipe section used as the trapeze member. A concern is that the use of swivel rings and similar components sized for the larger pipe would produce incompatibility problems when used on the smaller diameter trapeze, such as elongation over time. However, hanger manufacturers make special products that are sized for use with the smaller pipe but that have the strength capacity needed for the larger pipe, and such products are appropriate for use not only at the top of the hanger assembly holding the suspended pipe but for both ends of the trapeze member as well.

17.3.7 Holes for bolts or rods shall not exceed 1⁄16 in. (1.6 mm) greater than the diameter of the bolt or rod.

17.3.8 Bolts and rods shall be provided with flat washers and nuts.

17.3.9 Where angles are used for trapeze hangers and slotted holes are used, the slotted holes shall meet all of the following:

(1) The length of each slotted hole shall not exceed 3 in. (75 mm).
(2) The width of the slotted hole shall not exceed 1⁄16 in. (1.6 mm) greater than the bolt or rod diameter.
(3) The minimum distance between slotted holes shall be 3 in. (75 mm) edge to edge.
(4) The minimum distance from the end of the angle to the edge of the slotted hole shall be 3 in. (75 mm).
(5) The number of slots shall be limited to three per section of angle.
(6) The washer(s) required by 17.3.8 shall have a minimum thickness of one-half the thickness of the angle.
(7) Washers and nuts required by 17.3.8 shall be provided on both the top and bottom of the angle.

EDUFIRE.IR

Slots in the angle iron are a common way to attach the hangers to the angle iron trapeze member. This allows for flexibility in working with the structure and nominal variations that could exist. However, removing material from the angle iron to create the slot will reduce the load capacity of the member. These guidelines are provided to restrict the size and number of slots in an angle iron.

DESIGNER'S CORNER [17.3]

Should the hangers supporting the 3 in. (80 mm) Schedule 40 steel pipe trapeze member shown in the illustration be sized to support the 3 in. (80 mm) Schedule 40 trapeze member or the 6 in. (150 mm) Schedule 10 sprinkler main?

If the "cookbook" approach to using trapeze hangers as laid out in Section 17.3 is used, the hangers supporting the trapeze member should be individually sized to support the 6 in. (150 mm) sprinkler main. Since the hanger components will not be physically attached to the 6 in. (150 mm) pipe, a component is needed from a hanger manufacturer to connect to the 3 in. (80 mm) trapeze member that will support the load of the 6 in. (150 mm) (water-filled) main. Manufacturers are aware of this requirement and make correct connections for these situations.

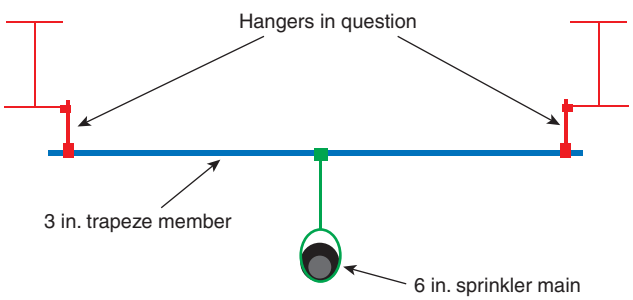

Schedule 40 Trapeze Hanger.

Confusion on this issue stems from previous editions of NFPA 13, in which the rules were not so clear. With a lack of guidance from NFPA 13 on the subject, many designers and installers would use hangers sufficient to support the load of the 3 in. (80 mm) trapeze member in the example. Since there were two such hangers for each trapeze member, they calculated that the total capacity of the trapeze would still be sufficient to carry the load of the sprinkler main, but this was done as an extension of the building requirements for only the weight of the system piping plus 250 lb (115 kg). When the sprinkler main is much closer to one of the trapeze supports than to the other, the two hangers for the trapeze member might not be able to support the load of the sprinkler main if they are sized for sharing the load between the two supports of the trapeze.

To fix this situation, the Technical Committee on Hanging and Bracing changed the rules in the 2007 edition to require that the hangers for the trapeze be sized individually to support the sprinkler main. This approach is the most conservative and will work for all circumstances, as long as connections to the trapeze member will support the greater load, which they now do.

Under the performance-based option of 17.1.2, professional engineers could still design a trapeze with hangers that are sized to support only the trapeze member if they perform the calculations to prove that the hanger assembly provides adequate support overall to the sprinkler main. This calculation would not be difficult for a structural engineer and would still comply with NFPA 13.

17.4* Installation of Pipe Hangers.

A.17.4 To enhance permanence, proper hanger installation is important. Installation procedures should meet industry standards of practice and craftsmanship. For example, hanger assemblies are straight, perpendicular to the pipe, uniformly located, and snug to the structure with fasteners fully engaged.

17.4.1 General.

17.4.1.1 Ceiling Sheathing.

FAQ [17.4.1.1.2]

Are toggle hangers permitted to be utilized in gypsum wallboard ceilings?

Toggle hangers are not permitted for use with gypsum wallboard or other less substantial types of ceiling materials.

17.4.1.1.1* Unless the requirements of 17.4.1.1.2 are met, sprinkler piping shall be supported independently of the ceiling sheathing.

A.17.4.1.1.1 Fasteners used to support sprinkler system piping should not be attached to ceilings of gypsum or other similar soft material.

17.4.1.1.2 Toggle hangers shall be permitted only for the support of pipe 1½ in. (40 mm) or smaller in size under ceilings of hollow tile or metal lath and plaster.

EDUFIRE.IR

Sprinkler piping must be supported from the building structure, not ceiling sheathing. An exception is made for 1½ in. (40 mm) or smaller piping under ceilings of hollow tile or metal lath and plaster, which can be supported with toggle hangers. (See Exhibit 17.8.)

17.4.1.2 Storage Racks. Where sprinkler piping is installed in storage racks, piping shall be supported from the storage rack structure or building in accordance with all applicable provisions of Section17.4 and Chapter 18.

The storage rack structure or any storage structure that is supporting sprinkler pipe must meet the same requirements as those laid out for a building. The structure must be capable of meeting the requirements of 17.4.1.3.1.

17.4.1.3* Building Structure.

A.17.4.1.3 The method used to attach the hanger to the structure and the load placed on the hanger should take into account any limits imposed by the structure. Design manual information for pre-engineered structures or other specialty construction materials should be consulted, if appropriate.

System mains hung to a single beam, truss, or purlin can affect the structural integrity of the building by introducing excessive loads not anticipated in the building design. Also, special conditions such as collateral and concentrated load limits, type or method of attachment to the structural components, or location of attachment to the structural components might need to be observed when hanging system piping in pre-engineered metal buildings or buildings using other specialty structural components such as composite wood joists or combination wood and tubular metal joists.

The building structure is only required to handle the weight of the water-filled pipe and components, while the hangers are required to handle 5 times the weight of the water-filled pipe. In addition, a safety factor load of 250 lb (115 kg) is added in both cases. The difference in requirements has to do with the different ways that loads are calculated and safety factors are applied.

When sprinkler system loads are given to structural engineers for calculation of the structural elements in the building, they apply their own safety factors in order to determine what structural members and hanging locations will be acceptable.

In contrast, when sprinkler system loads are calculated for the hangers themselves, there is no explicit safety factor, so NFPA 13 mandates a safety factor of 5 times the weight of the pipe.

17.4.1.3.1 Sprinkler piping shall be substantially supported from the building structure, which must support the added load of the water-filled pipe plus 250 lb (115 kg) applied at the point of hanging, except where permitted by 17.4.1.1.2, 17.4.1.3.3, and 17.4.1.4.1.

Each individual point where the hanger is attached to the structure must be able to support the weight of the water-filled pipe plus 250 lb (115 kg). This requirement does not intend to add 250 lb (115 kg) concurrently for each hanger when the minimum strength of the building structure is being determined. Just because a fastener has a listing to be attached to a certain minimum size building element, it does not automatically mean that the building element can support the weight of the water-filled pipe plus 250 lb (115 kg). As mentioned in the commentary following 17.1.2, the 250 lb (115 kg) load represents the extra stress imposed by system installation, future construction activities, and physical impact from equipment. It is a temporary point load applied at any hanger.

The safety factor for the structure is different from the safety factor for the hanger because it includes the actual weight of the water-filled pipe, not five times its weight. The hangers are held to a higher load, and that is the baseline set by the Technical Committee on Hanging and Bracing. The building structure is subject to its own safety factors from applicable codes and standards; 17.4.1.3.1 just relays what load needs to be considered.

17.4.1.3.2 Trapeze hangers shall be used where necessary to transfer loads to appropriate structural members.

17.4.1.3.3* Flexible Sprinkler Hose Fittings.

A.17.4.1.3.3 Examples of areas of use include cleanrooms, suspended ceilings, and exhaust ducts.

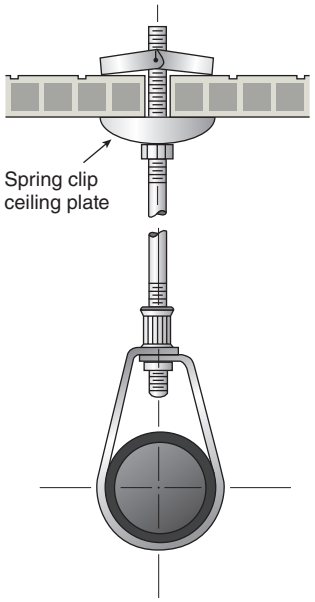

EXHIBIT 17.8 Toggle Hanger for Support of 1½ in. (40 mm) or Smaller Pipe Under Hollow Tile or Metal Lath and Plaster.

EDUFIRE.IR

17.4.1.3.3.1 Listed flexible sprinkler hose fittings and their anchoring components intended for use in installations connecting the sprinkler system piping to sprinklers shall be installed in accordance with the requirements of the listing, including any installation instructions.

17.4.1.3.3.2 When installed and supported by suspended ceilings, the ceiling shall meet ASTM C635/C635M, *Standard Specification for the Manufacture, Performance, and Testing of Metal Suspension Systems for Acoustical Tile and Lay-In Panel Ceilings*, and shall be installed in accordance with ASTM C636/C636M, *Standard Practice for Installation of Metal Ceiling Suspension Systems for Acoustical Tile and Lay-In Panels*.

Flexible sprinkler hose fittings must be installed in ceilings meeting the requirements of ASTM C635/C635M, *Standard Specification for the Manufacture, Performance, and Testing of Metal Suspension Systems for Acoustical Tile and Lay-In Panel Ceilings,* and ASTM C636/C636M, *Standard Practice for Installation of Metal Ceiling Suspension Systems for Acoustical Tile and Lay-In Panels*. The bracket for the assembly is listed based on loads that the bracket can carry when it is connected to the specified ceiling grid. Flexible hose fittings should not be installed in ceilings where compliance with ASTM C635/C635M and ASTM C636/C636M cannot be confirmed.

17.4.1.3.3.3* Where flexible sprinkler hose fittings exceed 6 ft (1.8 m) in length and are supported by a suspended ceiling in accordance with 17.4.1.3.3.2, a hanger(s) attached to the structure shall be required to ensure that the maximum unsupported length does not exceed 6 ft (1.8 m).

Flexible sprinkler hose fittings must be installed in accordance with their specific listing requirements and manufacturers' instructions, including any limits on the number of bends allowed and the minimum bend radius.

A.17.4.1.3.3.3 The committee evaluation of flexible sprinkler hose fittings supported by suspended ceilings was based on information provided to the committee showed that the maximum load shed to the suspended ceiling by the flexible hose fitting was approximately 6 lb (2.7 kg) and that a suspended ceiling meeting ASTM C635, *Standard Specification for the Manufacture, Performance, and Testing of Metal Suspension Systems of Acoustical Tile and Lay-In Panel Ceilings*, and installed in accordance with ASTM C636, *Standard Practice for Installation of Metal Ceiling Suspension Systems for Acoustical Tile and Lay-In Panels*, can substantially support that load. In addition, the supporting material showed that the flexible hose connection can be attached to the suspended ceilings because it allows the necessary deflections under seismic conditions.

17.4.1.3.3.4* Where flexible sprinkler hose fittings are used to connect sprinklers to branch lines in suspended ceilings, a label limiting relocation of the sprinkler shall be provided on the anchoring component.

Where flexible sprinkler hose fittings allow sprinklers to be adjusted and relocated, adjustments and relocations not made by qualified individuals could violate requirements such as those for maximum or minimum sprinkler spacing or obstruction avoidance. For that reason, a label warning against relocation is part of the device requirements. To additionally discourage relocation, the length of flexible drops should be kept to the minimum required for adequate installation and proper performance. See Exhibit 17.9 for examples of flexible sprinkler hose connections.

It also should be recognized that, where earthquake protection is required, building codes generally require higher safety factors for fire sprinkler systems than for suspended ceilings. Suspended ceilings that are providing support for fire sprinklers connected to flexible sprinkler hose fittings must be constructed to meet the specified requirements of the ASTM standards so that it does not affect the performance of the sprinkler system. As discussed in A.17.4.1.3.3.3, the Technical Committee on Hanging and Bracing reviewed submitted material relating to the performance of flexible sprinkler hose fittings under seismic conditions, including "Seismic Qualification Tests of Sprinkler Systems," from the New York Department of Civil, Structural and Environmental Engineering. The performance under seismic testing was acceptable.

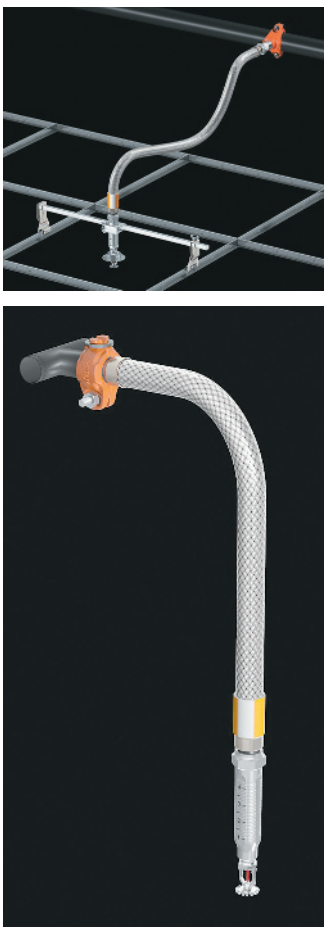

EXHIBIT 17.9 *Examples of Flexible Sprinkler Hose Fittings. (Courtesy of Victaulic®)*

EDUFIRE.IR

A.17.4.1.3.3.4 An example of language for the label is as follows:

CAUTION: DO NOT REMOVE THIS LABEL.

Relocation of this device should only be performed by qualified and/or licensed individuals that are aware of the original system design criteria, hydraulic criteria, sprinkler listing parameters, and knowledge of the state and local codes including NFPA 13 installation standards. Relocation of the device without this knowledge could adversely affect the performance of this fire protection and life safety system.

17.4.1.4 Metal Deck.

The NFPA allowance for attachment to decking material applies only to very small diameter pipe using through-bolts. With the exception of 17.4.1.4 and that for toggle hangers in 17.4.1.1.2, hanger attachment must be made to the building structure.

Hanger manufacturers have created specialty products with listings to attach to steel deck of varying gauge. It is acceptable to use those listed products, but consideration must be given to more than just the steel to which the fastener is attached. While locally the fastener might be in compliance with the minimum deck gauge requirements of the hanger manufacturer, the deck itself must still meet the requirements of 17.4.1.3.1. For example, a ceiling flange with a specific listing is to be screwed to steel metal deck as thin as 22 gauge (0.78 mm). While connection of the ceiling flange to the 22 gauge (0.78 mm) deck might be acceptable, the steel deck's span must also be checked to verify that it meets the requirements of 17.4.1.3.1 for the building. While it is important to determine that the ceiling flange does not pull out of the deck, the deck must also be checked to ensure it will support the water-filled pipe plus 250 lb (115 kg) as it spans between supports.

17.4.1.4.1* Branch line hangers attached to metal deck shall be permitted only for the support of pipe 1 in. (25 mm) or smaller in size, by drilling or punching the vertical portion of the metal deck and using through bolts.

A.17.4.1.4.1 Piping in excess of 1 in. (25 mm) shall be permitted to be supported from a metal deck if the method of attachment and ability of the deck to support loads as specified in 17.4.1.3.1 are approved by a registered professional engineer.

17.4.1.4.2 The distance from the bottom of the bolt hole to the bottom of the vertical member shall be not less than 3/8 in. (10 mm).

17.4.1.5 Where sprinkler piping is installed below ductwork, piping shall be supported from the building structure or from the ductwork supports, provided such supports are capable of handling both the load of the ductwork and the load specified in 17.4.1.3.1.

If the ductwork supports are not capable of supporting both the ductwork load and the weight of the water-filled pipe plus 250 lb (115 kg) as originally specified, the ductwork supports must be increased in size or capacity, or another method of support must be used. Additionally, where the ductwork is to be supported by the building structure rather than the ductwork supports, the sprinkler piping hanger assembly is not to penetrate the ductwork, as shown in Exhibit 17.10.

17.4.2* Maximum Distance Between Hangers.

A.17.4.2 Where copper tube is to be installed in moist areas or other environments conducive to galvanic corrosion, copper hangers or ferrous hangers with an insulating material should be used.

17.4.2.1 The maximum distance between hangers shall not exceed that specified in Table 17.4.2.1(a) or Table 17.4.2.1(b), except where the provisions of 17.4.4 apply.

EDUFIRE.IR

EXHIBIT 17.10 Hanger Assembly Improperly Penetrating Ductwork

TABLE 17.4.2.1(a) *Maximum Distance Between Hangers (ft-in.)*

	Nominal Pipe Size (in.)											
	¾	*1*	*1¼*	*1½*	*2*	*2½*	*3*	*3½*	*4*	*5*	*6*	*8*
Steel pipe except threaded lightwall	NA	12-0	12-0	15-0	15-0	15-0	15-0	15-0	15-0	15-0	15-0	15-0
Threaded lightwall steel pipe	NA	12-0	12-0	12-0	12-0	12-0	12-0	NA	NA	NA	NA	NA
Copper tube	8-0	8-0	10-0	10-0	12-0	12-0	12-0	15-0	15-0	15-0	15-0	15-0
CPVC	5-6	6-0	6-6	7-0	8-0	9-0	10-0	NA	NA	NA	NA	NA
Ductile-iron pipe	NA	NA	NA	NA	NA	NA	15-0	NA	15-0	NA	15-0	15-0

NA: Not applicable.

TABLE 17.4.2.1(b) *Maximum Distance Between Hangers (m)*

	Nominal Pipe Size (mm)											
	20	*25*	*32*	*40*	*50*	*65*	*80*	*90*	*100*	*125*	*150*	*200*
Steel pipe except threaded lightwall	NA	3.7	3.7	4.6	4.6	4.6	4.6	4.6	4.6	4.6	4.6	4.6
Threaded lightwall steel pipe	NA	3.7	3.7	3.7	3.7	3.7	3.7	NA	NA	NA	NA	NA
Copper tube	2.4	2.4	3.0	3.0	3.7	3.7	3.7	4.6	4.6	4.6	4.6	4.6
CPVC	1.7	1.8	2.0	2.1	2.4	2.7	3.0	NA	NA	NA	NA	NA
Ductile-iron pipe	NA	NA	NA	NA	NA	NA	4.6	NA	4.6	NA	4.6	4.6

NA: Not applicable.

The values given in Table 17.4.2.1(a) and Table 17.4.2.1(b) are based on the use of materials and component sizes given in Section 17.2 and the beam strength of the system piping. Where pipe hangers are designed in accordance with 17.1.2, the values given in Table 17.4.2.1(a) and Table 17.4.2.1(b) cannot be modified. Because of the reduction in pipe wall thickness when thin-wall pipe is threaded, hangers are required to be spaced closer together.

17.4.2.2 The maximum distance between hangers for listed nonmetallic pipe shall be modified as specified in the individual product listings.

Because of the unique characteristics of some types of fittings, certain manufacturers recommend hanger spacings less than the maximums given in Table 17.4.2.1(a) and Table 17.4.2.1(b). In such circumstances, the manufacturer's recommendations must be followed.

EDUFIRE.IR

17.4.3 Location of Hangers on Branch Lines.

17.4.3.1 Subsection 17.4.3 shall apply to the support of steel pipe or copper tube as specified in 7.3.1 and subject to the provisions of 17.4.2.

17.4.3.2* Minimum Number of Hangers.

A.17.4.3.2 The hangers required by Chapter 17 are intended to accommodate general loading such as check valves, control valves, or dry or deluge valves. Where additional equipment such as backflow prevention assemblies and other devices with substantial loads are added, additional hangers should be considered.

17.4.3.2.1 Unless the requirements of 17.4.3.2.2 through 17.4.3.2.5 are met, there shall be not less than one hanger for each section of pipe.

17.4.3.2.2* Unless the requirements of 17.4.3.2.3 are met, where sprinklers are spaced less than 6 ft (1.8 m) apart, hangers spaced up to a maximum of 12 ft (3.7 m) shall be permitted.

Unless unique characteristics of the fitting make it appropriate to provide support near each fitting, spacing hangers up to 12 ft (3.7 m) apart is expected to adequately support the branch line piping where sprinklers are less than 6 ft (1.8 m) apart. This rule can also be applied where multiple pipe fittings are installed not more than 6 ft (1.8 m) from one another.

A.17.4.3.2.2 See Figure A.17.4.3.2.2.

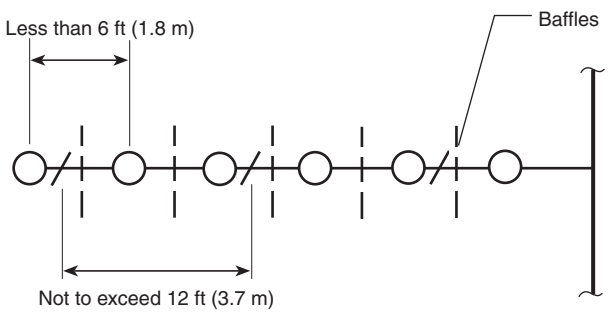

FIGURE A.17.4.3.2.2 *Distance Between Hangers.*

17.4.3.2.3 For welded or mechanical outlets on a continuous section of pipe, hanger spacing shall be according to Table 17.4.2.1(a) or Table 17.4.2.1(b).

17.4.3.2.4* Starter lengths less than 6 ft (1.8 m) shall not require a hanger, unless on the end line of a sidefeed system or where an intermediate cross main hanger has been omitted.

A.17.4.3.2.4 The "starter length" is the first piece of pipe on a branch line between the main, riser nipple, or drop and the first sprinkler. Starter pieces that are less than 6 ft (1.8 m) in length do not need a hanger of their own because they are supported by the main. However, if the intermediate hanger on the main is omitted, the starter piece needs to have a hanger because the main is going to be supported from the branch lines. The starter lengths can also apply to other piping, such as drains and test connections.

17.4.3.2.5* A single section of pipe shall not require a hanger when the cumulative distance between hangers on the branch line does not exceed the spacing required by Table 17.4.2.1(a) and Table 17.4.2.1(b).

Short lengths of pipe joined together do not require a hanger on each section of pipe, provided the spacing does not exceed the distances in Table 17.4.2.1(a) or Table 17.4.2.1(b). Each hanger will not have to support much more than the weight of a continuous section of pipe. Exhibit 17.11 illustrates the cumulative distance between the hangers.

EDUFIRE.IR

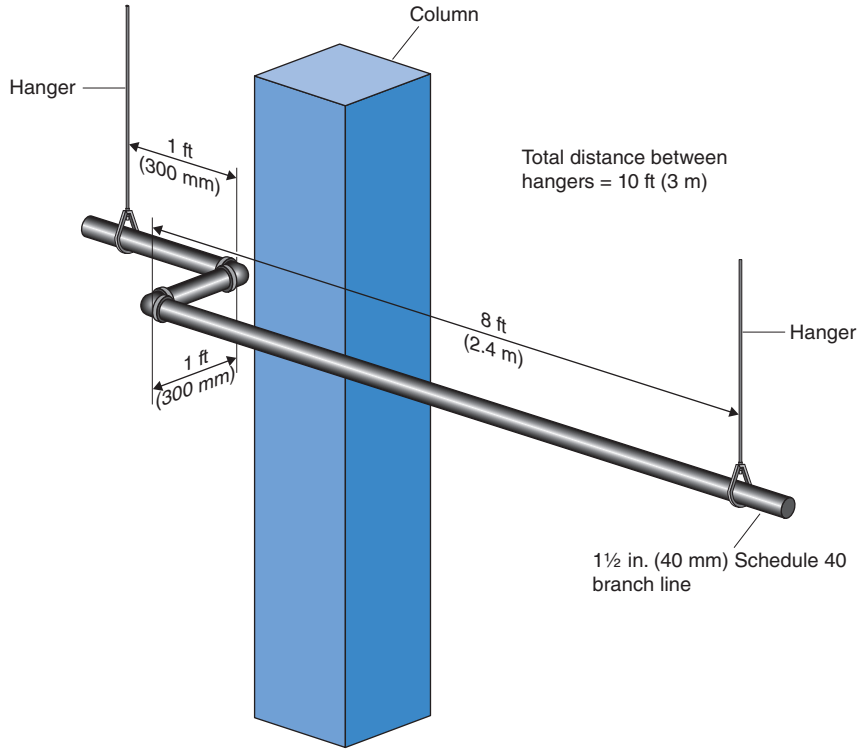

EXHIBIT 17.11 Cumulative Distance Between Hangers with Short Lengths of Pipe. (Courtesy of Stephan Laforest)

A.17.4.3.2.5 When a branchline contains offsets, sections of pipe are considered adequately supported by the hangers on the adjacent pipe sections when the overall distance between hangers does not exceed the requirements in Table 17.4.2.1(a) and Table 17.4.2.1(b). The cumulative distance includes changes in horizontal direction. Multiple consecutive sections of pipe should be permitted to omit hangers.

FAQ [17.4.3.3]

Why are upright sprinklers required to be at least 3 in. (75 mm) away from hangers?

Guidance for deflector positioning with respect to the hanger is intended to ensure that the hanger does not become an obstruction to discharge. If hangers, sway braces, or other pipe supports have an obstructing dimension in excess of ½ in. (13 mm), the obstruction rules in Chapter 8 for the appropriate type of sprinkler should be followed.

17.4.3.3 Clearance to Hangers. The distance between a hanger and the centerline of an upright sprinkler shall not be less than 3 in. (75 mm).

17.4.3.4* Unsupported Lengths.

A.17.4.3.4 Sprinkler piping should be adequately secured to restrict the movement of piping upon sprinkler operation. The reaction forces caused by the flow of water through the sprinkler could result in displacement of the sprinkler, thereby adversely affecting sprinkler discharge. Listed CPVC pipe has specific requirements for piping support to include additional pipe bracing of sprinklers. *(See Figure A.17.4.3.4.)*

As Figure A.17.4.3.4 illustrates, extending the branch line to the next structural member prevents an excessive cantilever of the piping.

17.4.3.4.1 For steel pipe, the unsupported horizontal length between the end sprinkler and the last hanger on the line shall not be greater than 36 in. (900 mm) for 1 in. (25 mm) pipe, 48 in. (1.2 m) for 1¼ in. (32 mm) pipe, and 60 in. (1500 m) for 1½ in. (40 mm) or larger pipe.

EDUFIRE.IR

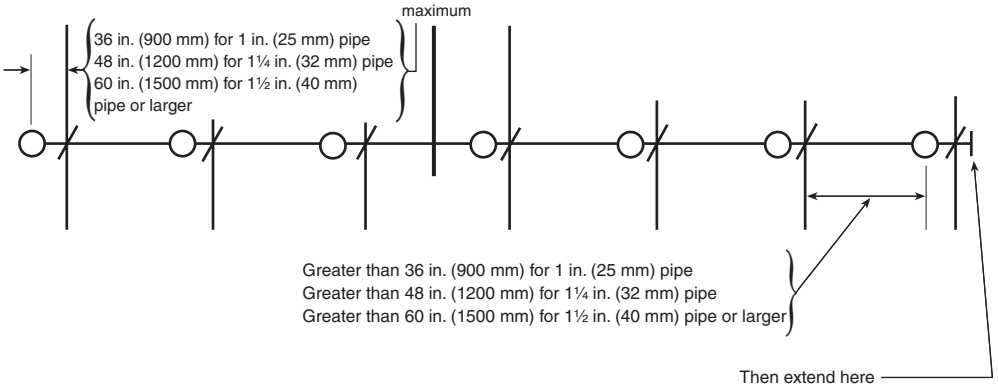

FIGURE A.17.4.3.4 *Distance from Sprinkler to Hanger.*

17.4.3.4.2 For copper tube, the unsupported horizontal length between the end sprinkler and the last hanger on the line shall not be greater than 18 in. (450 mm) for 1 in. (25 mm) pipe, 24 in. (600 mm) for 1¼ in. (32 mm) pipe, and 30 in. (750 mm) for 1½ in. (40 mm) or larger pipe.

17.4.3.4.3 Where the limits of 17.4.3.4.1 and 17.4.3.4.2 are exceeded, the pipe shall be extended beyond the end sprinkler and shall be supported by an additional hanger.

17.4.3.4.4* Unsupported Length with Maximum Pressure Exceeding 100 psi (6.9 bar) and Branch Line Above Ceiling Supplying Sprinklers in Pendent Position Below Ceiling.

Data have shown that unrestrained pendent sprinklers operating at high pressures can create a thrust force that lifts the branch line piping. At the end sprinkler and at armovers, the amount of thrust can be sufficient to lift a pendent sprinkler out of the ceiling tile and up into the concealed space.

Figure A.17.4.3.4.4(a) illustrates the intent of 17.4.3.4.4. Figure A.17.4.3.4.4(b) provides examples of acceptable types of hangers for end-of-line sprinklers or armover sprinklers.

A.17.4.3.4.4 See Figure A.17.4.3.4.4(a) and Figure A.17.4.3.4.4(b).

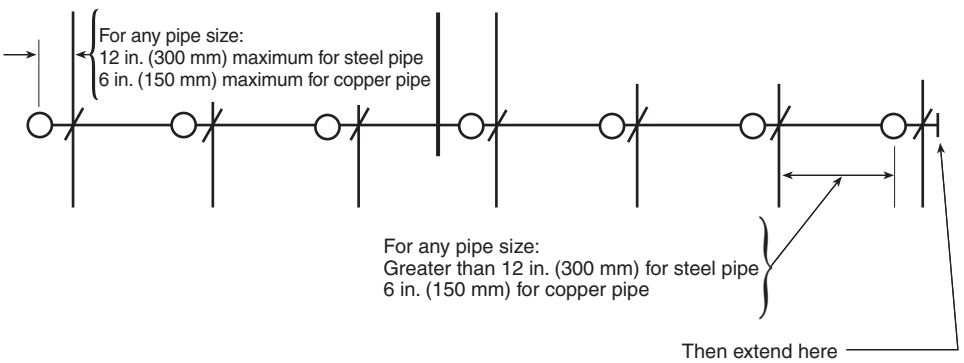

FIGURE A.17.4.3.4.4(a) *Distance from Sprinkler to Hanger Where Maximum Pressure Exceeds 100 psi (6.9 bar) and Branch Line Above Ceiling Supplies Pendent Sprinklers Below Ceiling.*

EDUFIRE.IR

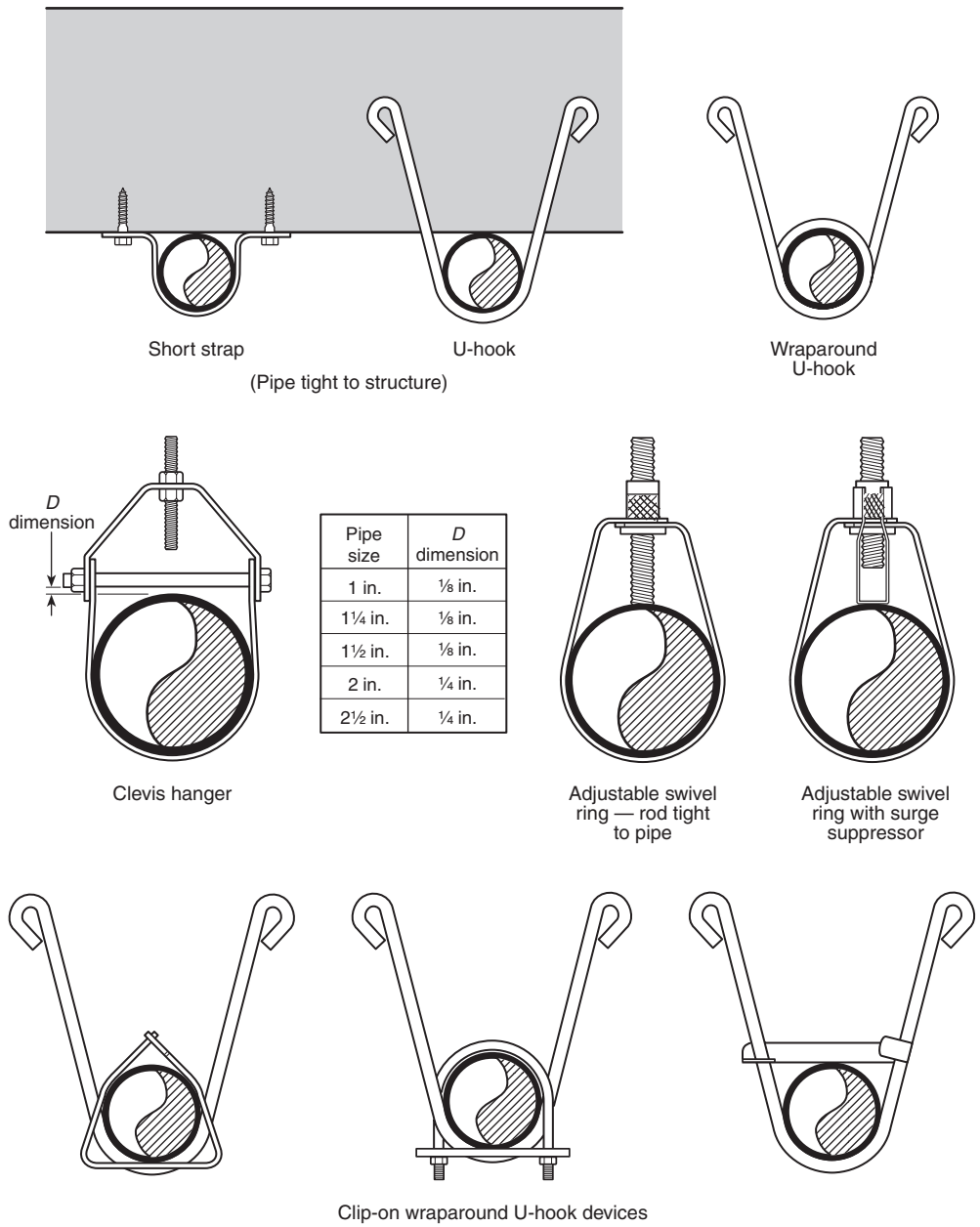

Pipe size	*D* dimension
1 in.	⅛ in.
1¼ in.	⅛ in.
1½ in.	⅛ in.
2 in.	¼ in.
2½ in.	¼ in.

For SI units, 1 in. = 25.4 mm.

FIGURE A.17.4.3.4.4(b) *Examples of Acceptable Hangers for End-of-Line (or Armover) Pendent Sprinklers.*

17.4.3.4.4.1 Where the maximum static or flowing pressure, whichever is greater at the sprinkler, applied other than through the fire department connection, exceeds 100 psi (6.9 bar) and a branch line above a ceiling supplies sprinklers in a pendent position below the ceiling, the hanger assembly supporting the pipe supplying an end sprinkler in a pendent position shall be of a type that restrains upward movement of the pipe.

17.4.3.4.4.2 The unsupported length between the end sprinkler in a pendent position or drop nipple and the last hanger on the branch line shall not be greater than 12 in. (300 mm) for steel pipe or 6 in. (150 mm) for copper pipe.

EDUFIRE.IR

17.4.3.4.4.3 When the limit of 17.4.3.4.4.2 is exceeded, the pipe shall be extended beyond the end sprinkler and supported by an additional hanger.

17.4.3.4.4.4 Unless flexible hose fittings in accordance with 17.4.1.3.3.1 and ceilings in accordance with 17.4.1.3.3.2 are used, the hanger closest to the sprinkler shall be of a type that restrains the pipe from upward movement.

17.4.3.5* Unsupported Armover Length.

A.17.4.3.5 See Figure A.17.4.3.5.

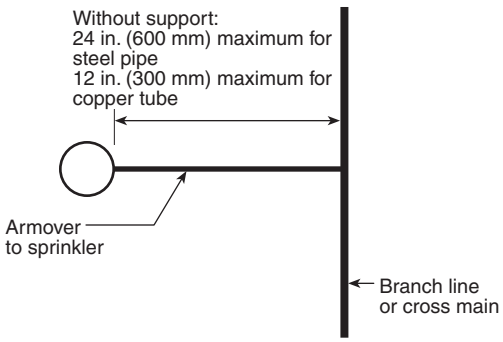

FIGURE A.17.4.3.5 *Maximum Length for Unsupported Armover.*

17.4.3.5.1 The cumulative horizontal length of an unsupported armover to a sprinkler, sprinkler drop, or sprig shall not exceed 24 in. (600 mm) for steel pipe or 12 in. (300 mm) for copper tube.

17.4.3.5.2* Unsupported Armover Length with Maximum Pressure Exceeding 100 psi (6.9 bar) and Branch Line Above Ceiling Supplying Sprinklers in Pendent Position Below Ceiling.

Exhibit 17.12 illustrates an unsupported armover for an upright sprinkler. Listed fittings that tend to rotate unless restrained either incorporate a mechanism to make rotation impossible or have, as part of their listing, a requirement for the use of a hanger on any armover, regardless of length. Incorporation of these requirements maintains system effectiveness, even at high operating pressures.

A.17.4.3.5.2 See Figure A.17.4.3.5.2.

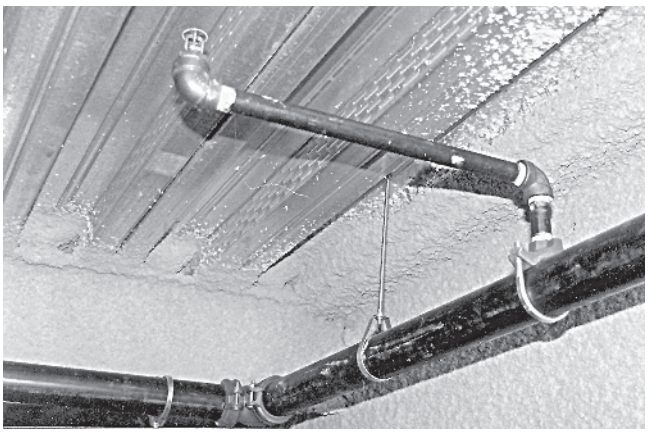

EXHIBIT 17.12 *Unsupported Armover to Upright Sprinkler.*

EDUFIRE.IR

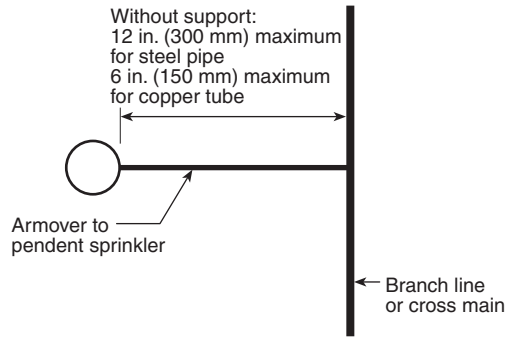

Note: The pendent sprinkler can be installed either directly in the fitting at the end of the armover or in a fitting at the bottom of a drop nipple.

FIGURE A.17.4.3.5.2 *Maximum Length of Unsupported Armover Where Maximum Pressure Exceeds 100 psi (6.9 bar) and Branch Line Above Ceiling Supplies Pendent Sprinklers Below Ceiling.*

17.4.3.5.2.1 Where the maximum static or flowing pressure, whichever is greater at the sprinkler, applied other than through the fire department connection, exceeds 100 psi (6.9 bar) and a branch line above a ceiling supplies sprinklers in a pendent position below the ceiling, the cumulative horizontal length of an unsupported armover to a sprinkler or sprinkler drop shall not exceed 12 in. (300 mm) for steel pipe and 6 in. (150 mm) for copper tube.

17.4.3.5.2.2 Unless flexible sprinkler hose fittings in accordance with 17.4.1.3.3.1 are used, the hanger closest to the sprinkler shall be of a type that restrains upward movement of the pipe.

17.4.3.5.2.3 Where the armover exceeds the maximum unsupported length of 17.4.3.5.2.1, a hanger shall be installed so that the distance from the end sprinkler or drop nipple to the hanger is not greater than 12 in. (300 mm) for steel or 6 in. (150 mm) for copper, or the pipe shall be extended beyond the end sprinkler and shall be supported by an additional hanger.

17.4.3.6* Wall-mounted sidewall sprinklers shall be restrained to prevent movement.

A.17.4.3.6 The movement that is being restrained is to keep the sidewall sprinkler in its intended location during and post-operation. This should not be confused with the loads applicable to seismic restraints.

17.4.3.7 Sprigs. Sprigs 4 ft (1.2 m) or longer shall be restrained against lateral movement.

17.4.4 Location of Hangers on Mains.

17.4.4.1 Unless any of the requirements of 17.4.4.2 through 17.4.4.7 are met, hangers for mains shall be in accordance with 17.4.2, between each branch line, or on each section of pipe, whichever is the lesser dimension.

17.4.4.2 For welded or mechanical outlets on a continuous section of pipe, hanger spacing shall be according to Table 17.4.2.1(a) or Table 17.4.2.1(b).

17.4.4.3 For cross mains in steel pipe systems in bays having two branch lines, the intermediate hanger shall be permitted to be omitted, provided that a hanger attached to a purlin is installed on each branch line located as near to the cross main as the location of the purlin permits.

EDUFIRE.IR

17.4.4.3.1 The remaining branch line hangers shall be installed in accordance with 17.4.3.

17.4.4.4 For cross mains in steel pipe systems only in bays having three branch lines, either side or center feed, one (only) intermediate hanger shall be permitted to be omitted, provided that a hanger attached to a purlin is installed on each branch line located as near to the cross main as the location of the purlin permits.

17.4.4.4.1 The remaining branch line hangers shall be installed in accordance with 17.4.3.

17.4.4.5 For cross mains in steel pipe systems only in bays having four or more branch lines, either side or center feed, two intermediate hangers shall be permitted to be omitted, provided the maximum distance between hangers does not exceed the distances specified in 17.4.2 and a hanger attached to a purlin on each branch line is located as near to the cross main as the purlin permits.

Cross mains of materials other than steel must have at least one hanger between every two branch lines but cannot exceed the hanger spacing allowances of 17.4.2, with at least one hanger on each section of pipe. With steel pipe cross mains, a hanger can be installed between every two branch lines or, alternatively, on each branch line as near as possible to the cross main, while omitting one intermediate cross main hanger in each bay. This approach can reduce or eliminate the need for trapeze hangers.

The option to omit the intermediate cross main hanger applies to the last piece of cross main only if the main is extended to the next framing member and a hanger is also installed at that point.

N **17.4.4.6** The unsupported length of the end of a main shall be no greater than one half the maximum allowable hanger spacing per Table 17.4.2.1(a) and Table 17.4.2.1(b).

17.4.4.7 At the end of the main, intermediate trapeze hangers shall be installed unless the main is extended to the next framing member with a hanger installed at this point, in which event an intermediate hanger shall be permitted to be omitted in accordance with 17.4.4.3, 17.4.4.4, and 17.4.4.5.

17.4.4.8* A single section of pipe shall not require a hanger when the cumulative distance between hangers on the main does not exceed the spacing required by Table 17.4.2.1(a) and Table 17.4.2.1(b).

Mains might have short sections of pipe between branch lines. The hangers for these pipes can be spaced using the cumulative distance, as illustrated in Exhibit 17.11.

A.17.4.4.8 When a main contains offsets, sections of pipe are considered adequately supported by the hangers on the adjacent pipe sections when the overall distance between hangers does not exceed the requirements in Table 17.4.2.1(a) and Table 17.4.2.1(b). The cumulative distance includes changes in horizontal direction. Multiple consecutive sections of pipe should be permitted to omit hangers.

N **17.4.4.9** The unsupported length of the end of a main shall be no greater than one half the maximum allowable hanger spacing per Table 17.4.2.1(a) and Table 17.4.2.1(b).

17.4.5 Support of Risers.

17.4.5.1 Risers shall be supported by riser clamps or by hangers located on the horizontal connections within 24 in. (600 mm) of the centerline of the riser.

Typically, risers are supported by a friction-type clamp that rests on or is secured to the floor slab. However, risers can also be supported with riser clamps that are fastened to the building structure (see Exhibit 17.13) or with hangers that support the horizontal piping at the top of the riser.

17.4.5.2 Riser clamps supporting risers by means of set screws shall not be used.

To adequately support a riser, the full surface of a clamp must bear against the surface of the pipe, as shown in Exhibit 17.13.

EXHIBIT 17.13 Riser Supported with Pipe Clamp Fastened to Building Structure.

EDUFIRE.IR

17.4.5.3* Riser clamps anchored to walls using hanger rods in the horizontal position shall not be permitted to vertically support risers.

Paragraph 17.4.5.3 does not preclude the use of pipe clamps supported from walls as part of an intermediate riser support. Such intermediate supports are required at maximum 25 ft (7.6 m) intervals by 17.4.5.5. However, hanger rods are not permitted to anchor the clamps.

A.17.4.5.3 This arrangement is acceptable to establish and secure the riser's lateral position but not to support the riser's vertical load.

17.4.5.4 Multistory Buildings.

Flexible couplings and fittings allow limited axial movement. In the case of risers in multistory buildings, the axial expansion resulting from system pressurization can be significant unless the movement from upward thrust is prevented.

Risers with horizontal offsets can be supported at both the top and the bottom in accordance with 17.4.5.4.1. When the requirements for horizontal offsets exceeding 6 ft (1.8 m) in length are applied, it is important that all the other hanger provisions of NFPA 13 be considered. Where several small sections of pipe are used to negotiate obstructions, it might not be necessary to use a hanger or support on each piece.

17.4.5.4.1 In multistory buildings, riser supports shall be provided at the lowest level, at each alternate level above, above and below offsets, and at the top of the riser.

17.4.5.4.2* Supports above the lowest level shall also restrain the pipe to prevent movement by an upward thrust where flexible fittings are used.

A.17.4.5.4.2 The restraint required by 17.4.5.4.2 is needed to prevent accumulated vertical movement when the riser is pressurized. Restraint is generally provided by use of a riser clamp at the underside of a floor slab.

17.4.5.4.3 Where risers are supported from the ground, the ground support shall constitute the first level of riser support.

17.4.5.4.4 Where risers are offset or do not rise from the ground, the first ceiling level above the offset shall constitute the first level of riser support.

17.4.5.5 Distance between supports for risers shall not exceed 25 ft (7.6 m).

A maximum distance between supports, as required by 17.4.5.5, is necessary to distribute the load and keep the system in its intended location.

17.5* Pipe Stands.

A.17.5 Where applicable, the design of pipe stands should consider additional loading from other sources. Environmental impacts, including water accumulation at the base, corrosion, and wind, should also be taken into account as appropriate.

The performance of piping support systems should allow for expansion and contraction due to temperature change, expansion due to internal water pressure (thrust), restrained and/or unrestrained joints or pipe runs, heavy point loads (e.g., valves), and pipe deflection (span/support spacing). Manufacturer's installation instructions and engineering design guides should be consulted when available.

Examples of common applications include headers and horizontal runs of pipe that need support from the floor.

EDUFIRE.IR

17.5.1 General.

17.5.1.1 Where pipe stands are used to support system piping, the requirements of Section 17.5 shall apply unless the requirements of 17.5.1.2 are met.

17.5.1.2 Pipe stands certified by a registered professional engineer to include all of the following shall be an acceptable alternative to the requirements of Section 17.5:

(1) Pipe stands shall be designed to support five times the weight of water-filled pipe plus 250 lb (115 kg) at each point of piping support.
(2) These points of support shall be adequate to support the system.
(3) The spacing between pipe stands shall not exceed the value given for the type of pipe as indicated in Table 17.4.2.1(a) or Table 17.4.2.1(b).
(4) Pipe stand components shall be ferrous.
(5) Detailed calculations shall be submitted, when required by the reviewing authority, showing stresses developed in the pipe stand, the system piping and fittings, and safety factors allowed.

17.5.1.3 Where water-based fire protection systems are required to be protected against damage from earthquakes, pipe stands shall also meet the requirements of Section 18.8.

17.5.2 Component Material.

17.5.2.1 Pipe stands and their components shall be ferrous unless permitted by 17.5.2.2.

17.5.2.2 Nonferrous components that have been proven by fire tests to be adequate for the hazard application and that are in compliance with the other requirements of this section shall be acceptable.

17.5.3 Sizing.

Paragraphs 17.5.3.1 through 17.5.7.2 were added in the 2016 edition to provide prescriptive sizing, construction, and anchoring of pipe stands. It is acceptable to follow these requirements when pipe stands or engineering pipe stands are being provided in accordance with 17.5.1.2.

17.5.3.1* The maximum heights for pipe stands shall be in accordance with Table 17.5.3.1 unless the requirements of 17.5.3.2 are met.

TABLE 17.5.3.1 *Maximum Pipe Stand Heights*[a]

System Pipe Diameter[c]	*Pipe Stand Diameter*[b]					
	1½ in.	*2 in.*	*2½ in.*	*3 in.*	*4 in.*	*6 in.*
1½ in.	6.6 ft	9.4 ft	11.3 ft	13.8 ft	18.0 ft	26.8 ft
2 in.	4.4 ft	9.4 ft	11.3 ft	13.8 ft	18.0 ft	26.8 ft
2½ in.	—	8.1 ft	11.3 ft	13.8 ft	18.0 ft	26.8 ft
3 in.	—	5.2 ft	11.3 ft	13.8 ft	18.0 ft	26.8 ft
4 in. up to and including 8 in.	—	—	—	—	14.7 ft	26.8 ft

[a]For SI units, 1 in. = 25.4 mm; 1 ft = 0.305 m.

[b]Pipe stands are Schedule 40 pipe.

[c]System piping is assumed to be Schedule 40 [8 in. (200 mm) is Schedule 30].

A.17.5.3.1 When a pipe stand does not resist lateral (e.g., earthquake or wind) forces, its maximum height and the weight of pipe it can support are based primarily on a limiting slenderness ratio (Kl/r), and on the axial and bending stresses caused by the vertical load applied at a specified eccentricity.

EDUFIRE.IR

The pipe stand heights presented in Table 17.5.3.1 have been calculated using a "K" of 2.1 (i.e., assuming the pipe stand is an individual cantilever column) and a slenderness ratio limit of 300, except where combined axial and bending stresses caused by the vertical load at an eccentricity of 12 in. (300 mm) controls the design. In these cases, the pipe stand height is reduced such that the allowable axial stress (F_a) is sufficient to limit the combined axial stress ratio (f_a/F_a, i.e., actual axial stress divided by allowable axial stress) plus the bending stress ratio (f_b/F_b, i.e., actual bending stress divided by allowable bending stress) to 1.0. Two cases are considered: a vertical load at a 12 in. (300 mm) eccentricity equal: a) 5 times the weight of the water-filled pipe plus 250 lb (115 kg) using a bending stress allowable of 28,000 psi (193 MPa), and b) the weight of the water-filled pipe plus 250 lb (115 kg) using a bending stress allowable of 15,000 psi (103 MPa). No drift limit was imposed.

When an engineering analysis is conducted, different pipe stand heights could be calculated if other assumptions are warranted based on actual conditions. For example, $K = 1.0$ can be used if the pipe at the top of the pipe stand is braced in both horizontal directions, or a shorter cantilever column could be used to limit drift.

Pipe stands are intended to be a single piece of pipe. For lengths that require joining pipes they should be welded to ensure the strength is maintained.

17.5.3.2* Pipe diameters up to and including 10 in. (250 mm) Schedule 40 are permitted to be supported by 2 in. (50 mm) diameter pipe stands when all of the following conditions are met:

(1) The maximum height shall be 4 ft (1.2 m), as measured from the base of the pipe stand to the centerline of the pipe being supported.
(2)* The pipe stand shall be axially loaded.

Axial loading requires that the pipe or valve being supported be located directly above the pipe stand.

A.17.5.3.2 These short pipe stands commonly support items such as backflow preventers, header piping, and other appurtenances.

A.17.5.3.2(2) The allowances for these short pipe stands do not account for eccentric loadings. See Figure A.17.5.3.2(2).

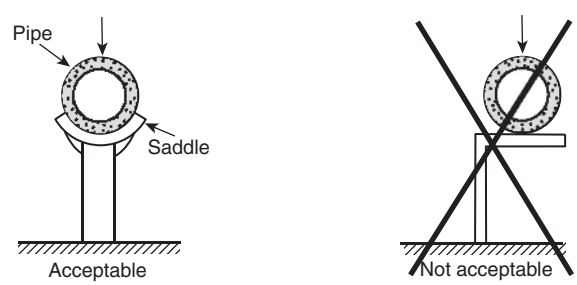

FIGURE A.17.5.3.2(2) *Acceptable Axial Loading and Unacceptable Loading.*

17.5.3.3 The distance between pipe stands shall not exceed the values in Table 17.4.2.1(a) or Table 17.4.2.1(b).

17.5.4 Pipe Stand Base.

17.5.4.1 The pipe stand base shall be secured by an approved method.

17.5.4.2* Pipe stand base plates shall be threaded malleable iron flanges or welded steel flanges in accordance with Table 7.4.1.

A.17.5.4.2 Where welded steel flanges are used for the base plate, the entire circumference of the flange should be welded.

EDUFIRE.IR

17.5.4.2.1 Pipes stands installed in accordance with 17.5.3.2 shall be permitted to use a welded steel plate.

17.5.4.3* Pipe stands shall be fastened to a concrete floor or footing using listed concrete anchors or other approved means.

To ensure that the pipe stand stays in its original location throughout the lifespan of the system, it is important for the base to be secured in place. Movement could occur with building vibrations or even the charging or draining of the system piping if the base of the pipe stands are not secured.

A.17.5.4.3 Examples of acceptable anchors can be listed inserts set in concrete, listed post-installed anchors, bolts for concrete, or cast-in-place J hooks.

17.5.4.4 A minimum of four anchors shall be used to attach the base plate to the floor.

17.5.4.4.1 Pipe stands installed in accordance with 17.5.3.2 shall be permitted to use a minimum of two anchors to attach the base plate to the floor.

17.5.4.5 The minimum diameter for the anchors shall be ½ in. (15 mm) for pipe stand diameters up to and including 3 in. (80 mm) and ⅝ in. (16 mm) for pipe stands 4 in. (100 mm) diameter and larger.

17.5.4.5.1 Where the pipe stand complies with 17.5.3.2, ⅜ in. (10 mm) anchors shall be permitted.

17.5.5 Attaching to System Piping.

17.5.5.1 Piping shall be attached to the pipe stand with U-bolts or equivalent attachment.

17.5.5.2* Where a horizontal bracket is used to attach the system piping to the pipe stand, it shall not be more than 1 ft (0.3 m) as measured horizontally from the centerline of the pipe stand to the centerline of the supported pipe.

Per 17.5.5.2, 12 in. (300 mm) is the maximum cantilever permitted for the prescriptive method of pipe stands. A longer horizontal bracket might be permitted if an engineering analysis indicates the appropriate load capacities.

A.17.5.5.2 See Figure A.17.5.5.2.

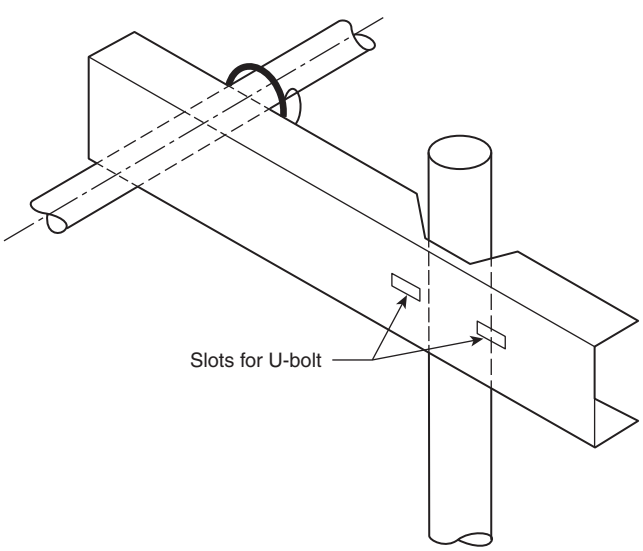

FIGURE A.17.5.5.2 *Example of a Horizontal Bracket Attached to a Pipe Stand.*

EDUFIRE.IR

17.5.5.3 Horizontal support brackets shall be sized such that the section modulus required in Table 17.5.5.3 does not exceed the available section modulus from Table 17.3.1(b).

TABLE 17.5.5.3 *Required Section Modulus for Pipe Stand Horizontal Support Arms (in.^{3})*

Nominal Diameter of Pipe Being Supported (in.)	*1*	*1¼*	*1½*	*2*	*2½*	*3*	*3½*	*4*	*5*	*6*	*8*
Section Modulus – Schedule 10 Steel	0.22	0.23	0.24	0.25	0.30	0.36	0.42	0.49	0.66	0.85	1.40
Section Modulus – Schedule 40 Steel	0.22	0.24	0.24	0.27	0.36	0.45	0.54	0.63	0.86	1.13	1.64

For SI units, 1 in. = 25.4 mm.

Note: The table is based on the controlling section modulus determined for a concentrated load at a 1 ft (0.3 m) cantilever using: a) a maximum bending stress of 15 ksi (103 MPa) and a concentrated load equal to the weight of 15 ft (4.6 m) of water-filled pipe plus 250 lb (115 kg), or b) a maximum bending stress of 28 ksi (193 MPa) and a concentrated load equal to five times the weight of 15 ft (4.6 m) of water-filled pipe plus 250 lb (115 kg).

Other materials could be used as a horizontal support bracket, even if they are not included in Table 17.3.1(b), provided that they provide an equal or greater section modulus to the required values in Table 17.5.5.3. Similar to trapeze hangers where materials other than steel are proposed for use, an engineering analysis must be completed to determine the material's capability.

17.5.6 Thrust.

17.5.6.1* System piping shall be supported and restrained to restrict movement due to sprinkler/nozzle reaction and water surges.

A.17.5.6.1 The support and restraint are needed in order to maintain system performance and integrity. Water surges could be from filling the system, from system operation, or water supply related.

17.5.6.2* Where thrust forces are anticipated to be high, a pipe ring or clamp shall secure the system piping to the pipe stand.

A.17.5.6.2 Traditionally, pipe saddles have been used, which creates a "U" for the pipe to rest in. However, thrust forces in some applications can be large enough to move the pipe off the saddle. Therefore, a pipe ring or clamps should be around the system piping to keep it in place.

17.5.7 Exterior Applications.

17.5.7.1 Where required, pipe stands used in exterior applications shall be made of galvanized steel or other suitable corrosion-resistant materials.

17.5.7.2 A welded, threaded, grooved, or other approved cap shall be securely attached to the top of the pipe stand.

References Cited in Commentary

National Fire Protection Association, 1 Batterymarch Park, Quincy, MA 02169-7471.
NFPA 14, *Standard for the Installation of Standpipe and Hose Systems*, 2016 edition.
NFPA 15, *Standard for Water Spray Fixed Systems for Fire Protection*, 2017 edition.

American Concrete Institute, 38800 Country Club Drive, Farmington Hills, MI 48331.
ACI 318.2, *Building Code Requirements for Concrete Thin Shells*, 2014 edition.

ASTM International, 100 Barr Harbor Drive, P.O. Box C700, West Conshohocken, PA 19428-2959.
ASTM C635/C635M, *Standard Specification for the Manufacture, Performance, and Testing of Metal Suspension Systems for Acoustical Tile and Lay-in Panel Ceilings*, 2013a.

EDUFIRE.IR

ASTM C636/C636M, *Standard Practice for Installation of Metal Ceiling Suspension Systems for Acoustical Tile and Lay-In Panels*, 2013a.

Building Seismic Safety Council, National Institute of Building Sciences, 1090 Vermont Avenue, N.W., Suite 700, Washington, DC 20005-4905.

"Seismic Qualification Tests of Sprinkler Systems," Department of Civil, Structural and Environmental Engineering, State University of New York, Buffalo, NY, October 7, 2005.

EDUFIRE.IR

EDUFIRE.IR

CHAPTER

18

Installation Requirements for Seismic Protection

REORGANIZATION NOTE

Formerly Section 9.3, the installation requirements for seismic protection have been given their own chapter. Sections have been renumbered to incorporate the Chapter 18 prefix.

The requirements of Chapter 18 are for the general protection of fire sprinkler systems against damage resulting from seismic activity and are based on a comprehensive approach of providing not only bracing but also flexible connections, pipe clearance to structural members, pipe restraint, and restrictions on the types of hangers and fasteners used.

Seismic protection is imperative to some buildings depending on their location. However, not all areas are subject to seismic activity or expect significant seismic forces if an event were to occur. Not all fire sprinkler systems require seismic bracing. Usually the local or state building code will drive the need for seismic bracing; however, the authority having jurisdiction and the system designers and/or technicians should agree early in the project whether protection against seismic damage in accordance with Chapter 18 will be required.

The decision to require protection of sprinkler systems or other mechanical systems against earthquake forces is generally stated within building codes or is determined by other authorities having jurisdiction. The decision is based on past seismic activity within an area and the potential for future earthquakes. The determination of seismic protection hinges on the location of the project and the nature of the occupancy of the building.

Requirements for the protection of fire sprinkler systems against earthquake damage have been included in NFPA 13 since 1947, and the performance of sprinkler systems in earthquakes generally has been effective over the past 70 years. Following the San Fernando, California, earthquake in 1971 (6.7 moment magnitude), the Pacific Fire Rating Bureau surveyed 973 sprinklered buildings and reported that if a sprinklered building fared well, so did the sprinkler system. Fire sprinkler performance studies of the Loma Prieta earthquake in 1989 (6.9 moment magnitude) and the Northridge earthquake in 1994 (6.7 moment magnitude) have reinforced that observation. The evidence has been clear that systems installed in conformance with NFPA 13 criteria sustained far less damage than systems that did not meet those provisions.

Knowledge gained from past earthquakes has led to continued modifications of the NFPA 13 requirements, which have been aimed at avoiding significant damage to sprinkler systems and permitting sprinkler systems to remain functional following an earthquake. In recent years, additional changes have been made to better coordinate the provisions of NFPA 13 with those of the National Earthquake Hazards Reduction Program's "Recommended Provisions for Seismic Regulations for New Buildings and Other Structures." These provisions, which have gone through several iterations, were developed through the Building Seismic Safety Council of the National Institute of Building Sciences, with funding from the U.S. Federal Emergency Management Agency. The provisions have served as the basis of successive changes to model building codes in the United States and are incorporated in SEI/ASCE 7, *Minimum Design Loads for Buildings and Other Structures*, which is adopted by reference in current model building codes. NFPA 13 has continued to change and evolve as needed for proper seismic protection of life safety piping systems so that it maintains its status as "deemed compliant" with SEI/ASCE 7.

EDUFIRE.IR

Note that the protection criteria contained in NFPA 13 do not specifically address water supply components, such as fire pumps and tanks, because installation of those components is outside the scope of NFPA 13. Nevertheless, fire pumps and tanks and their associated piping should be braced against horizontal accelerations in a fashion similar to system piping. The fastener load capacity within NFPA 13 can be applied.

18.1* Protection of Piping Against Damage Where Subject to Earthquakes.

N **A.18.1** Sprinkler systems are protected against earthquake damage by means of the following:

(1) Stresses that would develop in the piping due to differential building movement are minimized through the use of flexible joints or clearances.
(2) Bracing is used to keep the piping fairly rigid when supported from a building component expected to move as a unit, such as a ceiling.

FAQ [18.1]

Does NFPA 13 establish where protection against earthquakes is required geographically?

Chapter 18 describes how to protect sprinkler systems against earthquake damage but does not specify where to provide such protection geographically. Example maps that were included in previous editions of NFPA 13 were removed to make it clear that NFPA 13 does not address the issue of where earthquake protection of sprinkler systems is to be provided.

Areas known to have a potential for earthquakes have been identified in building code and insurance maps.

Displacement due to story drift is addressed in Sections 18.2 through 18.4.

Piping in racks needs to be treated like other sprinkler piping and protected in accordance with the proper rules. Piping to which in-rack sprinklers are directly attached should be treated as branch line piping. Piping that connects branch lines in the racks should be treated as mains. The bracing, restraint, flexibility, and requirements for flexible couplings are the same in the rack structures as at the ceiling.

Cloud ceilings can cause challenges for a sprinkler system in an earthquake where sprinklers are installed below the clouds to protect the floor below. Depending on the support structure of the cloud and the construction material of the cloud, differential movement could damage a sprinkler that is not installed in a fashion to accommodate the movement. Currently, there are no structural requirements in ASCE/SEI 7, *Minimum Design Loads for Buildings and Other Structures*, for the clouds to be seismically braced. Unbraced cloud ceilings in higher seismic areas could easily displace during design earthquakes half the suspension length or more. One solution might be to use flexible sprinkler hose with the bracket connected to the cloud so that the sprinkler will move with the cloud should seismic motion occur provided the ceiling system is constructed per ASTM C635/C635M, *Standard Specification for the Manufacture, Performance, and Testing of Metal Suspension Systems of Acoustical Tile and Lay-In Panel Ceilings*, and ASTM C636/C636M, *Standard Practice for Installation of Metal Ceiling Suspension Systems for Acoustical Tile and Lay-In Panels*, then special connections could require an engineered design. When a sprinkler is rigidly piped to the cloud, appropriate flexibility and clearances should be maintained to handle the anticipated movement.

FAQ [A.18.1]

What is story drift?

Story drift is the maximum lateral displacement within a story — that is, the displacement of one floor relative to the floor below — caused by the effects of seismic loads.

The earthquake protection criteria addressed in Section 18.1 involve requirements aimed at avoiding piping stress through the use of flexible fittings and clearances as well as requirements to maintain system alignment and to prevent the development of damage-inducing momentum through the use of sway bracing and restraint. In general, if the building is designed to resist earthquakes, the sprinkler system also should be protected. However, some codes exempt sprinkler and other mechanical systems from protection criteria in low-risk seismic zones.

Story drift is one aspect of the seismic design of buildings. Because some construction types are more flexible than others, maximum story drift is limited by building codes based on the type of construction. The amount of flexibility inherent in sprinkler systems due to the requirements of Sections 18.2 through 18.4 has been deliberately established at a high level to meet the minimum story drift requirements of the codes, regardless of construction type. The most significant feature of the NFPA 13 criteria is

EDUFIRE.IR

the requirement of 18.2.3.1(2) for two flexible couplings per floor on a riser, allowing the riser to accommodate more story drift than is contemplated for even the most flexible of buildings.

18.1.1 Where water-based fire protection systems are required to be protected against damage from earthquakes, the requirements of Chapter 18 shall apply, unless the requirements of 18.1.2 are met.

It is the intent of NFPA 13 to have the sprinkler system coordinate movement from a seismic event with the building structure where the building code requires a sprinkler system to be protected for motion of an earthquake. The sprinkler system and the building are to move as one unit, which traditionally is accomplished with sway braces connecting the system piping and the structure. Where the building is expected to move, the sprinkler system must be able to accommodate that motion. For example, where there is a seismic joint that can create differential movement of the structure, the sprinkler system also must have a seismic joint so that the system is not damaged from the movement.

A fire sprinkler system is held in place within a building with some combination of sway bracing, restraint hangers, and pipe stands. These components should be laid out in such a manner that all potential horizontal movement expected from an earthquake is controlled. These methods are prescribed in detail for both the needed rigidity and the needed flexibility of the system and its supports.

18.1.2 Alternative methods of providing earthquake protection of sprinkler systems based on a seismic analysis certified by a registered professional engineer such that system performance will be at least equal to that of the building structure under expected seismic forces shall be permitted.

Subsection 18.1.2 permits a performance-based alternative to the rules of Chapter 18 in the form of a seismic analysis certified by a registered professional engineer. This waiver of NFPA 13 criteria allows for special building designs, such as buildings equipped with base isolation systems to prevent the transfer of earthquake accelerations to the building and its mechanical systems. It also allows the use of sway bracing methods or configurations different from those prescribed in this standard when they are certified by a registered professional engineer.

18.1.3 Obstructions to Sprinklers. Braces and restraints shall not obstruct sprinklers and shall comply with the obstruction rules of Chapters 10 through 14.

It is important that all components of a sprinkler system meet the obstruction rules as outlined in NFPA 13 or as specified by the manufacturer's installation instructions.

18.2* Flexible Couplings.

A.18.2 Strains on sprinkler piping can be greatly lessened and, in many cases, damage prevented by increasing the flexibility between major parts of the sprinkler system. One part of the piping should never be held rigidly and another part allowed to move freely without provision for relieving the strain. Flexibility can be provided by using listed flexible couplings, by joining grooved end pipe at critical points, and by allowing clearances at walls and floors.

Tank or pump risers should be treated the same as sprinkler risers for their portion within a building. The discharge pipe of tanks on buildings should have a control valve above the roof line so any pipe break within the building can be controlled.

Piping 2 in. (50 mm) or smaller in size is pliable enough so that flexible couplings are not usually necessary. "Rigid-type" couplings that permit less than 1 degree of angular movement at the grooved connections are not considered to be flexible couplings. *[See Figure A.18.2(a) and Figure A.18.2(b).]*

EDUFIRE.IR

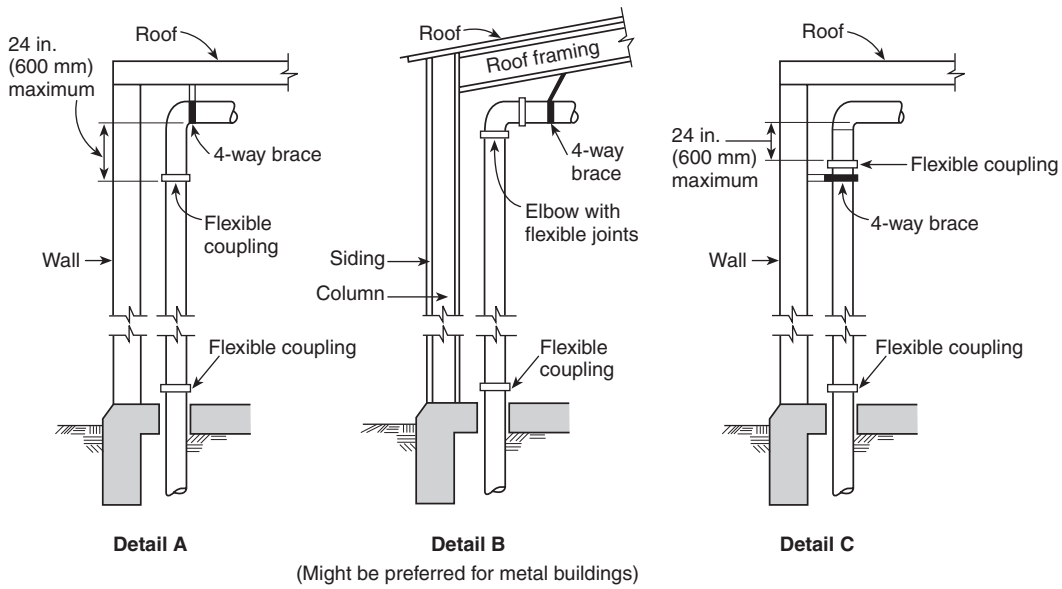

Note to Detail A: The four-way brace should be attached above the upper flexible coupling required for the riser and preferably to the roof structure if suitable. The brace should not be attached directly to a plywood or metal deck.

FIGURE A.18.2(a) *Riser Details.*

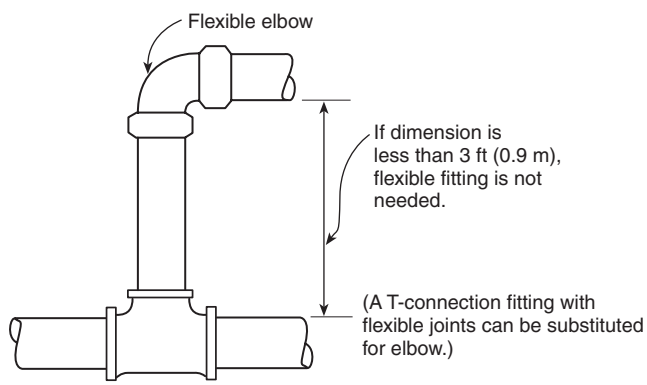

FIGURE A.18.2(b) *Detail at Short Riser.*

The term *flexible coupling* is defined in 3.3.78 as "a listed coupling or fitting that allows axial displacement, rotation, and at least 1 degree of angular movement of the pipe without inducing harm on the pipe." Couplings or fittings that do not allow such movement are considered rigid-type mechanical couplings. The manufacturer is obligated to designate any particular mechanical fitting as being flexible or rigid, and the designated characteristic is verified by the listing agency. Although a flexible coupling can accommodate earthquake motion in many situations, the potential movement might be so great in a particular scenario or configuration that a single coupling will not be adequate. In such situations, multiple couplings or swing joints might be needed.

Flexible couplings are required within the system at critical points to minimize stresses on the piping. Special flexible listed pipe should be considered to satisfy the requirements for flexible couplings only if equivalent levels of flexibility can be achieved without harm to the pipe. (See Exhibit 18.1.)

Details A and B of Figure A.18.2(a) show risers connected to roof framing, while C shows a riser connected to the wall, including sway bracing for the top of the riser. Support as shown in detail C is usually

EDUFIRE.IR

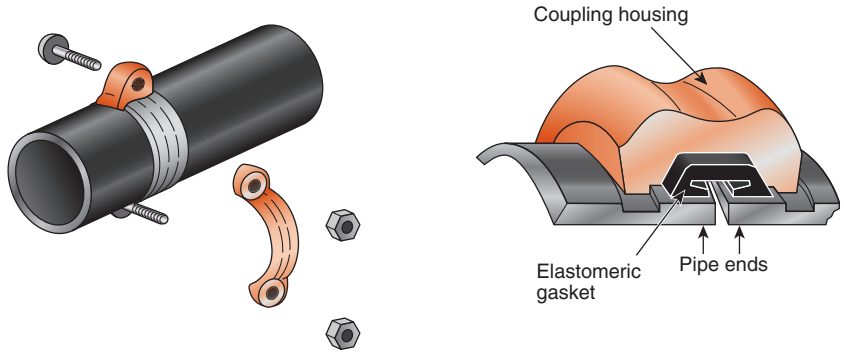

EXHIBIT 18.1 Flexible Pipe Coupling: (left) Attaching Method and (right) Cut-Away View.

where connection to the roof structure is more complex than connection to the wall or where very light-weight roof structures are used. The sway brace connection to the pipe should always be within 24 in. (600 mm) of the flexible coupling, as shown in details A and C. Figure A.18.2(a) shows that bracing to the wall should be below the upper flexible coupling on the riser. In that manner, the piping is not held rigidly to building components that might move differentially — such as a wall and a roof structure — during an earthquake.

18.2.1 Flexible couplings joining grooved end pipe shall be provided as flexure joints to allow individual sections of piping 2½ in. (65 mm) or larger to move differentially with the individual sections of the building to which it is attached.

18.2.2 Flexible couplings shall be arranged to coincide with structural separations within a building.

Structural separations in a building are often intended to accommodate needs such as thermal expansion and contraction of building materials or simply to permit movement over the lifespan of the structure. If an earthquake event occurs, the structure on each side of the separation could move differently. It is important to allow for movement in the piping system as well so that the fire sprinkler system moves with the structure and would not be damaged. When a structural separation is planned, the engineer will know the maximum anticipated movement. Depending on the amount of movement, a single coupling might or might not accommodate it. Multiple couplings, swing joints, or listed expansion assemblies could be needed to handle the expected movement.

18.2.3 Systems having more flexible couplings than required by this section shall be provided with additional sway bracing as required in 18.5.5.9.

18.2.3.1 The flexible couplings shall be installed as follows:

(1)* Within 24 in. (600 mm) of the top and bottom of all risers, unless the following provisions are met:

(a) In risers less than 3 ft (900 mm) in length, flexible couplings shall be permitted to be omitted.

(b) In risers 3 ft to 7 ft (900 mm to 2100 mm) in length, one flexible coupling shall be adequate.

A.18.2.3.1(1) Risers do not include riser nipples as defined in 3.3.180.

(2) Within 12 in. (300 mm) above and within 24 in. (600 mm) below the floor in multistory buildings, unless the following provision is met:

(a)* In risers up to 7 ft (2.1 m) in length terminating above the roof assembly or top landing, the flexible coupling shall not be required above the landing or roof assembly.

EDUFIRE.IR

As it pertains to 18.2.3.1(2), typically the pipe above the roof is short, and any necessary supports for gravity load or seismic forces would be connected back to the roof structure. Therefore, there is no differential movement to require a flexible point in the piping. However, if there is a unique scenario in which the piping above the roof level is supported from or connected to a structure on the roof level, where differential movement would be expected, then the coupling should be installed so that pipe is not damaged.

N **A.18.2.3.1(2)(a)** See Figure A.18.2.3.1(2)(a).

(3) On both sides of concrete or masonry walls within 1 ft (300 mm) of the wall surface, unless clearance is provided in accordance with Section 18.4
(4)* Within 24 in. (600 mm) of building expansion joints

A.18.2.3.1(4) A building expansion joint is usually a bituminous fiber strip used to separate blocks or units of concrete to prevent cracking due to expansion as a result of temperature changes. Where building expansion joints are used, the flexible coupling is required on one side of the joint by 18.2.3.1(4). For seismic separation joints, considerably more flexibility is needed, particularly for piping above the first floor. Figure A.18.3(a) shows a method of providing additional flexibility through the use of swing joints.

It is important to remember that the requirements of Section 18.2 apply to all risers as defined in 3.3.181 and are not limited to just system risers.

(5) Within 24 in. (600 mm) of the top of drops exceeding 15 ft (4.6 m) in length to portions of systems supplying more than one sprinkler, regardless of pipe size
(6) Within 24 in. (600 mm) above and 24 in. (600 mm) below any intermediate points of support for a riser or other vertical pipe

Item (6) of 18.2.3.1 is not intended to apply to drops to a single sprinkler. A flexible coupling is not required in this case because of the concern regarding the difficulty with sprinkler installation and replacement. The lack of rotational resistance inherent in a flexible coupling can prevent the development of the torque necessary to properly install the sprinkler.

18.2.3.2 When the flexible coupling below the floor is above the tie-in main to the main supplying that floor, a flexible coupling shall be provided in accordance with one of the following:

(1)* On the horizontal portion within 24 in. (600 mm) of the tie-in where the tie-in is horizontal
(2)* On the vertical portion of the tie-in where the tie-in incorporates a riser

A.18.2.3.2(1) See Figure A.18.2.3.2(1).

A.18.2.3.2(2) The flexible coupling should be at the same elevation as the flexible coupling on the main riser. *[See Figure A.18.2.3.2(2).]*

18.2.4* Flexible Couplings for Drops. Flexible couplings for drops to hose lines, rack sprinklers, mezzanines, and free-standing structures shall be installed regardless of pipe sizes as follows:

(1) Within 24 in. (600 mm) of the top of the drop
(2) Within 24 in. (600 mm) above the uppermost drop support attachment, where drop supports are provided to the structure, rack, or mezzanine
(3) Within 24 in. (600 mm) above the bottom of the drop where no additional drop support is provided

It is not the intent of 18.2.4 to require a coupling on a drop to a single sprinkler. The specified list is for piping that will feed multiple sprinklers, at a different elevation or within a structure such as a rack.

EDUFIRE.IR

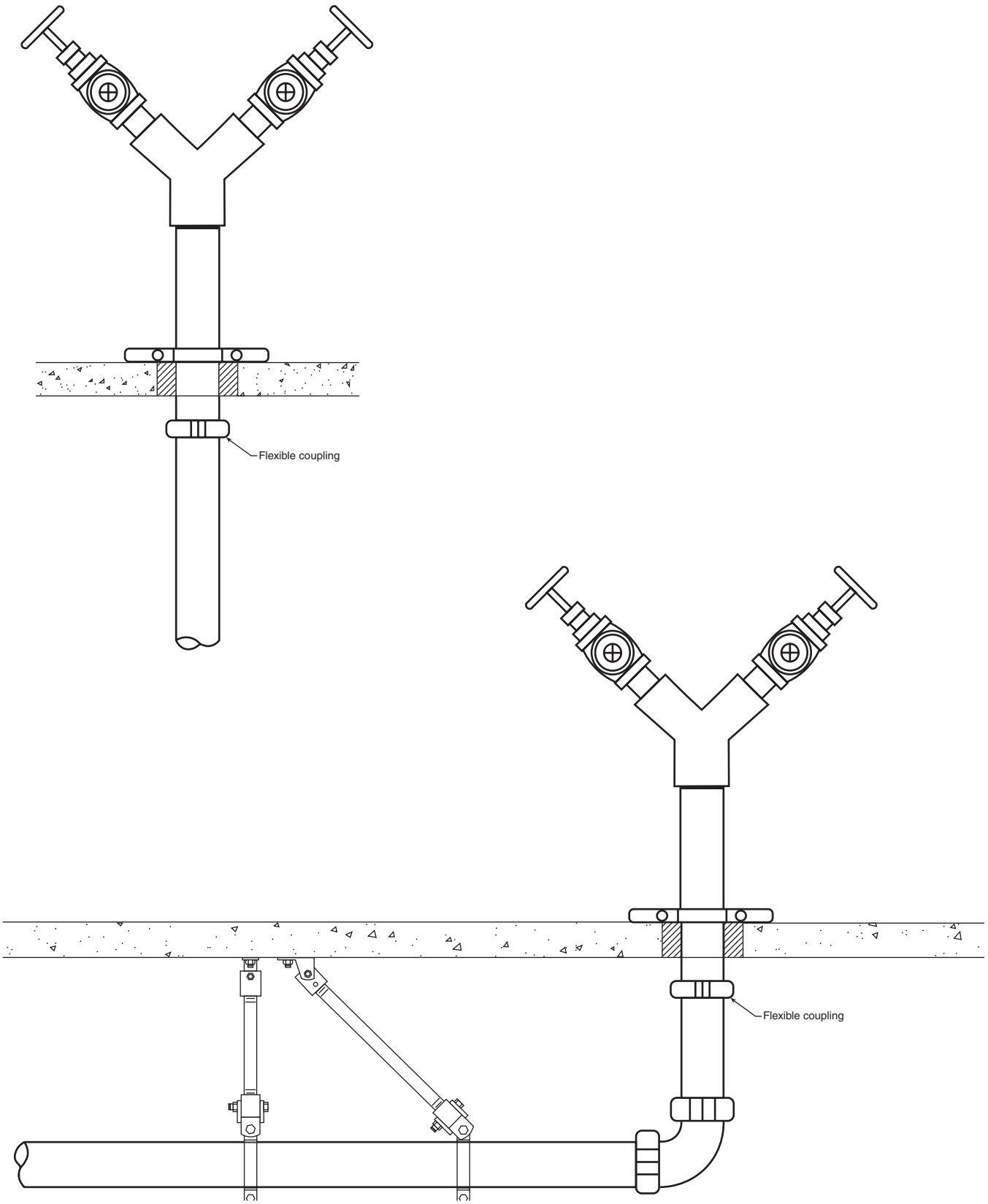

N ***FIGURE A.18.2.3.1(2)(a)*** *Flexible Coupling on Upper Landing or Roof Assembly.*

EDUFIRE.IR

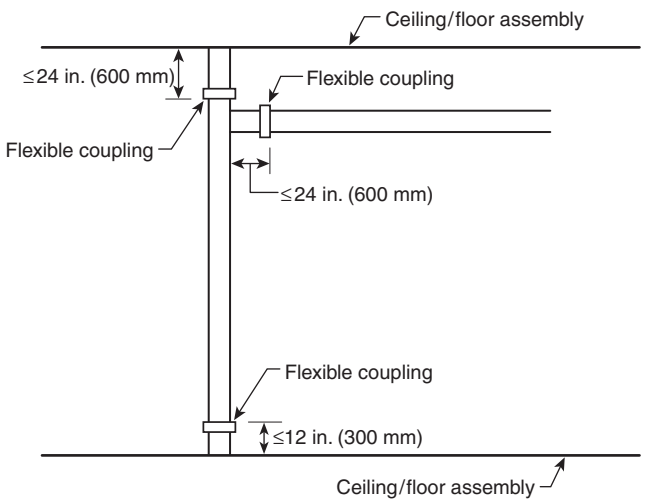

FIGURE A.18.2.3.2(1) *Flexible Coupling on Horizontal Portion of Tie-In.*

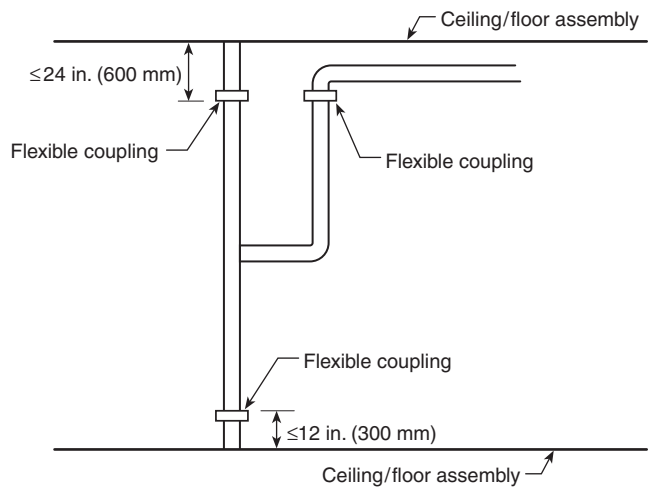

FIGURE A.18.2.3.2(2) *Flexible Coupling on Vertical Portion of Tie-In.*

A.18.2.4 See Figure A.18.2.4. Drops that extend into freestanding storage racks or other similar structures should be designed to accommodate a horizontal relative displacement between the storage rack and the overhead supply piping. Free standing structures include but are not limited to freezers, coolers, spray booths, and offices.

The horizontal relative displacement should be determined using the least value from one of the following formulas and be taken as the height of the top point of attachment to the storage rack above its base or the highest point of potential contact between the rack structure and the piping above its base, whichever is higher. The design should account for the differential movement value as determined from one of the two formulas, not both, and the lesser of the two values is acceptable. It should be determined how to account for the differential movement using flexible couplings or other approved means.

$$D = H * 0.06 * S_1 * F_v$$

or **[A.18.2.4]**

$$D = H * 0.05$$

where:

D = differential movement between the rack and the roof [ft (m)]

H = height of the top point of attachment to the rack [ft (m)]

S_1 = one second period spectral acceleration per USGS 2010 Seismic Design Maps *(see ASCE/SEI 7)*

F_v = one second period site coefficient (Site Class D)

F_v is a function of S_1 and is determined as follows:

S_1	F_v
≤0.1	2.4
=0.2	2.0
=0.3	1.8
=0.4	1.6
≥0.5	1.5

Note: Use straight-line interpolation for intermediate values of S_1.

EDUFIRE.IR

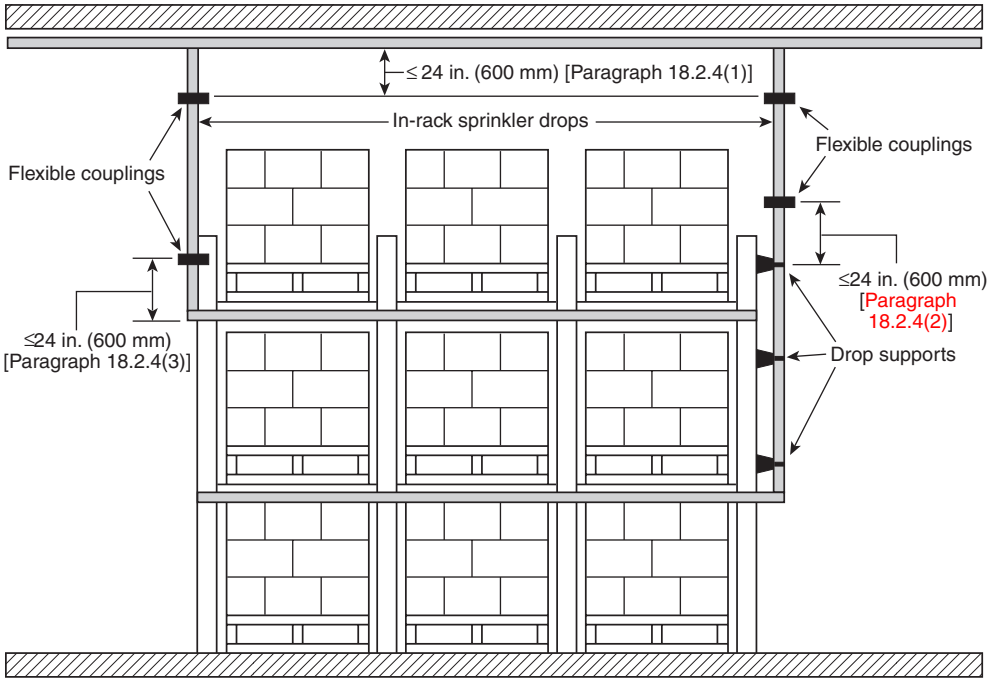

FIGURE A.18.2.4 *Flexible Couplings for Drops.*

Where racks are freestanding — that is, independent of the building structure and anchored only to the floor — their movement relative to the ceiling could be considerably greater than can be accommodated by the two flexible couplings required for drops. In many cases where ceiling sprinkler piping drops to the top of a freestanding rack, multiple flexible couplings, flexible elbows, or similar provisions are needed. Earthquake experts have suggested that the top of the rack structure could displace up to 5 percent of the rack height (the so-called 5 percent rule). That means a rack that is 30 ft 0 in. (9.1 m) high might move as much as 1 ft 6 in. (450 mm). The vertical pipe between the roof and the top of the rack would need to be able to angle over 1 ft 6 in. (450 mm) laterally, and that much deflection almost certainly would need more than just two flexible couplings.

In addition to the traditionally accepted 5 percent rule referenced in the preceding paragraph, A.18.2.4 now includes a formula that allows for the use of site-specific information. The potential rack displacement is a function of the SEI/ASCE 7 variable S_1, as opposed to S_s, which is commonly used in these provisions based on its being more appropriate for mechanical systems. S_1 is the mapped maximum considered earthquake (MCE) spectral response acceleration at a period of 1 second, as defined in Section 11.3 of SEI/ASCE 7. The use of the variable S_1 to determine rack displacement does not require a worst-case scenario to be applied to all buildings without regard to their location in a seismic zone. As a result, racks installed in buildings located in areas not subject to potentially large seismic events are not required to provide for the same potential displacement as are those located in areas where the potential for such events is much more severe.

18.3* Seismic Separation Assembly.

A.18.3 Plan and elevation views of a seismic separation assembly configured with flexible elbows are shown in Figure A.18.3(a) or Figure A.18.3(b).

The extent of permitted movement should be sufficient to accommodate calculated differential motions during earthquakes. In lieu of calculations, permitted movement can be made at least twice the actual separations, at right angles to the separation as well as parallel to it.

FAQ [18.3]

Do the requirements of Section 18.3 apply to all piping crossing seismic joints, regardless of size, including branch lines?

The seismic separation assembly is required for all piping that crosses seismic joints at ground level and above, including branch lines, without regard for pipe size.

EDUFIRE.IR

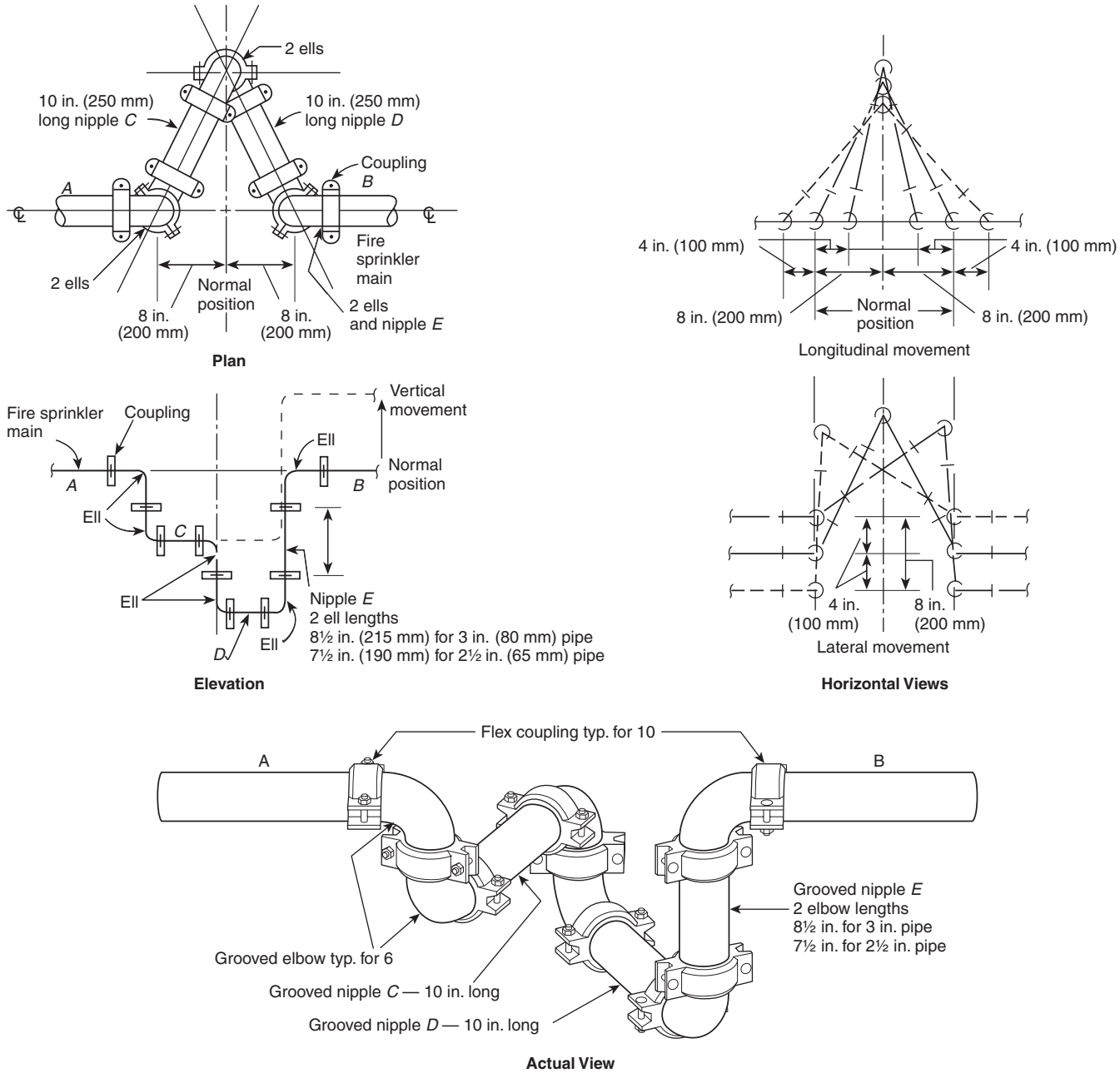

FIGURE A.18.3(a) *Seismic Separation Assembly in which 8 in. (200 mm) Separation Crossed by Pipes Up to 4 in. (100 mm) in Nominal Diameter. (For other separation distances and pipe sizes, lengths and distances should be modified proportionally.)*

If there is a 6 in. (150 mm) separation, then 12 in. (300 mm) can be assumed to be the maximum movement.

The seismic separation assembly shown in Figure A.18.3(a) or Figure A.18.3(b) is intended to provide sufficient flexibility to accommodate the substantial relative motion that can be expected at building seismic separation joints. In many cases, providing each building section with its own riser can be more economical.

The seismic separation assembly is not required on piping located below ground level. Other aspects of earthquake protection, such as bracing and restraint, are, nevertheless, required within structures

EDUFIRE.IR

located below ground level. Earthquake protection, such as bracing and restraints, are not required for pipe buried in the ground.

Several listed flexible piping assemblies, such as the one shown in Exhibit 18.2, are now available that can be used as seismic separation assemblies where they provide the intended flexibility. To meet the intended flexibility, the assemblies must be designed to allow full closure of the seismic separation, opening of the seismic separation to twice its original width, and offsets in both the vertical and the horizontal planes equal to the width of the seismic separation. There is no requirement that a listed device be used for this purpose, but the piping configuration to be used as a seismic separation assembly must be approved by the authority having jurisdiction.

18.3.1 An approved seismic separation assembly shall be installed where sprinkler piping, regardless of size, crosses building seismic separation joints at ground level and above.

18.3.2 Seismic separation assemblies shall consist of flexible fittings or flexible piping so as to allow movement sufficient to accommodate closing of the separation, opening of the separation to twice its normal size, and movement relative to the separation in the other two dimensions in an amount equal to the separation distance.

18.3.3* The seismic separation assembly shall include a four-way brace upstream and downstream within 6 ft (1.8 m) of the seismic separation assembly.

Paragraph 18.5.5.5 requires a lateral sway brace within 6 ft (1.8 m) on the end of a main. Following this same distance, it is considered short enough to effectively keep the sprinkler system on both sides of a seismic separation joint isolated from joint movement. Sway braces attached closer to a seismic joint are not required and might not be practical due to availability of building structural elements. The 6 ft (1.8 m) length of pipe between the sway brace and the seismic joint parallels that at the end of a pipe.

A.18.3.3 Each four-way brace should be attached to the building structure on opposite sides of the seismic separation joint.

18.3.4 Bracing shall not be attached to the seismic separation assembly.

The intent of sway braces on both sides of the seismic joint and no bracing on the joint is to hold the braced pipe in place and leave the seismic joint free to move as it was designed to do in all three directions of motion.

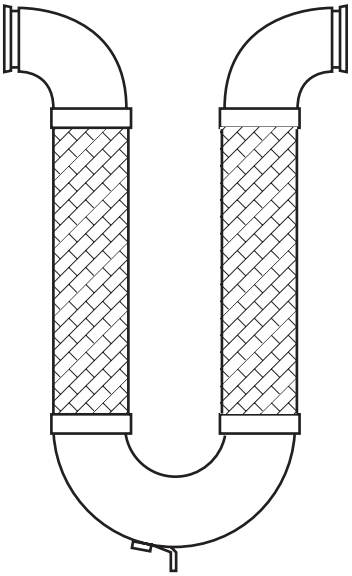

FIGURE A.18.3(b) *Seismic Separation Assembly Incorporating Flexible Piping.*

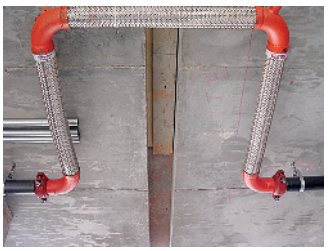

EXHIBIT 18.2 *Example of a Seismic Loop. (Courtesy of Anvil International)*

18.4* Clearance.

A.18.4 While clearances are necessary around the sprinkler piping to prevent breakage due to building movement, suitable provision should also be made to prevent passage of water, smoke, or fire.

Drains, fire department connections, and other auxiliary piping connected to risers should not be cemented into walls or floors; similarly, pipes that pass horizontally through walls or foundations should not be cemented solidly, or strains will accumulate at such points.

Where risers or lengths of pipe extend through suspended ceilings, they should not be fastened to the ceiling framing members.

In areas that use suspended ceilings and are a seismic design category of D, E, or F, a larger clearance could be necessary around the sprinkler unless the suspended ceiling is rigidly braced or flexible sprinkler hose fitting are used as noted in ASTM E580, *Standard Practice for Installation of Ceiling Suspension Systems for Acoustical Tile and Lay-in Panels in Areas Subject to Earthquake Ground Motions*.

EDUFIRE.IR

More clearance might be called for through reference standards of the building code than the clearance required by NFPA 13. The additional space is provided to avert sprinkler damage should differential movement between the ceiling and the sprinkler occur.

FAQ [18.4.1]

Can clearance be eliminated with the use of flexible couplings?

Where flexible couplings or fittings are located within 12 in. (300 mm) of both sides of such structural elements, clearance can be eliminated in accordance with 18.4.5.

18.4.1* Clearance shall be provided around all piping extending through walls, floors, platforms, and foundations, including drains, fire department connections, and other auxiliary piping.

Clearance is not required around pipes passing through successive floor joists or closely spaced beams expected to move as a unit, such as part of a ceiling/roof deck. Where piping passes through an individual beam, the beam should be treated as a structural member. As such, a clearance would be required for piping passing through a beam, unless flexible couplings are located within 1 ft (300 mm) of the beam on each side, as identified in 18.4.5. Large openings can reduce the strength of structural members, and openings in beams generally should be located only in the center one-third of the beam's depth and not close to either end of its span. The structural engineer should be consulted prior to locating holes in structural members to ensure they will retain the appropriate load capacity.

N **A.18.4.1** Penetrations with or without clearance for seismic protection also need to meet building code requirements for fire resistance ratings as applicable.

FAQ [18.4.2]

Is the intent of NFPA 13 to require the pipe to be centered within the opening?

The clearance around the pipe addressed in 18.4.2 does not need to be annular, that is, the pipe does not need to be placed in the exact center of the opening. However, the piping also should not be in contact with the edges of the hole. Annular clearance also is not required where holes through primary structural members substitute for hangers, as permitted in 17.1.7.3.

18.4.2 Unless any of the requirements of 18.4.3 through 18.4.7 or 18.4.10 are met, where pipe passes through holes in platforms, foundations, walls, or floors, the holes shall be sized such that the diameter of the holes is nominally 2 in. (50 mm) larger than the pipe for pipe 1 in. (25 mm) nominal to 3½ in. (90 mm) nominal and 4 in. (100 mm) larger than the pipe for pipe 4 in. (100 mm) nominal and larger.

18.4.3 Where clearance is provided by a pipe sleeve, a nominal diameter 2 in. (50 mm) larger than the nominal diameter of the pipe shall be acceptable for pipe sizes 1 in. (25 mm) through 3½ in. (90 mm), and the clearance provided by a pipe sleeve of nominal diameter 4 in. (100 mm) larger than the nominal diameter of the pipe shall be acceptable for pipe sizes 4 in. (100 mm) and larger.

18.4.4 No clearance shall be required for piping passing through gypsum board or equally frangible construction.

Generally, there is no concern where sprinkler piping penetrates frangible construction since the piping is not expected to be damaged by differential movement. However, where the frangible construction is part of a rated enclosure, such as an exit stair, clearance must be provided to prevent compromising the required fire integrity of the enclosure following an earthquake. Additionally, the clearance needs to be filled with flexible material that maintains the integrity of the fire resistance rating. An alternative would be to provide flexible couplings on both sides of the penetration in accordance with 18.4.5.

18.4.5 No clearance shall be required if flexible couplings are located within 1 ft (300 mm) of each side of a wall or if the requirements of 18.2.3.1(2) are met.

As with walls, flexible couplings located within 12 in. (300 mm) on each side of beams can also substitute for the required clearances.

18.4.6 No clearance shall be required where horizontal piping passes perpendicularly through successive studs or joists that form a wall or floor/ceiling assembly.

18.4.7 No clearance shall be required where nonmetallic pipe has been demonstrated to have inherent flexibility equal to or greater than the minimum provided by flexible couplings located within 1 ft (300 mm) of each side of a wall, floor, platform, or foundation.

EDUFIRE.IR

18.4.8 Where required, the clearance shall be filled with a flexible material that is compatible with the piping material.

Most building codes now require the annular space around piping penetrations through fire-rated assemblies, other than sprinkler penetrations of ceiling membranes, to be filled with an appropriate material. Listed penetration sealants are available that are tested in accordance with ASTM E814, *Test Methods for Fire Tests of Through-Penetration Firestop Systems,* and that are flexible as installed. Beginning with the 2007 edition of NFPA 13, the wording specifies that all penetration sealants must be compatible with the piping material. Compatibility is a special concern with nonmetallic pipe.

18.4.9 The installed horizontal and upward vertical clearance between horizontal sprinkler piping and structural members not penetrated or used, collectively or independently, to support the piping shall be at least 2 in. (50 mm).

The requirement in 18.4.9 for minimum 2 in. (50 mm) clearance from structural members not penetrated or used for support prevents the possibility that system components would be damaged by being pushed against rigid structural members in the event of differential movement within the building. In other words, a main supported from the roof structure would be required to be suspended at least 2 in. (50 mm) laterally from the side of a building column. In areas subject to large vertical motion from earthquake forces, upright sprinklers might need clearance above to minimize impact and possible damage to the sprinkler.

18.4.10* No clearance shall be required where piping is supported by holes through structural members as permitted by 17.1.7.3.

A.18.4.10 Figure A.18.4.10 is an example of piping supported by structure where there is no clearance required at the point of contact between the piping and structure.

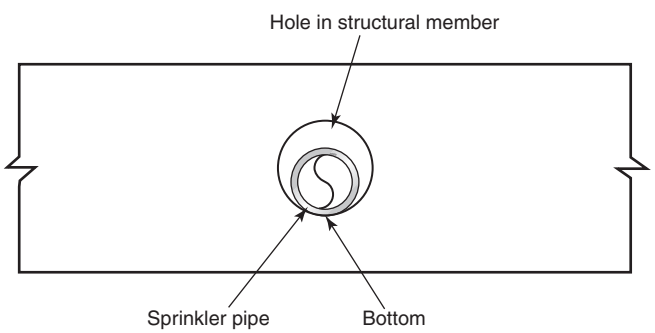

FIGURE A.18.4.10 *Pipe with Zero Clearance.*

18.4.11* The installed clearance between a sprinkler and structural elements not used collectively or independently to support the sprinklers shall be at least 3 in. (75 mm).

A.18.4.11 Structural elements include, but are not limited to, beams, girders, and trusses. Frangible ceilings should not be considered structural elements for this purpose.

18.4.11.1 Where sprinklers are installed using flexible sprinkler hose, clearance for the sprinkler shall not be required.

18.4.12 Clearance shall not be required for piping that is vertically supported by the bottom edge of holes through structural members as permitted by 17.1.7.3.

EDUFIRE.IR

18.4.13 No horizontal clearance (tight fit) shall be provided for piping that is laterally supported by the side edges of holes through structural members.

18.4.13.1 Clearance shall be permitted where piping is secured to the structural member with an approved hanger or restraint.

18.5* Sway Bracing.

Sway bracing is provided to prevent excessive movement of system piping. Shifting of large pipe as a result of earthquake motion has led to the pull-out of hangers and the fracture of fittings. With some exceptions, as specifically stated, bracing is required for the following:

1. Top of the system riser
2. All feed and cross mains or other piping regardless of size
3. Branch lines 2½ in. (65 mm) in diameter and larger (lateral bracing only)

Branch line piping 2 in. (50 mm) in diameter and smaller is considered capable of considerable movement without damage. For that reason, branch line piping 2 in. (50 mm) and smaller is only required to have a lesser degree of support than that of bracing, which is referred to as *restraint* and is separately addressed in 18.6.

NFPA 13 contains requirements for both lateral (perpendicular to the piping) and longitudinal (parallel to the piping) horizontal braces. A lateral sway brace is shown in Exhibit 18.3, and a longitudinal brace is shown in Exhibit 18.4. The traditional maximum spacing of lateral braces [40 ft (12 m)] is based on the strength of the piping as a beam under the uniform load of its expected horizontal "weight." Longitudinal braces are required at a maximum spacing of 80 ft (24 m). Beginning with the 2007 edition of NFPA 13, emphasis was placed on the fact that the maximum lateral brace spacing is dependent on the allocation of lateral loads to the piping to control displacement under seismic loading.

Lateral and longitudinal braces are "two-way" braces, that is, they prevent piping from moving back and forth in a single direction. The sway braces illustrated in Exhibit 18.3 and Exhibit 18.4 are two-way braces. Four-way bracing, as shown in Exhibit 18.5, requires the simultaneous application of lateral and longitudinal bracing.

As with system hangers, sway braces must be attached directly to the building structure. Fasteners and structural elements at the points of connection must be adequate to handle the expected loads.

The forces applied to piping during an earthquake can be vertical as well as horizontal, but vertical uplift forces are generally expected to be offset by gravity, and vertical downward forces are expected to be handled within the normal safety factors of system hangers. Where high horizontal force factors are combined with low brace angles from vertical, 18.5.10 requires the use of additional sway brace assemblies to resist net upward vertical reactions.

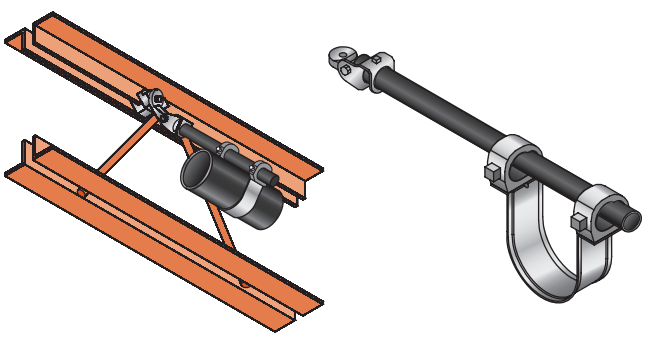

EXHIBIT 18.3 Lateral Sway Brace: (left) Brace Attached to Steel Web Joist and (right) Typical Lateral Sway Brace Assembly. (Based on artwork provided by AFCON)

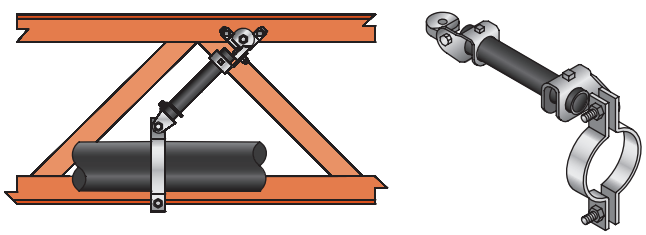

EXHIBIT 18.4 Longitudinal Sway Brace: (left) Brace Attached to Steel Web Joist and (right) Typical Longitudinal Sway Brace Assembly. (Based on artwork provided by AFCON)

EDUFIRE.IR

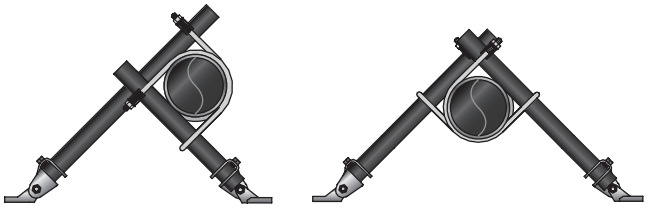

EXHIBIT 18.5 Two Typical Four-Way Sway Brace Assemblies on Vertical Sprinkler Pipe. (Based on artwork provided by AFCON)

A.18.5 Figure A.18.5(a) and Figure A.18.5(b) are examples of forms used to aid in the preparation of bracing calculations.

18.5.1 General.

18.5.1.1 The system piping shall be braced to resist both lateral and longitudinal horizontal seismic loads and to prevent vertical motion resulting from seismic loads.

The specific prevention of vertical motion is not always required. See 18.5.10 for when additional braces are required to prevent vertical motion.

18.5.1.2 The structural components to which bracing is attached shall be determined to be capable of resisting the added applied seismic loads.

18.5.1.3* Horizontal loads on system piping shall be determined in accordance with 18.5.9.

Prior to the 2007 edition, all loads in NFPA 13 were at allowable stress levels, with the exception of the buckling loads that served as the basis for Table 18.5.11.8(a) through Table 18.5.11.8(f). In the 2007 edition, the allowable loads in the tables were reduced to include a factor of safety appropriate to the use of allowable stress design and to coordinate with the model structural codes.

A.18.5.1.3 All horizontal loads given in this document are at allowable stress design levels. When performing a more advanced analysis procedure, as described in 18.1.2, care should be taken to ensure that the correct load factors (strength design or allowable stress design) are used.

18.5.1.4* A shared support structure shall be permitted to support both the gravity loads addressed in 17.1.4.1 and the seismic loads addressed in 18.5.9.

A.18.5.1.4 A shared support structure can be used to provide both support as defined in 17.1.4.1 and provide resistance to seismic forces. When a shared support structure is used for both support and seismic forces, the shared support structure should be designed to resist the seismic force for all of the distribution system. The shared support structure should be designed for a load in which the zone of influence includes the water-filled sprinkler pipe and all other distribution systems attached to the shared support structure.

18.5.1.4.1 When a shared support structure is used to support gravity and seismic loads, the structure shall be designed to support these loads for all pipe and distribution systems on the structure using either 18.5.9.3 or 18.5.9.4 with an importance factor, I_p, of 1.5 being applied to all of the distribution systems.

Where sway bracing is attached directly to a shared support structure and then the shared support structure braces the elements on the structure, it is the intent of 18.5.1.4.1 to ensure that the sway bracing is designed to treat everything on the shared support structure in terms of loads and safety factors as if it were all sprinkler pipe.

EDUFIRE.IR

Seismic Bracing Calculations

Sheet _____ of _____

Project: _____

Address: _____

_____

Contractor: _____

Address: _____

_____

Telephone: _____

Fax: _____

Brace Information

Length of brace: _____

Diameter of brace: _____

Type of brace: _____

Angle of brace: _____

Least radius of gyration:* _____

l/*r* value:* _____

Maximum horizontal load: _____

Seismic Brace Attachments

Structure attachment fitting or tension-only bracing system:

Make: _____ Model: _____

Transition attachment fitting (where applicable):

Make: _____ Model: _____

Listed load rating: _____ Adjusted load rating per 18.5.2.3: _____

Sway brace (pipe attachment) fitting:

Make: _____ Model: _____

Listed load rating: _____ Adjusted load rating per 18.5.2.3: _____

Fastener Information

Orientation of connecting surface: _____

Fastener:

Type: _____

Diameter: _____

Length (in wood): _____

Maximum load: _____

Seismic Brace Assembly Detail

(Provide detail on plans)

Brace identification no.
(to be used on plans) _____

☐ Lateral brace ☐ Longitudinal brace ☐ 4-way brace

Sprinkler System Load Calculation ($F_{pw} = C_p W_p$)

C_p = _____

Diameter	Type	Length (ft)	Total (ft)	Weight per ft	Weight
				lb/ft	lb
				lb/ft	lb
				lb/ft	lb
				lb/ft	lb
				lb/ft	lb
				Subtotal weight	lb
				W_p (incl. 15%)	lb
Main Size	Type\Sch.	Spacing (ft)		Total (F_{pw})	lb
				Maximum F_{pw} per 18.5.5.2 (if applicable)	

* Excludes tension-only bracing systems

© 2018 National Fire Protection Association

NFPA 13

FIGURE A.18.5(a) Seismic Bracing Calculation Form.

EDUFIRE.IR

Seismic Bracing Calculations

Sheet _____ of _____

Project: Acme Warehouse
Address: 321 First Street
Any City, Any State

Contractor: Smith Sprinkler Company
Address: 123 Main Street
Any City, Any State
Telephone: (555) 555-1234
Fax: (555) 555-4321

Brace Information

Length of brace: 3 ft 6 in.
Diameter of brace: 1 in.
Type of brace: Schedule 40
Angle of brace: 45° to 59°
Least radius of gyration:* 0.421
l/r value:* 100
Maximum horizontal load: 4455 lb

Seismic Brace Attachments

Structure attachment fitting or tension-only bracing system:
Make: Bolt Model: Bolt
Listed load rating: - - - Adjusted load rating per 18.5.2.3: - - -

Transition attachment fitting (where applicable):
Make: Acme Model: 123
Listed load rating: 1000 Adjusted load rating per 18.5.2.3: 707

Sway brace (pipe attachment) fitting:
Make: Acme Model: 321
Listed load rating: 1200 Adjusted load rating per 18.5.2.3: 849

Fastener Information

Orientation of connecting surface: "E"

Fastener:
Type: Through bolt
Diameter: ¾ in.
Length (in wood): 5½ in.
Maximum load: 620 lb

Seismic Brace Assembly Detail

(Provide detail on plans)

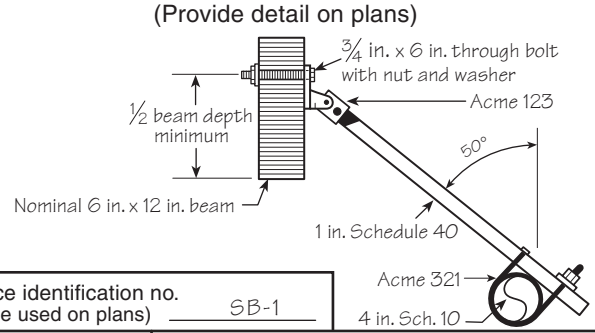

Brace identification no. (to be used on plans) SB-1

☒ Lateral brace ☐ Longitudinal brace ☐ 4-way brace

Sprinkler System Load Calculation ($F_{pw} = C_p W_p$)

C_p = 0.40

Diameter	Type	Length (ft)	Total (ft)	Weight per ft	Weight
1 in.	Sch. 40	15 ft + 25 ft + 8 ft + 22 ft	70 ft	2.05 lb/ft	143.5 lb
1¼ in.	Sch. 40	25 ft + 33 ft + 18 ft	76 ft	2.93 lb/ft	222.7 lb
1½ in.	Sch. 40	8 ft + 8 ft + 10 ft + 10 ft	36 ft	3.61 lb/ft	130.0 lb
2 in.	Sch. 40	20 ft	20 ft	5.13 lb/ft	102.6 lb
4 in.	Sch. 10	20 ft	20 ft	11.78 lb/ft	235.6 lb
				Subtotal weight	834.4 lb
				W_p (incl. 15%)	959.6 lb
Main Size	Type\Sch.	Spacing (ft)		Total (F_{pw})	383.8 lb
4 in.	Sch. 10	20 ft		Maximum F_{pw} per 18.5.5.2 (if applicable)	1634

* Excludes tension-only bracing systems

© 2018 National Fire Protection Association NFPA 13

FIGURE A.18.5(b) Sample Seismic Bracing Calculation Form.

EDUFIRE.IR

18.5.1.5* If a shared support structure is used to support sprinkler pipe and other distribution systems per 17.1.4.1 and that structure does not provide seismic resistance as required in 18.5.1.4, the following shall be met:

(1) The sprinkler pipe shall be braced using the method in 18.5.6 with the zone of influence including the water-filled sprinkler pipe and all other distribution systems that are not independently equipped with seismic protection and attached to the shared support structure.
(2) The sprinkler sway bracing attachment shall be connected to the same building or structure as the shared support structure.

Where sway bracing is attached directly to sprinkler pipe that is attached to a shared support structure, it is the intent of 18.5.1.5(1) to ensure that all tributary loads from everything attached to the shared support structure be included in the design of the sway brace as if it were sprinkler pipe.

Shared support structures, although offering convenience for installation locations, can create complications in trying to determine the necessary loads involved with seismic protection. The loads might be large, varying with the piping sizes and number of systems sharing the supports. These structures need to be planned by a professional engineer who can evaluate the risks based on the specific loading, expected forces, and the building structure.

A.18.5.1.5 It is the intent of this section to avoid any incompatibility of displacements between the shared support structure and the sprinkler seismic bracing, as might occur if the supports are located on separate adjacent structures.

18.5.1.6 Bracing requirements of Section 18.5 shall not apply to drain piping downstream of the drain valve.

Drain piping can be fixed, if necessary, after an earthquake occurs. It is important to ensure that piping up to the drain valve is protected as required in Chapter 18 so that the operation of the sprinkler system will not be affected by a broken or ruptured pipe.

18.5.2 Listing.

18.5.2.1 Sway bracing assemblies shall be listed for a maximum load rating, unless the requirements of 18.5.2.2 are met.

18.5.2.2 Where sway bracing utilizing pipe, angles, flats, or rods as shown in Table 18.5.11.8(a) through Table 18.5.11.8(f) is used, the components shall not require listing.

FAQ [18.5.2.2.1]

What is the most common cause of earthquake bracing failure?

The most common cause of earthquake bracing failure is the overloading of fasteners at the point of connection to the building structure.

18.5.2.2.1 Bracing fittings and connections used with those specific materials shall be listed.

Sway brace components, other than pipes, angles, flats, and rods, must be listed. These components include the brace fittings that attach to the pipe and to the building structure. Listings of the brace components include a maximum horizontal load. The listed loads are to be reduced in accordance with Table 18.5.2.3 for braces configured at less than 90 degrees from vertical. This reduction is consistent with the reductions built into Table 18.5.11.8(a) through Table 18.5.11.8(f), and Figure 18.5.12.1 and Table 18.5.12.2(a) through Table 18.5.12.2(j) for brace members and fasteners. The listing requirement ensures that the fitting is able to support the necessary loads and that the materials show strength and durability.

Sway brace fitting manufacturers generally make available special brackets that allow multiple fasteners to be used to connect the end of the brace to the building structure. These brackets allow the attachment load to be increased because they can distribute the load. If the load cannot be accommodated by multiple fasteners, additional braces should be added, which can reduce the load on each fastener.

18.5.2.3* The listed load rating shall be reduced as shown in Table 18.5.2.3 to determine the allowable load for installations where the brace is less than 90 degrees from vertical.

EDUFIRE.IR

The allowable horizontal load rating will be listed on the manufacturer's cut sheet. This is the load that must be reduced in accordance with 18.5.2.3. There are some manufacturers who have tested and listed their products with an allowable load at any angle, not just at the horizontal allowable load. If the brace element's cut sheet specifies that it has an allowable load for any angle, then the allowable load from the manufacturer would not need to be divided according to 18.5.2.3. These referenced loads apply only to allowable horizontal loads.

TABLE 18.5.2.3 *Listed Horizontal Load Adjustment*

Brace Angle Degrees from Vertical	*Allowable Horizontal Load*
30 to 44	Listed load rating divided by 2.000
45 to 59	Listed load rating divided by 1.414
60 to 89	Listed load rating divided by 1.155
90	Listed load rating

A.18.5.2.3 The listed load rating should include a minimum safety factor of 2.2 against the ultimate break strength of the brace components and then be further reduced according to the brace angles.

18.5.2.3.1* Maximum allowable horizontal loads shall be determined by testing at angles of 30, 45, 60, and 90 degrees from vertical and confirmed to be equal to or greater than those calculated using 18.5.2.3.

The requirement in 18.5.2.3.1 and its Annex A material were added for the 2016 edition to require actual testing of the sway brace fitting at different angles. Previously, sway brace fittings were tested only at the 90-degree orientation to determine a listed load rating. The geometry of some configurations has indicated a need for testing the arrangements in multiple positions.

A.18.5.2.3.1 Depending on the configuration of bracing fittings and connections, it is not always the case that the weakest component of a brace assembly tested at a brace angle of 90 degrees will be the same or will fail in the same way as the weakest component when tested at other brace angles. Therefore, determining an allowable horizontal load using the factors in Table 18.5.2.3 and a listed load rating established solely by testing along the brace assembly at 90 degrees might not be conservative. In most cases, a single listed load rating can be determined by testing the brace assembly at angles of 30, 45, 60, and 90 degrees, reducing the horizontal force at failure found for each of these angles by an appropriate safety factor and then resolving the resulting maximum allowable horizontal loads to a direction along the brace, and finally taking the minimum of these values along the brace assembly as the listed load rating. By taking the minimum value so determined as the listed load rating, allowable horizontal loads determined using Table 18.5.2.3 will be conservative. In some cases, and where justified by engineering judgment, fewer or additional tests might be needed to establish a listed load rating.

18.5.2.3.2 For attachments to structures, additional tests shall be performed at 0 degrees.

18.5.3 Component Material.

18.5.3.1 Unless permitted by 18.5.3.2, components of sway brace assemblies shall be ferrous.

18.5.3.2 Nonferrous components that have been proven by fire tests to be adequate for the hazard application, that are listed for this purpose, and that are in compliance with the other requirements of this section shall be acceptable.

EDUFIRE.IR

18.5.4 Sway Bracing Design.

18.5.4.1 Sway braces shall be designed to withstand forces in tension and compression, unless the requirements of 18.5.4.2 are met.

18.5.4.2* Tension-only bracing systems shall be permitted for use where listed for this service and where installed in accordance with their listing limitations, including installation instructions.

NFPA 13 permits tension-only bracing systems only if they are specially investigated and listed for such service. The systems must be installed in conformance with all requirements of their listings. Tension-only bracing systems are not to be confused with the wire-restraint method permitted by 18.6.1(3). Tension-only bracing systems are illustrated in Exhibit 18.6.

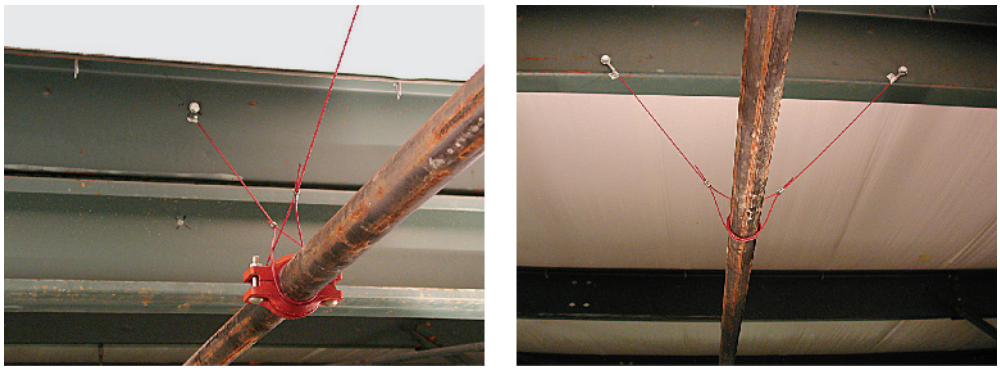

EXHIBIT 18.6 Examples of Tension-Only Bracing System Providing Different Types of Bracing: (left) Longitudinal Bracing and (right) Lateral Bracing. (Courtesy of Loos & Co., Inc.)

A.18.5.4.2 The investigation of tension-only bracing using materials, connection methods, or both, other than those described in Table 18.5.11.8(a) through Table 18.5.11.8(f), should involve consideration of the following:

(1) Corrosion resistance.
(2) Prestretching to eliminate permanent construction stretch and to obtain a verifiable modulus of elasticity.
(3) Color coding or other verifiable marking of each different size cable for field verification.
(4) The capacity of all components of the brace assemblies, including the field connections, to maintain the manufacturer's minimum certified break strength.
(5) Manufacturer's published design data sheets/manual showing product design guidelines, including connection details, load calculation procedures for sizing of braces, and the maximum recommended horizontal load-carrying capacity of the brace assemblies including the associated fasteners as described in Figure 18.5.12.1. The maximum allowable horizontal loads must not exceed the manufacturer's minimum certified break strength of the brace assemblies, excluding fasteners, after taking a safety factor of 2.2 and then adjusting for the brace angle.
(6) Bracing product shipments accompanied by the manufacturer's certification of the minimum break strength and prestretching and installation instructions.
(7) The manufacturer's literature, including any special tools or precautions required to ensure proper installation.
(8) A means to prevent vertical motion due to seismic forces when required.

Table A.18.5.4.2 identifies standards for specially listed tension-only bracing systems.

EDUFIRE.IR

TABLE A.18.5.4.2 Specially Listed Tension-Only Seismic Bracing

Materials and Dimensions	*Standard*
Manual for Structural Application of Steel Cables	ASCE 19
Wire Rope Users Manual of the Wire Rope Technical Board	—
Mechanical Strength Requirements	ASTM A603
Small Diameter Steel Cable for Bracing	ASTM A1023
Breaking Strength Failure Testing	ASTM E8

18.5.4.3 For all braces, whether or not listed, the maximum allowable load shall be based on the weakest component of the brace with safety factors.

Any brace is only as strong as its weakest element, whether that is the brace itself, the brace fitting connecting the pipe, the brace fitting connecting the brace to the building, or the fasteners used for the connections of the brace fittings. Safety factors are incorporated into the values assigned to listed brace components and into the tabular values provided in this standard.

18.5.5 Lateral Sway Bracing.

18.5.5.1* Lateral sway bracing shall be provided on all feed and cross mains regardless of size and all branch lines and other piping with a diameter of 2½ in. (65 mm) and larger.

For branch line and other piping smaller than 2½ in. (65 mm), bracing is not required but line restraint is. Branch lines 2 in. (50 mm) in diameter and smaller are considered to have sufficient flexibility to avoid damage under their own momentum. Mains or other piping, however, also carry the loads of any adjacent branch lines and must be braced, regardless of size. There is clarification that bracing is not required for 2½ in. (65 mm) starter pieces — that is, the first section of pipe on branch lines from a cross main — provided they do not exceed 12 ft (3.7 m) in length (see 18.5.5.4). Note also that where high seismic loads are expected, bracing can be used on branch lines less than 2½ in. (65 mm) in diameter to reduce the zone of influence for the lateral braces on the mains.

SEE ALSO

The commentary following A.18.5.9 for more information about the horizontal forces and zone of influence.

A.18.5.5.1 A brace assembly includes the brace member, the attachment components to pipe and building, and their fasteners. There are primarily two considerations in determining the spacing of lateral earthquake braces in straight runs of pipe: (1) deflection and (2) stress. Both deflection and stress tend to increase with the spacing of the braces. The larger the midspan deflection, the greater the chance of impact with adjacent structural/nonstructural components. The higher the stress in the pipe, the greater the chance of rupture in the pipe or coupling. Braces are spaced to limit the stresses in the pipe and fittings to the levels permitted in modern building codes, with an upper limit of 40 ft (12.2 m). The braces also serve to control deflection of the pipe under earthquake loads. In the longitudinal direction, there is no deflection consideration, but the pipe must transfer the load to the longitudinal braces without inducing large axial stresses in the pipe and the couplings.

18.5.5.1.1 Where branch lines are not provided with lateral sway bracing, they shall be provided with restraint in accordance with Section 18.6.

18.5.5.2* The spacing between lateral sway braces shall be in accordance with either Table 18.5.5.2(a) through Table 18.5.5.2(l) or 18.5.5.3, based on the piping material of the sprinkler system.

A.18.5.5.2 The sway brace spacings in Table 18.5.5.2(a) through Table 18.5.5.2(l) were developed to allow designers to continue to use familiar concepts, such as zone of influence, to lay out and proportion braces while ensuring compatibility with modern seismic requirements.

EDUFIRE.IR

TABLE 18.5.5.2(a) *Maximum Load (F_{pw}) in Zone of Influence (lb), (F_y = 30 ksi) Schedule 10 Steel Pipe*

Diameter of Pipe (in.) Being Braced	Lateral Sway Brace Spacing (ft)				
	20	25	30	35	40
1	111	89	73	63	52
1¼	176	141	116	99	83
1½	241	193	158	136	114
2	390	312	256	219	183
2½	641	513	420	360	301
3	966	773	633	543	454
3½	1281	1025	840	720	603
4	1634	1307	1071	918	769
5	2814	2251	1844	1581	1324
6 and larger*	4039	3231	2647	2269	1900

Note: ASTM A106 Grade B or ASTM A53 Grade B has an F_y = 35 ksi. An F_y = 30 ksi was used as a conservative value to account for differences in material properties as well as other operational stresses.

*Larger diameter pipe can be used when justified by engineering analysis.

TABLE 18.5.5.2(b) *Maximum Load (F_{pw}) in Zone of Influence (kg), (F_y = 207 N/mm²) Schedule 10 Steel Pipe*

Diameter of Pipe (mm) Being Braced	Lateral Sway Brace Spacing (m)				
	6.1	7.6	9.1	11	12
25	50	40	33	29	24
32	80	64	53	45	38
40	109	88	72	62	52
50	177	142	116	99	83
65	291	233	191	163	137
80	438	351	287	246	206
90	581	465	381	327	273
100	741	593	486	416	349
125	1276	1021	836	717	601
150*	1832	1466	1201	1029	862

Note: ASTM A106 Grade B or ASTM A53 Grade B has an F_y = 241 N/mm². An F_y = 207 N/mm² was used also as a conservative value to account for differences in material properties as well as other operational stresses.

*Larger diameter pipe can be used when justified by engineering analysis.

TABLE 18.5.5.2(c) *Maximum Load (F_{pw}) in Zone of Influence (lb), (F_y = 30 ksi) Schedule 40 Steel Pipe*

Diameter of Pipe (in.) Being Braced	Lateral Sway Brace Spacing (ft)				
	20	25	30	35	40
1	121	97	79	68	57
1¼	214	171	140	120	100
1½	306	245	201	172	144
2	520	416	341	292	245
2½	984	787	645	553	463
3	1597	1278	1047	897	751
3½	2219	1775	1455	1247	1044
4	2981	2385	1954	1675	1402
5	5061	4049	3317	2843	2381
6 and larger*	7893	6314	5173	4434	3713

Note: ASTM A106 Grade B or ASTM A53 Grade B has an F_y = 35 ksi. An F_y = 30 ksi was used as a conservative value to account for differences in material properties as well as other operational stresses.

*Larger diameter pipe can be used when justified by engineering analysis.

TABLE 18.5.5.2(d) *Maximum Load (F_{pw}) in Zone of Influence (kg), (F_y = 207 N/mm²) Schedule 40 Steel Pipe*

Diameter of Pipe (in.) Being Braced	Lateral Sway Brace Spacing (m)				
	6.1	7.6	9.1	11	12
25	55	44	36	31	26
32	97	78	63	54	45
40	139	111	91	78	65
50	236	189	155	132	111
65	446	357	293	251	210
80	724	580	475	407	341
90	1007	805	660	566	474
100	1352	1082	886	760	636
125	2296	1837	1505	1290	1080
150*	3580	2864	2346	2011	1684

Note: ASTM A106 Grade B or ASTM A53 Grade B has an F_y = 241 N/mm². An F_y = 207 N/mm² was used also as a conservative value to account for differences in material properties as well as other operational stresses.

*Larger diameter pipe can be used when justified by engineering analysis.

The spacing of braces was determined using the provisions of ASCE/SEI 7, *Minimum Design Loads for Buildings and Other Structures*, assuming steel pipe with threaded or grooved connections for Table 18.5.5.2(a) through Table 18.5.5.2(f). The tabulated values are based on conservative simplifying assumptions. A detailed engineering analysis, taking into account the properties of the specific system, might provide greater spacing. However, in order to control deflections, in no case should the lateral sway brace spacing exceed 40 ft (12.2 m).

EDUFIRE.IR

TABLE 18.5.5.2(e) *Maximum Load (F_{pw}) in Zone of Influence (lb), (F_y = 30 ksi) Schedule 5 Steel Pipe*

Diameter of Pipe (in.) Being Braced	Lateral Sway Brace Spacing (ft)				
	20	25	30	35	40
1	71	56	46	40	33
1¼	116	93	76	65	55
1½	154	124	101	87	73
2	246	197	161	138	116
2½	459	367	301	258	216
3	691	552	453	388	325
3½	910	728	597	511	428
4*	1160	928	760	652	546

Note: ASTM A106 Grade B or ASTM A53 Grade B has an F_y = 35 ksi. An F_y = 30 ksi was used as a conservative value to account for differences in material properties as well as other operational stresses.

*Larger diameter pipe can be used when justified by engineering analysis.

TABLE 18.5.5.2(f) *Maximum Load (F_{pw}) in Zone of Influence (kg), (F_y = 207 N/mm²) Schedule 5 Steel Pipe*

Diameter of Pipe (mm) Being Braced	Lateral Sway Brace Spacing (m)				
	6.1	7.6	9.1	11	12
25	32	25	21	18	15
32	53	42	34	29	25
40	70	56	46	39	33
50	112	89	73	63	53
65	208	166	137	117	98
80	313	250	205	176	147
90	413	330	271	232	194
100*	526	421	345	296	248

Note: ASTM A106 Grade B or ASTM A53 Grade B has an F_y = 241 N/mm². An F_y = 207 N/mm² was used also as a conservative value to account for differences in material properties as well as other operational stresses.

*Larger diameter pipe can be used when justified by engineering analysis.

TABLE 18.5.5.2(g) *Maximum Load (F_{pw}) in Zone of Influence (lb), (F_y = 8 ksi) CPVC Pipe*

Diameter of Pipe (in.) Being Braced	Lateral Sway Brace Spacing (ft)				
	20	25	30	35	40
¾	15	12	10	8	7
1	28	22	18	15	13
1¼	56	45	37	30	26
1½	83	67	55	45	39
2	161	129	105	87	76
2½	286	229	188	154	135
3	516	413	338	278	243

TABLE 18.5.5.2(h) *Maximum Load (F_{pw}) in Zone of Influence (kg), (F_y = 55 N/mm²) CPVC Pipe*

Diameter of Pipe (in.) Being Braced	Lateral Sway Brace Spacing (m)				
	6.1	7.6	9.1	11	12
20	7	5	5	4	3
25	13	10	8	7	6
32	25	20	17	14	12
40	38	30	25	20	18
50	73	59	48	39	34
65	130	104	85	70	61
80	234	187	153	126	110

TABLE 18.5.5.2(i) *Maximum Load (F_{pw}) in Zone of Influence (lb), (F_y = 30 ksi) Type M Copper Tube (with Soldered Joints)*

Diameter of Pipe (in.) Being Braced	Lateral Sway Brace Spacing (ft)				
	20	25	30	35	40
¾	16	13	10	9	8
1	29	24	19	16	14
1¼	53	42	35	28	25
1½	86	69	56	46	41
2*	180	144	118	97	85

*Larger diameter pipe can be used when justified by engineering analysis.

TABLE 18.5.5.2(j) *Maximum Load (F_{pw}) in Zone of Influence (kg), (F_y = 3207 N/mm²) Type M Copper Tube (with Soldered Joints)*

Diameter of Pipe (in.) Being Braced	Lateral Sway Brace Spacing (m)				
	6.1	7.6	9.1	11	12
20	7.3	5.9	5	4.1	3.6
25	13.2	10.9	8.6	7.3	6.4
32	24	19.1	15.9	12.7	11.3
40	39	31.3	25.4	20.9	18.6
50*	81.6	65.3	53	44	38.6

*Larger diameter pipe can be used when justified by engineering analysis.

EDUFIRE.IR

TABLE 18.5.5.2(k) *Maximum Load (F_{pw}) in Zone of Influence (lb), (F_y = 9 ksi) Type M Copper Tube (with Brazed Joints)*

	Lateral Sway Spacing (ft)				
Diameter of Pipe (in.) Being Braced	**20**	**25**	**30**	**35**	**40**
¾	6	5	4	3	3
1	11	9	7	6	5
1¼	20	16	13	12	10
1½	33	27	22	19	16
2*	70	56	46	39	33

*Larger diameter pipe can be used when justified by engineering analysis.

TABLE 18.5.5.2(l) *Maximum Load (F_{pw}) in Zone of Influence (lb), (F_y = 9 ksi) Red Brass Pipe (with Brazed Joints)*

	Lateral Sway Spacing (ft)				
Diameter of Pipe (in.) Being Braced	**20**	**25**	**30**	**35**	**40**
¾	34	27	22	19	16
1	61	49	40	35	29
1¼	116	93	76	65	55
1½	161	129	105	90	76
2*	272	218	178	153	128

*Larger diameter pipe can be used when justified by engineering analysis.

SEE ALSO

Annex E, which describes further the basis of the values in the tables.

The traditional maximum brace spacing of 40 ft (12 m) still applies, but in situations involving high lateral forces or heavy branch lines, the maximum spacing might need to be reduced in accordance with Table 18.5.5.2(a) through Table 18.5.5.2(l). This reduction is in recognition of the fact that maximum lateral brace spacing is related to the beam strength of the piping and represents an attempt to limit maximum pipe deflection as well as pipe stress. The tables included in this standard are based on generic ASTM pipe standards. Through the years, additional piping materials have been incorporated so that commonly used piping information is available for users.

Beginning in 2003, efforts have been made to correlate the support and seismic protection for fire sprinkler systems with the SEI/ASCE 7, which is commonly referenced by model building codes. NFPA 13 has adopted the SEI/ASCE 7 approach to convert strength design to allowable stress design by multiplying by a factor of 0.7. This is also important to apply if the horizontal load is being determined from SEI/ASCE 7 in accordance with 18.5.9.4.

18.5.5.2.1 Specially listed nonstandard pipe shall be permitted using the values in Table 18.5.5.2(e) and Table 18.5.5.2(f) or with values provided by the manufacturer.

Some specially listed steel pipe is marketed using unofficial schedules, such as Schedule 7. Paragraph 18.5.5.2.1 allows spacing of braces for such pipe to be in accordance with the table for Schedule 5 pipe or in accordance with values provided by the manufacturer. Values for steel pipe with wall thickness between Schedule 10 and Schedule 40 would be expected to lie between the values given in those respective tables. However, it is best to consult manufacturer information.

18.5.5.2.2 Spacing shall not exceed a maximum interval of 40 ft (12 m) on center.

18.5.5.2.3 The maximum permissible load in the zone of influence of a sway brace shall not exceed the values given in Table 18.5.5.2(a) through Table 18.5.5.2(l) or the values calculated in accordance with 18.5.5.3.

18.5.5.2.4 When determining permissible loads in accordance with 18.5.5.2 or 18.5.5.2.1 on a main with varying sizes, the allowable load shall be based on the smallest pipe size within the zone of influence.

When the diameter of a main within the zone of influence changes, the smallest diameter should be considered in the application of the load tables referenced in this section for lateral sway bracing. This ensures that the load will not damage the section of piping by deflecting too far.

18.5.5.3 The maximum load (F_{pw}) in the zone of influence for specially listed pipe shall be calculated. *(See Annex E.)*

For specially listed pipe not addressed prior to this paragraph, 18.5.5.3 allows consideration of maximum seismic loads using the reference to SEI/ASCE 7, as discussed in Annex E.

EDUFIRE.IR

18.5.5.4 The requirements of 18.5.5.1 shall not apply to 2½ in. (65 mm) starter pieces that do not exceed 12 ft (3.7 m) in length.

18.5.5.5 The distance between the last brace and the end of the pipe shall not exceed 6 ft (1.8 m).

In editions of NFPA 13 prior to 2007, the last lateral brace could be as far as 20 ft (6.1 m) from the end of a main, although it was also required to be located on the last length of pipe. The requirement that the last lateral brace be within 6 ft (1.8 m) of the end of the main eliminates the potential for a large cantilevered load caused by branch lines beyond the last brace. The end of the pipe, however, is different from a change in direction of the piping. These are handled separately, since a change in direction (see 18.5.5.6 and 18.5.7) does not result in a cantilevered piece.

18.5.5.6 Where there is a change in direction of the piping, the cumulative distance between consecutive lateral sway braces shall not exceed the maximum permitted distance in accordance with 18.5.5.2.2.

18.5.5.7 The last length of pipe at the end of a feed or cross main shall be provided with a lateral brace.

18.5.5.8 Lateral braces shall be allowed to act as longitudinal braces if they are within 24 in. (600 mm) of the centerline of the piping braced longitudinally and the lateral brace is on a pipe of equal or greater size than the pipe being braced longitudinally.

Where a lateral brace also acts as a longitudinal brace, care must be given to address the combined total seismic load from both lateral and longitudinal pipe being braced. The lateral braces on smaller diameter mains should not be expected to serve as longitudinal bracing for adjacent mains of larger diameter. This could create too much load on the smaller diameter sway brace assembly.

18.5.5.9 Where flexible couplings are installed on mains other than as required in Section 18.2, a lateral brace shall be provided within 24 in. (600 mm) of every other coupling, including flexible couplings at grooved fittings, but not more than 40 ft (12 m) on center.

The intent of 18.5.5.9 is to prevent excessive movement of the mains, which could result in a bellows or accordion effect. Bracing is not required near every flexible coupling but near every other flexible coupling. This additional bracing is not required where rigid-type mechanical couplings are used. Rigid-type mechanical couplings are those not meeting the definition of the term *flexible coupling* in 3.3.78.

The requirement of 18.5.5.9 applies only to horizontal mains and branch lines required to be braced. It does not apply to other branch lines or to vertical piping such as risers or system risers.

18.5.5.10* The lateral sway bracing required by 18.5.5 shall be permitted to be omitted when 18.5.5.10.1 for branch lines or 18.5.5.10.2 for mains is met.

Although the 1994 edition of NFPA 13 also permitted omission of longitudinal sway bracing for mains supported by rods less than 6 in. (150 mm) in length, experience with the 1994 Northridge, California, earthquake showed that such omission is inappropriate. Therefore, longitudinal sway bracing is required for mains by 18.5.6 even where supported by rods less than 6 in. (150 mm) in length.

Lateral sway bracing is permitted to be omitted for pipes supported by rods less than 6 in. (150 mm) in length. Short hangers are expected to limit movement that could result in damage-inducing momentum. The types of hangers used should be able to withstand horizontal earthquake loads and should not be brittle or otherwise highly susceptible to fatigue failure. Note that this length is more stringent than the 12 in. (300 mm) hanger exception permitted by SEI/ASCE 7 and similar codes for other types of mechanical systems. The NFPA 13 requirement, however, is supported by actual earthquake experience.

A.18.5.5.10 This does not apply to piping supported by or suspended from trapeze hangers.

EDUFIRE.IR

CLOSER LOOK [18.5.5.8]

How to Calculate Zone of Influence

Here the user will determine the seismic force that must be controlled by sway brace A. Longitudinal sway braces have been added to the lines. Because of this, the branch line load will not have to be added to the lateral sway brace load calculation included for brace A. Brace A is within 24 in. (600 mm) of the change in direction; therefore, 18.5.5.8 permits it to also serve as a longitudinal sway brace to the 4 in. (100 mm) main.

Note that as required by 18.5.5.8, brace A is being attached to the same size or larger size of the two pipes. Because brace A is serving as both a lateral brace to the 6 in. (150 mm) cross main and a longitudinal sway brace to the 4 in. (100 mm) bulk main, both mains must be included in the sway brace load calculation. It is a common oversight to neglect to add both the longitudinal load and the lateral load when a sway brace serves as both a lateral and a longitudinal brace. As shown in the completed form, the zone of influence (F_{pw}) is 768.6 lb.(158 kg). See also the calculation table that follows.

Seismic Bracing Calculations Sheet 1 of 1

Project: NFPA Handbook Example
Address: 501 W. Southern Ave.
Orange California 92865

Contractor: Smith Sprinkler Company
Address: 123 Main Street
Any City, Any State
Telephone: (555) 555-1234
Fax: (555) 555-4321

Brace Information

Length of brace: _____
Diameter of brace: _____
Type of brace: _____
Angle of brace: _____
Least radius of gyration:* _____
l/r value:* _____
Maximum horizontal load: _____

Seismic Brace Attachments

Structure attachment fitting or tension-only bracing system:
Make: _____ Model: _____
Transition attachment fitting (where applicable):
Make: _____ Model: _____
Listed load rating: _____ Adjusted load rating per 9.3.5.2.4: _____
Sway brace (pipe attachment) fitting:
Make: _____ Model: _____
Listed load rating: _____ Adjusted load rating per 9.3.5.2.4: _____

Fastener Information

Orientation of conecting surface: _____
Fastener:
Type: _____
Diameter: _____
Length (in wood): _____
Maximum load: _____

Seismic Brace Assembly Detail
(Provide detail on plane)

Brace idenification no. (to be used on plan) _____

☐ Lateral brace ☐ Longitudinal brace ☐ 4-way brace

Sprinkler System Load Calculation ($F_{pw} = C_p W_p$)
C_p = 0.70

Diameter	Type	Length (ft)	Total (ft)	Weight per ft	Weight
6 in.	Schedule 10	21 ft	21 ft	23.03 lb/ft	483.6 lb
4 in.	Schedule 10	40 ft	40 ft	11.78 lb/ft	471.2 lb
				lb/ft	lb
				lb/ft	lb
				lb/ft	lb
				Subtotal weight	954.8 lb
				W_p (incl. 15%)	1098.0 lb
				Total (F_{pw})	768.6 lb
				Maximum F_{pw} per 9.3.5.5.2 (if applicable)	

* Excludes tension-only bracing systems
© 2015 National Fire Protection Association NFPA 13

Seismic Bracing Calculations Form: Sprinkler System Load Calculation.

EDUFIRE.IR

CLOSER LOOK [18.5.5.8] *Continued*

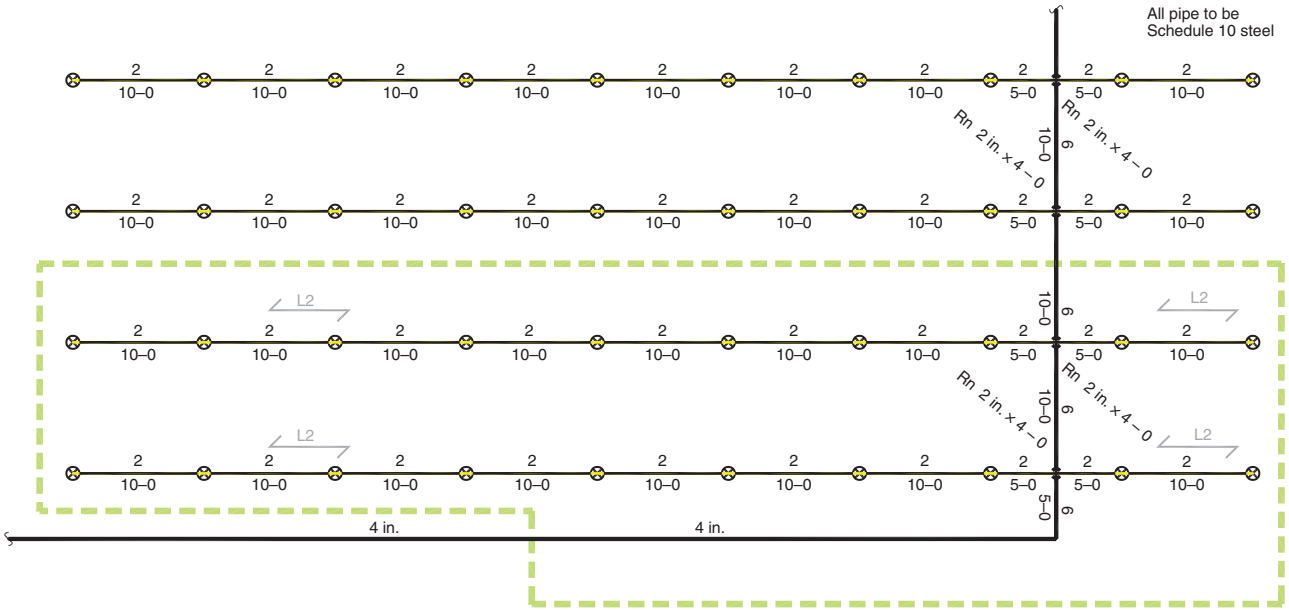

Zone of Influence Table					
6″	Sch 10	21 ft	21 ft	23.03 lbs/ft	483.6 lbs
4″	Sch 10	40 ft	40 ft	11.78 lbs/ft	471.2 lbs
		Subtotal			954.8 lbs
		W_p with 15%			1098.0 lbs
		F_{pw}			768.6 lbs

18.5.5.10.1 Branch lines shall comply with the following:

(1)* The branch lines shall be individually supported within 6 in. (150 mm) of the structure, measured between the top of the pipe and the point of attachment to the building structure.

(2) At least 75 percent of all the hangers on the branch line shall meet the requirements of 18.5.5.10.1(1).

(3) Consecutive hangers on the branch line shall not be permitted to exceed the limitation in 18.5.5.10.1(1).

Exempting lateral sway braces with short hangers has been met with some concern. Paragraphs 18.5.5.10.1 and A.18.5.5.10.1(1) provide additional clarification on the minimum requirements for the short rod exception.

A.18.5.5.10.1(1) Figure A.18.5.5.10.1(1)(a) and Figure A.18.5.5.10.1(1)(b) are examples of how to measure the distance between the top of pipe and the point of attachment.

18.5.5.10.2 Mains shall comply with all the following:

(1)* The main piping shall be individually supported within 6 in. (150 mm) of the structure, measured between the top of the pipe and the point of attachment to the building structure.

EDUFIRE.IR

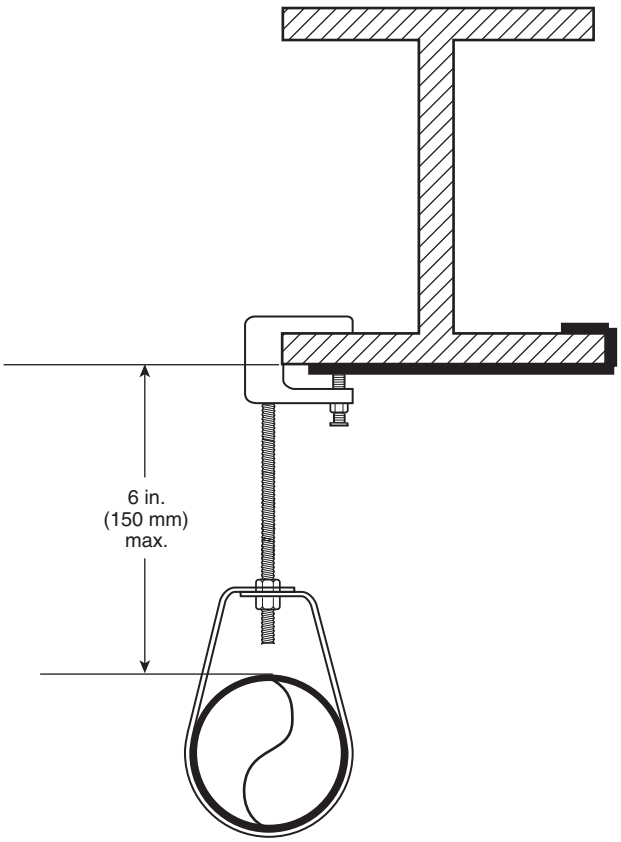

FIGURE A.18.5.5.10.1(1)(a) *Measurement for Distance Between Top of Pipe and Point of Attachment (Example 1).*

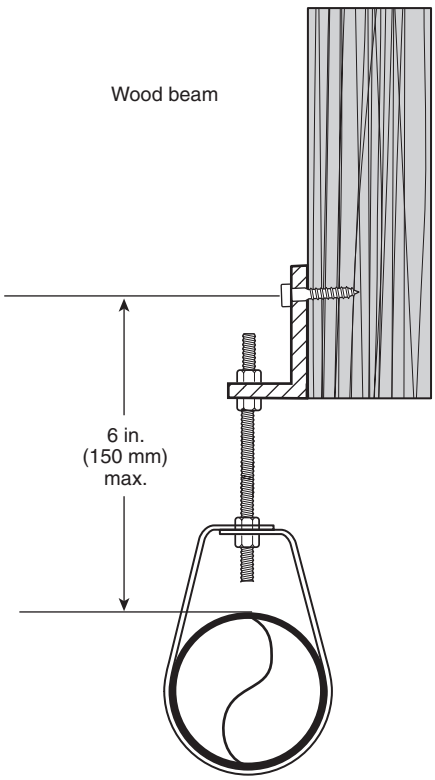

FIGURE A.18.5.5.10.1(1)(b) *Measurement for Distance Between Top of Pipe and Point of Attachment (Example 2).*

A.18.5.5.10.2(1) See Figure A.18.5.5.10.1(1)(a) and Figure A.18.5.5.10.1(1)(b).

(2) At least 75 percent of all the hangers on the main shall meet the requirements of 18.5.5.10.2(1).
(3) Consecutive hangers on the main shall not be permitted to exceed the limitation in 18.5.5.10.2(1)
(4) The seismic coefficient (C_p) shall not exceed 0.5.
(5) The nominal pipe diameter shall not exceed 6 in. (150 mm) for feed mains and 4 in. (100 mm) for cross mains.
(6) Hangers shall not be omitted in accordance with 17.4.4.3, 17.4.4.4, or 17.4.4.5.

The type of main piping in 18.5.5.10.2(6) is important because it impacts the lateral loads expected for that section of main. The larger diameter pipes will produce greater horizontal loads. The capacity of hangers in a horizontal direction cannot be relied upon to carry the heavier loads produced by larger diameter pipes and will require lateral sway braces.

18.5.5.10.3 Branch lines permitted to omit lateral sway bracing by 18.5.5.10 shall not be omitted from load calculations for the mains serving them in 18.5.9.6.

18.5.5.11 The lateral sway bracing required by 18.5.5 shall be permitted to be omitted when 18.5.5.11.1 for branch lines or 18.5.5.11.2 for mains is met.

Special attention should be given to the requirement in 18.5.5.11.1 that legs be bent at a minimum of 30 degrees from vertical. This is usually a special order item, not the standard U-hook made by most hanger manufacturers.

EDUFIRE.IR

18.5.5.11.1 Branch lines shall comply with the following:

(1) The branch lines shall be individually supported by wraparound u-hooks or u-hooks arranged to keep pipe tight to the structural element provided the legs are bent out at least 30 degrees from the vertical and the maximum length of each leg and the rod size satisfies the conditions of Table 18.5.11.8(a) through Table 18.5.11.8(f) or the length of the rod shall be calculated.
(2) At least 75 percent of all the hangers on the branch line shall meet the requirements of 18.5.5.11.2(1).
(3) Consecutive hangers on the branch line shall not be permitted to exceed the limitation in 18.5.5.11.2(1).

N **18.5.5.11.2** Mains shall comply with all the following:

(1) The main piping shall be individually supported by wraparound u-hooks or u-hooks arranged to keep pipe tight to the structural element provided the legs are bent out at least 30 degrees from the vertical and the maximum length of each leg and rod size satisfies the conditions of Table 18.5.11.8(a) through Table 18.5.11.8(f).
(2) At least 75 percent of all the hangers on the main shall meet the requirements of 18.5.5.11.2(1).
(3) Consecutive hangers on the main shall not be permitted to exceed the limitation in 18.5.5.11.2(1).
(4) The seismic coefficient (C_p) shall not exceed 0.5.
(5) The nominal pipe diameter shall not exceed 6 in. (150 mm) for feed mains and 4 in. (100 mm) for cross mains.
(6) Hangers shall not be omitted in accordance with 17.4.4.3, 17.4.4.4, or 17.4.4.5.

18.5.6 Longitudinal Sway Bracing.

18.5.6.1 Longitudinal sway bracing spaced at a maximum of 80 ft (24 m) on center shall be provided for feed and cross mains.

The maximum distance of 80 ft (24 m) is to be measured between the sway brace connection to the pipe along the main being braced. It is possible for the sway braces to go in opposite directions when attaching to the structure, and the distance between the upper fastener connections can exceed 80 ft (24 m).

18.5.6.2 Longitudinal braces shall be allowed to act as lateral braces if they are within 24 in. (600 mm) of the centerline of the piping braced laterally.

Where a longitudinal brace also acts as a lateral brace, care must be given to address the combined total seismic load from both longitudinal and lateral pipe being braced. As in 18.5.5.8, the longitudinal brace should be on a pipe of equal or greater size than the pipe being braced laterally. A longitudinal brace on a smaller diameter main should not be expected to serve as lateral brace for an adjacent main of larger diameter. Such an arrangement could create too much load on a smaller diameter pipe such that it could be subject to damage in a seismic event.

18.5.6.3 The distance between the last brace and the end of the pipe or a change in direction shall not exceed 40 ft (12 m).

18.5.7 Pipe with Change(s) in Direction.

18.5.7.1 Each run of pipe between changes in direction shall be provided with both lateral and longitudinal bracing, unless the requirements of 18.5.7.2 are met.

18.5.7.2* Pipe runs less than 12 ft (3.7 m) in length shall be permitted to be supported by the braces on adjacent runs of pipe.

EDUFIRE.IR

A 90-degree turn in the piping might still need to be protected, but it does not act the same as the end of the line, which would be cantilevered. Where the change in direction is only for a span less than 12 ft (3.7 m), the lengths between braces are cumulative. Where the pipe that has changed direction is more than 12 ft (3.7 m), the run will need its own lateral and longitudinal bracing. There is no specific requirement to have sway braces located at or within a minimum distance from the change in direction.

A.18.5.7.2 See Figure A.18.5.7.2.

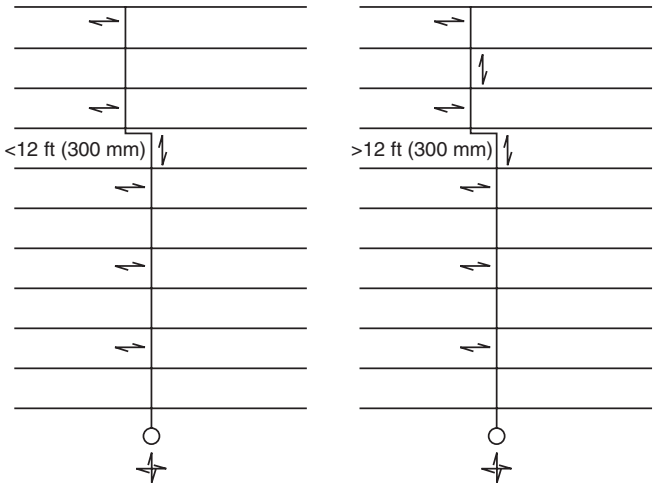

FIGURE A.18.5.7.2 *Examples of Brace Locations for Change in Direction of Pipe.*

18.5.8 Sway Bracing of Risers.

18.5.8.1* Tops of risers exceeding 3 ft (900 mm) in length shall be provided with a four-way brace.

A.18.5.8.1 The four-way brace provided at the riser can also provide longitudinal and lateral bracing for adjacent mains. This section is not intended to require four-way bracing on a sprig or on a drop to a single sprinkler.

N **18.5.8.1.1*** The four-way brace shall not be required for risers up to 7 ft (2.1 m) in length that terminate above the roof assembly or top landing.

A.18.5.8.1.1 See Figure A.18.2.3.1(2)(a).

18.5.8.2 Riser nipples shall be permitted to omit the four-way brace required by 18.5.8.1.

Riser nipples are defined in 3.3.180 as the vertical pieces of pipe connecting mains to branch lines at different, usually higher, elevations. Paragraph 18.5.8.2 clarifies that four-way bracing is not required at the tops of riser nipples, even if they cross the length thresholds listed in 18.5.9.6.1. However, a load calculation will be necessary if the riser nipple exceeds the length thresholds of 18.5.9.6.1. If large loads are present, longitudinal braces might be required along the branch line (see 18.5.9.6.1) to provide necessary support.

18.5.8.3 When a four-way brace at the top of a riser is attached on the horizontal piping, it shall be within 24 in. (600 mm) of the centerline of the riser and the loads for that brace shall include both the vertical and horizontal pipe.

Changes made to 18.5.8.3 for the 2010 edition clarified where the bracing needed to be located and also clarified that the brace loading must include the vertical piping of the riser within the zone of influence. This vertical load must be included in both the longitudinal and the lateral brace calculations.

EDUFIRE.IR

18.5.8.4 Distance between four-way braces for risers shall not exceed 25 ft (7.6 m).

Long risers need to have periodic support to ensure that they move with the building structure during a seismic event.

18.5.8.5 Four-way bracing shall not be required where risers penetrate intermediate floors in multistory buildings where the clearance does not exceed the limits of Section 18.4.

Limited clearance around a riser extending through a substantial floor or roof restricts movement and provides support similar to that provided by bracing, so the pipe stays in its intended location (see 18.5.8.3).

18.5.9* Horizontal Seismic Loads.

Annex material A.18.5.9 details an example of applying the horizontal seismic load. Fire sprinkler systems are installed in areas with both high and low expected seismic forces. Therefore, applying the information correctly for the site in which the system will be installed is important. The reference in A.18.5.9(4)(d) to the use of only the lateral load is strictly with regard to maximum spacing of lateral braces in accordance with Table 18.5.5.2(a) through Table 18.5.5.2(i), which are related to beam strength and flexibility of the piping. The full combined lateral and longitudinal load still must be taken into account when considering maximum loads on such braces using Table 18.5.11.8(a) through Table 18.5.11.8(f), listed loads for brace fittings, and maximum fastener loads according to Figure 18.5.12.1 and Table 18.5.12.2(a) through Table 18.5.12.2(j).

A.18.5.9 *Location of Sway Bracing.* Two-way braces are either longitudinal or lateral, depending on their orientation with the axis of the piping. *[See Figure A.18.5.9(a), Figure A.18.5.9(b), Figure A.18.5.9(c), and Figure A.18.5.9(d).]* The simplest form of two-way brace is a piece of steel pipe or angle. Because the brace must act in both compression and tension, it is necessary to size the brace to prevent buckling.

An important aspect of sway bracing is its location. In Building 1 of Figure A.18.5.9(a), the relatively heavy main will pull on the branch lines when shaking occurs. If the branch lines are held rigidly to the roof or floor above, the fittings can fracture due to the induced stresses. In selecting brace locations, one must consider both the design load on the brace, as well as the ability of the pipe to span between brace locations.

Bracing should be on the main as indicated at Location B of Figure A.18.5.9(a). With shaking in the direction of the arrows, the light branch lines will be held at the fittings. Where necessary, a lateral brace or other restraint should be installed to prevent a branch line from striking against building components or equipment.

A four-way brace is indicated at Location A of Figure A.18.5.9(a). This keeps the riser and main lined up and also prevents the main from shifting.

In Building 1 of Figure A.18.5.9(a), the branch lines are flexible in a direction parallel to the main, regardless of building movement. The heavy main cannot shift under the roof or floor, and it also steadies the branch lines. While the main is braced, the flexible couplings on the riser allow the sprinkler system to move with the floor or roof above, relative to the floor below.

Figure A.18.5.9(b), Figure A.18.5.9(c), and Figure A.18.5.9(d) show typical locations of sway bracing.

For all threaded connections, sight holes or other means should be provided to permit indication that sufficient thread is engaged.

To properly size and space braces, it is necessary to employ the following steps:

(1) Determine the seismic coefficient, C_p, using the procedures in 18.5.9.3 or 18.5.9.4. This is needed by the designer to verify that the piping can span between brace points. For the purposes of this example, assume that $C_p = 0.5$.
(2) Based on the distance of system piping from the structural members that will support the braces, choose brace shapes and sizes from Table 18.5.11.8(a) through Table 18.5.11.8(f) such that the maximum slenderness ratios, l/r, do not exceed 300. The angle of the braces from the vertical should be at least 30 degrees and preferably 45 degrees or more.

EDUFIRE.IR

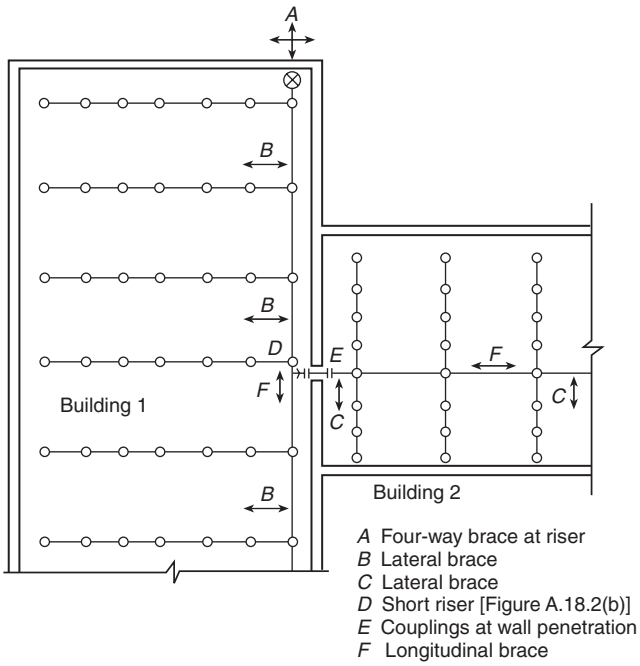

FIGURE A.18.5.9(a) *Typical Earthquake Protection for Sprinkler Main Piping.*

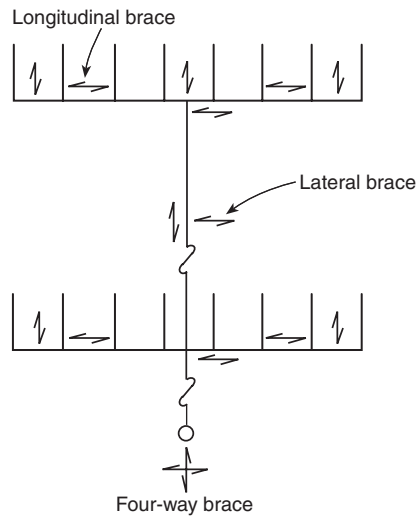

FIGURE A.18.5.9(b) *Typical Location of Bracing on Mains on Tree System.*

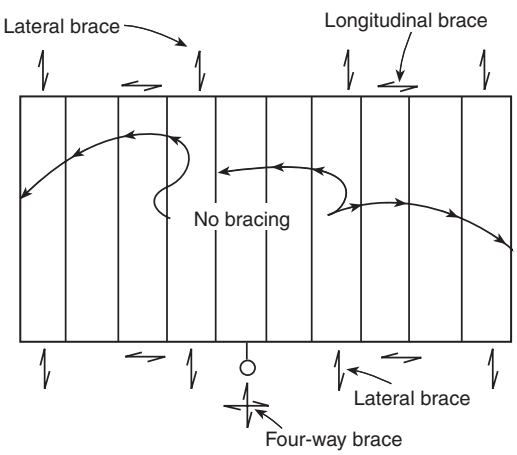

FIGURE A.18.5.9(c) *Typical Location of Bracing on Mains on Gridded System.*

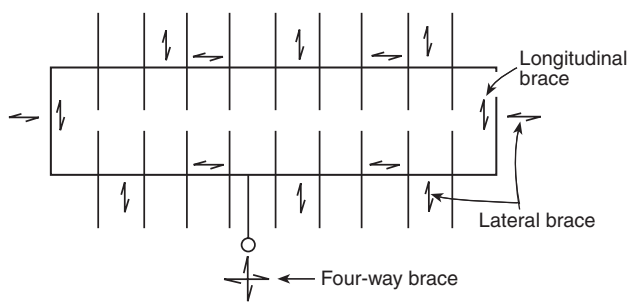

FIGURE A.18.5.9(d) *Typical Location of Bracing on Mains on Looped System.*

(3) Tentatively space lateral braces at 40 ft (12 m) maximum distances along system piping, and tentatively space longitudinal braces at 80 ft (24 m) maximum distances along system piping. Lateral braces should meet the piping at right angles, and longitudinal braces should be aligned with the piping.

(4) Determine the total load tentatively applied to each brace in accordance with the examples shown in Figure A.18.5.9(e) and the following:

EDUFIRE.IR

(a) For the loads on lateral braces on cross mains, add C_p times the weight of the branch line to C_p times the weight of the portion of the cross main within the zone of influence of the brace. *[See examples 1, 3, 6, and 7 in Figure A.18.5.9(e).]*

(b) For the loads on longitudinal braces on cross mains, consider only C_p times the weight of the cross mains and feed mains within the zone of influence. Branch lines need not be included. *[See examples 2, 4, 5, 7, and 8 in Figure A.18.5.9(e).]*

(c) For the four-way brace at the riser, add the longitudinal and lateral loads within the zone of influence of the brace *[see examples 2, 3, and 5 in Figure A.18.5.9(e)]*. For the four-way bracing at the top of the riser, C_p times the weight of the riser should be assigned to both the lateral and longitudinal loads as they are separately considered.

(d) When a single brace has a combined load from both lateral and longitudinal forces (such as a lateral brace at the end of a main that turns 90 degrees), only the lateral should be considered for comparison with the load tables in 18.5.5.2.

(5) If the total expected loads are less than the maximums permitted in Table 18.5.11.8(a) through Table 18.5.11.8(f) for the particular brace and orientation, and the maximum loads in the zone of influence of each lateral sway brace are less than the maximum values in Table 18.5.5.2(a) or Table 18.5.5.2(c), go on to A.18.5.9(6). If not, add additional braces to reduce the zones of influence of overloaded braces.

(6) Check that fasteners connecting the braces to structural supporting members are adequate to support the expected loads on the braces in accordance with Figure 18.5.12.1. If not, again add additional braces or additional means of support. Plates using multiple fasteners in seismic assemblies should follow the plate manufacturer guidelines regarding the applied loads.

Use the information on weights of water-filled piping contained within Table A.18.5.9. The factor of 1.15 is intended to approximate the additional weight of all the valves, fittings, and other devices attached to the system.

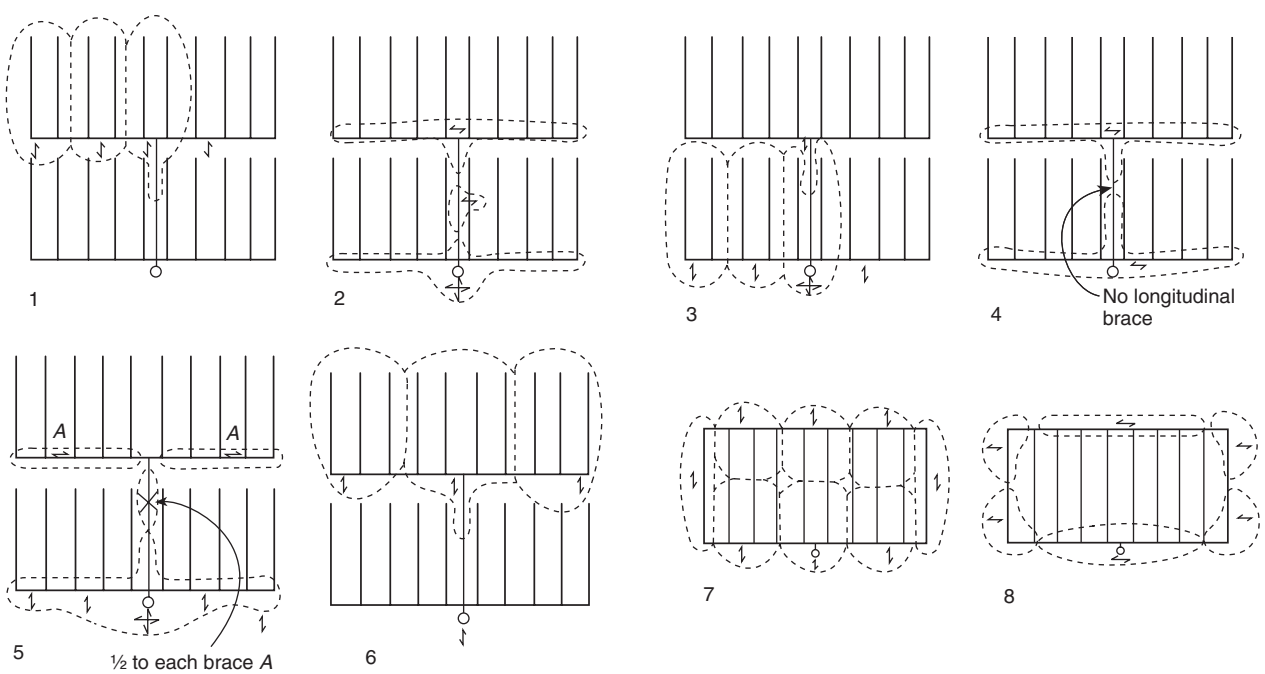

FIGURE A.18.5.9(e) *Examples of Load Distribution to Bracing.*

EDUFIRE.IR

TABLE A.18.5.9 *Piping Weights for Determining Horizontal Load*

Nominal Dimensions		*Weight of Water-Filled Pipe*	
in.	*mm*	*lb/ft*	*kg/m*
Schedule 40 Pipe			
1	25	2.05	3.05
1¼	32	2.93	4.36
1½	40	3.61	5.37
2	50	5.13	7.63
2½	65	7.89	11.74
3	80	10.82	16.10
3½	90	13.48	20.06
4	100	16.40	24.40
5	125	23.47	34.92
6	150	31.69	47.15
8*	200	47.70	70.98
Schedule 10 Pipe			
1	25	1.81	2.69
1¼	32	2.52	3.75
1½	40	3.04	4.52
2	50	4.22	6.28
2½	65	5.89	8.76
3	80	7.94	11.81
3½	90	9.78	14.55
4	100	11.78	17.53
5	125	17.30	25.74
6	150	23.03	34.27
8	200	40.08	59.64

*Schedule 30.

With the zone of influence method, both branch lines and mains are considered to contribute to the loads on lateral braces, but only mains are considered to contribute to the loads in longitudinal braces. The longitudinal braces are not expected to be affected by branch line loads because those forces are not uniformly transferred during earthquake motion. For each brace, the combined weights of the contributory water-filled piping are multiplied by the appropriate percentage of gravity used as the horizontal force factor to determine the total load. For a brace that serves as a lateral brace for one main and as a longitudinal brace for a perpendicular main, the loads must be added, since those forces would be applied simultaneously to the brace.

Figure A.18.5.9(a) through Figure A.18.5.9(e) show typical locations of sway bracing on various configurations of systems. Figure A.18.5.9(c) has no lateral bracing on the outside lines, because the outside lines are typical branch lines of the grid — that is, not oversized — and, therefore, are not considered mains.

18.5.9.1* The horizontal seismic load for the braces shall be as determined in 18.5.9.6 or 18.5.9.7, or as required by the authority having jurisdiction.

The edition of the applicable building code will affect the exact values since changes were made circa 2000 to the factors used in calculating the loads. The 2010 edition of SEI/ASCE 7 is the standard referenced by the 2012 edition through the 2018 edition of the *International Building Code®* and *NFPA 5000®*; the 2016 edition of SEI/ASCE 7 will be the reference in subsequent editions. Compliance with the 2006 edition or later of these codes produces a ratio of 2.5/4.5 = 0.55, resulting in significantly higher forces, based on the use of the equation, than earlier editions. To some extent, this increase has been offset by the clarification,

EDUFIRE.IR

CLOSER LOOK [18.5.9]

Understanding How to Determine Seismic Forces

The simplified approach to determining seismic forces, which was developed for the 2007 edition, involves the use of Table 18.5.9.3, which assigns the seismic coefficient or acceleration factor, C_p, based on the value of S_s (see 18.5.9.3). S_s is the short-period (0.2 second, or 5 cycles per second) seismic acceleration representing a 2 percent probability of being exceeded in 50 years. The 0.2-second period is considered reasonably representative of the shortest effective period of buildings and structures, and the 2 percent probability of being exceeded in 50 years relates to the 2500-year earthquake. Values of S_s are available on maps developed by the U.S. Geological Survey (USGS) and can be accessed at the USGS website. Multiplying the acceleration factor, C_p, by the adjusted system weight, W_p, gives the lateral force of the piping under earthquake motion. A number of conservative assumptions were used in the development of this simplified approach, which was developed based on the seismic design force formula contained in SEI/ASCE 7 for use with nonstructural components. The seismic design force formula is as follows:

$$F_p = 0.4 a_p S_{DS} W_p \left[\frac{1 + 2\left(\frac{z}{h}\right)}{\frac{R_p}{I_p}} \right]$$

where:

F_p = seismic design force

a_p = component amplification factor affected by the type of seismic attachment

S_{DS} = design spectral acceleration, short period, 5 percent damped, found as $S_{DS} = \frac{2}{3} S_{MS}$, where S_{MS} is the MCE acceleration, 5 percent damped, and is, in turn, found as $S_{MS} = F_a S_s$, where F_a is an acceleration-based site coefficient

W_p = component weight, which, in this case, is the sprinkler piping contributing to the load on a brace

z = height in the structure of the point of attachment of the component

h = average roof height of the structure

R_p = component response modification factor

I_p = component importance factor

In this equation, certain values are assigned for fire sprinkler systems in SEI/ASCE 7. As stated in A.18.5.9.1, the importance factor I_p is 1.5. The component response modification factor, R_p, for a steel piping system is 4.5, and the component amplification factor, a_p, is 2.5. It is worth noting that those values have been changed from the historic ones but are applicable based on recent editions of SEI/ASCE 7. For example, tentative interim amendment (TIA) 02-1 issued on the 2002 edition of NFPA 13 with an effective date of August 6, 2003, suggested the value $R_p = 3.5$, correlating with the 2002 edition of SEI/ASCE 7, which also specified a value of 1.0 for a_p. Current values were established in 2005 and have remained constant since then.

beginning in the 2007 edition of the standard, that NFPA 13 uses an allowable stress design approach (see A.18.5.1.3). Since the loads determined within SEI/ASCE 7 and the model codes are based on strength design, this allows a reduction by a multiplication factor of 0.7, which is incorporated in Table 18.5.9.3.

The "1 + 2(z/h)" factor in the force equation in 18.5.9 leads to force levels that are three times as high at the top of the building than at the base, regardless of building height. Because sprinkler systems are presumed to be installed throughout the building, the simplifying assumption used in the creation of Table 18.5.9.3 is that 1 + 2(z/h) = 3, with forces determined on the basis of the worst case, that is, the highest level.

In the determination of $S_{DS} = \frac{2}{3} S_{MS} = \frac{2}{3} F_a S_s$, F_a is a site-specific soil amplification factor, which can range from 0.8 for hard rock up to 2.5 in areas with softer soil and low seismic accelerations. As another simplifying conservative assumption, Table 18.5.9.3 is based on the maximum value of F_a for a given range of S_s. For S_s less than or equal to 0.33, Table 18.5.9.3 provides a minimum lateral design acceleration of $C_p = 0.35$, which is less than the traditional default value of 0.5 but higher than would be obtained through the use of the SEI/ASCE 7 equation in many low-risk seismic areas.

Table 18.5.9.3 is not intended to indicate where earthquake protection is required, since virtually all areas can be assigned some value of S_s. SEI/ASCE 7 and the model codes that adopt it exempt sprinkler systems from requirements for seismic protection based on the value of S_{DS} in combination with the occupancy category. In general, the codes require protection for buildings with S_{DS} exceeding 0.33, although protection is required for buildings and structures designed as essential facilities with S_{DS} exceeding 0.167.

A.18.5.9.1 The factors used in the computation of the horizontal seismic load should be available from several sources, including the project architect or structural engineer or the authority having jurisdiction. In addition, the ground motion parameter S_s, is available using maps

EDUFIRE.IR

or software developed by the U.S. Geological Survey. The approach presented in NFPA 13 is compatible with the requirements of ASCE/SEI 7, *Minimum Design Loads for Buildings and Other Structures*, which provides the seismic requirements for model building codes. Sprinkler systems are emergency systems and as such should be designed for an importance factor (I_p) of 1.5. Seismic load equations allow the reduction of the seismic force by a component response modification factor (R_p) that reflects the ductility of the system; systems where braced piping is primarily joined by threaded fittings should be considered less ductile than systems where braced piping is joined by welded or mechanical-type fittings. In addition, a factor, a_p, is used to account for dynamic amplification of nonstructural systems supported by structures. Currently, steel piping systems typically used for fire sprinklers are assigned an R_p factor of 4.5 and an a_p factor of 2.5.

18.5.9.2 The weight of the system being braced (W_p) shall be taken as 1.15 times the weight of the water-filled piping. *(See A.18.5.9.1.)*

Beginning with the 2002 edition, the value of W_p was specified to be 1.15 times the weight of the water-filled piping to account for the additional weight that might be imposed by fittings or sectional valves.

18.5.9.3 The horizontal force, F_{pw}, acting on the brace shall be taken as $F_{pw} = C_p W_p$, where C_p is the seismic coefficient selected in Table 18.5.9.3 utilizing the short period response parameter, S_s.

TABLE 18.5.9.3 *Seismic Coefficient Table*

S_S	C_p	S_S	C_p
0.33 or less	0.35	2.2	1.03
0.4	0.38	2.3	1.07
0.5	0.4	2.4	1.12
0.6	0.42	2.5	1.17
0.7	0.42	2.6	1.21
0.8	0.44	2.7	1.26
0.9	0.48	2.8	1.31
1	0.51	2.9	1.35
1.1	0.54	3	1.4
1.2	0.57	3.1	1.45
1.3	0.61	3.2	1.49
1.4	0.65	3.3	1.54
1.5	0.7	3.4	1.59
1.6	0.75	3.5	1.63
1.7	0.79	3.6	1.68
1.8	0.84	3.7	1.73
1.9	0.89	3.8	1.77
2	0.93	3.9	1.82
2.1	0.98	4	1.87

18.5.9.3.1 The value of S_s used in Table 18.5.9.3 shall be obtained from the authority having jurisdiction or from seismic hazard maps.

18.5.9.3.2* Linear interpolation shall be permitted to be used for intermediate values of S_s.

A.18.5.9.3.2 As linear interpolation of Table 18.5.9.3 is permitted, the following equation can be used to achieve the interpolated values:

$$C_p = C_{p-low} + \frac{C_{p-high} - C_{p-low}}{S_{s-high} - S_{s-low}}(S_s - S_{s-low}) \qquad \textbf{[A.18.5.9.3.2]}$$

EDUFIRE.IR

where:

C_p = seismic coefficient value being sought
C_{p-low} = next lower seismic coefficient value from Table 18.5.9.3
C_{p-high} = next higher seismic coefficient value from Table 18.5.9.3
S_s = spectral response as defined in 3.3.207
S_{s-low} = next lower S_s value from Table 18.5.9.3
S_{s-high} = next higher S_s value from Table 18.5.9.3

18.5.9.4* The horizontal force, F_{pw}, acting on the brace shall be permitted to be determined in accordance with 13.3.1 of ASCE/SEI 7, *Minimum Design Loads for Buildings and Other Structures,* multiplied by 0.7 to convert to allowable stress design (ASD).

Users of NFPA 13 have the option to determine horizontal forces in accordance with the actual equation in SEI/ASCE 7. This option can be expected to result in lower seismic loads under favorable soil conditions, such as solid rock, where lower values of F_a could be used than those included in the assumptions for the simplified approach. It can also prove beneficial to the seismic protection plan for with high-rise structures because the forces will vary from lower to upper levels. Annex E contains a description of the assumptions used in the development of the simplified approach, including those relating to F_a.

A.18.5.9.4 NFPA 13 has traditionally used the allowable stress design (ASD) method for calculations. The building codes typically use an ultimate strength design. The 0.7 referred to in this section is a conversion value to accommodate the different calculation methods. *(See also Annex E.)*

18.5.9.5* Where data for determining C_p are not available, the horizontal seismic force acting on the braces shall be determined as specified in 18.5.9.3 with $C_p = 0.5$.

Horizontal force factors are addressed in 18.5.9.1. NFPA 13 earthquake protection criteria were traditionally based on an assumed horizontal acceleration of half of gravity, or 0.5 g. That acceleration resulted in a horizontal force factor of $F_{pw} = 0.5\ W_p$, or a horizontal force equivalent to half the weight of the water-filled piping. The acceleration was judged to be suitably conservative for even highly active earthquake areas, and it was not considered economically justified to fine-tune system bracing loads to accommodate lower expected earthquake forces in some localities. The 0.5 g value continues to serve as the default value for bracing criteria, but now only when additional information is not available. Since the 1994 edition, NFPA 13 has recommended the use of other force factors to accommodate code requirements that specify the use of higher or lower horizontal acceleration values. Use of horizontal accelerations other than 0.5 g has become the norm for the following two reasons:

1. The 1989 Loma Prieta and 1994 Northridge earthquakes in California demonstrated horizontal accelerations in excess of 0.5 g.
2. Earthquake protection of sprinkler systems is now mandated in many areas where expected accelerations can be less than 0.5 g.

Where earthquake protection of the system is required but other horizontal acceleration factors are not specified by the authority having jurisdiction, the $F_{pw} = 0.5\ W_p$ default value can continue to be used in accordance with 18.5.9.3.

A.18.5.9.5 S_s is a measure of earthquake shaking intensity. S_s shall be taken as the maximum considered earthquake ground motion for 0.2-second spectral response acceleration (5 percent of critical damping), Site Class B. The data are available from the authority having jurisdiction or, in the United States, from maps developed by the U.S. Geological Survey. All that is required to get S_s is the latitude and longitude of the project site.

The horizontal force factor was given as F_p in earlier editions of NFPA 13. It has been changed to F_{pw}, to clearly indicate that it is a working, not an ultimate, load. In model building codes, F_p is used to denote the strength design level load.

EDUFIRE.IR

It is not the intent of this section to default to the C_p value of 0.5 before attempts to determine the value of S_s and related coefficient value for C_p are made, such as on-line information provided by the U.S. Geological Survey website.

Because NFPA 13 is used outside the United States in areas where the USGS information does not apply, 18.5.9.5 and A.18.5.9.5 are provided to guide the user for situations in which the default value is permitted to be used. Within the United States, there is no reason why the correct S_s and C_p values should not be determined with the help of the information in Annex E. The default C_p of 0.5 should be used only when no other information is available.

18.5.9.6* The zone of influence for lateral braces shall include all branch lines, drops, sprigs, and mains tributary to the brace, except branch lines that are provided with longitudinal bracing or as prohibited by 18.5.9.6.1.

A.18.5.9.6 The zones of influence do not have to be symmetrically based on brace spacing. It is the intent of NFPA 13 that the chosen zone of influence be the worst-case load scenario.

18.5.9.6.1* When riser nipples are provided in systems requiring seismic protection, they shall satisfy the following equation, unless one of the following conditions is met:

(1) Where riser nipples are 4 ft (1.2 m) or less in length and C_p is 0.50 or less
(2) Where riser nipples are 3 ft (900 mm) or less in length and C_p is less than 0.67
(3) Where riser nipples are 2 ft (600 mm) in length or less and C_p is less than is 1.0

$$\frac{(H_r \cdot W_p \cdot C_p)}{S} \geq F_y \qquad \textbf{[18.5.9.6.1]}$$

where:

H_r = length of riser nipple piping (in inches)
W_p = tributary weight (in pounds) for the branch line or portion of branch line within the zone of influence including the riser nipple
C_p = seismic coefficient
S = sectional modulus of the riser nipple pipe
F_y = allowable yield strength of 30,000 psi (2070 bar) for steel, 30,000 psi for copper (soldered), 8000 psi (550 bar) for CPVC

Lateral braces on mains are expected to carry the load of branch lines attached to that specific section of main piping, unless longitudinal braces are provided on the branch lines themselves. In general, riser nipples that are short lengths can handle this load transfer effectively without causing harm to the riser nipple pipe or its connections. Where the riser nipple is long and the load from the branch line is significant, it could be possible to overstress the pipe and cause damage.

The formula in 18.5.9.6.1 can be used to determine if the allowable yield stress (F_y) is sufficient to carry the load from the branch line. This calculation needs to be performed only when the riser nipple length and seismic force factor C_p exceed the thresholds in 18.5.9.

A.18.5.9.6.1 Where the C_p is 1.0 or greater, the calculation should be done for any length riser nipple. The loads in this condition can rapidly exceed the yield strength. Where Schedule 10 and Schedule 40 steel pipe are used, the section modulus can be found in Table 17.3.1(b). Table A.18.5.9.6.1 illustrates the required yield strength calculation based on riser nipple length.

18.5.9.6.2 If the calculated value is equal to or greater than the yield strength of the riser nipple, the longitudinal seismic load of each line shall be evaluated individually, and branch lines shall be provided with longitudinal sway bracing per 18.5.6.

18.5.9.7 The zone of influence for longitudinal braces shall include all mains tributary to the brace.

EDUFIRE.IR

CLOSER LOOK [18.5.9.6]

Determining When Branch Lines Need Longitudinal Braces

A wet pipe sprinkler system is being installed using riser nipples that are 4½ ft (1.4 m) long. The riser nipple is made from a 2 in. (50 mm) Schedule 40 pipe. The connected branch line is 1½ in. (40 mm) Schedule 40 pipe and 100 ft (30 m) long. Assume that the seismic coefficient is 0.5. Are longitudinal sway braces needed along the branch line?

The tributary weight for the riser nipple is the 100 ft (30 m) length times 3.61 lb/ft (5.37 kg/m) from Table A.18.5.9 for 1½ in. (40 mm) Schedule 40 pipe plus the riser nipple of 4½ ft (1.4 m) times 5.13 lb/ft (7.63 kg/m) for 2 in. (50 mm) Schedule 40 pipe. This sum is then multiplied by 1.15 per 18.5.9.2, which is 441.7 lb (200.4 kg). Using the formula from 18.5.9.6.1, the calculated load is 21,296 psi (1468 bar):

$$\frac{H_r \cdot W_p \cdot C_p}{S} = \frac{54\,\text{in} \cdot 441.71b \cdot 0.5}{0.56\,\text{in}^3} = 21{,}296\,\text{psi}$$

The required section modulus, S, was taken from Table 17.3.1(b). The value is then compared with the given value for the pipe material. The yield strength, F_y, for steel is 30,000 psi (2068 bar). Since the calculated value does not exceed the allowable F_y, the riser nipple is acceptable, and additional longitudinal braces on the branch line are not required.

TABLE A.18.5.9.6.1 *Required Yield Strength Calculation Based on Riser Nipple Length on C_p*

Riser Nipple Length	Seismic Coefficient			
	$C_p \le 0.50$	$C_p \le 0.67$	$C_p < 1.0$	$C_p > 1.0$
>4 ft (1.2 m)	X	X	X	X
≤4 ft (1.2 m)		X	X	X
≤3 ft (915 mm)			X	X
≤2 ft (610 mm)				X

Note: Conditions marked X are required to satisfy the equation provided in 18.5.9.6.1.

18.5.10 Net Vertical Reaction Forces. Where the horizontal seismic loads used exceed 0.5 W_p and the brace angle is less than 45 degrees from vertical or where the horizontal seismic load exceeds 1.0 W_p and the brace angle is less than 60 degrees from vertical, the braces shall be arranged to resist the net vertical reaction produced by the horizontal load.

The requirement in 18.5.10 addresses the need to protect against upward vertical movement of the pipe as a result of a strong horizontal load in combination with a limited brace angle from vertical. Braces must be arranged to resist net vertical reaction forces.

Subsection 18.5.10 does not allow the use of components that are not braces. All braces are required to be a listed assembly per 18.5.2.1. An exception to this is addressed in 18.5.2.2, which allows some materials within a brace assembly to not be listed. However, 18.5.2.2.1 requires the connection to nonlisted materials to be listed sway brace fittings. Because 18.5.10 contains the word "brace," the only way to resist a vertical force under the specified conditions is with the listed sway brace assemblies.

18.5.11* Sway Brace Installation.

A.18.5.11 Sway brace members should be continuous. Where necessary, splices in sway bracing members should be designed and constructed to ensure that brace integrity is maintained.

18.5.11.1* Bracing shall be attached directly to the system pipe.

Bracing can be attached to feed mains, cross mains, branch lines, or other system piping that require seismic support. In earlier editions, this paragraph had required the braces to be attached to feed mains and

EDUFIRE.IR

cross mains only. That was necessary because bracing on the branch lines was not permitted to carry the seismic load of the mains, meaning the mains needed their own bracing. Yet there are circumstances where branch lines and other system piping need independent bracing assemblies.

A.18.5.11.1 Sway brace design and installation is critical to performance and requires attention to detail. Sway brace design parameters are dynamic and interdependent. Accordingly, seismic force is influenced by geography, brace location is impacted by system design, and brace geometry is relative to the building structure.

To enhance system durability and performance, sway brace installation should show evidence of good craftsmanship in conformance to approved drawings, correctly assembled and mounted at proper angles on a plane that corresponds to the parallel and perpendicular axis of the system pipe.

18.5.11.2 Sway bracing shall be tight.

FAQ [18.5.11.3]

How is the slenderness ratio determined?

The slenderness ratio of a brace (*l*/*r*) is determined by dividing the length of the brace (*l*) by its least radius of gyration (*r*).

18.5.11.3 For individual braces, the slenderness ratio *(l/r)* shall not exceed 300, where *l* is the length of the brace and *r* is the least radius of gyration.

The least radius of gyration is a mathematical abstraction related to the ability of a shape to resist buckling. To determine the least radius of gyration of a shape that is nonsymmetrical along its axis, the least stable axis must be considered, because that is where buckling is expected to occur.

The slenderness ratio is limited to a maximum of 300 because most braces are expected to act as long columns when they are resisting horizontal and vertical loads in compression. Long columns can help absorb some of the energy of an earthquake, but excessive length reduces the column's ability to resist buckling and invites fatigue failure over time.

Table 18.5.11.8(a) through Table 18.5.11.8(f) include the maximum lengths and maximum permissible seismic loads of various types of braces that qualify for slenderness ratios of 100, 200, and 300.

18.5.11.4 Where threaded pipe is used as part of a sway brace assembly, it shall not be less than Schedule 30.

18.5.11.5 All parts and fittings of a brace shall lie in a straight line to avoid eccentric loadings on fittings and fasteners.

18.5.11.6 For longitudinal braces only, the brace shall be permitted to be connected to a tab welded to the pipe in conformance to 7.5.2.

18.5.11.7 For tension-only braces, two tension-only brace components opposing each other must be installed at each lateral or longitudinal brace location.

Tension-only braces do not have any compression value; therefore, they need to be installed in opposing directions to handle the cyclic loads of an earthquake. Tension-only braces alone cannot resist any upward vertical forces. They must be configured in such a way that they are in compliance with 18.5.10, which addresses net upward vertical forces, where applicable.

18.5.11.8 The loads determined in 18.5.9 shall not exceed the lesser of the maximum allowable loads provided in Table 18.5.11.8(a)through Table 18.5.11.8(f), and the manufacturer's certified maximum allowable horizontal loads for brace angles of 30 to 44 degrees, 45 to 59 degrees, 60 to 89 degrees, or 90 degrees.

It should be recognized that the allowable loads for brace members might be much higher than the allowable loads for listed brace fittings and fasteners. The strength of the brace assembly is based on the weakest link of the brace, the sway brace (pipe attachment) fitting, the structure attachment fitting, and the fastener.

Exhibit 18.7 illustrates unacceptable and acceptable lateral brace connections. The arrangement in Exhibit 18.7 (left) is unacceptable, because the ring is not snug and the sway brace is not perpendicular to the pipe. The bracing is required to be tight. In addition, the bracing on all parts and fittings of the brace are to lie in a straight line to avoid an eccentric loading on fittings and fasteners. For longitudinal braces, the brace obviously will meet the pipe strap at an angle from vertical but should be aligned with the centerline of the pipe.

EDUFIRE.IR

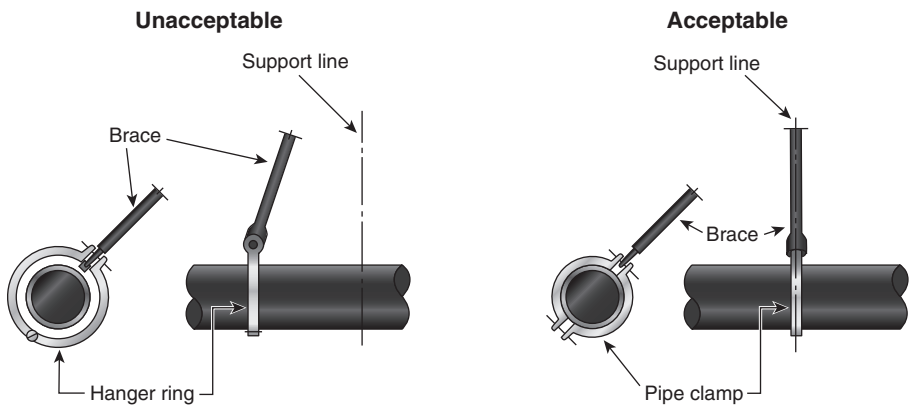

EXHIBIT 18.7 Examples of Lateral Brace Connections: (left) Unacceptable Lateral Brace Connection and (right) Acceptable Lateral Brace Connection.

TABLE 18.5.11.8(a) *Maximum Horizontal Loads for Sway Braces with l/r = 100 for Steel Braces with F_y = 36 ksi*

Brace Shape and Size (in.)		Area (in.^{2})	Least Radius of Gyration (r) (in.)	Maximum Length for l/r = 100		Maximum Horizontal Load (lb)		
						Brace Angle		
				ft	in.	30° to 44°Angle from Vertical	45° to 59°Angle from Vertical	60° to 90°Angle from Vertical
Pipe Schedule 40	1	0.494	0.421	3	6	3,150	4,455	5,456
	1¼	0.669	0.540	4	6	4,266	6,033	7,389
	1½	0.799	0.623	5	2	5,095	7,206	8,825
	2	1.07	0.787	6	6	6,823	9,650	11,818
Angles	1½ × 1½ × ¼	0.688	0.292	2	5	4,387	6,205	7,599
	2 × 2 × ¼	0.938	0.391	3	3	5,982	8,459	10,360
	2½ × 2 × ¼	1.06	0.424	3	6	6,760	9,560	11,708
	2½ × 2½ × ¼	1.19	0.491	4	1	7,589	10,732	13,144
	3 × 2½ × ¼	1.31	0.528	4	4	8,354	11,814	14,469
	3 × 3 × ¼	1.44	0.592	4	11	9,183	12,987	15,905
Rods (all thread)	⅜	0.07	0.075	0	7	446	631	773
	½	0.129	0.101	0	10	823	1,163	1,425
	⅝	0.207	0.128	1	0	1,320	1,867	2,286
	¾	0.309	0.157	1	3	1,970	2,787	3,413
	⅞	0.429	0.185	1	6	2,736	3,869	4,738
Rods (threaded at ends only)	⅜	0.11	0.094	0	9	701	992	1,215
	½	0.196	0.125	1	0	1,250	1,768	2,165
	⅝	0.307	0.156	1	3	1,958	2,769	3,391
	¾	0.442	0.188	1	6	2,819	3,986	4,882
	⅞	0.601	0.219	1	9	3,833	5,420	6,638
Flats	1½ × ¼	0.375	0.0722	0	7	2,391	3,382	4,142
	2 × ¼	0.5	0.0722	0	7	3,189	4,509	5,523
	2 × ⅜	0.75	0.1082	0	10	4,783	6,764	8,284

EDUFIRE.IR

TABLE 18.5.11.8(b) *Maximum Horizontal Loads for Sway Braces with l/r = 200 for Steel Braces with F_y = 36 ksi*

Brace Shape and Size (in.)		Area (in.²)	Least Radius of Gyration (r) (in.)	Maximum Length for l/r = 200		Maximum Horizontal Load (lb)		
						Brace Angle		
				ft	in.	30° to 44° Angle from Vertical	45° to 59° Angle from Vertical	60° to 90° Angle from Vertical
Pipe Schedule 40	1	0.494	0.421	7	0	926	1310	1604
	1¼	0.669	0.540	9	0	1254	1774	2173
	1½	0.799	0.623	10	4	1498	2119	2595
	2	1.07	0.787	13	1	2006	2837	3475
Angles	1½ × 1½ × ¼	0.688	0.292	4	10	1290	1824	2234
	2 × 2 × ¼	0.938	0.391	6	6	1759	2487	3046
	2½ × 2 × ¼	1.06	0.424	7	0	1988	2811	3442
	2½ × 2½ × ¼	1.19	0.491	8	2	2231	3155	3865
	3 × 2½ × ¼	1.31	0.528	8	9	2456	3474	4254
	3 × 3 × ¼	1.44	0.592	9	10	2700	3818	4677
Rods (all thread)	⅜	0.07	0.075	1	2	131	186	227
	½	0.129	0.101	1	8	242	342	419
	⅝	0.207	0.128	2	1	388	549	672
	¾	0.309	0.157	2	7	579	819	1004
	⅞	0.429	0.185	3	0	804	1138	1393
Rods (threaded at ends only)	⅜	0.11	0.094	1	6	206	292	357
	½	0.196	0.125	2	0	368	520	637
	⅝	0.307	0.156	2	7	576	814	997
	¾	0.442	0.188	3	1	829	1172	1435
	⅞	0.601	0.219	3	7	1127	1594	1952
Flats	1½ × ¼	0.375	0.0722	1	2	703	994	1218
	2 × ¼	0.5	0.0722	1	2	938	1326	1624
	2 × ⅜	0.75	0.1082	1	9	1406	1989	2436

TABLE 18.5.11.8(c) *Maximum Horizontal Loads for Sway Braces with l/r = 300 for Steel Braces with F_y = 36 ksi*

Brace Shape and Size (in.)		Area (in.²)	Least Radius of Gyration (r) (in.)	Maximum Length for l/r = 300		Maximum Horizontal Load (lb)		
						Brace Angle		
				ft	in.	30° to 44° Angle from Vertical	45° to 59° Angle from Vertical	60° to 90° Angle from Vertical
Pipe Schedule 40	1	0.494	0.421	10	6	412	582	713
	1¼	0.669	0.540	13	6	558	788	966
	1½	0.799	0.623	15	6	666	942	1153
	2	1.07	0.787	19	8	892	1261	1544
Angles	1½ × 1½ × ¼	0.688	0.292	7	3	573	811	993
	2 × 2 × ¼	0.938	0.391	9	9	782	1105	1354
	2½ × 2 × ¼	1.06	0.424	10	7	883	1249	1530
	2½ × 2½ × ¼	1.19	0.491	12	3	992	1402	1718
	3 × 2½ × ¼	1.31	0.528	13	2	1092	1544	1891
	3 × 3 × ¼	1.44	0.592	14	9	1200	1697	2078

EDUFIRE.IR

TABLE 18.5.11.8(c) Continued

Brace Shape and Size (in.)		Area (in.²)	Least Radius of Gyration (r) (in.)	Maximum Length for l/r = 300		Maximum Horizontal Load (lb)		
						Brace Angle		
				ft	in.	30° to 44°Angle from Vertical	45° to 59°Angle from Vertical	60° to 90°Angle from Vertical
Rods (all thread)	⅜	0.07	0.075	1	10	58	82	101
	½	0.129	0.101	2	6	108	152	186
	⅝	0.207	0.128	3	2	173	244	299
	¾	0.309	0.157	3	11	258	364	446
	⅞	0.429	0.185	4	7	358	506	619
Rods (threaded at ends only)	⅜	0.11	0.094	2	4	92	130	159
	½	0.196	0.125	3	1	163	231	283
	⅝	0.307	0.156	3	10	256	362	443
	¾	0.442	0.188	4	8	368	521	638
	⅞	0.601	0.219	5	5	501	708	867
Flats	1½ × ¼	0.375	0.0722	1	9	313	442	541
	2 × ¼	0.5	0.0722	1	9	417	589	722
	2 × ⅜	0.75	0.1082	2	8	625	884	1083

TABLE 18.5.11.8(d) Maximum Horizontal Loads for Sway Braces with l/r = 100 for Steel Braces with F_y = 248 N/mm²

Brace Shape and Size (mm)		Area (mm²)	Least Radius of Gyration (r) (mm)	Maximum Length for l/r = 100		Maximum Horizontal Load (kg)		
						Brace Angle		
				m	mm	30° to 44°Angle from Vertical	45° to 59°Angle from Vertical	60° to 90°Angle from Vertical
Pipe Schedule 40	25	318.7	11	1.0	150	1,429	2,021	2,475
	32	431.6	14	1.2	150	1,935	2,737	3,352
	40	515.5	16	1.5	50	2,311	3,269	4,003
	50	690.3	20	1.8	150	3,095	4,377	5,361
Angles	40 × 40 × 6	443.9	7	0.6	125	1,990	2,815	3,447
	50 × 50 × 6	605.2	10	1.0	75	2,713	3,837	4,699
	65 × 50 × 6	683.9	11	1.0	150	3,066	4,336	5,311
	65 × 65 × 6	767.7	12	1.2	25	3,442	4,868	5,962
	80 × 65 × 6	845.2	13	1.2	100	3,789	5,359	6,563
	80 × 80 × 6	929.0	15	1.2	275	4,165	5,891	7,214
Rods (all thread)	10	45.2	2	0.0	175	202	286	351
	15	83.2	3	0.0	250	373	528	646
	16	133.5	3	0.3	0	599	847	1,037
	20	199.4	4	0.3	75	894	1,264	1,548
	22	276.8	5	0.3	150	1,241	1,755	2,149

(Continues)

EDUFIRE.IR

TABLE 18.5.11.8(d) *Continued*

Brace Shape and Size (mm)		Area (mm^2)	Least Radius of Gyration (r) (mm)	Maximum Length for l/r = 100		Maximum Horizontal Load (kg)		
						Brace Angle		
				m	mm	30° to 44°Angle from Vertical	45° to 59°Angle from Vertical	60° to 90°Angle from Vertical
Rods (threaded at ends only)	10	71.0	2	0.0	225	318	450	551
	15	126.5	3	0.3	0	567	802	982
	16	198.1	4	0.3	75	888	1,256	1,538
	20	285.2	5	0.3	150	1,279	1,808	2,214
	22	387.7	5	0.3	225	1,739	2,458	3,011
Flats	40 × 6	241.9	2	0.0	175	1,085	1,534	1,879
	50 × 6	322.6	2	0.0	175	1,447	2,045	2,505
	50 × 10	483.9	3	0.0	250	2,170	3,068	3,758

TABLE 18.5.11.8(e) *Maximum Horizontal Loads for Sway Braces with l/r = 200 for Steel Braces with F_y = 248 N/mm²*

Brace Shape and Size (mm)		Area (mm^2)	Least Radius of Gyration (r) (mm)	Maximum Length for l/r = 200		Maximum Horizontal Load (kg)		
						Brace Angle		
				m	mm	30° to 44°Angle from Vertical	45° to 59°Angle from Vertical	60° to 90°Angle from Vertical
Pipe Schedule 40	25	318.7	11	2.1	0	420	594	728
	32	431.6	14	2.7	0	569	805	986
	40	515.5	16	3	100	679	961	1177
	50	690.3	20	4.0	25	910	1287	1576
Angles	40 × 40 × 6	443.9	7	1.2	250	585	827	1013
	50 × 50 × 6	605.2	10	1.8	150	798	1128	1382
	65 × 50 × 6	683.9	11	2.1	0	902	1275	1561
	65 × 65 × 6	767.7	12	2.4	50	1012	1431	1753
	80 × 65 × 6	845.2	13	2.4	225	1114	1576	1930
	80 × 80 × 6	929.0	15	2.7	250	1225	1732	2121
Rods (all thread)	10	45.2	2	0.3	50	59	84	103
	15	83.2	3	0.3	200	110	155	190
	16	133.5	3	0.6	25	176	249	305
	20	199.4	4	0.6	175	263	371	455
	22	276.8	5	0.9	0	365	516	632
Rods (threaded at ends only)	10	71.0	2	0.3	150	93	132	162
	15	126.5	3	0.6	0	167	236	289
	16	198.1	4	0.6	175	261	369	452
	20	285.2	5	0.9	25	376	532	651
	22	387.7	5	0.9	175	511	723	885
Flats	40 × 6	241.9	2	0.3	50	319	451	552
	50 × 6	322.6	2	0.3	50	425	601	737
	50 × 10	483.9	3	0.3	225	638	902	1105

EDUFIRE.IR

TABLE 18.5.11.8(f) *Maximum Horizontal Loads for Sway Braces with l/r = 300 for Steel Braces with F_y = 248 N/mm²*

Brace Shape and Size (mm)		Area (mm²)	Least Radius of Gyration (r) (mm)	Maximum Length for l/r = 300		Maximum Horizontal Load (kg)		
						Brace Angle		
				m	mm	30° to 44°Angle from Vertical	45° to 59°Angle from Vertical	60° to 90°Angle from Vertical
Pipe Schedule 40	25	318.7	10.5	3	150	187	264	323
	32	431.6	13.5	4	150	253	357	438
	40	515.5	15.6	4.6	150	302	427	523
	50	690.3	19.7	5.8	200	405	572	700
Angles	40 × 40 × 6	443.9	7.3	2.1	75	260	368	450
	50 × 50 × 6	605.2	9.8	2.7	225	355	501	614
	65 × 50 × 6	683.9	10.6	3	175	401	567	694
	65 × 65 × 6	767.7	12.3	3.7	75	450	636	779
	80 × 65 × 6	845.2	13.2	4	50	495	700	858
	80 × 80 × 6	929.0	14.8	4.3	225	544	770	943
Rods (all thread)	10	45.2	1.9	0.3	250	26	37	46
	15	83.2	2.5	0.6	150	49	69	84
	16	133.5	3.2	0.9	50	79	111	136
	20	199.4	3.9	0.9	275	117	165	202
	22	276.8	4.6	1.2	175	162	230	281
Rods (threaded at ends only)	10	71.0	2.4	0.6	100	42	59	72
	15	126.5	3.1	0.9	25	74	105	128
	16	198.1	3.9	0.9	250	116	164	201
	20	285.2	4.7	1.2	200	167	236	289
	22	387.7	5.5	1.5	125	227	321	393
Flats	40 × 6	241.9	1.8	0.3	225	142	200	245
	50 × 6	322.6	1.8	0.3	225	189	267	327
	50 × 10	483.9	2.7	0.6	200	283	401	491

18.5.11.9* Other pipe schedules and materials not specifically included in Table 18.5.11.8(a) through Table 18.5.11.8(f) shall be permitted to be used if certified by a registered professional engineer to support the loads determined in accordance with the criteria in the tables.

A.18.5.11.9 Maximum allowable horizontal loads for steel sway braces shown in Table 18.5.11.8(a) through Table 18.5.11.8(f) are applicable when the system is designed using allowable stress design methods. The maximum allowable loads have been derived for the controlling condition (braces in compression) using allowable stress design provisions of American Institute of Steel Construction (AISC) 360, *Specification for Structural Steel Buildings*.

In determining allowable horizontal loads in the tables, a modulus of elasticity (E) of 29,000 ksi, a yield stress (F_y) of 36 ksi, and an effective length factor (K) of 1.0 were assumed, since these are common. If these values are different in a specific situation, table values might need to be adjusted. Gross section properties are used for all shapes except for all-thread rods. For all-thread rods, area and radius of gyration are based on the minimum area of the threaded rod based on the radius at the root of the threads.

18.5.11.9.1 Calculations shall be submitted where required by the authority having jurisdiction.

18.5.11.10 C-type clamps including beam and large flange clamps, with or without restraining straps, shall not be used to attach braces to the building structure.

EDUFIRE.IR

Clamping-type listed sway brace fittings are available that are acceptable to use on steel beams without retaining straps. However, such fittings must be specified in the listing and the manufacturer's installation instructions.

18.5.11.11 Powder-driven fasteners shall not be used to attach braces to the building structure, unless they are specifically listed for service in resisting lateral loads in areas subject to earthquakes.

Reports of powder-driven fasteners pulling out during earthquakes have led to the prohibition of their use in attaching braces, unless the fasteners are specifically listed for such use, as stated in 18.5.11.11. At the time of publication of the 2019 edition of NFPA 13, no such listings were known to be available.

Additional modifications have been made in the 2019 edition to best align with the model standards. Prying factors are needed from the manufacturers of the structural attachment in order to determine the load capacity of the fastener.

18.5.12* Fasteners.

A.18.5.12 Concrete anchors can be cast-in-place [installed before the concrete is placed — see Figure A.18.5.12(a) and Figure A.18.5.12(b)] or post-installed [installed in hardened concrete — see Figure A.18.5.12(c)]. Examples of cast-in-place concrete anchors are embedded steel bolts or concrete inserts. There are several types of post-installed anchors, including expansion anchors, chemical or adhesive anchors, and undercut anchors. The criteria in Table 18.5.12.2(a) through Table 18.5.12.2(j) are based on the use of listed cast-in-place concrete inserts and listed post-installed wedge expansion anchors. The values for "effective embedment" for cast-in-place anchors and "nominal embedment" for post-installed anchors as shown in the tables represent the majority of commonly available anchors on the market at the time of publishing. Use of other anchors in concrete should be in accordance with the listing provisions of the anchor. Anchorage designs are usable under allowable stress design (ASD) methods.

Values in Table 18.5.12.2(a) through Table 18.5.12.2(j) are based on ultimate strength design values obtained using the procedures in ACI 318, *Building Code Requirements for Structural Concrete and Commentary*, Chapter 17, which are then adjusted for ASD. Concrete inserts are installed into wood forms for concrete members using fasteners prior to the casting

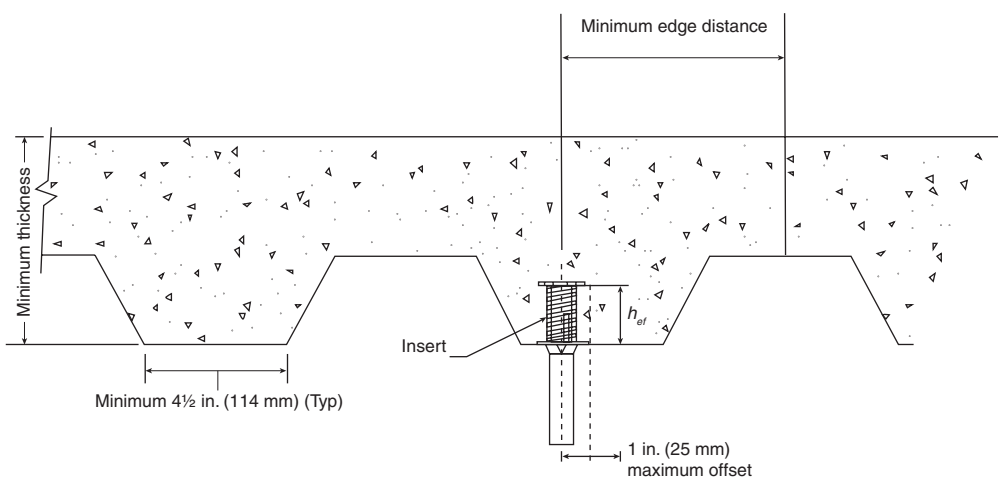

Note: h_{ef} is the effective embedment depth per Table 18.5.12.2(f).

FIGURE A.18.5.12(a) *Metal Deck Insert.*

EDUFIRE.IR

of concrete or inserted into wood forms for concrete members using fasteners prior to the casting of concrete or inserted into a hole cut in steel deck that will be filled with concrete topping slab. A bolt or rod can be installed into the internally threaded concrete insert after the wood form is removed from the concrete or from the underside of the steel deck after it is filled with concrete topping slab. Wedge anchors are torque-controlled expansion anchors that are set by applying a torque to the anchor's nut, which causes the anchor to rise while the wedge stays in place. This causes the wedge to be pulled onto a coned section of the anchor and presses the

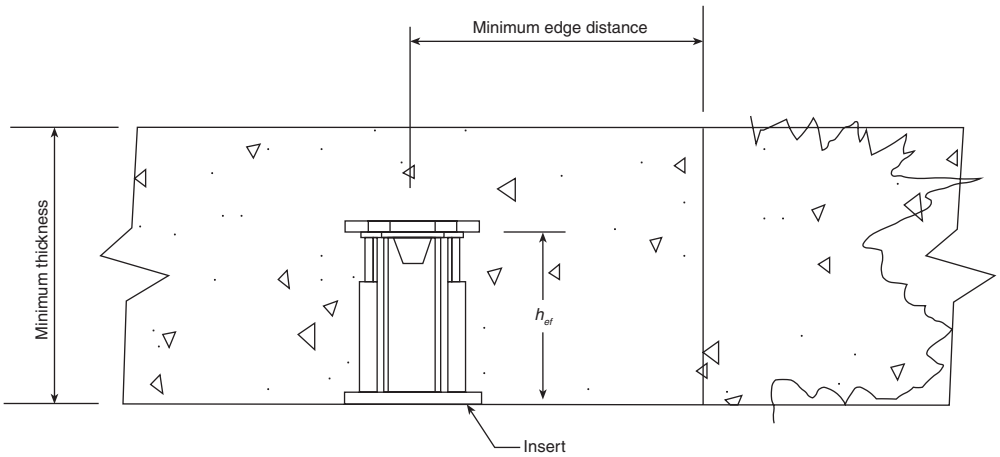

Note: h_{ef} is the effective embedment depth given in Tables 18.5.12.2(g) through (j).

FIGURE A.18.5.12(b) *Wood Form Insert.*

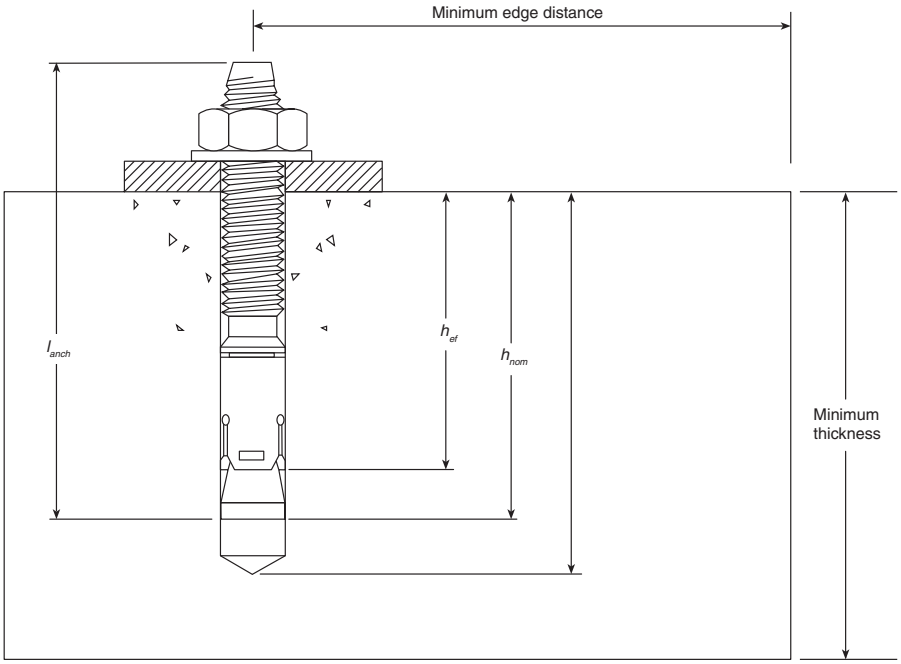

Note: h_{nom} is the nominal embedment depth given in Tables 18.5.12.2(a) through (e).

FIGURE A.18.5.12(c) *Wedge Anchor.*

EDUFIRE.IR

wedge against the wall of the hole. Undercut anchors might or might not be torque-controlled. Typically, the main hole is drilled, a special second drill bit is inserted into the hole, and flare is drilled at the base of the main hole. Some anchors are self-drilling and do not require a second drill bit. The anchor is then inserted into the hole, and when torque is applied, the bottom of the anchor flares out into the flared hole, and a mechanical lock is obtained. Consideration should be given with respect to the position near the edge of a slab and the spacing of anchors. For full capacity in Table 18.5.12.2(a) through Table 18.5.12.2(j), the edge distance spacing between anchors and the thickness of concrete should conform to the anchor manufacturer's recommendations.

Calculation of ASD shear and tension values to be used in A.18.5.12.2 calculations should be performed in accordance with ACI 318, Chapter 17 formulas using the variables and recommendations obtained from the approved evaluation service reports (such as ICC-ES Reports) for a particular anchor, which should then be adjusted to ASD values. All post-installed concrete anchors must be prequalified in accordance with ACI 355.2, *Qualification of Post-Installed Mechanical Anchors in Concrete and Commentary*, or other approved qualification procedures (ASCE/SEI 7, *Minimum Design Loads for Buildings and Other Structures*, Section 13.4.2.3). This information is usually available from the anchor manufacturer.

The following variables are among those contained in the approved evaluation reports for use in ACI 318, Chapter 17 calculations. These variables do not include the allowable tension and shear capacities but do provide the information needed to calculate them. The strength

DESIGNER'S CORNER [18.5.12]

How should a fastener to connect an earthquake brace to the building structure be selected?

There are three different types of fasteners that can be used to connect the brace to the building structure: unlisted common fasteners discussed in Figure 18.5.12.1 and Table 18.5.12.2(a) through Table 18.5.12.2(j), listed fasteners, and fastener arrangements designed by a professional engineer. All three fastener situations have to be proven to handle the horizontal load created by the earthquake, which will be done by following the loads in Figure 18.5.12.1, using the fastener in accordance with its listing, or following the design of the professional engineer. In many situations, the type of structural member will help the user determine which type of fastener to use. Where the ceiling slab is concrete, a post-installed anchor is commonly used, whereas a through-bolt or lag screw would be used where the structural member is wood.

In situations where the fastener is being used in accordance with Figure 18.5.12.1 and Table 18.5.12.2(a) through Table 18.5.12.2(j), the user will need to determine two important factors:

1. The angle that the brace will make with the vertical
2. The direction that the fastener will be inserted into the structural member relative to the horizontal force that will be applied by an earthquake

Each factor is divided into three categories, resulting in nine different combinations of brace angle and fastener direction. These nine combinations are designated A, B, C, D, E, F, G, H, and I in Figure 18.5.12.1 and Table 18.5.12.2(a) through Table 18.5.12.2(j).

Configurations A, B, and C are the only ones to use when the fastener is driven vertically up into a structural member. The difference between A, B, and C is the angle that the brace makes with the vertical. The greater the angle with the vertical, the more horizontal the brace and the more load that the fastener can handle. In all three configurations, the fastener would experience sheer stress from the horizontal force of the earthquake but would be in tension (wanting to pull the fastener out) from gravity.

In situations D, E, and F, the fastener is driven horizontally into the side of a structural member in a direction perpendicular to the run of the brace. In this case, as the brace angle increases, the ability of the fastener to handle the load decreases. In all three configurations, the fastener experiences sheer stress from both the earthquake and gravity.

Situations G, H, and I are similar to D, E, and F with the fastener driven horizontally into the side of the structural member. In this case, however, the fastener is in the same direction as the run of the brace. As the brace angle increases, the load that the fastener can handle increases. The fastener experiences tension from the earthquake force and sheer stress from gravity.

The user of NFPA 13 must ensure that the fastener can handle the loads created by an earthquake. Often the fastener is the weak link in the earthquake brace. If the fastener cannot handle the load, it makes no difference whether the rest of the brace is strong — the sprinkler system will not be kept in place.

EDUFIRE.IR

design capacities must be calculated using the appropriate procedures in ACI 318, Chapter 17, and then converted to allowable stress design capacities.

D_a = anchor diameter
L_{anch} = total anchor length
h_{nom} = nominal embedment
h_{ef} = effective embedment
h_{min} = minimum concrete thickness
C_{ac} = critical edge distance
N_{sa} = steel strength in tension
l_e = length of anchor in shear
$N_{p,cr}$ = pull-out strength cracked concrete
K_{cp} = coefficient for pryout strength
$V_{sa,eq}$ = shear strength single anchor seismic loads
$V_{st.deck,eq}$ = shear strength single anchor seismic loads installed through the soffit of the metal deck

18.5.12.1 The designated angle category for the fastener(s) used in the sway brace installation shall be determined in accordance with Figure 18.5.12.1.

18.5.12.2* For individual fasteners, unless alternative allowable loads are determined and certified by a registered professional engineer, the loads determined in 18.5.9 shall not exceed the allowable loads provided in Table 18.5.12.2(a) through Table 18.5.12.2(m) or 18.5.12.7.

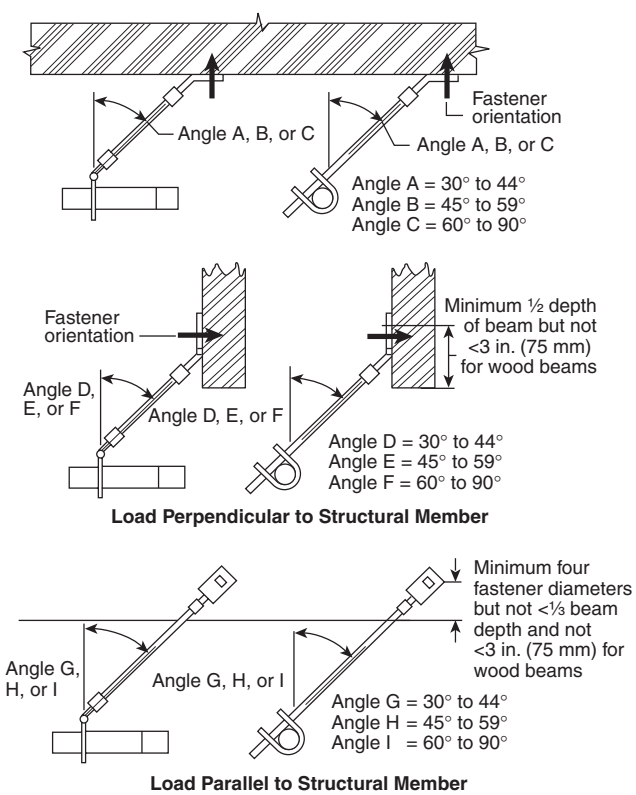

FIGURE 18.5.12.1 *Designation of Angle Category Based on Angle of Sway Brace and Fastener Orientation.*

EDUFIRE.IR

TABLE 18.5.12.2(a) *Maximum Load for Wedge Anchors in 3000 psi (207 bar) Lightweight Cracked Concrete on Metal Deck*

Wedge Anchors in 3000 psi Sand Lightweight Cracked Concrete on 4½ in. Flute Width Metal Deck (lb)												
Diameter (in.)	***Min. Nom. Embedment (in.)***	***Min. Slab Thickness (in.)***	***Max. Flute Center Offset (in.)***	***A***	***B***	***C***	***D***	***E***	***F***	***G***	***H***	***I***
				***Pr* ≤ 2.0**	***Pr* ≤ 1.1**	***Pr* ≤ 0.7**	***Pr* ≤ 1.2**	***Pr* ≤ 1.1**	***Pr* ≤ 1.1**	***Pr* ≤ 1.4**	***Pr* ≤ 0.9**	***Pr* ≤ 0.8**
⅜	2.375	6.25	1	123	183	233	—	—	—	—	—	—
½	3.750	6.25	1	147	231	310	—	—	—	—	—	—
⅝	3.875	6.25	1	188	292	387	—	—	—	—	—	—
¾	4.500	6.25	1	255	380	486						
				***Pr* 2.1–3.5**	***Pr* 1.2–1.8**	***Pr* 0.8–1.0**	***Pr* 1.3–1.7**	***Pr* 1.2–1.8**	***Pr* 1.2–2.0**	***Pr* 1.5–1.9**	***Pr* 1.0–1.3**	***Pr* 0.9–1.1**
⅜	2.375	6.25	1	79	133	193	—	—	—	—	—	—
½	3.750	6.25	1	86	160	247	—	—	—	—	—	—
⅝	3.875	6.25	1	113	204	311	—	—	—	—	—	—
¾	4.500	6.25	1	165	275	402	—	—	—	—	—	—
				***Pr* 3.6–5.0**	***Pr* 1.9–2.5**	***Pr* 1.1–1.3**	***Pr* 1.8–2.2**	***Pr* 1.9–2.5**	***Pr* 2.1–2.9**	***Pr* 2.0–2.4**	***Pr* 1.4–1.7**	***Pr* 1.2–1.4**
⅜	2.375	6.25	1	56	104	165	—	—	—	—	—	—
½	3.750	6.25	1	60	121	205	—	—	—	—	—	—
⅝	3.875	6.25	1	79	157	260	—	—	—	—	—	—
¾	4.500	6.25	1	116	216	343	—	—	—	—	—	—
				***Pr* 5.1–6.5**	***Pr* 2.6–3.2**	***Pr* 1.4–1.6**	***Pr* 2.3–2.7**	***Pr* 2.6–3.2**	***Pr* 3.0–3.8**	***Pr* 2.5–2.9**	***Pr* 1.8–2.1**	***Pr* 1.5–1.7**
⅜	2.375	6.25	1	43	85	144	—	—	—	—	—	—
½	3.750	6.25	1	46	94	175	—	—	—	—	—	—
⅝	3.875	6.25	1	60	124	224	—	—	—	—	—	—
¾	4.500	6.25	1	89	177	299	—	—	—	—	—	—

**Pr* = Prying factor range. (Refer to A.18.5.12.2 for additional information.)

TABLE 18.5.12.2(b) *Maximum Load for Wedge Anchors in 3000 psi (207 bar) Lightweight Cracked Concrete*

Wedge Anchors in 3000 psi Lightweight Cracked Concrete (lb)												
Diameter (in.)	***Min. Nom. Embedment (in.)***	***Min. Slab Thickness (in.)***	***Min. Edge Distance (in.)***	***A***	***B***	***C***	***D***	***E***	***F***	***G***	***H***	***I***
				***Pr* ≤ 2.0**	***Pr* ≤ 1.1**	***Pr* ≤ 0.7**	***Pr* ≤ 1.2**	***Pr* ≤ 1.1**	***Pr* ≤ 1.1**	***Pr* ≤ 1.4**	***Pr* ≤ 0.9**	***Pr* ≤ 0.8**
⅜	2.375	5	4	142	216	280	162	216	256	139	208	244
½	3.750	6	6	200	314	419	243	314	362	209	312	365
⅝	3.875	6	6	259	394	512	297	394	467	255	380	446
¾	4.500	7	8	356	552	731	424	552	641	365	544	636
				***Pr* 2.1–3.5**	***Pr* 1.2–1.8**	***Pr* 0.8–1.0**	***Pr* 1.3–1.7**	***Pr* 1.2–1.8**	***Pr* 1.2–2.0**	***Pr* 1.5–1.9**	***Pr* 1.0–1.3**	***Pr* 0.9–1.1**
⅜	2.375	5	4	89	154	229	133	154	157	117	170	204
½	3.750	6	6	119	218	335	195	218	209	172	250	299
⅝	3.875	6	6	163	281	418	244	281	286	215	311	373
¾	4.500	7	8	214	386	588	343	386	376	303	438	525

EDUFIRE.IR

TABLE 18.5.12.2(b) *Continued*

Wedge Anchors in 3000 psi Lightweight Cracked Concrete (lb)

Diameter (in.)	*Min. Nom. Embedment (in.)*	*Min. Slab Thickness (in.)*	*Min. Edge Distance (in.)*	*A*	*B*	*C*	*D*	*E*	*F*	*G*	*H*	*I*
				***Pr* 3.6–5.0**	***Pr* 1.9–2.5**	***Pr* 1.1–1.3**	***Pr* 1.8–2.2**	***Pr* 1.9–2.5**	***Pr* 2.1–2.9**	***Pr* 2.0–2.4**	***Pr* 1.4–1.7**	***Pr* 1.2–1.4**
3/8	2.375	5	4	62	119	194	113	119	108	101	144	175
1/2	3.750	6	6	83	167	279	163	167	144	147	208	254
5/8	3.875	6	6	113	218	354	207	218	197	186	263	320
3/4	4.500	7	8	150	297	492	288	297	259	259	367	447
				***Pr* 5.1–6.5**	***Pr* 2.6–3.2**	***Pr* 1.4–1.6**	***Pr* 2.3–2.7**	***Pr* 2.6–3.2**	***Pr* 3.0–3.8**	***Pr* 2.5–2.9**	***Pr* 1.8–2.1**	***Pr* 1.5–1.7**
3/8	2.375	5	4	47	97	168	98	97	82	89	125	154
1/2	3.750	6	6	63	130	239	140	130	109	128	178	220
5/8	3.875	6	6	87	178	306	179	178	150	163	228	281
3/4	4.500	7	8	115	234	422	248	234	197	226	315	389

**Pr* = Prying factor range. (Refer to A.18.5.12.2 for additional information.)

TABLE 18.5.12.2(c) *Maximum Load for Wedge Anchors in 3000 psi (207 bar) Normal Weight Cracked Concrete*

Wedge Anchors in 3000 psi Normal Weight Cracked Concrete (lb)

Diameter (in.)	*Min. Nom. Embedment (in.)*	*Min. Slab Thickness (in.)*	*Min. Edge Distance (in.)*	*A*	*B*	*C*	*D*	*E*	*F*	*G*	*H*	*I*
				***Pr* < 2.0**	***Pr* < 1.1**	***Pr* < 0.7**	***Pr* < 1.2**	***Pr* < 1.1**	***Pr* < 1.1**	***Pr* < 1.4**	***Pr* < 0.9**	***Pr* < 0.8**
3/8	2.375	5	4	189	274	342	197	274	340	170	251	297
1/2	3.750	6	6	272	423	563	326	423	490	281	419	490
5/8	3.875	6	6	407	623	814	472	623	733	406	605	709
3/4	4.500	7	8	613	940	1232	715	940	1104	615	916	1073
				***Pr* 2.1–3.5**	***Pr* 1.2–1.8**	***Pr* 0.8–1.0**	***Pr* 1.3–1.7**	***Pr* 1.2–1.8**	***Pr* 1.2–2.0**	***Pr* 1.5–1.9**	***Pr* 1.0–1.3**	***Pr* 0.9–1.1**
3/8	2.375	5	4	125	203	288	167	203	219	147	212	256
1/2	3.750	6	6	162	295	451	263	295	285	233	337	403
5/8	3.875	6	6	252	441	662	386	441	442	341	492	590
3/4	4.500	7	8	378	665	999	583	665	662	515	744	892
				***Pr* 3.6–5.0**	***Pr* 1.9–2.5**	***Pr* 1.1–1.3**	***Pr* 1.8–2.2**	***Pr* 1.9–2.5**	***Pr* 2.1–2.9**	***Pr* 2.0–2.4**	***Pr* 1.4–1.7**	***Pr* 1.2–1.4**
3/8	2.375	5	4	92	162	249	145	162	159	130	184	225
1/2	3.750	6	6	113	226	377	220	226	196	199	281	342
5/8	3.875	6	6	176	341	557	326	341	304	293	415	506
3/4	4.500	7	8	264	514	841	493	514	456	443	627	763
				***Pr* 5.1–6.5**	***Pr* 2.6–3.2**	***Pr* 1.4–1.6**	***Pr* 2.3–2.7**	***Pr* 2.6–3.2**	***Pr* 3.0–3.8**	***Pr* 2.5–2.9**	***Pr* 1.8–2.1**	***Pr* 1.5–1.7**
3/8	2.375	5	4	70	134	220	128	134	121	116	162	200
1/2	3.750	6	6	87	178	323	190	178	149	173	241	298
5/8	3.875	6	6	135	276	481	283	276	232	258	359	442
3/4	4.500	7	8	203	413	725	426	413	348	389	541	667

**Pr* = Prying factor range. (Refer to A.18.5.12.2 for additional information.)

EDUFIRE.IR

TABLE 18.5.12.2(d) *Maximum Load for Wedge Anchors in 4000 psi (276 bar) Normal Weight Cracked Concrete*

Wedge Anchors in 4000 psi Normal Weight Cracked Concrete (lb)												
Diameter (in.)	*Min. Nom. Embedment (in.)*	*Min. Slab Thickness (in.)*	*Min. Edge Distance (in.)*	*A*	*B*	*C*	*D*	*E*	*F*	*G*	*H*	*I*
				Pr ≤ 2.0	*Pr* ≤ 1.1	*Pr* ≤ 0.7	*Pr* ≤ 1.2	*Pr* ≤ 1.1	*Pr* ≤ 1.1	*Pr* ≤ 1.4	*Pr* ≤ 0.9	*Pr* ≤ 0.8
3/8	2.375	5	4	206	293	360	208	293	370	179	264	313
1/2	3.750	6	6	304	466	610	353	466	548	304	453	531
5/8	3.875	6	6	469	716	935	542	716	844	467	694	814
3/4	4.500	7	8	657	997	1293	750	997	1182	646	959	1125
				***Pr* 2.1–3.5**	***Pr* 1.2–1.8**	***Pr* 0.8–1.0**	***Pr* 1.3–1.7**	***Pr* 1.2–1.8**	***Pr* 1.2–2.0**	***Pr* 1.5–1.9**	***Pr* 1.0–1.3**	***Pr* 0.9–1.1**
3/8	2.375	5	4	138	221	307	178	221	242	157	226	272
1/2	3.750	6	6	188	330	495	289	330	330	255	368	442
5/8	3.875	6	6	291	508	761	444	508	511	392	566	678
3/4	4.500	7	8	414	711	1057	617	711	725	544	786	942
				***Pr* 3.6–5.0**	***Pr* 1.9–2.5**	***Pr* 1.1–1.3**	***Pr* 1.8–2.2**	***Pr* 1.9–2.5**	***Pr* 2.1–2.9**	***Pr* 2.0–2.4**	***Pr* 1.4–1.7**	***Pr* 1.2–1.4**
3/8	2.375	5	4	103	177	268	156	177	179	139	197	241
1/2	3.750	6	6	131	255	417	244	255	227	219	310	378
5/8	3.875	6	6	203	393	641	375	393	352	337	477	582
3/4	4.500	7	8	289	553	894	524	553	500	470	665	810
				***Pr* 5.1–6.5**	***Pr* 2.6–3.2**	***Pr* 1.4–1.6**	***Pr* 2.3–2.7**	***Pr* 2.6–3.2**	***Pr* 3.0–3.8**	***Pr* 2.5–2.9**	***Pr* 1.8–2.1**	***Pr* 1.5–1.7**
3/8	2.375	5	4	80	148	237	139	148	138	125	175	216
1/2	3.750	6	6	100	205	360	211	205	173	192	268	330
5/8	3.875	6	6	156	319	554	325	319	268	296	413	509
3/4	4.500	7	8	222	452	774	455	452	381	414	577	711

**Pr* = Prying factor range. (Refer to A.18.5.12.2 for additional information.)

TABLE 18.5.12.2(e) *Maximum Load for Wedge Anchors in 6000 psi (414 bar) Normal Weight Cracked Concrete*

Wedge Anchors in 6000 psi Normal Weight Cracked Concrete (lb)												
Diameter (in.)	*Min. Nom. Embedment (in.)*	*Min. Slab Thickness (in.)*	*Min. Edge Distance (in.)*	*A*	*B*	*C*	*D*	*E*	*F*	*G*	*H*	*I*
				Pr ≤ 2.0	*Pr* ≤ 1.1	*Pr* ≤ 0.7	*Pr* ≤ 1.2	*Pr* ≤ 1.1	*Pr* ≤ 1.1	*Pr* ≤ 1.4	*Pr* ≤ 0.9	*Pr* ≤ 0.8
3/8	2.375	5	4	225	313	379	219	313	402	189	277	329
1/2	3.750	6	6	354	529	676	392	529	637	337	500	589
5/8	3.875	6	6	546	812	1036	601	812	981	517	766	902
3/4	4.500	7	8	763	1127	1429	829	1127	1370	714	1055	1243
				***Pr* 2.1–3.5**	***Pr* 1.2–1.8**	***Pr* 0.8–1.0**	***Pr* 1.3–1.7**	***Pr* 1.2–1.8**	***Pr* 1.2–2.0**	***Pr* 1.5–1.9**	***Pr* 1.0–1.3**	***Pr* 0.9–1.1**
3/8	2.375	5	4	153	240	327	190	240	267	167	240	289
1/2	3.750	6	6	228	382	559	326	382	400	287	414	498
5/8	3.875	6	6	353	589	859	500	589	617	441	636	764
3/4	4.500	7	8	496	822	1190	693	822	868	611	881	1058

EDUFIRE.IR

TABLE 18.5.12.2(e) *Continued*

Wedge Anchors in 6000 psi Normal Weight Cracked Concrete (lb)												
Diameter (in.)	*Min. Nom. Embedment (in.)*	*Min. Slab Thickness (in.)*	*Min. Edge Distance (in.)*	*A*	*B*	*C*	*D*	*E*	*F*	*G*	*H*	*I*
				***Pr* 3.6–5.0**	***Pr* 1.9–2.5**	***Pr* 1.1–1.3**	***Pr* 1.8–2.2**	***Pr* 1.9–2.5**	***Pr* 2.1–2.9**	***Pr* 2.0–2.4**	***Pr* 1.4–1.7**	***Pr* 1.2–1.4**
⅜	2.375	5	4	115	194	288	168	194	200	149	211	258
½	3.750	6	6	161	299	477	279	299	278	250	354	431
⅝	3.875	6	6	249	462	733	429	462	431	384	544	663
¾	4.500	7	8	354	647	1019	596	647	612	534	756	921
				***Pr* 5.1–6.5**	***Pr* 2.6–3.2**	***Pr* 1.4–1.6**	***Pr* 2.3–2.7**	***Pr* 2.6–3.2**	***Pr* 3.0–3.8**	***Pr* 2.5–2.9**	***Pr* 1.8–2.1**	***Pr* 1.5–1.7**
⅜	2.375	5	4	91	163	257	150	163	157	135	189	233
½	3.750	6	6	123	246	415	243	246	212	221	308	380
⅝	3.875	6	6	192	380	639	375	380	329	341	475	585
¾	4.500	7	8	272	533	891	523	533	467	475	662	815

**Pr* = Prying factor range. (Refer to A.18.5.12.2 for additional information.)

TABLE 18.5.12.2(f) *Maximum Load for Metal Deck Inserts in 3000 psi (207 bar) Lightweight Cracked Concrete on Metal Deck*

Metal Deck Inserts in 3000 psi Sand Lightweight Cracked Concrete on 4½ in. Flute Width Metal Deck (lb)												
Diameter (in.)	*Min. Effect. Embedment (in.)*	*Min. Slab Thickness (in.)*	*Max. Flute Center Offset (in.)*	*A*	*B*	*C*	*D*	*E*	*F*	*G*	*H*	*I*
				***Pr* ≤ 2.0**	***Pr* ≤ 1.1**	***Pr* ≤ 0.7**	***Pr* ≤ 1.2**	***Pr* ≤ 1.1**	***Pr* ≤ 1.1**	***Pr* ≤ 1.4**	***Pr* ≤ 0.9**	***Pr* ≤ 0.8**
⅜	1.750	6.25	1	135	192	236	—	—	—	—	—	—
½	1.750	6.25	1	138	199	247	—	—	—	—	—	—
⅝	1.750	6.25	1	138	199	247	—	—	—	—	—	—
¾	1.750	6.25	1	164	257	344						
				***Pr* 2.1–3.5**	***Pr* 1.2–1.8**	***Pr* 0.8–1.0**	***Pr* 1.3–1.7**	***Pr* 1.2–1.8**	***Pr* 1.2–2.0**	***Pr* 1.5–1.9**	***Pr* 1.0–1.3**	***Pr* 0.9–1.1**
⅜	1.750	6.25	1	90	144	201	—	—	—	—	—	—
½	1.750	6.25	1	91	148	209	—	—	—	—	—	—
⅝	1.750	6.25	1	91	148	209	—	—	—	—	—	—
¾	1.750	6.25	1	97	178	275	—	—	—	—	—	—
				***Pr* 3.6–5.0**	***Pr* 1.9–2.5**	***Pr* 1.1–1.3**	***Pr* 1.8–2.2**	***Pr* 1.9–2.5**	***Pr* 2.1–2.9**	***Pr* 2.0–2.4**	***Pr* 1.4–1.7**	***Pr* 1.2–1.4**
⅜	1.750	6.25	1	67	115	175	—	—	—	—	—	—
½	1.750	6.25	1	67	118	181	—	—	—	—	—	—
⅝	1.750	6.25	1	67	118	181	—	—	—	—	—	—
¾	1.750	6.25	1	67	136	229	—	—	—	—	—	—
				***Pr* 5.1–6.5**	***Pr* 2.6–3.2**	***Pr* 1.4–1.6**	***Pr* 2.3–2.7**	***Pr* 2.6–3.2**	***Pr* 3.0–3.8**	***Pr* 2.5–2.9**	***Pr* 1.8–2.1**	***Pr* 1.5–1.7**
⅜	1.750	6.25	1	52	96	155	—	—	—	—	—	—
½	1.750	6.25	1	52	98	160	—	—	—	—	—	—
⅝	1.750	6.25	1	52	98	160	—	—	—	—	—	—
¾	1.750	6.25	1	52	106	196	—	—	—	—	—	—

**Pr* = Prying factor range. (Refer to A.18.5.12.2 for additional information.)

EDUFIRE.IR

TABLE 18.5.12.2(g) *Maximum Load for Wood Form Inserts in 3000 psi (207 bar) Lightweight Cracked Concrete*

Wood Form Inserts in 3000 psi Lightweight Cracked Concrete (lb)												
Diameter (in.)	*Min. Effect. Embedment (in.)*	*Min. Slab Thickness (in.)*	*Min. Edge Distance (in.)*	*A*	*B*	*C*	*D*	*E*	*F*	*G*	*H*	*I*
				Pr ≤ 2.0	*Pr* ≤ 1.1	*Pr* ≤ 0.7	*Pr* ≤ 1.2	*Pr* ≤ 1.1	*Pr* ≤ 1.1	*Pr* ≤ 1.4	*Pr* ≤ 0.9	*Pr* ≤ 0.8
3/8	1.100	4	6	224	316	387	223	316	401	193	283	336
1/2	1.690	4	6	252	376	480	278	376	454	239	355	418
5/8	1.750	4	8	252	376	480	278	376	454	239	355	418
3/4	1.750	4	8	252	376	480	278	376	454	239	355	418
				***Pr* 2.1–3.5**	***Pr* 1.2–1.8**	***Pr* 0.8–1.0**	***Pr* 1.3–1.7**	***Pr* 1.2–1.8**	***Pr* 1.2–2.0**	***Pr* 1.5–1.9**	***Pr* 1.0–1.3**	***Pr* 0.9–1.1**
3/8	1.100	4	6	150	239	331	192	239	264	169	243	293
1/2	1.690	4	6	163	272	398	231	272	286	204	294	354
5/8	1.750	4	8	163	272	398	231	272	286	204	294	354
3/4	1.750	4	8	163	272	398	231	272	286	204	294	354
				***Pr* 3.6–5.0**	***Pr* 1.9–2.5**	***Pr* 1.1–1.3**	***Pr* 1.8–2.2**	***Pr* 1.9–2.5**	***Pr* 2.1–2.9**	***Pr* 2.0–2.4**	***Pr* 1.4–1.7**	***Pr* 1.2–1.4**
3/8	1.100	4	6	113	193	290	169	193	196	150	213	260
1/2	1.690	4	6	115	213	339	198	213	199	178	251	307
5/8	1.750	4	8	115	213	339	198	213	199	178	251	307
3/4	1.750	4	8	115	213	339	198	213	199	178	251	307
				***Pr* 5.1–6.5**	***Pr* 2.6–3.2**	***Pr* 1.4–1.6**	***Pr* 2.3–2.7**	***Pr* 2.6–3.2**	***Pr* 3.0–3.8**	***Pr* 2.5–2.9**	***Pr* 1.8–2.1**	***Pr* 1.5–1.7**
3/8	1.100	4	6	88	161	257	150	161	152	135	190	234
1/2	1.690	4	6	88	175	296	173	175	152	157	219	271
5/8	1.750	4	8	88	175	296	173	175	152	157	219	271
3/4	1.750	4	8	88	175	296	173	175	152	157	219	271

**Pr* = Prying factor range. (Refer to A.18.5.12.2 for additional information.)

TABLE 18.5.12.2(h) *Maximum Load for Wood Form Inserts in 3000 psi (207 bar) Normal Weight Cracked Concrete*

Wood Form Inserts in 3000 psi Normal Weight Cracked Concrete (lb)												
Diameter (in.)	*Min. Effect. Embedment (in.)*	*Min. Slab Thickness (in.)*	*Min. Edge Distance (in.)*	*A*	*B*	*C*	*D*	*E*	*F*	*G*	*H*	*I*
				Pr ≤ 2.0	*Pr* ≤ 1.1	*Pr* ≤ 0.7	*Pr* ≤ 1.2	*Pr* ≤ 1.1	*Pr* ≤ 1.1	*Pr* ≤ 1.4	*Pr* ≤ 0.9	*Pr* ≤ 0.8
3/8	1.100	4	6	248	342	411	237	342	444	205	300	357
1/2	1.690	4	6	297	443	565	327	443	535	282	418	492
5/8	1.750	4	8	297	443	565	327	443	535	282	418	492
3/4	1.750	4	8	297	443	565	327	443	535	282	418	492
				***Pr* 2.1–3.5**	***Pr* 1.2–1.8**	***Pr* 0.8–1.0**	***Pr* 1.3–1.7**	***Pr* 1.2–1.8**	***Pr* 1.2–2.0**	***Pr* 1.5–1.9**	***Pr* 1.0–1.3**	***Pr* 0.9–1.1**
3/8	1.100	4	6	170	264	357	207	264	298	182	261	315
1/2	1.690	4	6	192	321	468	272	321	336	240	347	416
5/8	1.750	4	8	192	321	468	272	321	336	240	347	416
3/4	1.750	4	8	192	321	468	272	321	336	240	347	416

EDUFIRE.IR

TABLE 18.5.12.2(h) *Continued*

Wood Form Inserts in 3000 psi Normal Weight Cracked Concrete (lb)

Diameter (in.)	*Min. Effect. Embedment (in.)*	*Min. Slab Thickness (in.)*	*Min. Edge Distance (in.)*	*A*	*B*	*C*	*D*	*E*	*F*	*G*	*H*	*I*
				***Pr* 3.6–5.0**	***Pr* 1.9–2.5**	***Pr* 1.1–1.3**	***Pr* 1.8–2.2**	***Pr* 1.9–2.5**	***Pr* 2.1–2.9**	***Pr* 2.0–2.4**	***Pr* 1.4–1.7**	***Pr* 1.2–1.4**
⅜	1.100	4	6	129	215	315	184	215	224	163	231	282
½	1.690	4	6	135	251	399	233	251	235	209	296	361
⅝	1.750	4	8	135	251	399	233	251	235	209	296	361
¾	1.750	4	8	135	251	399	233	251	235	209	296	361
				***Pr* 5.1–6.5**	***Pr* 2.6–3.2**	***Pr* 1.4–1.6**	***Pr* 2.3–2.7**	***Pr* 2.6–3.2**	***Pr* 3.0–3.8**	***Pr* 2.5–2.9**	***Pr* 1.8–2.1**	***Pr* 1.5–1.7**
⅜	1.100	4	6	104	181	282	165	181	179	148	208	256
½	1.690	4	6	104	207	348	204	207	179	185	258	319
⅝	1.750	4	8	104	207	348	204	207	179	185	258	319
¾	1.750	4	8	104	207	348	204	207	179	185	258	319

**Pr* = Prying factor range. (Refer to A.18.5.12.2 for additional information.)

TABLE 18.5.12.2(i) *Maximum Load for Wood Form Inserts in 4000 psi (276 bar) Normal Weight Cracked Concrete*

Wood Form Inserts in 4000 psi Normal Weight Cracked Concrete (lb)

Diameter (in.)	*Min. Effect. Embedment (in.)*	*Min. Slab Thickness (in.)*	*Min. Edge Distance (in.)*	*A*	*B*	*C*	*D*	*E*	*F*	*G*	*H*	*I*
				***Pr* ≤ 2.0**	***Pr* ≤ 1.1**	***Pr* ≤ 0.7**	***Pr* ≤ 1.2**	***Pr* ≤ 1.1**	***Pr* ≤ 1.1**	***Pr* ≤ 1.4**	***Pr* ≤ 0.9**	***Pr* ≤ 0.8**
⅜	1.100	4	6	270	364	431	249	364	482	215	313	374
½	1.690	4	6	335	493	623	361	493	602	311	459	541
⅝	1.750	4	8	344	511	653	378	511	618	326	482	568
¾	1.750	4	8	344	511	653	378	511	618	326	482	568
				***Pr* 2.1–3.5**	***Pr* 1.2–1.8**	***Pr* 0.8–1.0**	***Pr* 1.3–1.7**	***Pr* 1.2–1.8**	***Pr* 1.2–2.0**	***Pr* 1.5–1.9**	***Pr* 1.0–1.3**	***Pr* 0.9–1.1**
⅜	1.100	4	6	188	287	379	220	287	330	193	277	334
½	1.690	4	6	218	361	520	303	361	382	266	384	462
⅝	1.750	4	8	222	371	541	315	371	389	278	400	481
¾	1.750	4	8	222	371	541	315	371	389	278	400	481
				***Pr* 3.6–5.0**	***Pr* 1.9–2.5**	***Pr* 1.1–1.3**	***Pr* 1.8–2.2**	***Pr* 1.9–2.5**	***Pr* 2.1–2.9**	***Pr* 2.0–2.4**	***Pr* 1.4–1.7**	***Pr* 1.2–1.4**
⅜	1.100	4	6	145	236	338	197	236	251	175	247	302
½	1.690	4	6	157	284	446	261	284	271	233	330	403
⅝	1.750	4	8	157	290	461	270	290	271	242	342	417
¾	1.750	4	8	157	290	461	270	290	271	242	342	417
				***Pr* 5.1–6.5**	***Pr* 2.6–3.2**	***Pr* 1.4–1.6**	***Pr* 2.3–2.7**	***Pr* 2.6–3.2**	***Pr* 3.0–3.8**	***Pr* 2.5–2.9**	***Pr* 1.8–2.1**	***Pr* 1.5–1.7**
⅜	1.100	4	6	117	201	305	178	201	202	160	224	275
½	1.690	4	6	120	234	390	229	234	207	207	290	357
⅝	1.750	4	8	120	239	402	236	239	207	214	299	368
¾	1.750	4	8	120	239	402	236	239	207	214	299	368

**Pr* = Prying factor range. (Refer to A.18.5.12.2 for additional information.)

EDUFIRE.IR

TABLE 18.5.12.2(j) *Maximum Load for Wood Form Inserts in 6000 psi (414 bar) Normal Weight Cracked Concrete*

Wood Form Inserts in 6000 psi Normal Weight Cracked Concrete (lb)												
Diameter (in.)	*Min. Effect. Embedment (in.)*	*Min. Slab Thickness (in.)*	*Min. Edge Distance (in.)*	*A*	*B*	*C*	*D*	*E*	*F*	*G*	*H*	*I*
				Pr ≤ 2.0	*Pr* ≤ 1.1	*Pr* ≤ 0.7	*Pr* ≤ 1.2	*Pr* ≤ 1.1	*Pr* ≤ 1.1	*Pr* ≤ 1.4	*Pr* ≤ 0.9	*Pr* ≤ 0.8
3/8	1.100	4	6	302	395	458	264	395	537	228	332	397
1/2	1.690	4	6	385	551	680	394	551	690	339	499	591
5/8	1.750	4	8	421	627	800	463	627	756	399	591	696
3/4	1.750	4	8	421	627	800	463	627	756	399	591	696
				***Pr* 2.1–3.5**	***Pr* 1.2–1.8**	***Pr* 0.8–1.0**	***Pr* 1.3–1.7**	***Pr* 1.2–1.8**	***Pr* 1.2–2.0**	***Pr* 1.5–1.9**	***Pr* 1.0–1.3**	***Pr* 0.9–1.1**
3/8	1.100	4	6	216	319	409	237	319	379	207	297	360
1/2	1.690	4	6	256	413	578	336	413	449	296	426	512
5/8	1.750	4	8	272	454	662	386	454	476	340	491	589
3/4	1.750	4	8	272	454	662	386	454	476	340	491	589
				***Pr* 3.6–5.0**	***Pr* 1.9–2.5**	***Pr* 1.1–1.3**	***Pr* 1.8–2.2**	***Pr* 1.9–2.5**	***Pr* 2.1–2.9**	***Pr* 2.0–2.4**	***Pr* 1.4–1.7**	***Pr* 1.2–1.4**
3/8	1.100	4	6	169	267	370	215	267	292	190	270	329
1/2	1.690	4	6	192	330	503	293	330	332	262	371	452
5/8	1.750	4	8	192	356	565	331	356	332	296	419	511
3/4	1.750	4	8	192	356	565	331	356	332	296	419	511
				***Pr* 5.1–6.5**	***Pr* 2.6–3.2**	***Pr* 1.4–1.6**	***Pr* 2.3–2.7**	***Pr* 2.6–3.2**	***Pr* 3.0–3.8**	***Pr* 2.5–2.9**	***Pr* 1.8–2.1**	***Pr* 1.5–1.7**
3/8	1.100	4	6	138	229	337	196	229	238	176	246	303
1/2	1.690	4	6	147	275	445	260	275	253	235	328	405
5/8	1.750	4	8	147	293	493	289	293	253	263	366	451
3/4	1.750	4	8	147	293	493	289	293	253	263	366	451

**Pr* = Prying factor range. (Refer to A.18.5.12.2 for additional information.)

TABLE 18.5.12.2(k) *Maximum Load for Connections to Steel Using Unfinished Steel Bolts*

Connections to Steel (Values Assume Bolt Perpendicular to Mounting Surface)																	
Diameter of Unfinished Steel Bolt (in.)																	
1/4									3/8								
A	*B*	*C*	*D*	*E*	*F*	*G*	*H*	*I*	*A*	*B*	*C*	*D*	*E*	*F*	*G*	*H*	*I*
400	500	600	300	500	650	325	458	565	900	1200	1400	800	1200	1550	735	1035	1278
Diameter of Unfinished Steel Bolt (in.)																	
1/2									5/8								
A	*B*	*C*	*D*	*E*	*F*	*G*	*H*	*I*	*A*	*B*	*C*	*D*	*E*	*F*	*G*	*H*	*I*
1600	2050	2550	1450	2050	2850	1300	1830	2260	2500	3300	3950	2250	3300	4400	2045	2880	3557

EDUFIRE.IR

TABLE 18.5.12.2(l) *Maximum Load for Through-Bolts in Sawn Lumber or Glue-Laminated Timbers*

Through-Bolts in Sawn Lumber or Glue-Laminated Timbers (Load Perpendicular to Grain)																												
Length of Bolt in Timber (in.)		***Bolt Diameter (in.)***																										
		1/2									*5/8*										*3/4*							
		A	***B***	***C***	***D***	***E***	***F***	***G***	***H***	***I***	***A***	***B***	***C***	***D***	***E***	***F***	***G***	***H***	***I***	***A***	***B***	***C***	***D***	***E***	***F***	***G***	***H***	***I***
	1½	115	165	200	135	230	395	130	215	310	135	190	235	155	270	460	155	255	380	155	220	270	180	310	530	170	300	450
	2½	140	200	240	160	280	480	165	275	410	160	225	280	185	320	550	190	320	495	180	255	310	205	360	615	215	365	575
	3½	175	250	305	200	350	600	200	330	485	200	285	345	230	400	685	235	405	635	220	310	380	255	440	755	260	455	730
	5½	—	—	—	—	—	—	—	—	—	280	395	485	325	560	960	315	515	735	310	440	535	360	620	1065	360	610	925

Note: Wood fastener maximum capacity values are based on the 2001 National Design Specifications (NDS) for wood with a specific gravity of 0.35. Values for other types of wood can be obtained by multiplying the above values by the factors in Table 18.5.12.2(n).

TABLE 18.5.12.2(m) *Maximum Load for Lag Screws and Lag Bolts in Wood*

Lag Screws and Lag Bolts in Wood (Load Perpendicular to Grain — Holes Predrilled Using Good Practice)																												
Length of Bolt in Timber (in.)		***Lag Bolt Diameter (in.)***																										
		1/2									*5/8*										*3/4*							
		A	***B***	***C***	***D***	***E***	***F***	***G***	***H***	***I***	***A***	***B***	***C***	***D***	***E***	***F***	***G***	***H***	***I***	***A***	***B***	***C***	***D***	***E***	***F***	***G***	***H***	***I***
	3½	165	190	200	170	220	310	80	120	170	—	—	—	—	—	—	—	—	—	—	—	—	—	—	—	—	—	—
	4½	180	200	200	175	235	350	80	120	170	300	355	380	315	400	550	145	230	325	—	—	—	—	—	—	—	—	—
	5½	190	200	200	175	245	380	80	120	170	320	370	380	320	420	610	145	230	325	435	525	555	425	550	775	195	320	460
	6½	195	205	200	175	250	400	80	120	170	340	375	380	325	435	650	145	230	325	465	540	555	430	570	840	195	320	460

Note: Wood fastener maximum capacity values are based on the 2001 National Design Specifications (NDS) for wood with a specific gravity of 0.35. Values for other types of wood can be obtained by multiplying the above values by the factors in Table 18.5.12.2(n).

TABLE 18.5.12.2(n) *Factors for Wood Based on Specific Gravity*

Specific Gravity of Wood	***Multiplier***
0.36 thru 0.49	1.17
0.50 thru 0.65	1.25
0.66 thru 0.73	1.50

In response to the new anchor evaluation process and the revised generic load values shown in the tables within NFPA 13, the anchor manufacturers might provide alternative load tables with greater usable values for their specific anchors. Those values must be determined and certified by a registered professional engineer as per 18.5.12.2.

The example table provided in Commentary Table 18.1 would be valid only for the specifically referenced anchor make, model, installation embedment, and concrete type. Look to other anchor manufacturers to provide certified load tables for their specific anchors.

EDUFIRE.IR

COMMENTARY TABLE 18.1 *Alternative to Table 18.5.12.2(b) Maximum Load for Power-Stud + SD2 Anchors in 3000 psi (207 bar) Lightweight Cracked Concrete*

		Power-Stud+ SD2 in 3000 psi Lightweight Cracked Concrete (lb)[1,2]								
Diameter (in.)	**Embedment (in.)**	**A**	**B**	**C**	**D**	**E**	**F**	**G**	**H**	**I**
		Pr <2	*Pr* <1.1	*Pr* <0.7	*Pr* <1.2	*Pr* <1.1	*Pr* <1.1	*Pr* <1.4	*Pr* <0.9	*Pr* <0.8
⅜	2.375	150	229	300	174	229	270	150	223	261
½	3.75	326	508	677	393	508	587	338	505	590
⅝	3.875	386	615	837	486	615	695	419	628	730
¾	4.5	475	755	1022	594	755	856	511	766	891
		Pr 2.1–3.5	*Pr* 1.2–1.8	*Pr* 0.8–1.0	*Pr* 1.3–1.7	*Pr* 1.2–1.8	*Pr* 1.2–2.0	*Pr* 1.5–1.9	*Pr* 1.0–1.3	*Pr* 0.9–1.1
⅜	2.375	95	163	244	142	163	167	126	181	218
½	3.75	204	354	542	317	354	356	280	405	485
⅝	3.875	238	421	659	386	412	416	342	494	591
¾	4.5	294	518	807	472	518	513	418	605	723
		Pr 3.6–5.0	*Pr* 1.9–2.5	*Pr* 1.1–1.3	*Pr* 1.8–2.2	*Pr* 1.9–2.5	*Pr* 2.1–2.9	*Pr* 2.0–2.4	*Pr* 1.4–1.7	*Pr* 1.2–1.4
⅜	2.375	70	126	205	120	126	121	108	153	186
½	3.75	148	272	452	265	272	256	239	338	411
⅝	3.875	172	319	544	319	319	296	289	408	496
¾	4.5	212	394	667	392	394	366	354	500	609
		Pr 5.1–6.5	*Pr* 2.6–3.2	*Pr* 1.4–1.6	*Pr* 2.3–2.7	*Pr* 2.6–3.2	*Pr* 3.0–3.8	*Pr* 2.5–2.9	*Pr* 1.8–2.1	*Pr* 1.5–1.7
⅜	2.375	55	103	178	104	103	94	95	132	163
½	3.75	117	220	388	228	220	200	209	290	357
⅝	3.875	135	258	462	273	258	230	250	347	428
¾	4.5	166	318	599	335	318	285	285	426	526

[1] Values calculated in accordance with Annex E.7. See ICC-ESR 2502 for complete product and installation information.

[2] Assumptions for table: Seismic anchoring conditions, edge distance ≥ Cac, slab thickness ≥ hmin; spacing ≥ 3 hef

Courtesy of Powers Fasteners

A.18.5.12.2 The values for the concrete insert and wedge anchor tables have been developed using the following formula:

$$\left(\frac{T}{T_{allow}}\right)+\left(\frac{V}{V_{allow}}\right)\leq 1.2 \qquad \textbf{[A.18.5.12.2a]}$$

where:

T = applied service tension load, including the effect of prying ($F_{pw} \times Pr$)
F_{pw} = horizontal earthquake load
Pr = prying factor based on fitting geometry and brace angle from vertical
T_{allow} = allowable service tension load
V = applied service shear load
V_{allow} = allowable service shear load
T/T_{allow} = shall not be greater than 1.0.
V/V_{allow} = shall not be greater than 1.0.

EDUFIRE.IR

The allowable tension and shear loads come from the anchor manufacturer's published data. The design loads have been amplified by an overstrength factor of 2.0, and the allowable strength of the anchors has been increased by a factor of 1.2. The effect of prying on the tension applied to the anchor is considered when developing appropriate capacity values. The applied tension equation includes the prying effect, which varies with the orientation of the fastener in relationship to the brace necessary at various brace angles. The letters A through D in the following equations are dimensions of the attachment geometry as indicated in Figure A.18.5.12.2(a) through Figure A.18.5.12.2(c).

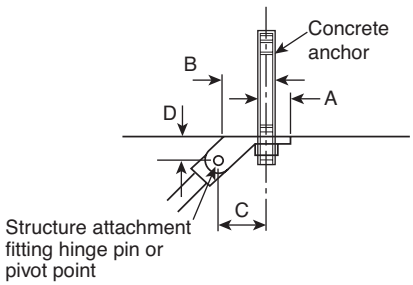

FIGURE A.18.5.12.2(a) *Dimensions of Concrete Anchor for Orientations A, B, and C.*

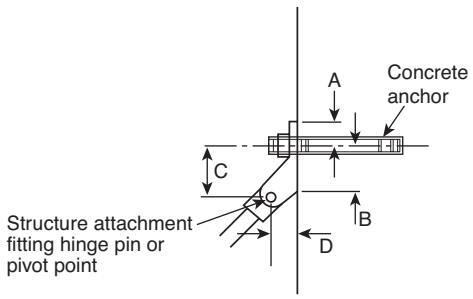

FIGURE A.18.5.12.2(b) *Dimensions of Concrete Anchor for Orientations D, E, and F.*

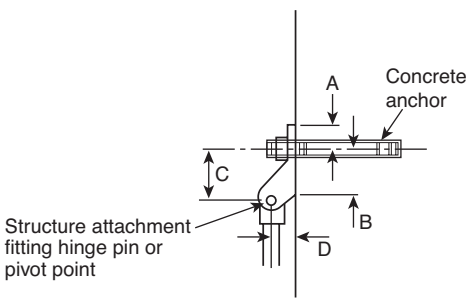

FIGURE A.18.5.12.2(c) *Dimensions of Concrete Anchor for Orientations G, H, and I.*

where:

Cr = critical angle at which prying flips to the toe or the heel of the structure attachment fitting
Pr = prying factor for service tension load effect of prying
$Tan\theta$ = tangent of brace angle from vertical
$Sin\theta$ = sine of brace angle from vertical

The greater Pr value calculated in tension or compression applies.

The Pr value cannot be less than $1.000/Tan\theta$ for designated angle category A, B, and C; 1.000 for designated angle category D, E, and F; or 0.000 for designated angle category G, H, and I.

EDUFIRE.IR

For designated angle category A, B, and C, the applied tension, including the effect of prying (*Pr*), is as follows:

$$Cr = Tan^{-1}\left(\frac{C}{D}\right) \qquad \textbf{[A.18.5.12.2b]}$$

For braces acting in **TENSION**

If *Cr* > brace angle from vertical:

$$Pr = \frac{\left(\frac{C+A}{Tan\theta}\right) - D}{A} \qquad \textbf{[A.18.5.12.2c]}$$

If *Cr* < brace angle from vertical:

$$Pr = \frac{D - \left(\frac{C-B}{Tan\theta}\right)}{B} \qquad \textbf{[A.18.5.12.2d]}$$

For braces acting in **COMPRESSION**

If *Cr* > brace angle from vertical:

$$Pr = \frac{\left(\frac{C-B}{Tan\theta}\right) - D}{B} \qquad \textbf{[A.18.5.12.2e]}$$

If *Cr* < brace angle from vertical:

$$Pr = \frac{D - \left(\frac{C+A}{Tan\theta}\right)}{A} \qquad \textbf{[A.18.5.12.2f]}$$

For designated angle category D, E, and F, the applied tension, including the effect of prying (*Pr*), is as follows:

$$Cr = Tan^{-1}\left(\frac{D}{C}\right) \qquad \textbf{[A.18.5.12.2g]}$$

For braces acting in **TENSION**

If *Cr* > brace angle from vertical:

$$Pr = \frac{\left(\frac{D}{Tan\theta}\right) - (C-B)}{B} \qquad \textbf{[A.18.5.12.2h]}$$

If *Cr* < brace angle from vertical:

$$Pr = \frac{(C_A) - \left(\frac{D}{Tan\theta}\right)}{A} \qquad \textbf{[A.18.5.12.2i]}$$

For braces acting in **COMPRESSION**

If *Cr* > brace angle from vertical:

$$Pr = \frac{\left(\frac{D}{Tan\theta}\right) - (C+A)}{A} \qquad \textbf{[A.18.5.12.2j]}$$

EDUFIRE.IR

If $Cr <$ brace angle from vertical:

$$Pr = \frac{(C - B) - \left(\frac{D}{Tan\theta}\right)}{B} \qquad \textbf{[A.18.5.12.2k]}$$

For designated angle category G, H, and I the applied tension, including the effect of prying (Pr), is as follows:

For braces acting in **TENSION**

$$Pr = \frac{\left(\frac{D}{B}\right)}{Sin\theta} \qquad \textbf{[A.18.5.12.2l]}$$

For braces acting in **COMPRESSION**

$$Pr = \frac{\left(\frac{D}{A}\right)}{Sin\theta} \qquad \textbf{[A.18.5.12.2m]}$$

The lightweight concrete anchor tables, Table 18.5.12.2(a) through Table 18.5.12.2(c) were based on sand lightweight concrete, which represents a conservative assumption for the strength of the material. For seismic applications, cracked concrete was assumed.

18.5.12.3* The type of fasteners used to secure the bracing assembly to the structure shall be limited to those shown in Table 18.5.12.2(a) through Table 18.5.12.2(m) or to listed devices.

A.18.5.12.3 Listed devices might have accompanying software that performs the calculations to determine the allowable load.

When specific details of a fitting and the fasteners are known, the load values might be higher than the generic values contained in the tables. Manufacturer information can include the details of geometry and any specific installation requirements to achieve the load capacity. Therefore, it would be worthwhile to review available components for the given situation.

18.5.12.4* For connections to wood, through-bolts with washers on each end shall be used, unless the requirements of 18.5.12.5 are met.

A.18.5.12.4 Through-bolt as described in 18.5.12.4 is intended to describe a method of bolting and attachment. It is the intent of the committee that a "through-bolt" could consist of threaded rod with a flat washer and nut on each end.

18.5.12.5 Where it is not practical to install through-bolts due to the thickness of the wood member in excess of 12 in. (300 mm) or inaccessibility, lag screws shall be permitted and holes shall be pre-drilled ⅛ in. (3 mm) smaller than the maximum root diameter of the lag screw.

18.5.12.6 Holes for through-bolts and similar listed attachments shall be 1⁄16 in. (1.6 mm) greater than the diameter of the bolt.

18.5.12.6.1 The requirements of 18.5.12 shall not apply to other fastening methods, which shall be acceptable for use if certified by a registered professional engineer to support the loads determined in accordance with the criteria in 18.5.9.

Sway brace fasteners and allowable loads to engineered wood products, which are commonly referred to as composite wood joists, are not specifically addressed in NFPA 13. Fasteners and allowable loads to a composite wood joist should be installed in accordance with the joist manufacturer's guidelines. Many manufacturers of composite wood joists have developed guidelines specifically for attaching sway braces to their products. Within those guidelines, there is detailed information addressing fastener methods, joist reinforcement, and sway brace load limitations.

EDUFIRE.IR

18.5.12.6.2 Calculations shall be submitted where required by the authority having jurisdiction.

Paragraph 18.5.12.6.1 permits fastening methods and limitations other than those specified by NFPA 13 to be used to fasten sway bracing, provided such other methods have been evaluated and certified by a registered professional engineer for the anticipated seismic loads.

18.5.12.7 Concrete Anchors.

18.5.12.7.1* Post-installed concrete anchors shall be prequalified for seismic applications in accordance with ACI 355.2, *Qualification of Post-Installed Mechanical Anchors in Concrete and Commentary*, and installed in accordance with the manufacturer's instructions.

A.18.5.12.7.1 Concrete anchors included in current Evaluation Service Reports conforming to the requirements of acceptance criteria AC193 as issued by ICC Evaluation Service, Inc. should be considered to meet ACI 355.2, *Qualification of Post-Installed Mechanical Anchors in Concrete & Commentary*.

18.5.12.7.2 Unless the requirements of 18.5.12.7.3 are met, concrete anchors shall be based on concrete strength, anchor type, designated angle category A through I, prying factor (*Pr*) range, and allowable maximum load.

(A) Sway brace manufacturers shall provide prying factors (*Pr*) based on geometry of the structure attachment fitting and the designated angle category A through I as shown in Figure 18.5.12.1.

(B) Where the prying factor for the fitting is unknown, the largest prying factor range in Table 18.5.12.2(a) through Table 18.5.12.2(j) for the concrete strength and designated angle category A through I shall be used.

Concrete is a building material that can exhibit great strength. However, under the cyclic motion of an earthquake it can crack. There are jurisdictions that have accepted performance goals for concrete in which some structural damage resulting from earthquake forces is tolerated, but the collapse of a building under any event is unacceptable. Therefore, the earthquake support for the sprinkler system, which is expected to operate under fire conditions even post-earthquake, has to consider a situation with cracked concrete.

The criteria found in ACI 355.2, *Qualification of Post-Installed Mechanical Anchors in Concrete and Commentary*, includes testing of the anchors under cracked concrete conditions where used in seismic applications. There is also a performance option provided, allowing for other products to be used when certified by a registered professional engineer.

18.5.12.7.3 The allowable maximum load shall be permitted to be calculated.

(A) Allowable concrete anchor loads shall be permitted to be determined using approved software that considers the effects of prying for concrete anchors.

(B) Anchors shall be seismically prequalified per 18.5.12.7.1.

(C) Allowable maximum loads shall be based on the anchor capacities given in approved evaluation service reports, where the calculation of ASD allowable shear and tension values are determined in accordance with Chapter 17 of ACI 318, *Building Code Requirements for Structural Concrete and Commentary*, and include the effects of prying, brace angle, and the over strength factor (Ω=2.0).

(D)* The shear and tension values determined in 18.5.12.7.3(C) using Chapter 17 of ACI 318, *Building Code Requirements for Structural Concrete and Commentary,* shall be multiplied by 0.43.

A.18.5.12.7.3(D) The values from ACI 318, Chapter 17 are strength (LRFD) values that must be divided by 1.4 in order to convert them to ASD values. The factor of 0.43 was created to simplify the steps needed to account for the strength capacities and the ASD method

EDUFIRE.IR

of calculation. The 0.43 is a rounded value determined by 1.2 (allowable stress increase) divided by the quantity of 2.0 times 1.4 [i.e., 0.4286 = 1.2/(2.0 × 1.4)].

18.5.12.7.4 Concrete anchors shall be acceptable for use where designed in accordance with the requirements of the building code and certified by a registered professional engineer.

In response to the new anchor evaluation process and the conservative generic load values shown in the tables within NFPA 13, anchor manufacturers could provide alternative load tables with greater usable values for their specific anchors. The values must be determined and certified by a registered professional engineer per 18.5.12.6.1. Commentary Table 18.1 provides an example of a certified alternative table that can be used as an acceptable alternative to the generic tables provided within NFPA 13.

N **18.5.12.7.5** Headed cast-in specialty inserts (concrete inserts) as prescribed in Table 18.5.12.2(a) through Table 18.5.12.2(j) shall be prequalified for seismic applications in accordance with ICC-ES AC446, *Acceptance Criteria for Headed Cast-in Specialty Inserts in Concrete*, and installed in accordance with the manufacturer's instructions.

Cast-in anchors can offer greater load capacities than post-installed anchors. Coordination early in the project is key because the anchor locations must be set before concrete is poured.

18.5.13 Braces to Buildings with Differential Movement. A length of pipe shall not be braced to sections of the building that will move differentially.

The requirement of 18.5.13 also applies to rigidly connected portions of systems, because they are susceptible to damage from differential movement. For example, in the 1994 Northridge, California, earthquake, fracture of a large threaded elbow took place near the intersection of a wall and the roof of a mercantile occupancy. One section of piping extending from the elbow was secured to the wall, and the other section was secured to the roof. Following the earthquake, a flexible fitting in the form of a roll-grooved elbow was used to repair the main, incorporating two flexible couplings to handle future differential movement.

18.6 Restraint of Branch Lines.

Restraint is considered a way of holding piping components in place, but to a lesser degree than by means of sway bracing. Restraint requirements were originally added to NFPA 13 based on the performance of sprinkler systems in the 1989 Loma Prieta, California, earthquake and were reinforced by the 1994 Northridge, California, earthquake. Those earthquakes demonstrated that strong vertical movement of unrestrained branch lines pulled sprinklers upward and then back down through the ceilings. Where lateral movement took place simultaneously, the operating mechanisms of flush-type sprinklers were susceptible to damage as the sprinklers broke through ceiling tiles. Ordinary gypsum board ceilings were found to shear concealed sprinklers where considerable lateral branch line movement took place.

Restraint is required for all branch lines that are not otherwise required to be laterally braced. Table 18.6.4(a) and Table 18.6.4(b) provide the specifications for maximum spacing intervals based on the pipe size, pipe material, and the expected acceleration forces (represented by C_p) as determined in accordance with Table 18.5.9.3. The allowable spacing between restraints is reduced as the pipe gets smaller (less rigid) and as the ground accelerations increase. Exhibit 18.8 shows restraint of a branch line using a wraparound U-hook. It should be noted that the legs of the U-hook must be bent at a minimum of 30 degrees from vertical.

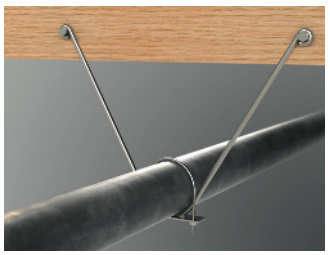

EXHIBIT 18.8 *Restraint of Branch Line with Wraparound U-Hook. (Courtesy of TOLCO)*

18.6.1* Restraint is considered a lesser degree of resisting loads than bracing and shall be provided by use of one of the following:

(1) Listed sway brace assembly
(2) Wraparound U-hook satisfying the requirements of 18.5.5.11
(3) No. 12, 440 lb (200 kg) wire installed at least 45 degrees from the vertical plane and anchored on both sides of the pipe

EDUFIRE.IR

(4) CPVC hangers listed to provide restraint

(5)* Hanger not less than 45 degrees from vertical installed within 6 in. (150 mm) of the vertical hanger arranged for restraint against upward movement, provided it is utilized such that *l/r* does not exceed 400, where the rod extends to the pipe or a surge clip has been installed

(6) Other approved means

A.18.6.1(5) See Figure A.18.6.1(5)(a) and Figure A.18.6.1(5)(b). When hangers are installed on both sides of the pipe, the *l/r* is not restricted.

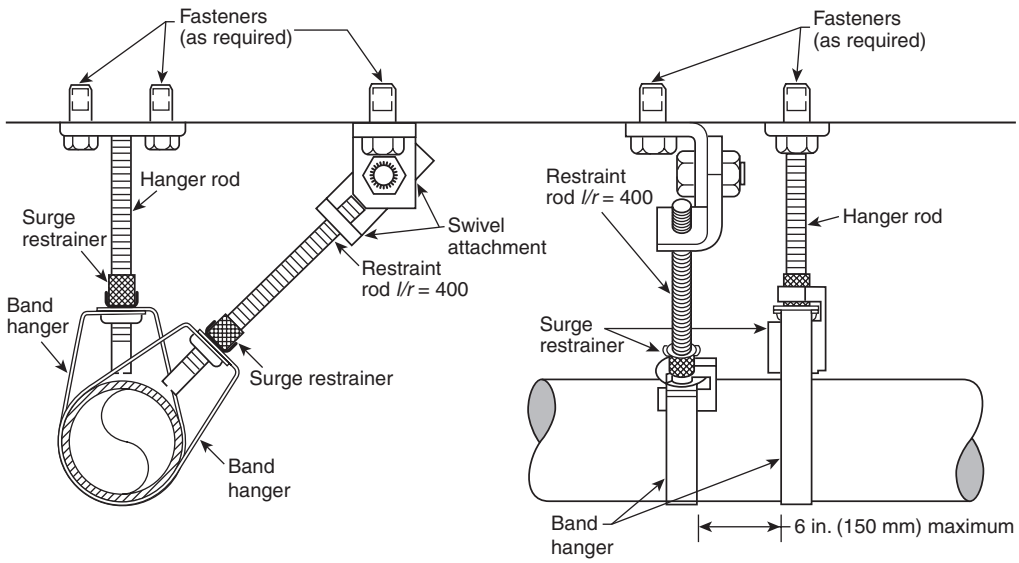

FIGURE A.18.6.1(5)(a) *Hangers, with Surge Clips, Used in Combination for Restraint of Branch Lines.*

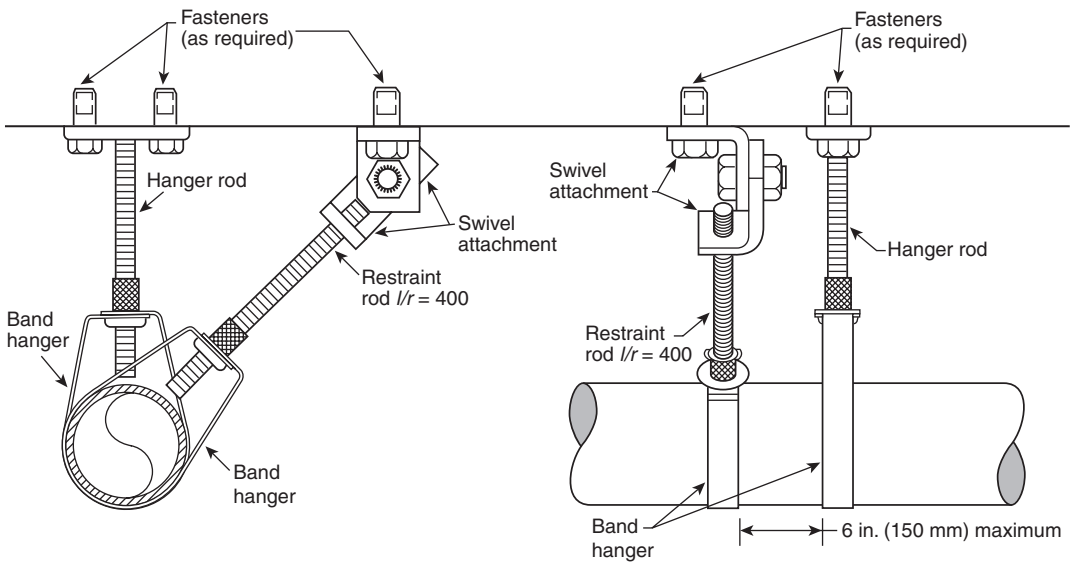

FIGURE A.18.6.1(5)(b) *Hangers, with Threaded Rod Extended to Pipe, Used in Combination for Restraint of Branch Lines.*

EDUFIRE.IR

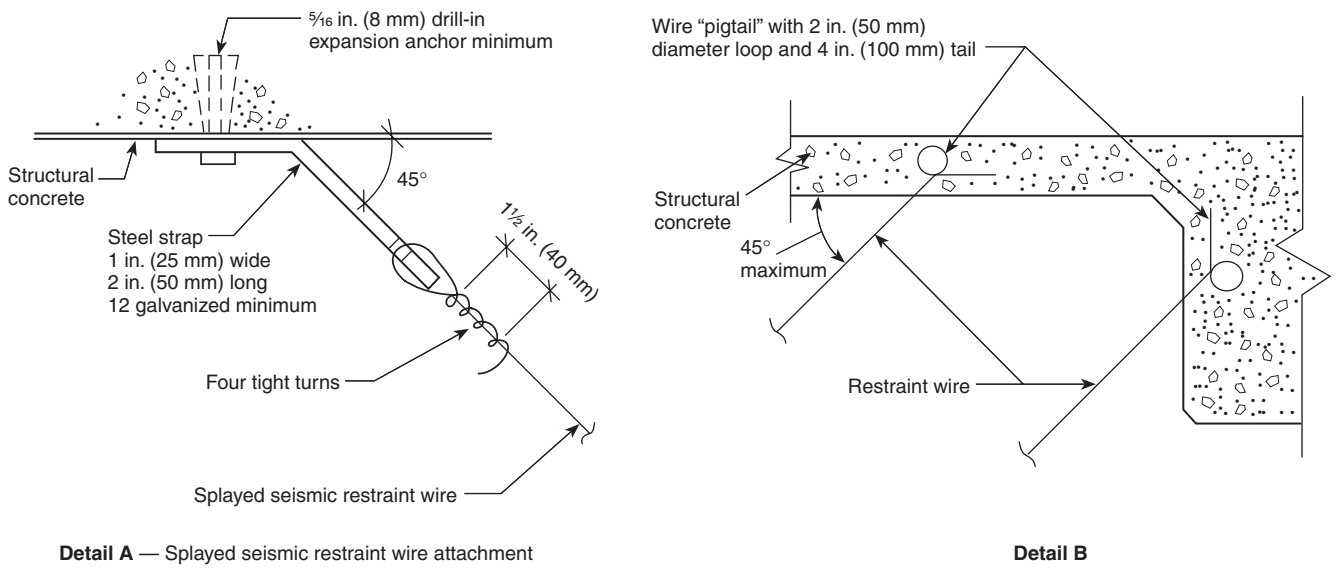

FIGURE A.18.6.1(a) *Wire Attachment to Cast-in-Place Concrete.*

A.18.6.1 Wires used for piping restraints should be attached to the branch line with two tight turns around the pipe and fastened with four tight turns within 1½ in. (38 mm) and should be attached to the structure in accordance with the details shown in Figure A.18.6.1(a) through Figure A.18.6.1(d) or other approved method.

Restraint for branch lines must be in the lateral as well as the vertical direction. For vertical restraint, inserting a simple clip into a hanger ring or screwing the rod all the way down to the top of the pipe can be used to provide restraint to meet the requirements of 17.4.3.4.4 and 17.4.3.5.2. The necessary restraint can also be provided by additional hangers brought at an angle, wraparound U-hooks with legs bent at 30 degrees from vertical, lateral earthquake braces, or the wire-restraint method detailed in A.18.6.1.

Where additional hangers are used at an angle for branch line restraint, the maximum *l*/*r* is 400. However, there is no limitation on the length of the rod used in the hanger assemblies if they are installed on both sides of the line. In other words, each assembly is only expected to act in tension.

Chlorinated polyvinyl chloride (CPVC) hangers that use two points of attachment were added to the list of acceptable restraints in the 2013 edition. This type of support works similarly to the wraparound U-hook, but instead of looping around the pipe it is tight to the structure so that the structure provides the vertical restraint for the pipe.

18.6.2 Wire Restraint.

18.6.2.1 Wire used for restraint shall be located within 2 ft (600 mm) of a hanger.

18.6.2.2 The hanger closest to a wire restraint shall be of a type that resists upward movement of a branch line.

The entire hanger assembly must resist upward movement.

18.6.3 The end sprinkler on a branch line shall be restrained.

N **18.6.3.1** The location of the restraint from end of the line shall not be greater than 36 in. (900 mm) for 1 in. (25 mm) pipe, 48 in. (1200 mm) for 1¼ in. (32 mm) pipe, and 60 in. (1.5 m) for 1½ in. (40 mm) or larger pipe.

18.6.4* Branch lines shall be laterally restrained at intervals not exceeding those specified in Table 18.6.4(a) or Table 18.6.4(b) based on branch line diameter and the value of C_p.

FAQ [18.6.3]

Why does 18.6.3 require the end sprinkler on a line to be restrained?

The end of the pipe is likely to be whipped around unless it is restrained with the use of a wraparound U-hook with legs at 30 degrees from vertical or other type of hanger or restraint assembly meeting the requirements of 18.6.1.

EDUFIRE.IR

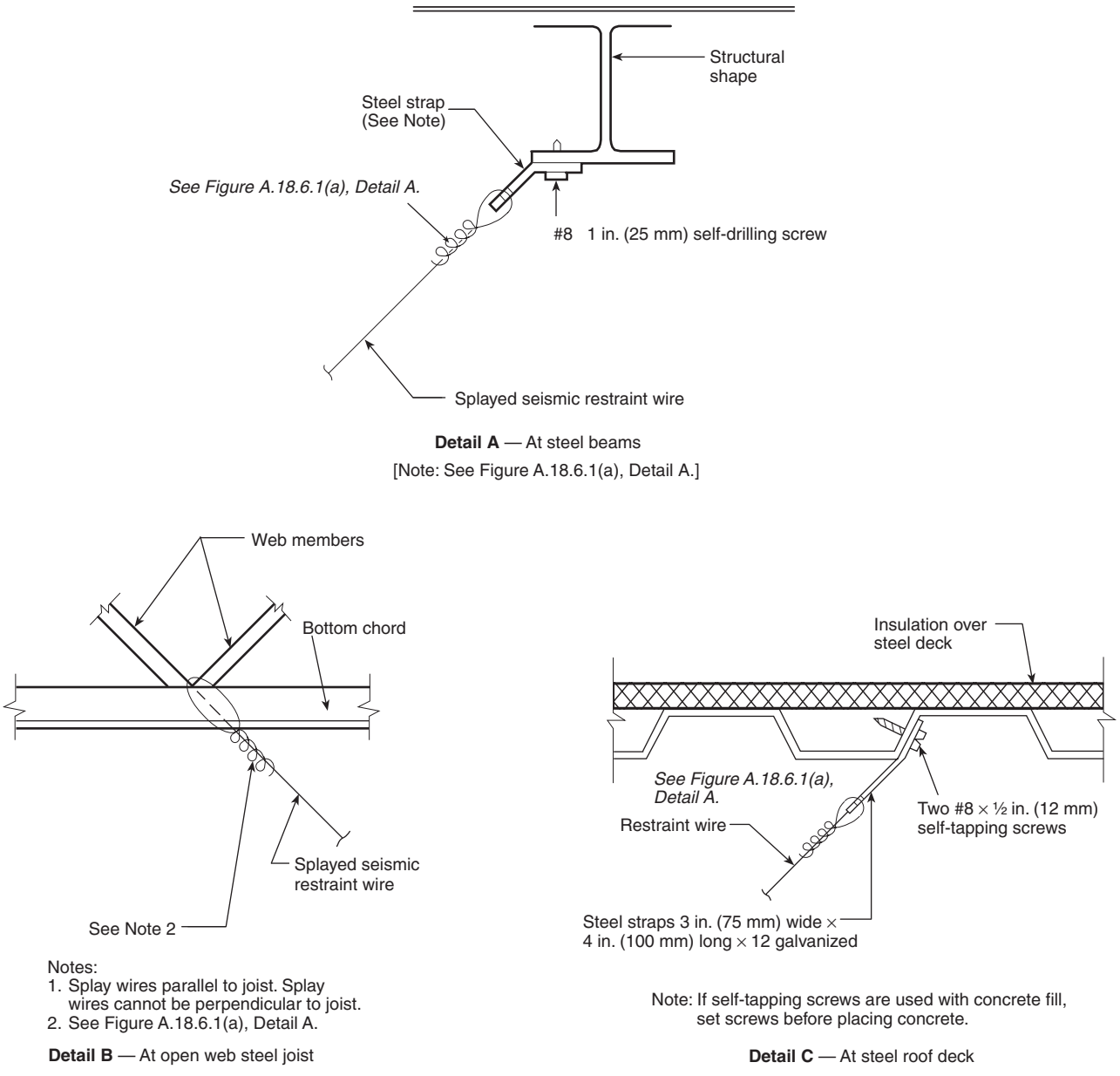

FIGURE A.18.6.1(b) *Acceptable Details — Wire Connections to Steel Framing.*

TABLE 18.6.4(a) *Maximum Spacing [ft (m)] of Steel Pipe Restraints*

Pipe [in. (mm)]	***Seismic Coefficient, C_p***			
	$C_p \le 0.50$	$0.5 < C_p \le 0.71$	$0.71 < C_p \le 1.40$	$C_p > 1.40$
½ (15)	34 (10.3)	29 (8.8)	20 (6.1)	18 (5.5)
¾ (20)	38 (11.6)	32 (9.7)	23 (7.0)	20 (6.1)
1 (25)	43 (13.1)	36 (11.0)	26 (7.9)	22 (6.7)
1¼ (32)	46 (14.0)	39 (11.9)	27 (8.2)	24 (7.3)
1½ (40)	49 (14.9)	41 (12.5)	29 (8.8)	25 (7.6)
2 (50)	53 (16.1)	45 (13.7)	31 (9.4)	27 (8.2)

EDUFIRE.IR

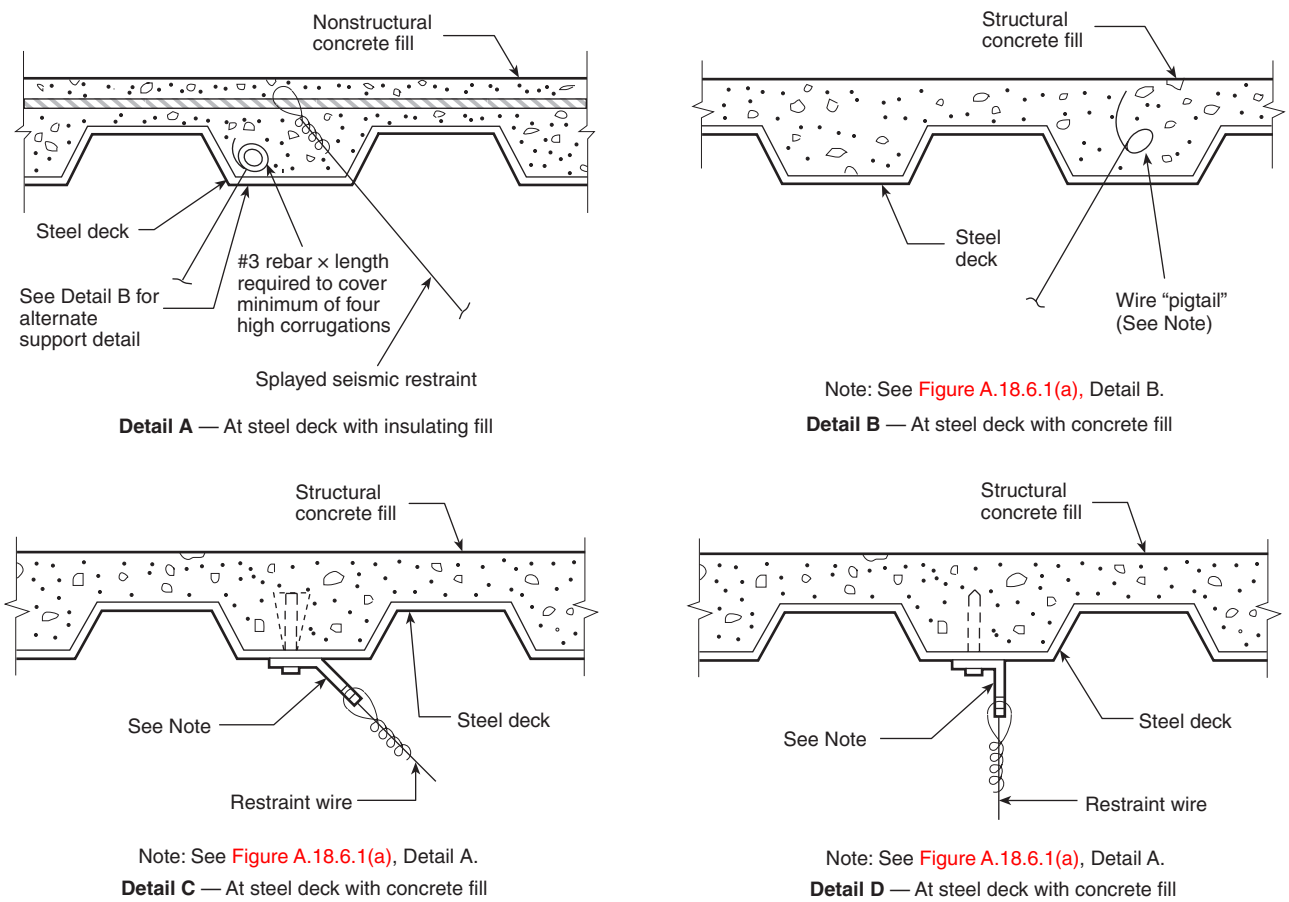

Detail A — At steel deck with insulating fill

Note: See Figure A.18.6.1(a), Detail B.

Detail B — At steel deck with concrete fill

Note: See Figure A.18.6.1(a), Detail A.

Detail C — At steel deck with concrete fill

Note: See Figure A.18.6.1(a), Detail A.

Detail D — At steel deck with concrete fill

For SI units, 1 in. = 25.4 mm.
Note: If self-tapping screws are used with concrete fill, set screws before placing concrete.

FIGURE A.18.6.1(c) *Acceptable Details — Wire Connections to Steel Decking with Fill.*

TABLE 18.6.4(b) *Maximum Spacing [ft (m)] of CPVC, Copper, and Red Brass Pipe Restraints*

Pipe [in. (mm)]	*Seismic Coefficient, C_p*			
	$C_p \le 0.50$	$0.5 < C_p \le 0.71$	$0.71 < C_p \le 1.40$	$C_p > 1.40$
½ (15)	26 (7.9)	22 (6.7)	16 (4.9)	13 (4.0)
¾ (20)	31 (9.4)	26 (7.9)	18 (5.5)	15 (4.6)
1 (25)	34 (10.3)	28 (8.5)	20 (6.1)	17 (5.2)
1¼ (32)	37 (11.3)	31 (9.4)	22 (6.7)	19 (5.8)
1½ (40)	40 (12.2)	34 (10.3)	24 (7.3)	20 (6.1)
2 (50)	45 (13.7)	38 (11.6)	27 (8.2)	23 (7.0)

Restraint is required for all branch lines at maximum spacing ranging from 18 ft (5.5 m) to 53 ft (16.2 m), depending on the size of pipe and the seismic coefficient, C_p, determined in accordance with 18.5.9.3. The higher the expected short-period ground acceleration and the smaller the pipe, the closer the spacing for the branch line restraint. An exception is provided by 18.6.5 for branch lines suspended by rods not more than 6 in. (150 mm) in length.

The allowance for accessory piping to omit restraint is subjective. If damage to accessory piping could impact the system piping, accessory piping should be protected.

EDUFIRE.IR

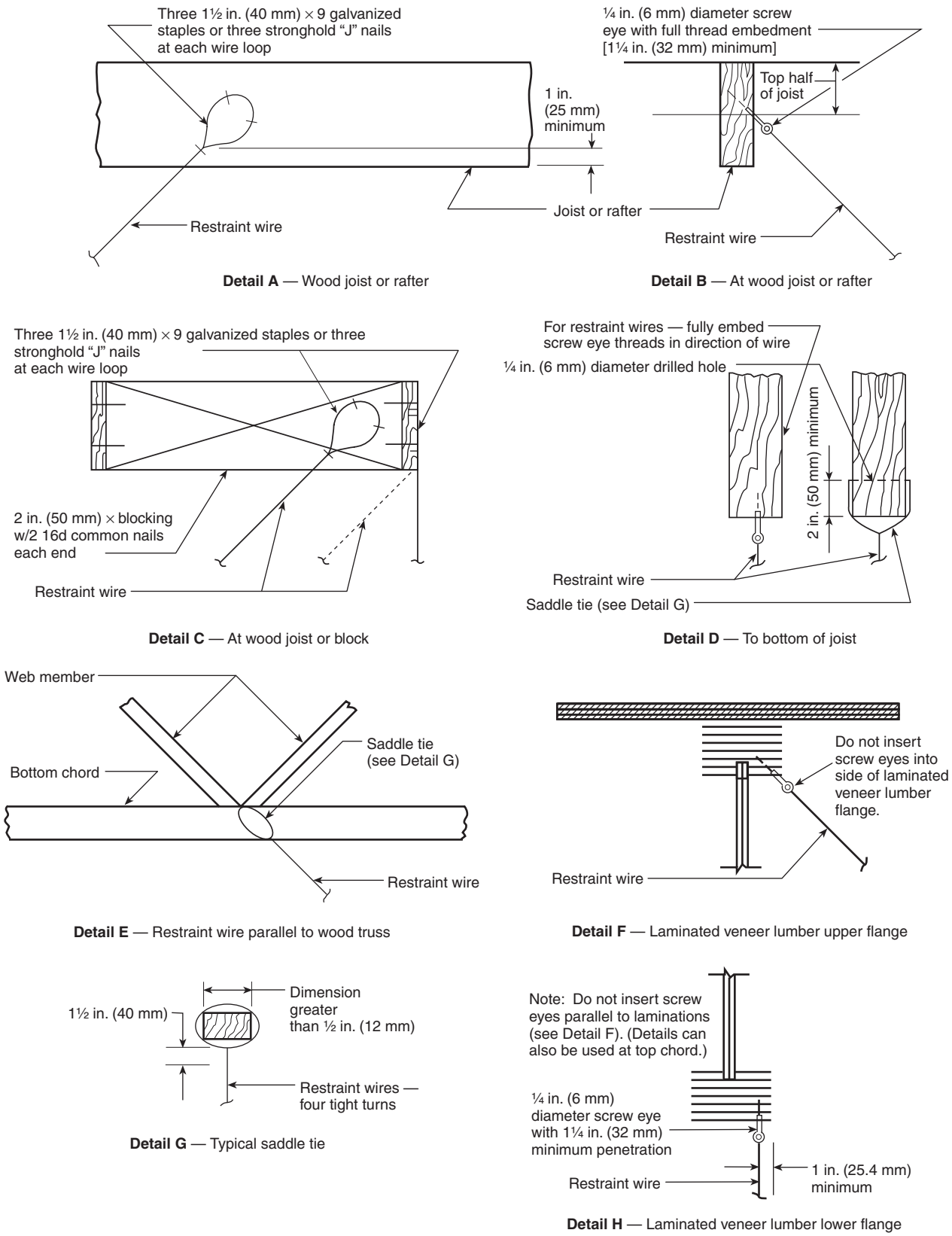

FIGURE A.18.6.1(d) *Acceptable Details — Wire Connections to Wood Framing.*

EDUFIRE.IR

A.18.6.4 Modern seismic codes require branch lines to be restrained, both to limit interaction of the pipe with other portions of the structure and to limit stresses in the pipes to permissible limits. The maximum spacing between restraints is dependent on the seismic coefficient, C_p, as shown in Table 18.6.4(a). Table 18.6.4(a) has been limited to 2 in. (50 mm) lines and smaller, because branch lines 2½ in. (65 mm) or larger are required to be seismically braced.

It is not the intent of this section to require restraint of piping associated with valve trim, water motor gong piping, air or nitrogen supply piping, or other piping that is not essential to the operation of the sprinkler system. Essential piping such as fire pump sensing lines and diesel fuel lines are some examples of small piping that should be restrained.

18.6.5 Where the branch lines are supported by rods less than 6 in. (150 mm) long measured between the top of the pipe and the point of attachment to the building structure, the requirements of 18.6.1 through 18.6.4 shall not apply and additional restraint shall not be required for the branch lines.

18.6.6* Sprigs 4 ft (1.2 m) or longer shall be restrained against lateral movement.

A sprig is considered the opposite of a pipe drop. A sprig is a pipe rising from the branch line to serve an individual upright sprinkler, as defined in 3.3.204. Sprigs are susceptible to rotation during relatively minor seismic events. The restraint provisions of 18.6.6 do not apply to drops to individual sprinklers, because gravity acts to pull them back to center.

The requirement for restraint of sprigs was originally instituted for sprigs more than 8 ft (2.4 m) in length but was changed in the 1996 edition of NFPA 13 to apply to sprigs exceeding 4 ft (1.2 m) in length. The change was based on observations of rotated sprigs following the 1994 Northridge, California, earthquake. The additional stability gained from this requirement results in time and money saved, because sprigs do not have to be manually repositioned after each event.

A.18.6.6 Such restraint can be provided by using the restraining wire discussed in 18.6.1. For the purposes of determining the need for restraint, the length of the sprig is determined by measuring the length of the exposed pipe and does not include the fittings and sprinkler.

18.6.7 Drops and armovers shall not require restraint.

Restraint provides additional support for branch lines. This is a clarification that restraint is not required for a drop or armover feeding a single sprinkler. However, if there is a single sprinkler drop that could be damaged from earthquake motion, especially from impact with other building or nonstructural components, restraint should be used.

18.7 Hangers and Fasteners Subject to Earthquakes.

18.7.1 Where seismic protection is provided, C-type clamps (including beam and large flange clamps) used to attach hangers to the building structure shall be equipped with a restraining strap unless the provisions of 18.7.1.1 are satisfied.

Beginning with the 1996 edition of NFPA 13, restraining straps were required on all C-type clamps used for system hangers in earthquake-prone areas exemplified in Exhibit 18.9. Previously, NFPA 13 permitted any other means the authority having jurisdiction determined acceptable to prevent C-type clamps from sliding off beam flanges during earthquake movement. Detachment of a C-type clamp is a concern with the cyclic motion from this type of event. Specific criteria for the restraining strap are provided in 18.7.2. Exhibit 18.9 and Exhibit 18.10 illustrate the use of C-clamps with restraining straps.

EDUFIRE.IR

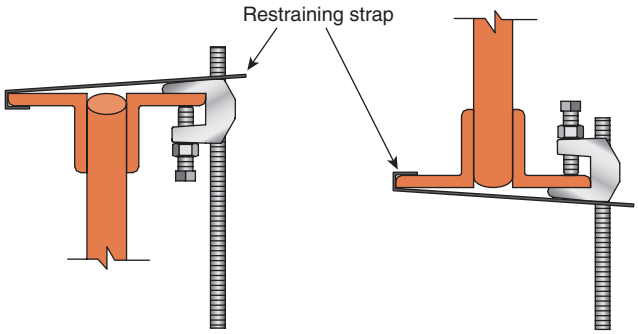

EXHIBIT 18.9 Retainer Straps on Typical Upper Hanger Assemblies Consisting of Universal Beam Clamp and All-Thread Rod. (Based on artwork provided by AFCON)

EXHIBIT 18.10 C-Clamp with Restraining Strap.

18.7.1.1 As an alternative to the installation of a required restraining strap, a device investigated and specifically listed to restrain the clamp to the structure is permitted where the intent of the device is to resist the worst-case expected horizontal load.

18.7.2 The restraining strap shall be listed for use with a C-type clamp or shall be a steel strap of not less than 16 gauge (1.57 mm) thickness and not less than 1 in. (25 mm) wide for pipe diameters 8 in. (200 mm) or less and 14 gauge (1.98 mm) thickness and not less than 1¼ in. (32 mm) wide for pipe diameters greater than 8 in. (200 mm).

18.7.3 The restraining strap shall wrap around the beam flange not less than 1 in. (25 mm).

18.7.4 A lock nut on a C-type clamp shall not be used as a method of restraint.

18.7.5 A lip on a "C" or "Z" purlin shall not be used as a method of restraint.

18.7.6 Where purlins or beams do not provide a secure lip to a restraining strap, the strap shall be through-bolted or secured by a self-tapping screw.

18.7.7 In areas where the horizontal force factor exceeds 0.50 W_p, powder-driven studs shall be permitted to attach hangers to the building structure where they are specifically listed for use in areas subject to earthquakes.

Powder-driven fasteners are prohibited by 18.7.7 as a means of attaching system hangers in strong motion earthquake areas, which are defined as those areas in which the seismic coefficient, C_p, is in excess of 0.50, unless the fasteners have been specifically investigated and listed for such loads. At the time of publication of the 2019 edition of NFPA 13, no such listings were known to be available.

18.7.8* Where seismic protection is provided, concrete anchors used to secure hangers to the building structure shall be in accordance with ACI 355.2, *Qualification of Post-Installed Mechanical Anchors in Concrete and Commentary*, and installed in accordance with manufacturer's instructions.

A.18.7.8 Concrete anchors included in current Evaluation Service Reports conforming to the requirements of acceptance criteria AC193 or AC308 as issued by ICC Evaluation Service, Inc.

EDUFIRE.IR

should be considered to meet ACI 355.2, *Qualification of Post-Installed Mechanical Anchors in Concrete & Commentary*.

Hangers that are installed in earthquake-prone areas must use prequalified concrete anchors when attached to concrete structures. This is the same qualification as that used for fasteners for braces in 18.5.12.7.

N **18.7.9** Where seismic protection is provided, cast-in-place anchors used to secure hangers to the building structure shall be in accordance with ICC-ES AC446, *Acceptance Criteria for Headed Cast-in Specialty Inserts in Concrete,* and installed in accordance with manufacturer's instructions.

18.8* Pipe Stands Subject to Earthquakes.

A.18.8 When using a pipestand to support the gravity load of a water-based fire protection system in an earthquake area, care should be taken in planning the seismic protection. This includes close attention to the differential movement between the system and the building or other components.

18.8.1 In areas where the horizontal force factor exceeds 0.5 W_p, pipe stands over 4 ft (1.2 m) in height shall be certified by a registered professional engineer to be adequate for the seismic forces.

Earthquake motion can have a significant effect on systems supported by pipe stands. Therefore, it is required that a registered professional engineer design the pipe stands to have the appropriate load capacity for supporting the system and resisting the anticipated seismic motion. Details such as the environment that the system and pipe stands are exposed to, the proximity to other systems and equipment, or even the hazard being protected should be considered in the design.

18.8.2 Where seismic protection is provided, concrete anchors used to secure pipe stands to their bases shall be in accordance with ACI 355.2, *Qualification of Post-Installed Mechanical Anchors in Concrete and Commentary*, and shall be installed in accordance with manufacturer's instructions.

References Cited in Commentary

National Fire Protection Association, 1 Batterymarch Park, Quincy, MA 02169-7471.
NFPA 5000®, Building Construction and Safety Code®, 2012, 2015, and 2018 editions.

American Concrete Institute, 38800 Country Club Drive, Farmington Hills, MI 48331.
ACI 355.2, *Qualification of Post-Installed Mechanical Anchors in Concrete and Commentary,* 2007 edition.

American Society of Civil Engineers, 1801 Alexander Bell Drive, Reston, VA 20191-4400.
SEI/ASCE 7, *Minimum Design Loads for Buildings and Other Structures,* 2002, 2005, 2010.

ASTM International, 100 Barr Harbor Drive, P.O. Box C700, West Conshohocken, PA 19428-2959.
ASTM E814, *Test Methods for Fire Tests of Through-Penetration Firestop Systems*, 2011.

Building Seismic Safety Council, National Institute of Building Sciences, 1090 Vermont Avenue NW, Suite 700, Washington, DC 20005.
"Recommended Provisions for Seismic Regulations for New Buildings and Other Structures," 2009.

International Code Council, 500 New Jersey Avenue, NW, 6th Floor, Washington, DC 20001.
ESR 2502, "ICC-ES Evaluation Report: Power-Stud® + *SD2 Carbon Steel Anchors, Power-Stud® + SD4 Stainless Steel Anchors and Power-Stud® + SD6 Stainless Steel Anchors in Cracked and Uncracked Concrete," May 2018.*
International Building Code, 2012, 2015, and 2018.

EDUFIRE.IR

EDUFIRE.IR

CHAPTER

19

Design Approaches

REORGANIZATION NOTE

This new chapter comprises Chapters 11 and 23, part of Chapter 4, and a small section from Chapter 8 of the 2016 edition. There are very few technical or editorial changes other than section renumbering and updating references to other new chapters and sections. Plan requirements have been moved to the new Chapter 27, Plans and Calculations; exposure protection to the new Chapter 8, System Types and Requirements; and the owner's certificate to Chapter 4, General Requirements.

Chapter 19 provides the minimum requirements for sprinkler system discharge criteria for occupancy hazard approaches to effectively control or suppress a fire. The design discharge requirements for the protection of storage occupancies, including requirements for miscellaneous storage, Class I through Class IV commodities, Group A plastics, tire storage, rolled paper storage, and special designs for storage protection, can be found in Chapters 20 through Chapter 25.

Chapter 19 recognizes occupancy hazards in combination with the density/area method as the traditional, more common design approach to determining waterflow and pressure demand for sprinkler systems (see Section 19.2). In addition, special design approaches for residential sprinklers, exposure protection, water curtains, and sprinkler-protected glazing can be found in Section 19.4.

Section 19.2 provides the common minimum requirements on all hydraulically calculated systems, including storage facilities, and these requirements apply to all density/area design methods. Section 19.3 provides fire protection guidance for the occupancy hazard classification–based protection, which is traditionally the most widely applied approach. The requirements for special design approaches are located in Section 19.4 to clearly indicate that they are not part of the occupancy hazard approach.

19.1 General.

Chapter 19 shall be utilized for design approaches.

19.2 General Design Approaches.

The requirements of Section 19.2 shall apply to all sprinkler systems unless modified by a specific section of Chapter 19 or Chapter 20.

19.2.1 A building or portion thereof shall be permitted to be protected in accordance with any applicable design approach at the discretion of the designer.

The intent of this requirement is to explain that it is applicable to all design approaches and not just the occupancy hazard approach. By identifying that a "portion thereof" can be protected by any applicable design approach, 19.2.1 allows other portions within the same area to be protected by a different applicable option. Although less common for systems protecting storage, different design approaches can be

EDUFIRE.IR

applied, provided that the requirements of 19.2.2 are followed. It is also intended to define the role of the system designer versus the role of the authority having jurisdiction or the plan reviewer in the process of providing an adequate sprinkler system for a building or for areas being protected.

19.2.2* Adjacent Hazards or Design Methods.

For buildings with two or more adjacent hazards or design methods, the following shall apply:

(1) Where areas are not physically separated by a draft curtain, barrier, or partition capable of delaying heat from a fire in one area from fusing sprinklers in the adjacent area, the required sprinkler protection for the more demanding design basis shall extend 15 ft (4.6 m) beyond its perimeter.

(2) The requirements of 19.2.2(1) shall not apply where the areas are separated by a draft curtain, or barrier located above an aisle, where the aisle has a minimum 2 ft (600 mm) horizontal separation from the adjacent hazard on each side, or a partition that is capable of delaying heat from a fire in one area from fusing sprinklers in the adjacent area.

(3) The requirements of 19.2.2(1) shall not apply to the extension of more demanding criteria from an upper ceiling level to beneath a lower ceiling level where the difference in height between the ceiling levels is at least 2 ft (600 mm), located above an aisle, where the aisle has a minimum 2 ft (600 mm) horizontal separation from the adjacent hazard on each side.

It is not unusual for buildings to have various fire hazards within them resulting in different occupancy or commodity classifications. Because the discharge criteria for all fire hazards are not the same, 19.2.2 is intended to ensure that all fire hazards are adequately protected. In some instances, it is normal for sprinklers not directly above the fire to operate, providing an overlapping discharge of water. To provide adequate protection, adjacent sprinklers must comply with the spacing and discharge dictated by the greater demand. See Exhibits 19.1 and 19.2.

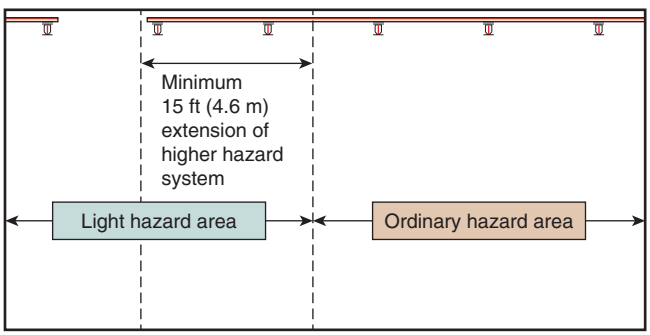

EXHIBIT 19.1 Minimum 15 ft (4.6 m) Extension of Higher Hazard System.

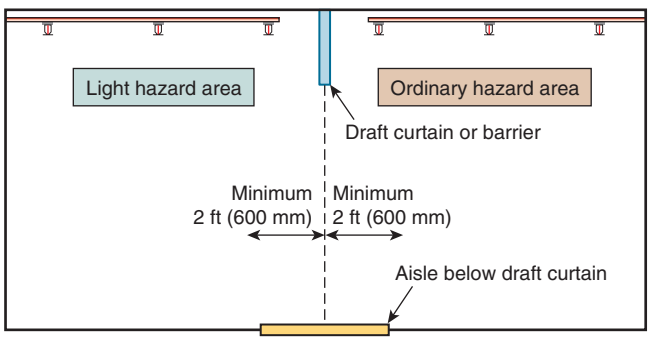

EXHIBIT 19.2 Draft Curtain with Aisle.

A.19.2.2 The situation frequently arises where a small area of a higher hazard is surrounded by a lesser hazard. For example, consider a 600 ft^2 (56 m^2) area consisting of 10 ft (3 m) high on-floor storage of cartoned nonexpanded plastic commodities surrounded by a plastic extruding operation in a 15 ft (4.6 m) high building. In accordance with Chapter 20, the density required for the plastic storage must meet the requirements for extra hazard (Group 1) occupancies. The plastic extruding operation should be considered an ordinary hazard (Group 2) occupancy. In accordance with Chapter 19, the corresponding discharge densities should be 0.3 gpm/ft^2 (12.2 mm/min) over 2500 ft^2 (230 m^2) for the storage and 0.2 gpm/ft^2 (8.1 mm/min) over 1500 ft^2 (140 m^2) for the remainder of the area. *(Also see Chapter 19 for the required minimum areas of operation.)*

EDUFIRE.IR

If the storage area is not separated from the surrounding area by a wall or partition *(see 19.2.2)*, the size of the operating area is determined by the higher hazard storage.

For example, the operating area is 2500 ft² (230 m²). The system must be able to provide the 0.3 gpm/ft² (12.2 mm/min) density over the storage area and 15 ft (4.6 m) beyond. If part of the remote area is outside the 600 ft² (56 m²) plus the 15 ft (4.6 m) overlap, only 0.2 gpm/ft² (8.1 mm/min) is needed for that portion.

If the storage is separated from the surrounding area by a floor-to-ceiling/roof partition that is capable of preventing heat from a fire on one side from fusing sprinklers on the other side, the size of the operating area is determined by the occupancy of the surrounding area. In this example, the design area is 1500 ft² (140 m²). A 0.3 gpm/ft² (12.2 mm/min) density is needed within the separated area with 0.2 gpm/ft² (8.1 mm/min) in the remainder of the remote area.

When the small higher hazard area is larger than the required minimum area dictated by the surrounding occupancy, even when separated by partitions capable of stopping heat, the size of the operating area is determined by the higher hazard storage.

The information in A.19.2.2 provides additional guidance where an area of higher hazard is smaller than its minimum allowed remote area but larger than the area required for the lower hazard classification surrounding it. A literal application of the initial example would allow an enclosed 1800 ft² (167 m²) extra hazard (Group 1) occupancy, which typically would have a minimum assigned area of 2500 ft² (232 m²) where surrounded by an ordinary hazard (Group 2) occupancy, to have a minimum-sized remote area of 1500 ft² (139 m²). It could be even smaller if the area reduction modifier is applicable to the surrounding area. This guidance ensures that the remote area will be at least as large as the enclosed area, up to the otherwise required size of the remote area for the higher hazard. See Exhibit 19.3.

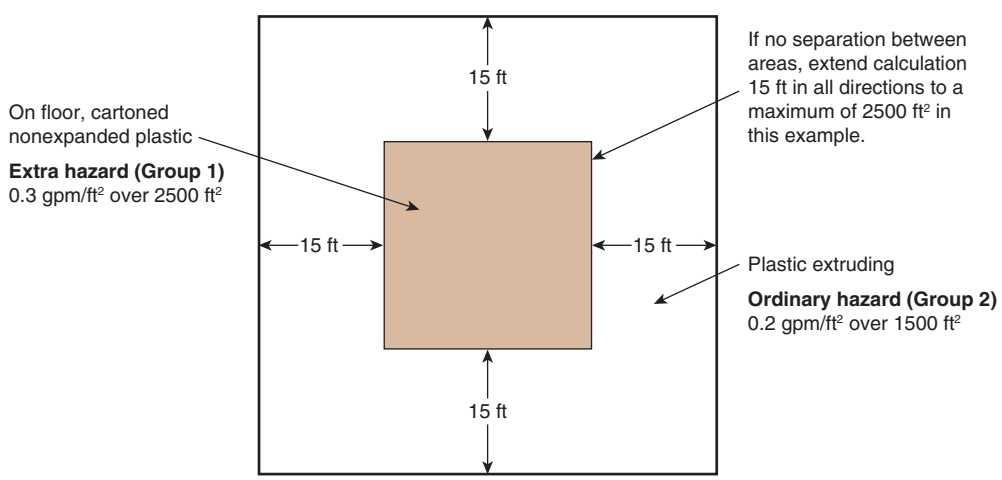

EXHIBIT 19.3 *Adjacent Hazard Example.*

19.2.3 For hydraulically calculated systems, the total system water supply requirements for each design basis shall be determined in accordance with the procedures of Section 27.2 unless modified by a section of Chapter 19 or Chapter 20.

19.2.4 Water Demand.

19.2.4.1* The water demand requirements shall be determined from the following:

(1) Occupancy hazard fire control approach and special design approaches of Chapter 19
(2) Storage design approaches of Chapter 20 through Chapter 25
(3) Special occupancy approaches of Chapter 26

EDUFIRE.IR

A.19.2.4.1 See A.4.2.

19.2.4.2* The minimum water demand requirements for a sprinkler system shall be determined by adding the hose stream allowance to the water demand for sprinklers.

A.19.2.4.2 Appropriate area/density, other design criteria, and water supply requirements should be based on scientifically based engineering analyses that can include submitted fire testing, calculations, or results from appropriate computational models.

Recommended water supplies anticipate successful sprinkler operation. Because of the small but still significant number of uncontrolled fires in sprinklered properties, which have various causes, there should be an adequate water supply available for fire department use.

The hose stream demand required by this standard is intended to provide the fire department with the extra flow they need to conduct mop-up operations and final extinguishment of a fire at a sprinklered property. This is not the fire department manual fire flow, which is determined by other codes or standards. However, it is not the intent of this standard to require that the sprinkler demand be added to the manual fire flow demand required by other codes and standards. While the other codes and standards can factor in the presence of a sprinkler system in the determination of the manual fire flow requirement, the sprinkler system water demand and manual fire flow demand are intended to be separate stand-alone calculations. NFPA 1 emphasizes this fact by the statement in A.18.4.1 that "It is not the intent to add the minimum fire protection water supplies, such as for a sprinkler system, to the minimum fire flow for manual fire suppression purposes required by this section."

19.2.5 Water Supplies.

19.2.5.1 The minimum water supply shall be available for the minimum duration specified in Chapter 19.

19.2.5.2* Tanks shall be sized to supply the equipment that they serve.

The usable capacity of a water tank is based on the sprinkler system demand multiplied by the required system discharge duration as specified in Tables 19.3.2.1 and 19.3.3.1.2 plus hose demand if required (see commentary following A.19.2.5.2). The tanks' usable capacity is measured between the inlet of the overflow and the level of the vortex plate inside the tank.

A.19.2.5.2 Where tanks serve sprinklers only, they can be sized to provide the duration required for the sprinkler system, ignoring any hose stream demands. Where tanks serve some combination of sprinklers, inside hose stations, outside hose stations, or domestic/process use, the tank needs to be capable of providing the duration for the equipment that is fed from the tank, but the demands of equipment not connected to the tank can be ignored. Where a tank is used for both domestic/process water and fire protection, the entire duration demand of the domestic/process water does not need to be included in the tank if provisions are made to segregate the tank so that adequate fire protection water is always present or if provisions are made to automatically cut off the simultaneous use in the event of fire.

It is not the intent of NFPA 13 to require the addition of inside or outside hose demands where systems are supplied by a tank, unless the sprinkler system specifically supplies hose connections inside the building. Under all circumstances, outside hose is not included in determining the size and capacity of a tank.

When tanks serve both domestic and fire protection demands, the tank must be arranged so that fire protection water is always available regardless of domestic demand. Exhibit 19.4 is one example of such an arrangement.

19.2.5.3* Pumps shall be sized to supply the equipment that they serve.

A.19.2.5.3 Where pumps serve sprinklers only, they can be sized to provide the flow required for the sprinkler system, ignoring any hose stream demands. Where pumps serve some combination of sprinklers, inside hose stations, or outside hose stations, the pump needs to be capable of providing the flow for the equipment that is fed from the pump, but the demands

EDUFIRE.IR

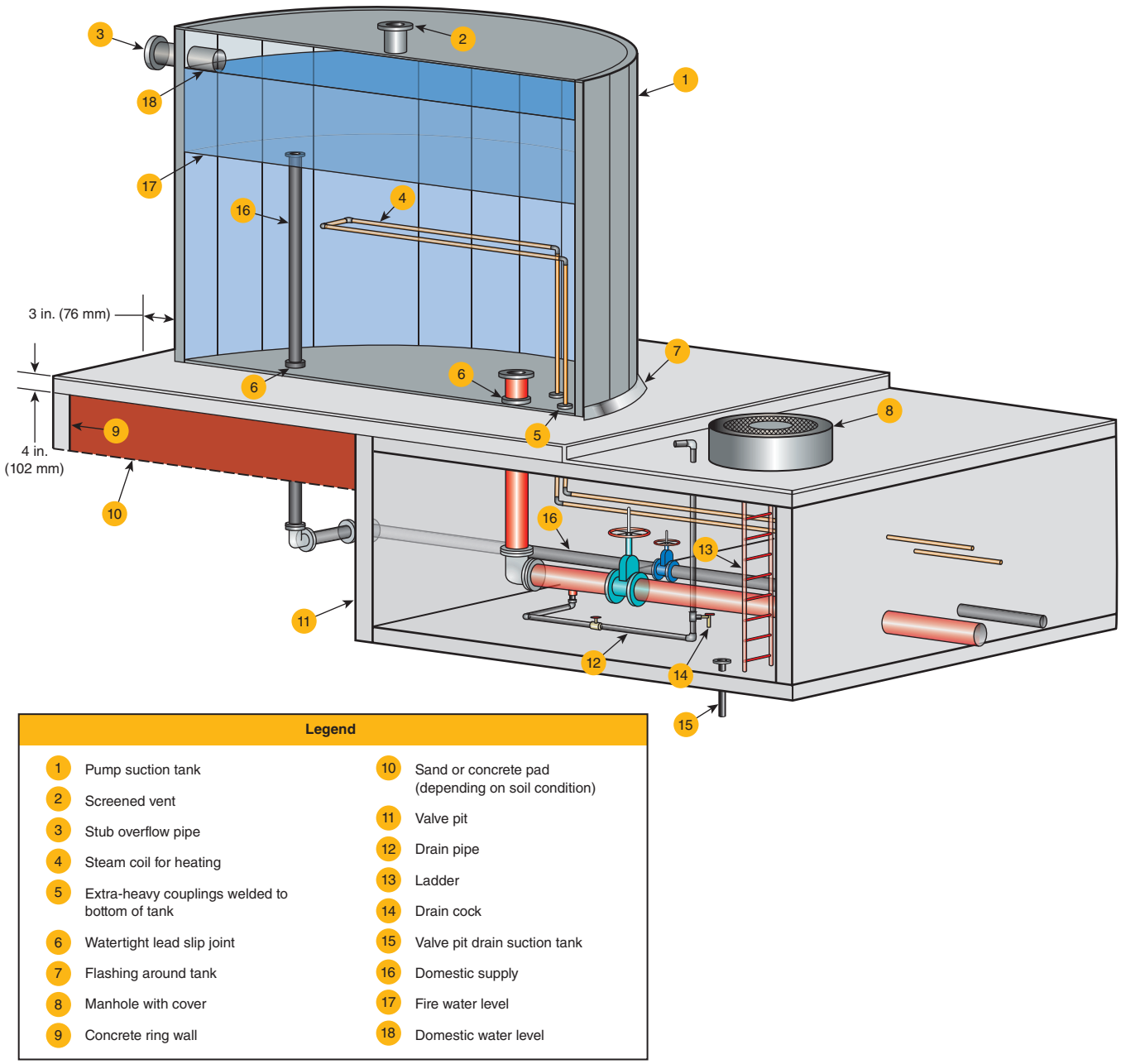

EXHIBIT 19.4 *Dual-Purpose Water Storage Tank. (Courtesy of Stephan Laforest)*

of equipment not connected to the pump can be ignored except for evaluating their impact on the available water supply to the pump.

Where pumps supply sprinklers only, the hose stream requirements need not be added in assigning the volume of water provided by the pump. For example, if the pump supplies a system that is required to be equipped with small hose stations, the demand of the hose stations needs to be included in sizing the pump. Prior to the 2013 edition, the provisions for hose allowance were written so that a pump that serves inside hose stations (not outside hydrants) could be interpreted as having to be sized, including outside hose demand. A pump taking suction from a tank that does not serve hydrants does not have to be sized for outside hose demand.

EDUFIRE.IR

Although pumps do not have to be sized to meet the flow required by exterior upstream hose demands, the volume and pressure produced by the pump are affected by those demands where provided by the same water supply. Where the water supply for the pump also provides the hose demand, it still must be evaluated to ensure that the combined flow is available from the supply. Additionally, the pressure produced by the pump is a combination of the pump inlet pressure from the water supply and the pressure from the pump itself. Since the combined flow reduces the available pressure to the pump, it increases the pressure that must be provided by the pump.

19.2.6 Hose Allowance.

19.2.6.1 Systems with Multiple Hazard Classifications.
For systems with multiple hazard classifications, the hose stream allowance and water supply duration shall be in accordance with one of the following:

(1) The water supply requirements for the highest hazard classification within the system shall be used.
(2) The water supply requirements for each individual hazard classification shall be used in the calculations for the design area for that hazard.
(3)* For systems with multiple hazard classifications where the higher classification only lies within single rooms less than or equal to 400 ft^2 (37 m^2) in area with no such rooms adjacent, the water supply requirements for the principal occupancy shall be used for the remainder of the system.

A.19.2.6.1(3) When a light hazard occupancy, such as a school, contains separate ordinary hazard rooms no more than 400 ft^2 (37 m^2), the hose stream allowance and water supply duration would be that required for a light hazard occupancy.

19.2.6.2* Water allowance for outside hose shall be added to the sprinkler requirement at the connection to the city main or a private fire hydrant, whichever is closer to the system riser.

A.19.2.6.2 When the hose demand is provided by a separate water supply, the sprinkler calculation does not include the outside hose demand.

If no inside hose connections are provided, the outside hose requirement is the value in the "Total Combined Inside and Outside Hose" column in Table 19.3.3.1.2. This relatively small quantity of water is apportioned to the fire department to allow for final and complete extinguishment of the fire. The flow rate established in Table 19.3.3.1.2 can be added to the hydraulic calculations at the connection to the city water main or yard hydrant at the prevailing system pressure. The outside hose stream water typically receives its pressure from the fire department apparatus.

ASK THE AHJ

In cases where the water supply can support the sprinkler system demand only, not including the prescribed hose allowance, is it advisable to approve the system?

As noted in Section 1.5, nothing in this standard prohibits the authority having jurisdiction from making a judgment call to approve alternative arrangements where the level of safety is not lowered. However, the required hose allowance can serve as a safety margin for the water supply as described in B.2.1 where the early operation of the sprinkler system opens fewer sprinklers than the design accounts for, resulting in greater discharge of water at higher pressures than required by the design criteria. Eliminating hose allowances where the water supply is from a municipal source might not be the best way to solve the problem of low pressure or volume.

EDUFIRE.IR

19.2.6.3 Where inside hose connections are planned or are required, the following shall apply:

(1) A total water allowance of 50 gpm (190 L/min) for a single hose connection installation shall be added to the sprinkler requirements.
(2) A total water allowance of 100 gpm (380 L/min) for a multiple hose connection installation shall be added to the sprinkler requirements.
(3) The water allowance shall be added in 50 gpm (190 L/min) increments beginning at the most remote hose connection, with each increment added at the pressure required by the sprinkler system design at that point.

19.2.6.3.1 Where the system is a combined sprinkler/standpipe system (Class I or Class III) and the building is fully sprinklered in accordance with NFPA 13, no inside hose demand shall be required at any of the standpipe outlets.

19.2.6.4* When hose valves for fire department use are attached to wet pipe sprinkler system risers in accordance with 16.15.2, the following shall apply:

(1) The sprinkler system demand shall not be required to be added to standpipe demand as determined from NFPA 14.
(2) Where the combined sprinkler system demand and hose stream allowance of Table 19.3.3.1.2 exceeds the requirements of NFPA 14, this higher demand shall be used.

For a completely sprinklered building using a combined sprinkler and standpipe riser, the pressure and flow demand for the standpipe system, in most cases, exceeds the demand of the sprinkler system. In such cases, the total water demand for hydraulically calculating the size of the combined riser(s) is determined based on NFPA 14, *Standard for the Installation of Standpipe and Hose Systems*, only. The overall sprinkler system, however, is still calculated as determined by NFPA 13. In instances where the sprinkler system demand is greater than the standpipe demand, the sprinkler system demand must be used. It is important to note, however, that NPFA 14 requires both systems to be calculated simultaneously in buildings that are not fully sprinklered.

(3) For partially sprinklered buildings, the sprinkler demand, not including hose stream allowance, as indicated in Figure 19.3.3.1.1 shall be added to the requirements given in NFPA 14.

FAQ [19.2.6.3]

Why are only two hose connections [100 gpm (380 L/min)] required to be calculated in facilities with multiple hose connections?

The size and type of hose connections considered in 19.2.6.3 basically are limited to those necessary for first-aid fire fighting or final extinguishment. Even though more than two such hose connections could be installed within the building, operation of more than two connections simultaneously during an incident is unlikely.

FAQ [19.2.6.3]

How should the inside hose connection addressed in 19.2.6.3 be added to the hydraulic calculations?

The inside hose connection to the sprinkler system should be treated as a large sprinkler by adding the required flow with no consideration for pressure. The required flow at the hose outlet is to be carried through the calculations back to the system riser.

CLOSER LOOK [19.2.6.3]

Understanding Sprinkler Hose Versus Standpipe Hose Connections

The hose connections planned in 19.2.6.3 are not standpipe connections, as defined by NFPA 14, *Standard for the Installation of Standpipe and Hose Systems*. NFPA 14 provides specific requirements for Class II standpipe systems that are intended for building occupant use. Those requirements are considerably more demanding in terms of flow and pressure for the standpipe system than the values given in NFPA 13. NFPA 14 requires that Class II standpipes provide 100 gpm (380 L/min) at 65 psi (4.5 bar).

The distinction between sprinkler hose connections and standpipe hose connections is important. NFPA 13 provides requirements for convenience connections, and NFPA 14 provides requirements for standpipe system connections. Although both types of connections have 1½ in. (40 mm) outlets, Class II standpipe outlets have 1½ in. (40 mm) inlets, and hose connections to sprinkler systems typically have 1 in. (25 mm) inlets. Even in a combined sprinkler/standpipe riser, the standpipe hose connections are not included as hose connections within the sprinkler system demand.

If a building is only partially sprinklered, which is strongly discouraged by 9.1.1 but is allowed for specific conditions by the building code, the sprinkler demand from NFPA 13 and hose demand from NFPA 14 must be added together to determine the discharge criteria for the combined system. This combined demand is necessary because fires can originate in the nonsprinklered area and grow to the point that they activate nearby sprinklers while still requiring full standpipe water supplies to be available for manual suppression in the unprotected portions of the building.

EDUFIRE.IR

A.19.2.6.4 For fully sprinklered buildings, if hose valves or stations are provided on a combination sprinkler riser and standpipe for fire department use in accordance with NFPA 14, the hydraulic calculation for the sprinkler system is not required to include the standpipe allowance.

19.2.7* High Volume Low Speed (HVLS) Fans. The installation of HVLS fans in buildings equipped with sprinklers, including ESFR sprinklers, shall comply with the following:

(1) The maximum fan diameter shall be 24 ft (7.3 m).
(2) The HVLS fan shall be centered approximately between four adjacent sprinklers.
(3) The vertical clearance from the HVLS fan to sprinkler deflector shall be a minimum of 3 ft (0.9 m).
(4) All HVLS fans shall be interlocked to shut down immediately upon a waterflow alarm. Where the building is protected with a fire alarm system, this interlock shall be in accordance with the requirements of *NFPA 72*.

SEE ALSO

The FPRF report *High Volume/Low Speed Fan and Sprinkler Operation — Phase II Research Program* at https://www.nfpa.org/News-and-Research/Fire-statistics-and-reports/Research-reports/Suppression/Low-Speed-Fan-and-Sprinkler-Operation.

High volume low speed (HVLS) fans are being used more frequently in storage facilities and other occupancies because they help maintain a constant temperature and humidity level. The requirement in 19.2.7(4) for the fans to shut down immediately can take up to 100 seconds after activation of a sprinkler. There can be a 60- to 90-second delay by the waterflow switch plus up to 10 seconds by the fire alarm control panel after activation of the waterflow switch.

Due to concerns raised by the insurance industry and regulatory agencies, the Fire Protection Research Foundation (FPRF) conducted research on HVLS fans, which included 10 large-scale fire tests, as well as limited scale testing. The results of that research showed that the shutdown of HVLS fans upon waterflow of the first activating sprinkler plus a 90-second delay resulted in acceptable sprinkler system performance. See Exhibit 19.5 for an example of an HVLS fan.

EXHIBIT 19.5 *A High Volume Low Speed (HVLS) Fan.*

EDUFIRE.IR

A.19.2.7 A series of 10 full-scale fire tests and limited-scale testing were conducted to determine the impact of HVLS fan operation on the performance of sprinkler systems. The project, sponsored by the Property Insurance Research Group (PIRG) and other industry groups, was coordinated by the Fire Protection Research Foundation (FPRF). The complete test report, *High Volume/Low Speed Fan and Sprinkler Operation — Ph. 2 Final Report (2011)*, is available from the FPRF. Both control mode density area and early suppression fast response sprinklers were tested. Successful results were obtained when the HVLS fan was shut down upon the activation of the first sprinkler followed by a 90-second delay. Other methods of fan shutdown were also tested including shutdown by activation of air sampling–type detection and ionization-type smoke detectors. Earlier fan shutdown resulted in less commodity damage.

19.3 Occupancy Hazard Fire Control Approach for Spray Sprinklers.

All aspects and design methods within Section 19.3 are applicable only to spray sprinklers. Prior to the 2013 edition, 19.3.3.1.1 had addressed this issue by requiring only the density/area curve, as shown in Figure 19.3.3.1.1, to be used with spray sprinklers.

19.3.1 General.

19.3.1.1* The water demand requirements shall be determined by either the pipe schedule method in accordance with 19.3.2 or the hydraulic calculation method in accordance with 19.3.3.

A.19.3.1.1 This approach is based on a general occupancy classification applied to the building or a portion of the building.

19.3.1.2 Occupancy Classifications.

19.3.1.2.1 Occupancy classifications for this standard shall relate to sprinkler installations and their water supplies only.

19.3.1.2.2 Occupancy classifications shall not be used as a general classification of occupancy hazards.

19.3.1.2.3 Occupancies or portions of occupancies shall be classified according to the quantity and combustibility of contents, the expected rates of heat release, the total potential for energy release, the heights of stockpiles, and the presence of flammable and combustible liquids, using the definitions contained in 4.3.2 through4.3.7.

19.3.1.2.4 Classifications shall be as follows:

(1) Light hazard
(2) Ordinary hazard (Groups 1 and 2)
(3) Extra hazard (Groups 1 and 2)
(4) Special occupancy hazard *(see Chapter 26)*

19.3.2 Water Demand Requirements — Pipe Schedule Method.

The pipe schedule method is the older means of determining the pipe sizes of the sprinkler system and defining a very broad single water demand for each occupancy hazard classification regardless of the size of the sprinkler system.

19.3.2.1 Table 19.3.2.1 shall be used in determining the minimum water supply requirements for light and ordinary hazard occupancies protected by systems with pipe sized according to the pipe schedules of Section 27.5.

FAQ [19.3.2]

Why has the use of pipe schedule systems been restricted?

The pipe schedule method is an acceptable method in all cases for light and ordinary hazard classifications. Its application, however, is not that common because the hydraulic method typically results in more economical systems. While the pipe schedule method can be considered to be conservative given a strong water supply, it may not accurately produce adequate pipe diameters when the water supply is marginal or weak. Eventually the pipe schedule method may not be used at all.

EDUFIRE.IR

TABLE 19.3.2.1 Water Supply Requirements for Pipe Schedule Sprinkler Systems

Occupancy Classification	Minimum Residual Pressure Required		Acceptable Flow at Base of Riser (Including Hose Stream Allowance)		Duration (minutes)
	psi	bar	gpm	L/min	
Light hazard	15	1	500–750	1900–2850	30–60
Ordinary hazard	20	1.4	850–1500	3200–5700	60–90

19.3.2.2 Pressure and flow requirements for extra hazard occupancies shall be based on the hydraulic calculation methods of 19.3.3.

In 1991, NFPA 13 prohibited the use of the pipe schedule method for new extra hazard occupancies. However, 19.3.2.3(2) permits the use of pipe schedule systems for additions and modifications to existing extra hazard systems.

FAQ [19.3.2.3]

Can the pipe schedule method be used for buildings larger than 5000 ft² (465 m²)?

Pipe schedule systems are restricted to small buildings of 5000 ft² (465 m²) or less or for buildings in excess of 5000 ft² (465 m²) if the required flow is available at a pressure of 50 psi (3.4 bar) at the topmost sprinkler.

19.3.2.3 The pipe schedule method shall be permitted as follows:

(1) Additions or modifications to existing pipe schedule systems sized according to the pipe schedules of Section 27.5
(2) Additions or modifications to existing extra hazard pipe schedule systems
(3) New systems of 5000 ft² (465 m²) or less
(4) New systems exceeding 5000 ft² (465 m²) where the flows required in Table 19.3.2.1 are available at a minimum residual pressure of 50 psi (3.4 bar) at the highest elevation of sprinkler

Existing pipe schedule methods must comply with the provisions of Section 27.5 if they are to be expanded. For a discussion on mixing pipe schedule and hydraulically calculated systems, see the commentary after A.27.2.1.

19.3.2.4 Table 19.3.2.1 shall be used in determining the minimum water supply requirements.

FAQ [19.3.2.5]

When can the lower duration values of Table 19.3.2.1 be used?

The lower duration values are permitted where remote or central station waterflow alarm service is provided, as stated in 19.3.2.5. It is expected that the fire department or fire brigade will be made aware of the fire more quickly than if only a local alarm is employed. Although remote or central station alarm monitoring does not have any impact on sprinkler system performance, it does allow the fire service to arrive at the scene sooner, when the fire is smaller, to initiate the fire attack.

19.3.2.5 The lower duration value of Table 19.3.2.1 shall be acceptable only where the sprinkler system waterflow alarm device(s) and supervisory device(s) are electrically supervised and such supervision is monitored at an approved, constantly attended location.

19.3.2.6* Residual Pressure.

A.19.3.2.6 The additional pressure that is needed at the level of the water supply to account for sprinkler elevation is 0.433 psi/ft (0.098 bar/m) of elevation above the water supply.

19.3.2.6.1 The residual pressure requirement of Table 19.3.2.1 shall be met at the elevation of the highest sprinkler.

The residual pressure requirement is to be applied at the elevation of the highest sprinkler. The process of calculating the available pressure starts at the connection to the water supply, which typically is located at the street but can be located at the base of the riser. The available residual pressure of the water supply at the acceptable flow identified in Table 19.3.2.1 must meet or exceed the minimum residual pressure required, which is also identified in Table 19.3.2.1. For installations larger than 5000 ft² (465 m²), the 50 psi (3.4 bar) required by 19.3.2.3(4) supersedes Table 19.3.2.1.

19.3.2.6.2 Friction Loss Due to Backflow Prevention Valves.

19.3.2.6.2.1 When backflow prevention valves are installed on pipe schedule systems, the friction losses of the device shall be accounted for when determining acceptable residual pressure at the top level of sprinklers.

19.3.2.6.2.2 The friction loss of this device [in psi (bar)] shall be added to the elevation loss and the residual pressure at the top row of sprinklers to determine the total pressure needed at the water supply.

EDUFIRE.IR

Because of the high friction losses associated with backflow devices, the effect of backflow devices on system performance must be considered. The friction loss for the backflow device must be obtained from the device manufacturer and be based on the acceptable flow identified in Table 19.3.2.1.

19.3.2.7 The lower flow figure of Table 19.3.2.1 shall be permitted only where the building is of noncombustible construction or the potential areas of fire are limited by building size or compartmentation such that no open areas exceed 3000 ft² (280 m²) for light hazard or 4000 ft² (370 m²) for ordinary hazard.

FAQ [19.3.2.6.2.2]

What is the pressure loss associated with elevation?

Elevation pressure is the product of the elevation in feet (meters) multiplied by 0.433 psi/ft (0.098 bar/m). This requirement for elevation pressure demonstrates that some calculation is necessary with pipe schedule systems. Traditional pipe schedule approaches required no additional hydraulic calculations.

19.3.3 Water Demand Requirements — Hydraulic Calculation Methods.

19.3.3.1 General.

19.3.3.1.1 The water demand for sprinklers shall be determined only from one of the following, at the discretion of the designer:

(1) Density/area curves of Figure 19.3.3.1.1 in accordance with the density/area method of 19.3.3.2
(2) The room that creates the greatest demand in accordance with the room design method of 19.3.3.3
(3) Special design areas in accordance with 19.3.3.4

The sprinkler discharge criteria addressed in 19.3.3.1.1 are permitted to be determined through hydraulic calculations in accordance with the density/area method of 19.3.3.2, the room design method of 19.3.3.3, or the special design methods of 19.3.3.4. The special design methods mainly apply to building service chutes and spaces protected by a single line of sprinklers, such as corridors.

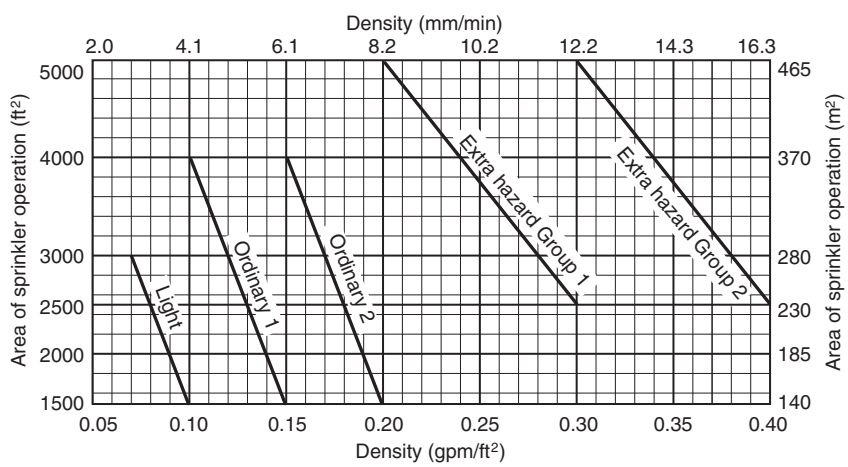

FIGURE 19.3.3.1.1 *Density/Area Curves.*

19.3.3.1.2 The minimum water supply shall be available for the minimum duration specified in Table 19.3.3.1.2.

The discharge criteria for the specific special occupancy hazards identified in Chapter 26 might differ from the requirements of Table 19.3.3.1.2. For example, NFPA 415, *Standard on Airport Terminal Buildings, Fueling Ramp Drainage, and Loading Walkways*, classifies passenger handling areas as ordinary hazard (Group 1) occupancies. Therefore, the discharge criteria for the sprinklers would be in accordance with the ordinary hazard (Group 1) density/area curve in Figure 19.3.3.1.1. However, NFPA 415 requires a hose stream demand of 500 gpm (1900 L/min), which exceeds the 250 gpm (950 L/min) hose stream allowance required by Table 19.3.3.1.2 for ordinary hazard occupancies.

EDUFIRE.IR

DESIGNER'S CORNER [19.3.3.3]

When is it a good idea to use the room design method?

The room design method can be used with any spray sprinkler — quick response, standard response, extended coverage, and quick response extended coverage. The assumption of the room design method is that the number of sprinklers that will open in a fire will be limited to the number of sprinklers in the room. In order for the fire to be limited to the room, the walls must have a significant fire resistance rating (equivalent to the water supply duration requirement for the hazard). The water supply will need to be capable of supplying the flow and pressure to the most demanding room.

Typically, it makes sense to use the room design method in situations where the building is highly compartmented. In buildings with ceilings 10 ft (3.0 m) high or less and protected with quick response sprinklers, the density/area method allows a design of five sprinklers in many circumstances. Therefore, it only makes sense to use the room design method where the number of sprinklers in the most demanding compartment is fewer than five.

To keep the fire in the room of fire origin (validating the assumption that the only sprinklers that need be calculated are those in the room), the doors to the room need to be equipped with automatic or self-closing features. In light hazard occupancies, the automatic or self-closing feature requirement can be waived if two sprinklers in each compartment adjacent to one of the unprotected openings are added to the calculations. For ordinary and extra hazard occupancies that do not have automatic or self-closing features on the openings to a room, the room design method should be expanded to include in the calculation the sprinklers in all the spaces surrounded by walls and doors with automatic or self-closing features. Otherwise, the room design method cannot be used.

When trying to determine whether to use the room design method, it is important to remember that corridors and hallways are considered rooms. If the corridors or hallways are so narrow that they can be protected with a single row of sprinklers, the number of sprinklers to consider is a maximum of five. Even in light hazard occupancies where the rooms do not have automatic or self-closing features, the maximum number of sprinklers calculated in a corridor or hallway is five.

The room design method is not permitted to be used with residential sprinklers. For residential sprinklers, the minimum number of sprinklers that must be calculated is four regardless of the number of sprinklers in the room. If a room has fewer than four sprinklers, the design area must be increased to incorporate sprinklers in adjacent rooms until the minimum design area of four sprinklers has been achieved.

TABLE 19.3.3.1.2 *Hose Stream Allowance and Water Supply Duration Requirements for Hydraulically Calculated Systems*

	Inside Hose		*Total Combined Inside and Outside Hose*		
Occupancy	*gpm*	*L/min*	*gpm*	*L/min*	*Duration (minutes)*
Light hazard	0, 50, or 100	0, 190, or 380	100	380	30
Ordinary hazard	0, 50, or 100	0, 190, or 380	250	950	60–90
Extra hazard	0, 50, or 100	0, 190, or 380	500	1900	90–120

19.3.3.1.3 The lower duration values in Table 19.3.3.1.2 shall be permitted where the sprinkler system waterflow alarm device(s) and supervisory device(s) are electrically supervised and such supervision is monitored at an approved, constantly attended location.

The lower durations given in Table 9.3.3.1.2 typically apply to most NFPA 13 systems since the building codes require them to be electrically monitored except for small systems with fewer than 20 sprinklers. This reduction is permitted because it is expected that the fire department or fire brigade will be made aware of the fire much sooner than if only a local alarm is employed. Although remote or central station alarm monitoring does not have any effect on sprinkler system performance, it does allow the fire service to arrive at the scene more quickly to initiate its fire attack. Because systems designed in accordance with the density/area method are intended to control the fire until the fire department arrives, the earlier the fire department arrives, the less time is needed for the sprinkler system to control the fire.

EDUFIRE.IR

19.3.3.1.4 Restrictions. When either the density/area method or room design method is used, the following shall apply:

(1)* For areas of sprinkler operation less than 1500 ft² (140 m²) used for light and ordinary hazard occupancies, the density for 1500 ft² (140 m²) shall be used.

A.19.3.3.1.4(1) The area of sprinkler operation typically encompasses enough of the floor area to make-up the minimum allowed size of the remote area up to the entire area of a single floor of the building.

(2) For areas of sprinkler operation less than 2500 ft² (230 m²) for extra hazard occupancies, the density for 2500 ft² (230 m²) shall be used.

The sprinkler system is expected to control the fire when the proper discharge density is applied, assuming the system is properly designed, installed, and maintained. Although a sprinkler system can and usually does control or suppress a fire with fewer sprinklers than are required in the design area, restrictions for minimum design areas in accordance with 19.3.3.1.4(1) and 19.3.3.1.4(2) provide a safety factor. A number of factors, such as ventilation and ceiling configuration, can lead to an inconsistent sprinkler operating sequence, that is, skipping of sprinklers. A shielded fire can also require the use of most or all sprinklers in the design area. For all areas — light, ordinary, and extra hazard classifications — the area of operation could be reduced under specific circumstances, but the discharge density cannot.

19.3.3.1.5 Unsprinklered Combustible Concealed Spaces.

19.3.3.1.5.1* When using the density/area or room design method, unless the requirements of 19.3.3.1.5.2 are met for buildings having unsprinklered combustible concealed spaces, as described in 9.2.1 and 9.3.18, the minimum area of sprinkler operation for that portion of the building shall be 3000 ft² (280 m²).

(A) The design area of 3000 ft² (280 m²) shall be applied only to the sprinkler system or portions of the sprinkler system that are adjacent to the qualifying combustible concealed space.

(B) The term *adjacent* shall apply to any sprinkler system protecting a space above, below, or next to the qualifying concealed space except where a barrier with a fire resistance rating at least equivalent to the water supply duration completely separates the concealed space from the sprinklered area.

The intention of 19.3.3.1.5.1 is not to permit the omission of sprinklers from combustible concealed spaces but, rather, to compensate for the anticipated delay of sprinkler operation for a fire originating in an unprotected, combustible concealed space. As noted, 9.2.1 describes the conditions under which sprinklers do not have to be installed in concealed spaces.

The 3000 ft² (280 m²) area of operation requirement also applies to the room design method and supersedes limiting the remote area based only on room size. This requirement has been further clarified by 19.3.3.2.8.2, whereby the 3000 ft² (280 m²) requirement is applied after all other area modifications have been made.

The requirement for buildings having an unprotected, combustible concealed space is that they must have a 3000 ft² (280 m²) remote area. This requirement does not apply to the entire building but only to the portion of the building adjacent to the unprotected, combustible concealed space. The term *adjacent* refers not only to the area horizontally on the floor of interest but also includes the portion of the floors immediately above and below the unprotected, combustible concealed space, unless the adjacent area is separated by fire-rated construction. If the fire-rated assembly itself creates an unprotected, combustible concealed space, the adjacent portions of the building are still required to apply a 3000 ft² (280 m²) area of operation.

A.19.3.3.1.5.1 This section is included to compensate for possible delay in operation of sprinklers from fires in combustible concealed spaces found in wood frame, brick veneer, and ordinary construction.

FAQ [19.3.3.1.4]

What is the assigned operating area for subsystems that are smaller than the minimum area assigned to that occupancy classification?

With a small subsystem, such as a dry pipe system covering a loading dock and fed by an adjacent wet pipe system, the area of sprinkler operation still must be the minimum required size dictated by Figure 19.3.3.1.1 and all modifiers in 19.3.3. If the required area is 1500 ft² (139 m²) and the loading dock is only 800 ft² (75 m²), an additional 700 ft² (65 m²) of floor area must be included from the wet pipe system that is adjacent to the loading dock. The area can be smaller only if the walls are rated such that the area qualifies for the room design method or if the loading dock consists of a single line of sprinklers and thus qualifies for the special design in 19.3.3.4.2.

EDUFIRE.IR

In order for the minimum 3000 ft^2 (280 m^2) requirement for the size of the remote area to not be extended to the adjacent area, the qualifying concealed space must be separated by the entire fire-rated assembly. Such assemblies often have combustible structural members separating the exterior membranes that can create a concealed combustible space that can qualify for omitting sprinkler protection. If the fire-rated assembly is the qualifying concealed space, an interior fire would greatly reduce the assigned fire-rated duration.

19.3.3.1.5.2 The following unsprinklered concealed spaces shall not require a minimum area of sprinkler operation of 3000 ft^2 (280 m^2):

(1) Noncombustible and limited-combustible concealed spaces with minimal combustible loading having no access. The space shall be considered a concealed space even with small openings such as those used as return air for a plenum.
(2) Noncombustible and limited-combustible concealed spaces with limited access and not permitting occupancy or storage of combustibles. The space shall be considered a concealed space even with small openings such as those used as return air for a plenum.
(3) Combustible concealed spaces filled entirely with noncombustible insulation.
(4)* Light or ordinary hazard occupancies where noncombustible or limited-combustible ceilings are directly attached to the bottom of solid wood joists or solid limited-combustible construction or noncombustible construction so as to create enclosed joist spaces 160 ft^3 (4.5 m^3) or less in volume, including space below insulation that is laid directly on top or within the ceiling joists in an otherwise sprinklered concealed space.

A.19.3.3.1.5.2(4) Composite wood joists are not considered solid wood joists for the purposes of this section. Their web members are too thin and easily penetrated to adequately compartment a fire in an unsprinklered space. Application of this item is not affected by the depth of the joist channel except in determining the volume. The concealed space above the insulation can be an attic, roof space, or floor space within a floor assembly.

(5) Concealed spaces where rigid materials are used and the exposed surfaces comply with one of the following in the form in which they are installed in the space:
  (a) The surface materials have a flame spread index of 25 or less and the materials have been demonstrated to not propagate fire more than 10.5 ft (3.2 m) when tested in accordance with ASTM E84, *Standard Test Method for Surface Burning Characteristics of Building Materials,* or UL 723, *Standard for Test for Surface Burning Characteristics of Building Materials*, extended for an additional 20 minutes in the form in which they are installed in the space or
  (b) The surface materials comply with the requirements of ASTM E2768, *Standard Test Method for Extended Duration Surface Burning Characteristics of Building Materials (30 min Tunnel Test)*.
(6) Concealed spaces in which the exposed materials are constructed entirely of fire-retardant-treated wood as defined by NFPA 703.
(7) Concealed spaces over isolated small rooms not exceeding 55 ft^2 (5.1 m^2) in area.
(8) Vertical pipe chases under 10 ft^2 (0.9 m^2), provided that in multifloor buildings the chases are firestopped at each floor using materials equivalent to the floor construction, and where such pipe chases contain no sources of ignition, piping shall be noncombustible, and pipe penetrations at each floor shall be properly sealed.
(9) Exterior columns under 10 ft^2 (0.9 m^2) in area formed by studs or wood joists, supporting exterior canopies that are fully protected with a sprinkler system.
(10)* Light or ordinary hazard occupancies where noncombustible or limited-combustible ceilings are attached to the bottom of composite wood joists either directly or on to metal channels not exceeding 1 in. (25 mm) in depth, provided the adjacent joist channels are firestopped into volumes not exceeding 160 ft^3 (4.5 m^3) using materials equivalent to ½ in. (13 mm) gypsum board, and at least 3½ in. (90 mm) of batt insulation is installed at the bottom of the joist channels when the ceiling is attached utilizing metal channels.

EDUFIRE.IR

A.19.3.3.1.5.2(10) The gypsum board (or equivalent material) used as the firestopping will compartment the concealed space and restrict the ability for fire to spread beyond 160 ft^3 (4.5 m^3) zones covering multiple joist channels.

(11) Cavities within unsprinklered wall spaces.

The list in 19.3.3.1.5.2 clarifies that the 3000 ft^2 (280 m^2) design area does not apply where certain unsprinklered concealed spaces are present.

19.3.3.2 Density/Area Method.

19.3.3.2.1 Water Supply.

19.3.3.2.1.1 The water supply requirement for sprinklers only shall be calculated from the density/area curves of Figure 19.3.3.1.1 or from Chapter 26 where density/area criteria are specified for special occupancy hazards.

19.3.3.2.1.2 When using Figure 19.3.3.1.1, the calculations shall satisfy any single point on the appropriate density/area curve.

19.3.3.2.1.3 When using Figure 19.3.3.1.1, it shall not be necessary to meet all points on the selected curves.

Selection of a point on the low end — that is, smaller operating area — of a density/area curve of Figure 19.3.3.1.1 can result in a somewhat higher density but a lower total water demand. Although the higher density also requires a higher pressure, it generally is considered superior in terms of fire control and is expected to confine the fire to a smaller area, reducing the total number of operating sprinklers. The lowest point on the density/area curve also typically presents the most economical system.

Selection of a point on the high end or larger operating area of the density/area curve allows for a lower density, and therefore, lower pressure for the starting sprinkler but a higher total water demand for the system, as well as a larger fire. Therefore, more sprinklers would be expected to operate. The reduction for the starting pressure is of marginal benefit, since the increase in total water demand causes a significant increase in friction loss that quickly exceeds the pressure reduced for the starting sprinkler. Additionally, the available pressure from the water supply decreases as the water volume increases.

The area of operation shown on the vertical axis of Figure 19.3.3.1.1 is independent of the building's size. Selection of a density/area combination can limit the number of sprinklers expected to operate to the area selected from the density/area curve.

19.3.3.2.2 Sprinklers.

19.3.3.2.2.1 The densities and areas provided in Figure 19.3.3.1.1 shall be for use only with spray sprinklers.

19.3.3.2.2.2 Quick-response sprinklers shall not be permitted for use in extra hazard occupancies or other occupancies where there are substantial amounts of flammable liquids or combustible dusts.

19.3.3.2.2.3 For extended coverage sprinklers, the minimum design area shall be that corresponding to the hazard in Figure 19.3.3.1.1 or the area protected by five sprinklers, whichever is greater.

Paragraph 19.3.3.2.2.3 clarifies that extended coverage sprinklers have a minimum design area, namely the area that comprises not fewer than five sprinklers or the associated area from the density/area curve. For a light or ordinary hazard occupancy, the curve could be as low as 900 ft^2 (84 m^2) for quick-response sprinklers in a 10 ft (3.0 m) ceiling to 1500 ft^2 (140 m^2).

For a standard-response extended coverage sprinkler listed for use in light hazard occupancies and a protection area per sprinkler of 20 ft × 20 ft (6.1 m × 6.1 m), the design area would be 2000 ft^2 (185 m^2) — that is, 400 ft^2 (37 m^2) per sprinkler multiplied by five sprinklers.

FAQ [19.3.3.2.2.2]

Why does 19.3.3.2.2.2 prohibit the use of quick-response sprinklers in extra hazard occupancies?

Paragraph 19.3.3.2.2.2 imposes a limit on the use of quick-response sprinklers in extra hazard occupancies due to concerns that a rapidly growing, high-challenge fire could cause an excessive number of quick-response sprinklers to open before the initial operating sprinklers had the time required to control the fire. This is similar to the restriction in 21.1.7 for storage applications.

EDUFIRE.IR

For a quick-response extended coverage sprinkler, the minimum area depends on the possible modifiers to the operating area. If the reduction of the remote area per 19.3.3.2.3 is not applicable, such as for a dry pipe system, or the ceiling is at least 20 ft (6.1 m) high and the extended coverage sprinkler is listed with a protection area of 16 ft × 16 ft (4.9 m × 4.9 m), the design area would be based on a 1500 ft² (140 m²) area of operation. In this case, the sprinkler is listed to cover 256 ft² (24 m²). Multiplying the minimum five-sprinkler design area by 256 ft² (24 m²) results in an area of operation of 1280 ft² (125 m²).

The requirements of 19.3.3.2.2.3 require the larger area of 1500 ft² (140 m²) from the density/area curve or the five-sprinkler design area. If the reduction of area is applicable such that the minimum area for the density/area was 900 ft² (84 m²), then the 1280 ft² (125 m²) area would be required. The presence of sloped ceilings as dictated in 19.3.3.2.4 will also affect whether the density/area curve or the minimum of five sprinklers dictates the size of the remote area.

19.3.3.2.2.4 Extended coverage sprinklers shall be listed with and designed for the minimum flow corresponding to the density for the hazard as specified in Figure 19.3.3.1.1.

19.3.3.2.3 Quick-Response Sprinklers.

19.3.3.2.3.1 Where listed quick-response sprinklers, including extended coverage quick-response sprinklers, are used throughout a system or portion of a system having the same hydraulic design basis, the system area of operation shall be permitted to be reduced without revising the density as indicated in Figure 19.3.3.2.3.1 when all of the following conditions are satisfied:

(1) Wet pipe system
(2) Light hazard or ordinary hazard occupancy
(3) 20 ft (6.1 m) maximum ceiling height
(4) No unprotected ceiling pockets as allowed by 10.2.9 and 11.2.8 exceeding 32 ft² (3.0 m²)
(5) No unprotected areas above cloud ceilings as allowed by 9.2.7

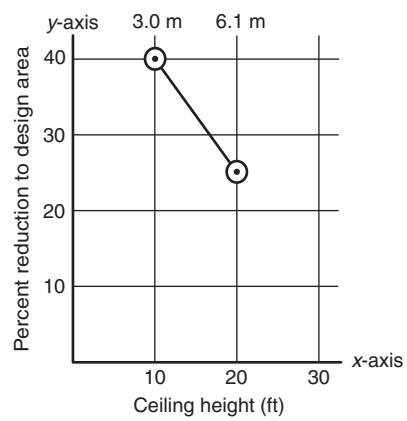

Note: $y = \frac{-3x}{2} + 55$ for U.S. Customary Units

Note: $y = -4.8x + 54.6$ for S.I. Units

For ceiling height ≥10 ft and ≤20 ft, $y = \frac{-3x}{2} + 55$

For ceiling height <10 ft, $y = 40$

For ceiling height >20, $y = 0$

For SI units, 1 ft = 0.31 m.

FIGURE 19.3.3.2.3.1 *Design Area Reduction for Quick-Response Sprinklers.*

EDUFIRE.IR

It is important to note that A.10.2.9.1, which addresses standard spray sprinklers, and A.11.2.8.2(4), which addresses extended coverage sprinklers, clarify that when sprinklers are installed at the lower elevation of a ceiling and are within 12 in. (300 mm) of the top of the pocket, that pocket is considered protected and in compliance with 10.2.9 or 11.2.8. As a result, the reduction for quick-response sprinklers permitted by 19.3.3.2.3.1 is still applicable.

The area reduction for a ceiling height of 11 ft 0 in (3.4 m), as shown in Exhibit 19.6, can be determined from the following formula:

Where y = percent reduction in design area and
x = ceiling height

$$y = -3x/2 + 55$$
$$y = -3(11)/2 + 55$$
$$y = 38.5 \text{ percent}$$

Therefore, only 61.5 percent of the original remote area is required to be calculated.

$$1500 \text{ ft}^2 \times 0.615 = 922.5 \text{ ft}^2$$

For SI units:

$$y = -4.8x + 54.6$$
$$y = -4.8(3.4) + 54.6$$
$$y = 38.3 \text{ percent}$$

Therefore, only 61.7 percent of the original remote area is required to be calculated:

$$140 \text{ m}^2 \times 0.617 = 86.4 \text{ m}^2$$

In this example, given a sprinkler spacing ($S \times L = A$) of

$$12 \text{ ft} \times 10 \text{ ft} = 120 \text{ ft}^2$$
$$1500 \text{ ft}^2/120 \text{ ft}^2 = 12.5$$

13 sprinklers (12.5 rounded up to 13) must be calculated.

For the number of sprinklers per branchline:

$$1.2 \sqrt{1500} = 46.47/12 \text{ ft} = 3.8725$$

4 sprinklers (3.8725 rounded up to 4).

For SI units ($S \times L = A$):

$$3.7 \text{ m} \times 3 \text{ m} = 11.1 \text{ m}^2$$
$$140 \text{ m}^2/11.1 \text{ m}^2 = 12.6$$

13 sprinklers (12.6 rounded up to 13) must be calculated.

For the number of sprinklers per branchline:

$$1.2 \sqrt{140}/3.7 \text{ m} = 3.8$$

4 sprinklers (3.8 rounded up to 4)

Considering the area reduction:

$$922.5 \text{ ft}^2/120 \text{ ft}^2 = 7.6875$$

8 sprinklers (7.6875 rounded up to 8) must be calculated.

For the number of sprinklers per branchline:

$$1.2 \sqrt{922.5} = 36.45/12 = 3.0375$$

4 sprinklers (3.0375 rounded up to 4)

For SI units:

$$86.4 \text{ m}^2 / 11.1 \text{ m}^2 = 7.7837$$

8 sprinklers (rounded up to 8) must be calculated.

For the number of sprinklers per branchline:

$$1.2 \sqrt{86.4} = 11.15 / 3.7 = 3.0146$$

4 sprinklers (3.0146 rounded up to 4)

EDUFIRE.IR

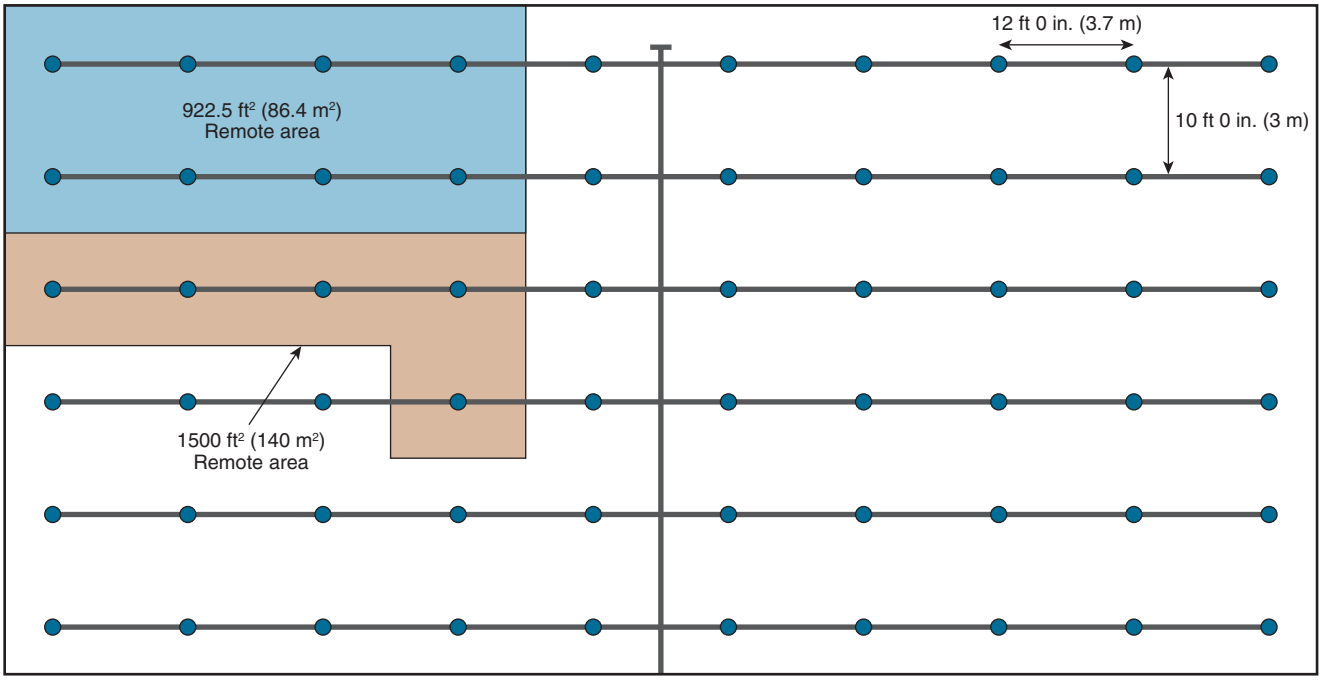

EXHIBIT 19.6 *Remote Area Reduction Due to Quick-Response Sprinklers.*

19.3.3.2.3.2 The number of sprinklers in the design area shall never be less than five.

19.3.3.2.3.3 Where quick-response sprinklers are used on a sloped ceiling or roof, the maximum ceiling or roof height shall be used for determining the percent reduction in design area.

FAQ [19.3.3.2.3.3]

Are quick-response sprinklers required throughout the entire building per 19.3.3.2.3.3?

The use of quick-response sprinklers is not required throughout the entire building. It is recognized that different portions of the building or portions of a single floor can be based on different designs. The portion of the building in which the pipe size is based on a reduced remote area must use quick-response sprinklers.

The reduction in design area for quick-response sprinklers ranges from a maximum of 40 percent for ceiling heights of 10 ft (3.0 m) and less to 25 percent for ceiling heights of 20 ft (6.1 m). The design area reduction is based on comparative tests of quick-response and standard-response spray sprinklers, which demonstrated that the earlier water is applied, the smaller the size of the fire. The smaller fire size, in turn, results in the operation of fewer sprinklers.

The time of sprinkler activation is the result of a number of factors in addition to sprinkler thermal sensitivity, including temperature rating of sprinklers, spacing of sprinklers, distance of the sprinklers below the ceiling, ceiling height, and the fire itself. With the exception of ceiling height, however, most of those factors are controlled within specified ranges by NFPA 13 provisions for a particular occupancy class. The reduction in operating area provides valid proof of the increased effectiveness of quick-response sprinklers with regard to ceiling heights.

19.3.3.2.4 Sloped Ceilings. The system area of operation shall be increased by 30 percent without revising the density when the following types of sprinklers are used on sloped ceilings with a pitch exceeding 1 in 6 (a rise of 2 units in a run of 12 units, a roof slope of 16.7 percent) in nonstorage applications:

(1) Spray sprinklers, including extended coverage sprinklers listed in accordance with 11.2.1(4), and quick-response sprinklers
(2) CMSA sprinklers

The design area increase of 30 percent for sloped ceilings with a pitch exceeding 2 in 12 (16.7 percent) is based on the test work and modeling conducted at FM Global. In those tests, slopes greater than 16.7 percent resulted in erratic sprinkler operating patterns that could adversely affect sprinklers operating outside the design area. Heat from the fire is likely to accumulate near the peak of the slope and to activate

EDUFIRE.IR

sprinklers that are some distance from the fire. Paragraph 19.3.3.2.4 compensates for the fact that more sprinklers are expected to operate under steeply pitched surfaces. The modifier applies to all sprinklers permitted under a sloped ceiling, including quick-response sprinklers.

The 30 percent area increase does not apply to sprinklers that utilize methods other than the density/area method to determine their discharge criteria, such as residential sprinklers. Additionally, its application does not permit the use of sprinklers that are limited to slopes of no more than 2 in 12, such as extended coverage and ESFR sprinklers. (See 11.2.1 and 14.2.3.)

The design area increase is intended to apply only to continuously sloped ceilings or roofs, such as those in large attic spaces. The increase is not intended to apply to sawtooth roofs or other similar situations in which the extent of the slope is small relative to the sprinkler design area.

19.3.3.2.5* Dry Pipe and Double Interlock Preaction Systems. For dry pipe systems and double interlock preaction systems, the area of sprinkler operation shall be increased by 30 percent without revising the density.

The delivery of water to operated or open sprinklers in dry pipe and double interlock preaction sprinkler systems takes longer than it does for wet pipe systems and non-interlock or single interlock preaction systems. Because of that delay, system size, in terms of volume, is limited (see 8.3.2.2). To compensate for this delay, a 30 percent increase in the design area is mandated. The increase is necessary, because more sprinklers in the fire area are expected to operate while air is discharged and the pipe is being filled with water, and the fire will be larger when water reaches the operating sprinklers. The 30 percent increase is applied in the following example.

If the density and area for an ordinary hazard (Group 2) occupancy are selected at 0.20 gpm/ft^2 (8.2 mm/min) and 1500 ft^2 (140 m^2) (see Figure 19.3.3.1.1), the density would be adjusted for a dry pipe system as follows:

For U.S. units:

$$(30 \text{ percent} \times 1500 \text{ ft}^2) + 1500 \text{ ft}^2 = 1950 \text{ ft}^2$$

For SI units:

$$(30 \text{ percent} \times 140 \text{ m}^2) + 140 \text{ m}^2 = 182 \text{ m}^2$$

The density of 0.20 gpm/ft^2 (8.2 mm/min) remains unchanged. The 30 percent area increase rule does not apply to preaction systems other than double interlock preaction systems. Even though the pipe has no water in it, the delay in operation of non-interlock and single interlock systems is acceptable. That is because the detection device that releases the preaction valve typically responds to the fire sooner than the sprinkler. It is not the case for higher-challenge fires, such as storage applications, where 20.13.3 requires a 30 percent area increase for all types of preaction systems.

SEE ALSO

The commentary following 8.3.2.1 for guidance on single interlock and non-interlock systems.

A.19.3.3.2.5 Where extended coverage sprinklers are used and the design area (after appropriate increases) is satisfied by five sprinklers, no additional increase is required. With regard to preaction systems, the discharge criteria of Chapter 19 are written based upon the assumption that the release system will activate before the sprinkler system. It is generally accepted that smoke detectors and rate-of-rise detectors are more sensitive than sprinklers and that fixed-temperature release devices with RTIs lower than sprinklers will react faster than sprinklers at similar spacings and locations.

19.3.3.2.6 High-Temperature Sprinklers. Where high-temperature sprinklers are used for extra hazard occupancies, the area of sprinkler operation shall be permitted to be reduced by 25 percent without revising the density, but not to less than 2000 ft^2 (185 m^2).

Fire tests for extra hazard occupancies using sprinklers with nominal K-factors of 5.6 and 8.0 indicate that fewer high-temperature sprinklers operate compared with ordinary temperature–rated sprinklers. This allowance applies equally to 11.2 and larger sprinklers. For storage, 21.1.9 allows larger orifice sprinklers a similar reduction even for an ordinary temperature rating. However, larger sprinklers have no effect on this allowance for the occupancy hazard approach except as allowed by 19.3.3.2.7. Use of high-temperature sprinklers for light and ordinary hazard applications is restricted to those conditions defined in 9.4.2.

EDUFIRE.IR

19.3.3.2.7 Where K-11.2 (160) or larger sprinklers are used with Extra Hazard Group 1 or Extra Hazard Group 2 design curves and 19.3.3.1.1, the design area shall be permitted to be reduced by 25 percent but not below 2000 ft² (185 m²), regardless of temperature rating.

19.3.3.2.8* Multiple Adjustments.

A.19.3.3.2.8 *Example 1*. A dry pipe sprinkler system (OH2) in a building with a ceiling slope exceeding 2 in 12 in. (50 in 300 mm) (16.6 percent slope). The initial area must be increased 30 percent for the dry pipe system and the resulting area an additional 30 percent for the roof slope. If the point 0.2 gpm/ft² (8.2 mm/min) over 1500 ft² (140 m²) is chosen from Figure 19.3.3.1.1, the 1500 ft² (140 m²) area is increased 450 ft² (42 m²) to 1950 ft² (180 m²), which is then further increased 585 ft² (54 m²). The final discharge criterion is then 0.2 gpm/ft² (8.2 mm/min) over 2535 ft² (235 m²).

Example 2. A wet pipe sprinkler system (light hazard) in a building with a 16 ft 8 in. (5.1 m) ceiling and a slope exceeding 2 in 12 in. (50 in 300 mm) (16.6 percent slope) employs quick-response sprinklers qualifying for a 30 percent reduction as permitted by 19.3.3.2.3. The initial area must be increased 30 percent for the ceiling slope and the resulting area decreased 30 percent for quick-response sprinklers. It does not matter whether the reduction is applied first. If a discharge density of 0.1 gpm/ft² (4.1 mm/min) over 1500 ft² (140 m²) is chosen from Figure 19.3.3.1.1, the 1500 ft² (140 m²) is increased 450 ft² (42 m²), resulting in 1950 ft² (180 m²), which is then decreased 585 ft² (54 m²). The final design is 0.1 gpm/ft² (4.1 mm/min) over 1365 ft² (125 m²).

19.3.3.2.8.1 Where multiple adjustments to the area of operation are required to be made in accordance with 19.3.3.2.3, 19.3.3.2.4, 19.3.3.2.5, or 19.3.3.2.6, these adjustments shall be compounded based on the area of operation originally selected from Figure 19.3.3.1.1.

19.3.3.2.8.2 If the building has unsprinklered combustible concealed spaces, the rules of 19.3.3.1.4 shall be applied after all other modifications have been made.

The order in which simultaneous modifications for a dry pipe system, quick-response sprinklers, sloped ceilings, or high-temperature sprinklers are applied to the area of system operation is not important, provided that the 3000 ft² (280 m²) minimum area limitation for unsprinklered concealed spaces is applied last. Additionally, where simultaneous modifications are made, the adjustments must be compounded, based on the initial operating area selected from the density/area curve of Figure 19.3.3.1.1 . For example, starting with 1500 ft² (140 m²) and adding a 30 percent modification results in 1950 ft² (180 m²). If the modifier for sloped ceilings also applies, the 30 percent increase is applied to 1950 ft² (180 m²), resulting in a compounded area of 2535 ft² (235 m²).

19.3.3.3 Room Design Method.

19.3.3.3.1* The water supply requirements for sprinklers only shall be based upon the room that creates the greatest demand.

A.19.3.3.3.1 This subsection allows for calculation of the sprinklers in the largest room, so long as the calculation produces the greatest hydraulic demand among selection of rooms and communicating spaces. For example, in a case where the largest room has four sprinklers and a smaller room has two sprinklers but communicates through unprotected openings with three other rooms, each having two sprinklers, the smaller room and group of communicating spaces should also be calculated.

Corridors are rooms and should be considered as such.

Walls can terminate at a substantial suspended ceiling and need not be extended to a rated floor slab above for this section to be applied.

The room design method, which also is referred to as the largest room design method, applies to rooms of light hazard, ordinary hazard, and extra hazard occupancies. When opting for this approach, the designer must use the room that is also the most hydraulically demanding in terms of water supply and pressure. The enclosing walls of such a room must provide a fire resistance rating equal to the water supply duration

EDUFIRE.IR

requirements of Table 19.3.3.1.2 for the applicable occupancy hazard. If two values are given for an occupancy, the lower value can be used where remote station or central station waterflow alarm service is provided. (See 19.3.3.1.3.)

19.3.3.3.2 The density selected shall be that from Figure 19.3.3.1.1 corresponding to the occupancy hazard classification and room size.

19.3.3.3.3 To utilize the room design method, all rooms shall be enclosed with walls having a fire-resistance rating equal to the water supply duration indicated in Table 19.3.3.1.2.

19.3.3.3.4 If the room is smaller than the area specified in Figure 19.3.3.1.1, the provisions of 19.3.3.1.4(1) and 19.3.3.1.4(2) shall apply.

19.3.3.3.5 Minimum protection of openings shall be as follows:

(1) Light hazard — Nonrated automatic or self-closing doors.
(2) Light hazard with no opening protection — Where openings are not protected, calculations shall include the sprinklers in the room plus two sprinklers in the communicating space nearest each such unprotected opening unless the communicating space has only one sprinkler, in which case calculations shall be extended to the operation of that sprinkler. The selection of the room and communicating space sprinklers to be calculated shall be that which produces the greatest hydraulic demand. For light hazard occupancies with unprotected openings in walls, a minimum lintel of depth of 8 in. (200 mm) is required for openings and the opening shall not exceed 8 ft (2.4 m) in width. It shall be permitted to have a single opening of 36 in. (900 mm) or less without a lintel, provided there are no other openings to adjoining spaces.
(3) Ordinary and extra hazard — Automatic or self-closing doors with appropriate fire resistance ratings for the enclosure.

FAQ [19.3.3.3.5]

Are the automatic or self-closing doors required by 19.3.3.3.5(3) required to be rated fire doors for all occupancies?

Any communicating openings into the room are to be protected in the same manner as any opening in a fire-resistive partition, with the exception that any nonrated or rated self-closing or automatic doors satisfy the protection requirement for light hazard occupancies. Communicating openings are all passages into connected compartments, including closets, and they are not restricted to egress paths.

19.3.3.3.6 Where the room design method is used and the area under consideration is a corridor protected by a single row of sprinklers with protected openings in accordance with 19.3.3.3.5, the maximum number of sprinklers that needs to be calculated is five or, when extended coverage sprinklers are installed, all sprinklers contained within 75 linear feet (23 linear meters) of the corridor.

If a corridor is present, the designer has to calculate the largest room as well as the five sprinklers in the corridor to determine if the largest room or the corridor requires the higher water supply. Due to the anticipated limited fuel load in the corridor, including additional sprinklers from the communicating rooms to the five-sprinkler design is not necessary. It is necessary, however, to add the additional sprinklers required by 19.3.3.3.5(2) when evaluating a room, and a corridor is a communicating space from the room of interest.

FAQ [19.3.3.3.6]

Do the design area increases and decreases of 19.3.3.2 apply when the room design method is used?

When use is made of the room design method, the various design area increases and decreases of 19.3.3.2 do not apply.

19.3.3.3.7 Where the area under consideration is a corridor protected by a single row of sprinklers with unprotected openings, in a light hazard occupancy, the design area shall include all sprinklers in the corridor to a maximum of five or, when extended coverage sprinklers are installed, all sprinklers within 75 linear feet (23 linear meters) of the corridor.

19.3.3.4 Special Design Areas.

19.3.3.4.1 Where the design area consists of a building service chute supplied by a separate riser, the maximum number of sprinklers that needs to be calculated is three, each with a minimum discharge of 15 gpm (57 L/min).

19.3.3.4.2* Where an area is to be protected by a single line of sprinklers, the design area shall include all sprinklers on the line up to a maximum of seven.

Where a long, narrow space is protected with more than seven sprinklers on one line, it is unlikely that all sprinklers in the space will activate, unless the sprinkler system is overwhelmed. This method applies to all occupancy hazard classifications and covers spaces such as an interior corridor or an exterior loading dock.

EDUFIRE.IR

A.19.3.3.4.2 This section is intended to apply to all types of systems including dry pipe and preaction systems.

19.3.3.4.3 Sprinklers in ducts as described in Section 8.9 and 9.3.9 shall be hydraulically designed to provide a discharge pressure of not less than 7 psi (0.5 bar) at each sprinkler with all sprinklers within the duct flowing.

19.3.3.4.4 Stair Towers. Stair towers, or other construction with incomplete floors, if piped on independent risers, shall be treated as one area with reference to pipe sizes.

19.4 Special Design Approaches.

FAQ [19.4.1]

Where are residential sprinklers permitted?

The spaces in which residential sprinklers can be used within the scope of NFPA 13 are identified in Chapter 12. Because residential sprinklers were developed to protect against residential fire scenarios, they are permitted in residential portions (primarily dwelling units) of all buildings, regardless of size or height. For example, NFPA 13 permits the use of residential sprinklers in high-rise apartment buildings.

19.4.1 Residential Sprinklers.

In accordance with 19.4.1.4.1, nonresidential spaces (those primarily outside of dwelling units) must be protected with other types of sprinklers appropriate for the hazard. NFPA 13R, *Standard for the Installation of Sprinkler Systems in Low-Rise Residential Occupancies,* is available as an alternative to NFPA 13 for residential occupancies in low-rise buildings as allowed by the building code. NFPA 13R does not address all types of residential facilities. Where sprinkler systems are being considered for single-family homes, NFPA 13D, *Standard for the Installation of Sprinkler Systems in One- and Two-Family Dwellings and Manufactured Homes,* should be used. NFPA provides three different design and installation standards for residential sprinklers. However, the differences in scope among NFPA 13, NFPA 13R, and NFPA 13D need to be understood, because the design and performance objectives of the three documents are significantly different.

19.4.1.1* The design area shall be the area that includes the four adjacent sprinklers that produce the greatest hydraulic demand.

NFPA 13D requires the sprinkler system design to be based on a maximum of two operating sprinklers. Two sprinklers are considered satisfactory for a one- or two-family dwelling, but the four-sprinkler design area required for an NFPA 13 system is intended to compensate for conditions that could occur in a larger residential occupancy, such as an apartment or a hotel.

Unlike the four-sprinkler design basis of NFPA 13R, the four-sprinkler design area in NFPA 13 must be determined without regard to compartment boundaries. The NFPA 13 residential design area consists of the four contiguous sprinklers that together produce the greatest demand, even if they are located in four individual adjacent compartments.

Although the contents of all residential dwellings are expected to be relatively the same, NFPA 13 provides a greater level of protection than NFPA 13D or NFPA 13R to account both for life safety and for property protection of much larger buildings. A higher level of protection is accomplished by requiring a larger remote area and a greater sprinkler discharge (see 19.4.1.3).

A.19.4.1.1 In Figure A.19.4.1.1(a), calculate the area indicated by the heavy outline and X. The circle indicates sprinklers.

The protection area for residential sprinklers with extended coverage areas is defined in the listing of the sprinkler as a maximum square area for pendent sprinklers or a square or rectangular area. Listing information is presented in even 2 ft (0.6 m) increments for residential sprinklers. When a sprinkler is selected for an application, its area of coverage must be equal to or greater than both the length and width of the hazard area. For example, if the hazard to be protected is a room 14 ft 6 in. (4.4 m) wide and 20 ft 8 in. (6.3 m) long, a sprinkler that is listed to protect an area of 16 ft × 22 ft (4.9 m × 6.7 m) must be selected. The flow used in the calculations is then selected as the flow required by the listing for the selected coverage. *[See Figure A.19.4.1.1(b).]*

19.4.1.2* Unless the requirements of 19.3.3.1.5.2 are met for buildings having unsprinklered combustible concealed spaces, as described in 9.2.1 and 9.3.18, the minimum design area of sprinkler operation for that portion of the building shall be eight sprinklers.

A.19.4.1.2 It should be noted that the provisions of Section 19.3 do not normally apply to the residential sprinkler design approach. The reference to 19.3.3.1.5.2 is merely to provide a

EDUFIRE.IR

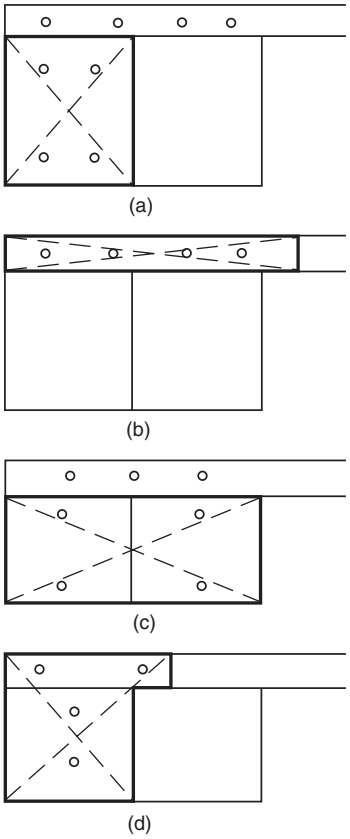

FIGURE A.19.4.1.1(a) Examples of Design Area for Dwelling Units.

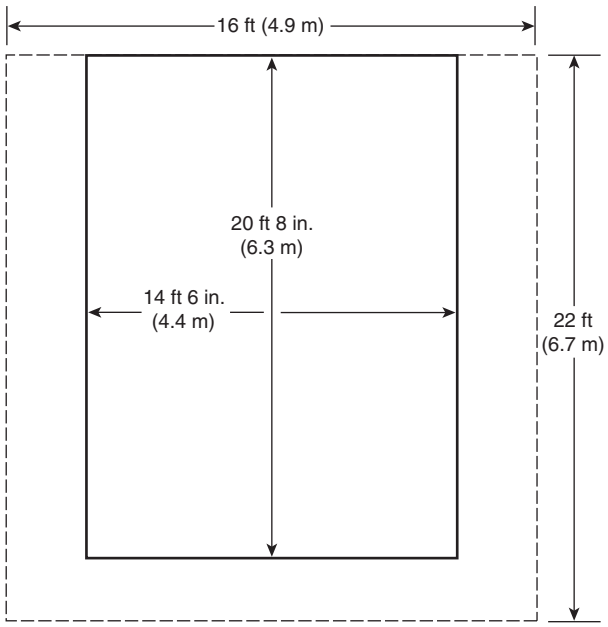

FIGURE A.19.4.1.1(b) Determination of Protection Area of Coverage for Residential Sprinklers.

consistent approach between the occupancy hazard fire control approach and the residential sprinkler design approach with respect to unsprinklered combustible concealed spaces.

19.4.1.2.1* The design area of eight sprinklers shall be applied only to the portion of the residential sprinklers that are adjacent to the qualifying combustible concealed space.

A.19.4.1.2.1 In order for the minimum eight sprinkler requirement for the size of the remote area to not be extended to the adjacent area, the qualifying concealed space must be separated by the entire fire-rated assembly. Such assemblies often have combustible structural members separating the exterior membranes that can create a concealed combustible space that can qualify for omitting sprinkler protection. If the fire-rated assembly is the qualifying concealed space, an interior fire would greatly reduce the assigned fire-rated duration.

19.4.1.2.2 The term *adjacent* shall apply to any sprinkler system protecting a space above, below, or next to the qualifying concealed space except where a barrier with a fire resistance rating at least equivalent to the water supply duration completely separates the concealed space from the sprinklered area.

SEE ALSO

The commentary following 19.3.3.1.5.1 for information on the separation from the adjacent area.

19.4.1.3 Unless the requirements of 19.4.1.4 are met, the minimum required discharge from each design area sprinkler shall be the greater of the following:

(1) In accordance with minimum flow rates indicated in the sprinkler listings
(2) In rooms or compartments greater than 800 ft^2 (74 m^2), calculated based on delivering a minimum of 0.1 gpm/ft^2 (4.1 mm/min) over the design area in accordance with the provisions of 9.5.2.1

EDUFIRE.IR

(3) In rooms or compartments 800 ft^2 (74 m^2) or less calculated based on delivering a minimum of 0.1 gpm/ft^2 (4.1 mm/min) over the room or the compartment using the area of the room divided by the number of sprinklers in the room

19.4.1.4 For modifications or additions to existing systems equipped with residential sprinklers, the listed discharge criteria less than 0.1 gpm/ft^2 (4.1 mm/min) shall be permitted to be used.

19.4.1.4.1 Where replacing residential sprinklers manufactured prior to 2003 that are no longer available from the manufacturer and that are installed using a design density less than 0.05 gpm/ft^2 (2.04 mm/min), a residential sprinkler with an equivalent K-factor (± 5 percent) shall be permitted to be used provided the currently listed coverage area for the replacement sprinkler is not exceeded.

19.4.1.5 Where areas such as attics, basements, or other types of occupancies are outside of dwelling units but within the same structure, these areas shall be protected as a separate design basis in accordance with Section 19.2.

19.4.1.6 Hose stream allowance and water supply duration requirements shall be in accordance with those for light hazard occupancies in Table 19.3.3.1.2.

19.4.2 Exposure Protection.

19.4.2.1* Piping shall be hydraulically calculated in accordance with Section 27.2 to furnish a minimum of 7 psi (0.5 bar) at any sprinkler with all sprinklers facing the exposure operating.

A.19.4.2.1 If the system is a deluge type, all the sprinklers need to be calculated even if they are located on different building faces.

19.4.2.2 Where the water supply feeds other fire protection systems, it shall be capable of furnishing total demand for such systems as well as the exposure system demand.

19.4.3 Water Curtains.

19.4.3.1 Sprinklers in a water curtain such as described in 9.3.5 or 9.3.13.2 shall be hydraulically designed to provide a discharge of 3 gpm per lineal foot (37 L/min per lineal meter) of water curtain, with no sprinklers discharging less than 15 gpm (57 L/min).

19.4.3.2 For water curtains employing automatic sprinklers, the number of sprinklers calculated in this water curtain shall be the number in the length corresponding to the length parallel to the branch lines in the area determined by 27.2.4.2.

N **19.4.3.3** For a deluge system water curtain providing proscenium opening protection in accordance with 9.3.13.2, the water curtain shall be calculated to supply all of the open sprinklers attached thereto.

19.4.3.4 Sprinklers Under Roof or Ceiling in Combustible Concealed Spaces of Wood Joist or Wood Truss Construction with Members 3 ft (0.9 m) or Less on Center and Slope Having Pitch of 4 in 12 or Greater.

19.4.3.4.1 Where sprinkler spacing does not exceed 8 ft (2.4 m) measured perpendicular to the slope, the minimum sprinkler discharge pressure shall be 7 psi (0.5 bar).

19.4.3.4.2 Where sprinkler spacing exceeds 8 ft (2.4 m) measured perpendicular to the slope, the minimum sprinkler discharge pressure shall be 20 psi (1.4 bar).

19.4.3.4.3 Hose stream allowance and water supply duration requirements shall be in accordance with those for light hazard occupancies in Table 19.3.3.1.2.

EDUFIRE.IR

19.4.3.5 If a single fire can be expected to operate sprinklers within the water curtain and within the design area of a hydraulically calculated system, the water supply to the water curtain shall be added to the water demand of the hydraulic calculations and shall be balanced to the calculated area demand.

19.4.4 Sprinkler-Protected Glazing. Where the sprinkler-protected glazing is required to comply with 9.3.15, the water supply duration for the design area that includes the window sprinklers shall be not less than the required rating of the assembly.

N **19.4.4.1** For sprinkler-protected glazing, the number of sprinklers calculated for the glazing shall be the number in the length corresponding to the length parallel to the branch lines in the area determined by 27.2.4.2.

N **19.4.4.2** If a single fire can be expected to operate sprinklers for the sprinkler-protected glazing and within the design area of a hydraulically calculated system, the water supply to the sprinkler-protected glazing shall be added to the water demand of the hydraulic calculations and shall be balanced to the calculated area demand.

N **19.4.4.3** Hydraulic design calculations shall include a design area selected to include ceiling sprinklers adjacent to the sprinkler-protected glazing.

19.5 Deluge Systems.

Open sprinkler and deluge systems shall be hydraulically calculated according to applicable standards.

References Cited in Commentary

National Fire Protection Association, 1 Batterymarch Park, Quincy, MA 02169-7471.

NFPA 13D, *Standard for the Installation of Sprinkler Systems in One- and Two-Family Dwellings and Manufactured Homes,* 2019 edition.

NFPA 13R, *Standard for the Installation of Sprinkler Systems in Low-Rise Residential Occupancies,* 2019 edition.

NFPA 14, *Standard for the Installation of Standpipe and Hose Systems,* 2016 edition.

NFPA 415, *Standard on Airport Terminal Buildings, Fueling Ramp Drainage, and Loading Walkways*, 2016 edition.

Fire Protection Research Foundation, 1 Batterymarch Park, Quincy, MA 02169-7471.

"High Volume/Low Speed Fan and Sprinkler Operation — Phase II Research Program," January 2011.

EDUFIRE.IR

EDUFIRE.IR

CHAPTER

20

General Requirements for Storage

REORGANIZATION NOTE

The new Chapter 20 has been arranged to provide the basic rules that apply to all storage occupancies, except for miscellaneous storage and low-piled storage, which are covered in Chapter 4. Chapter 20 replaces the old Chapter 12 and includes more storage information, such as the steps of protection, commodity classification, and many of the definitions that contain compliance criteria.

Chapter 20 is arranged with the following subsections, including a description of what they address:

- 20.1: Scope of Chapter 20
- 20.2: How to use Chapter 20
- 20.3: Determining commodity classification
- 20.4: The different commodity classes
- 20.5: The different types of storage arrangements
- 20.6: Construction and storage features that could affect protection requirements (e.g., ceiling slope, clearance between top of storage and ceiling
- 20.7: Unsprinklered combustible concealed spaces
- 20.8: Room design method
- 20.9: Information regarding high-expansion foam systems
- 20.10: Adjacent hazards or design methods
- 20.11: Information regarding small hose connections
- 20.12: Determining required hose stream allowance and sprinkler system water supply duration
- 20.13: General information on design considerations
- 20.14: How to protect the storage of idle pallets
- 20.15: Information on steel column protection

The other storage chapters of NFPA 13 apply to specific sprinkler arrangements as follows:

- Chapter 21: Protection of High Piled Storage Using Control Mode Density Area (CMDA) Sprinklers
- Chapter 22: CMSA Requirements for Storage Applications
- Chapter 23: ESFR Requirements for Storage Applications
- Chapter 24: Alternative Sprinkler System Designs for Chapters 20 Through 25
- Chapter 25: Protection of Rack Storage Using In-Rack Sprinklers

Chapters 21 through 24 provide ceiling-only protection requirements; protection options utilizing in-rack sprinklers are found in Chapter 25. Chapter 24 provides additional protection options to the ones provided in Chapters 21 through 23 and Chapter 25. Chapter 25 provides requirements for both ceiling and in-rack sprinkler systems. When a sprinkler protection option that uses in-rack sprinklers has been chosen, all the information needed for the design of both the ceiling and the in-rack sprinkler system can be found in Chapter 25.

Note that the protection options provided in Chapter 24, as well as those in Sections 21.9 through 21.12 and Sections 23.10 through 23.12, contain special arrangements of sprinklers that have been tested to protect the commodity described, provided they are installed in accordance with the requirements in the previously mentioned sections. However, once special sprinkler arrangements have been selected as

EDUFIRE.IR

a design option, those rules must be followed to meet the standard. For example, if an owner or a tenant is protecting shelf storage of Group A plastics in accordance with Chapter 21 (other than Section 21.9), the discharge criteria in Section 21.9 are not required to be followed. The reverse is also true: If the criteria in Section 21.9 for shelf storage of Group A plastics are followed, then it is not necessary to follow the rules in Chapter 21 that do not apply to Section 21.9.

CLOSER LOOK

Using Chapter 20 to Determine Storage Protection

For the protection of any storage occupancy, the intent of NFPA 13 is for the user to start with Chapter 20 and determine the general rules that apply. Then, the user is to go to the appropriate chapter (Chapter 21 to Chapter 25) for the commodity and storage arrangement being protected to get the rest of the discharge criteria.

In general, the protection rules in Chapter 20 through Chapter 25 are designed to answer four basic questions, assuming that a fire is going to start in the occupancy:

1. What is a reasonable estimate of the flow that will be needed for the sprinkler system? (This includes consideration for the number of sprinklers that might open in a fire and the flow that will be used for fire department operations to extinguish the fire upon their arrival.)
2. At what pressure does that flow need to be available?
3. How long will the flow need to last?
4. If the storage is on racks, do sprinklers need to be placed in the racks, or can the storage be protected by sprinklers only at the ceiling?

When NFPA 13 is selected as the document to provide requirements for protecting occupancies from fire with sprinklers, it is important to follow all the requirements of NFPA 13. The user is discouraged from picking selected requirements from other documents and trying to use them with NFPA 13 because the fundamental assumptions that went into selected requirements from other documents might not be valid with NFPA 13. Users who want to select sprinkler design criteria from another standard are encouraged to use that standard in its entirety, including any additional standards referenced by that standard. The authority having jurisdiction is permitted to review the other set of standards and determine whether or not (as a package) it meets the same level of safety as that prescribed by NFPA 13. If the authority having jurisdiction is convinced that the other set of standards is sufficient, then that set of standards can be permitted to be used under Section 1.5 and Section 1.6 of NFPA 13 as an alternative that meets the same level of safety as NFPA 13.

While the storage chapters of NFPA 13 can seem daunting at first, they become easier to navigate once the pertinent information for a given facility is identified. For most storage facilities, only a few dozen individual sections of the standard are applicable. The trick is being able to identify which sections apply to a given storage arrangement and which ones can be ignored. That is done by finding the correct sections in each chapter to jump to after the requirements of Chapter 20 have been addressed and the pertinent information has been identified. This information should be identified by the designer prior to searching through the various storage chapters (Chapter 21 through 25) since that information will confine the search to only the pertinent chapters and sections. After the commodity classification and the storage arrangement have been identified, the next step is to determine what ceiling-only options, if any, apply from Chapters 21 through 24 followed by what ceiling and in-rack options are available from Chapter 25.

Exhibit 20.1 is a checklist that should be used prior to navigating through the individual storage chapters of NFPA 13. Once the information has been identified on the form, finding an applicable design approach becomes much simpler. Many designers simply take the commodity class and storage type (rack, piled, etc.) and head into the storage design chapters looking for guidance. While this is certainly one approach, it is like starting to cook dinner without first checking to see what ingredients you need. With this approach, you might have to replan or reassess once you realize that you do not have the ingredients you need to finish the meal. Failing to identify critical information such as storage height, clearance, storage arrangement, and ceiling height can lead to headaches later in the design process if they are not factored into the design decision up front. All the information in Exhibit 20.1 is needed to achieve an allowable design option, so it is helpful to start with this form.

Once Exhibit 20.1 is filled out, the designer can start to make the make the process more manageable by finding the applicable design chapter. Other useful tools are the workflows in Exhibit 20.2 through Exhibit 20.4, which provide a series of questions and answers in the form of flowcharts to help designers figure out to which storage chapter and sections they should be referring. The workflows also provide guidance to the designer if the parameters of the project are outside the scope of NFPA 13. For example, if the ceiling slope is too high or if open-top containers are being used, the exhibits provide a warning to users that they might need to get an equivalency since the information provided is not within the scope of NFPA 13.

Using the flowcharts requires the completion of the checklist in Exhibit 20.1 or some way to record the pertinent information from the checklist. The first branch of the flowchart requires the designer to identify the commodity class. Using the class identified in the storage checklist, including any pallet modifiers, the designer can then go on to answer the other questions.

EDUFIRE.IR

NFPA 13 STORAGE SPRINKLER SYSTEM DESIGN

Commodity class: ☐ Class I ☐ Class II ☐ Class III ☐ Class IV

(See Section 20.4) ☐ Group A plastic ☐ Group B plastic ☐ Group C plastic

Pallet type (20.3.2): ☐ Wood pallet (no class modification)

☐ Unreinforced plastic pallet (one class modification)

☐ Reinforced plastic pallet (two class modification)

Storage arrangement:

☐ Rack ☐ Shelf storage ☐ Back-to-back shelf ☐ Solid pile ☐ Palletized ☐ Bin box

For Rack Storage:

Rack type: ☐ Single-row rack ☐ Double-row rack ☐ Multiple-row rack

Shelf type: ☐ Open rack ☐ Solid shelving ☐ Slatted shelf rack ☐ Solid shelf rack

Determine ceiling height (20.6.2): _____

Storage height:

☐ From floor (20.6.3): _____

☐ Clearance to sprinkler minimum (9.5.6): _____

☐ Clearance to ceiling (20.6.4): _____

Storage arrangement (20.5): _____

Miscellaneous storage (3.3.124): ☐ Yes ☐ No

☐ Maximum 12 ft (3.7 m)

☐ Incidental to occupancy

☐ Maximum 10 percent or 4000 ft^2 (372 m^2) of sprinklered area

☐ Maximum 1000 ft^2 (93 m^2) pile

☐ 25 ft (7.6 m) separation

Other considerations that may impact NFPA 13 design options:

☐ Smoke vents ☐ Draft curtains ☐ HVLS fans ☐ Slope exceeding 2:12

☐ Excessive clearances ☐ Open top containers ☐ Flammable/combustible liquids

© 2018 National Fire Protection Association NFPA 13

EXHIBIT 20.1 *NFPA 13 Storage Sprinkler System Design Checklist.*

EDUFIRE.IR

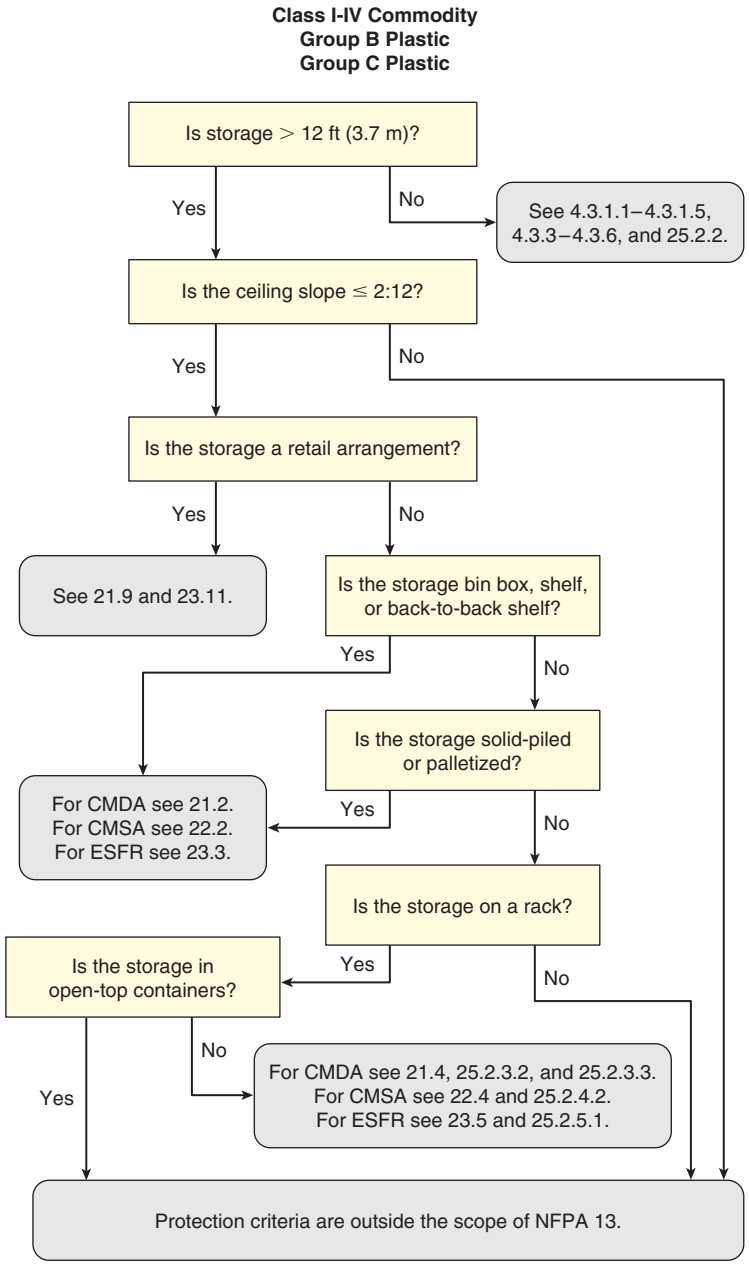

EXHIBIT 20.2 *Storage Workflow for Class I–IV Commodities.*

EDUFIRE.IR

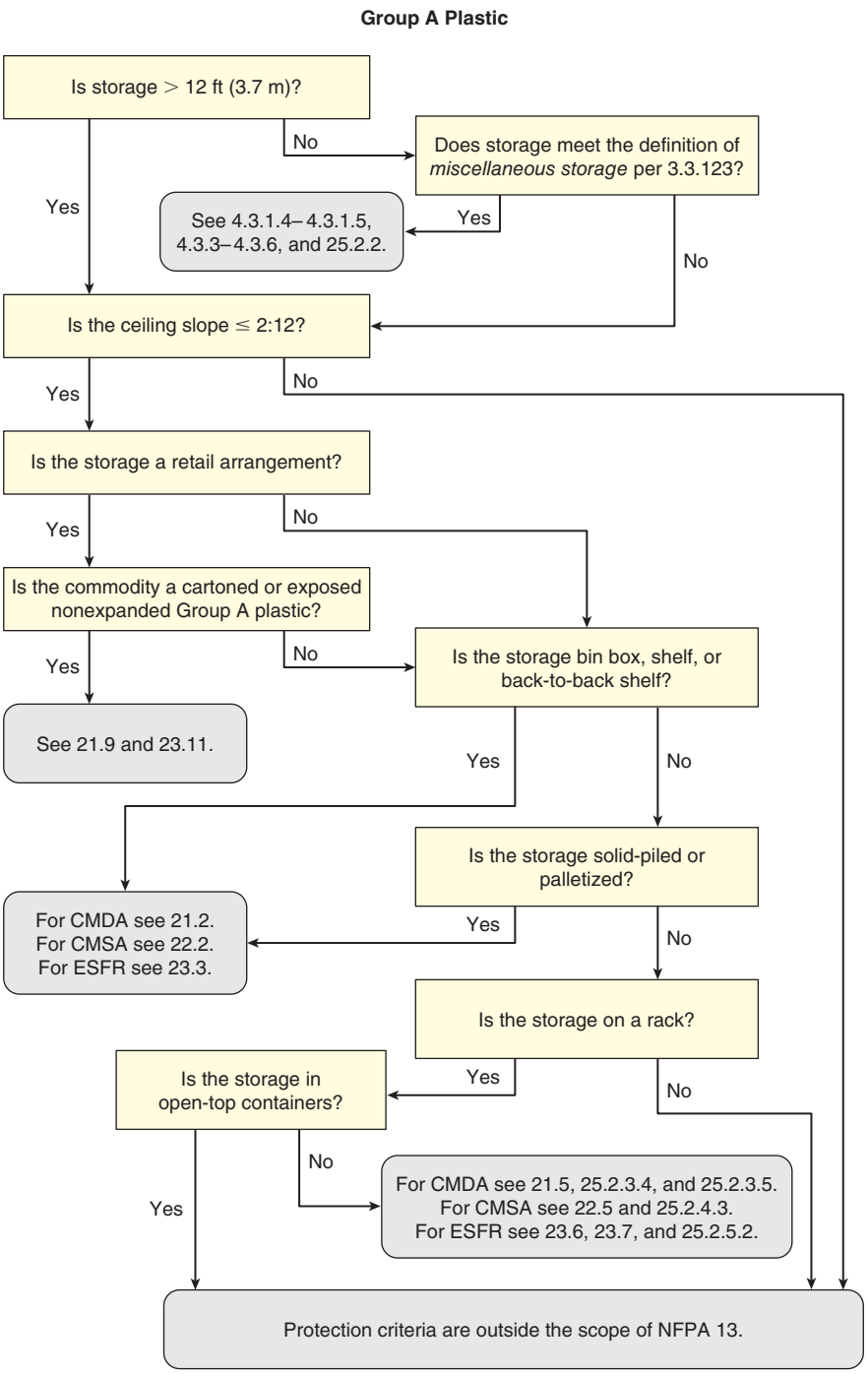

EXHIBIT 20.3 *Storage Workflow for Group A Plastic Commodities.*

EDUFIRE.IR

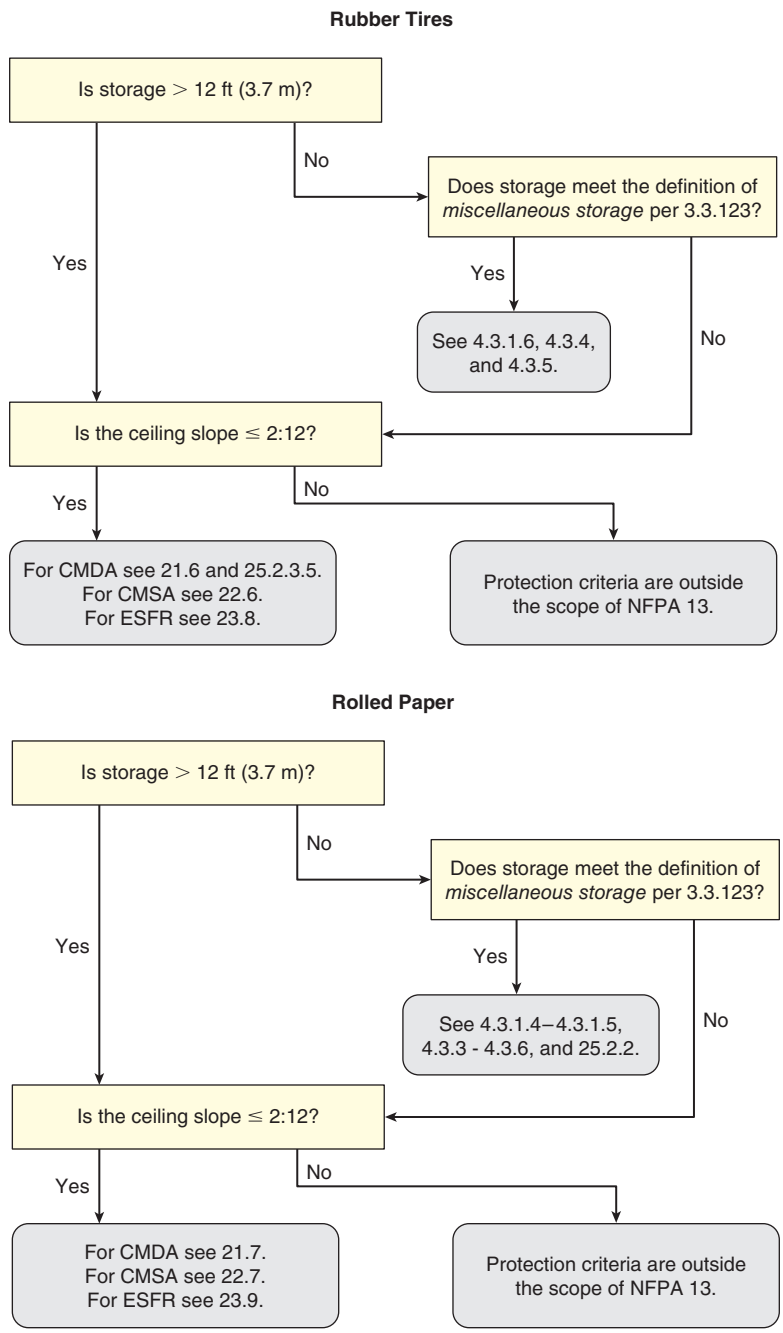

EXHIBIT 20.4 *Storage Workflow for Rubber Tire and Roll Paper Commodities.*

FAQ [20.1]

Why was Chapter 20 written to apply to all storage arrangements?

Rather than repeat all the general rules that apply to all storage situations, the rules have been consolidated in one location so that they are easily found and uniformly enforced. If the rules were repeated in multiple chapters, they might be more difficult to find, and they unintentionally might be modified by the technical committee in one chapter while left alone or modified in a different way in another chapter. *N*

20.1 General.

This chapter shall provide the necessary steps for identifying commodity, storage arrangements, storage heights, and clearances as well as general protection criteria for storage conditions relative to Chapters 21 through 25.

EDUFIRE.IR

The rules of Chapter 20 apply to all storage occupancies, except those in 4.3.1.4 through 4.3.1.6 and 25.2.2. When planning a sprinkler system for a storage or warehouse occupancy, the user needs to make sure that all the rules of Chapter 20 are followed in addition to the applicable requirements of Chapter 21 through Chapter 25.

N **20.1.1** Miscellaneous and low-piled storage, meeting the criteria of Chapter 4, shall be protected in accordance with the relative occupancy hazard criteria reference in that section.

FAQ [20.1]

Why are systems designed in accordance with 4.3.1.4 through 4.3.1.6 and 25.2.2 exempt from the requirements of Chapter 20?

Sprinkler systems that protect miscellaneous storage or low-piled storage have more in common with ordinary hazard or extra hazard occupancies than they do with storage occupancies. Fires in those occupancies do not generate the same kind of forceful vertical fire plumes that can be found in other storage occupancies. Therefore, the discharge criteria for systems designed in accordance with 4.3.1.4 through 4.3.1.6 and 25.2.2 ultimately revert to criteria in 4.3.3 through 4.3.6 for ordinary or extra hazard systems; the more stringent criteria found in Chapter 20 do not apply.

N 20.2 Protection of Storage.

Protection of storage shall follow the following criteria:

(1) Identify the storage commodity class in accordance with Sections 20.3 and 20.4.
(2) Identify the method of storage in accordance with Section 20.5.
(3) Establish storage height, building height, and associated clearances in accordance with Section 20.6.
(4) Define the general protection criteria that are common to all storage protection options in accordance with Sections 20.7 through 20.15.
(5) Select the appropriate system/sprinkler technology for protection criteria (Chapters 21 through 25).
(6) Design and install system in accordance with the remainder of this document.

20.3* Classification of Commodities.

C.2 [20.3] A review of full-scale fire tests run on the standard commodity (double tri-wall carton with metal liner), of Hallmark products and 3M products (e.g., abrasives, pressure-sensitive tapes of plastic fiber, and paper), and of the considerable number of commodity tests conducted provides a guide for commodity classifications. Such guidance is not related to any other method of classification of materials; therefore, sound engineering judgment and analysis of the commodity and the packaging should be used when selecting a commodity classification.

The commodity classifications covered in Section 20.3 form the basis of the design and installation criteria of NFPA 13. The commodity classifications provide a convenient means of categorizing a relationship between the chemical heat of combustion of various materials and their heat release rate so that the appropriate sprinkler system design can be identified. The likelihood of ignition is not considered in the commodity classifications.

Protection standards for stored commodities are based on testing that primarily involves the Standard Class II and cartoned, nonexpanded plastic test commodities. The Standard Class II test commodity is a double triwall corrugated cardboard carton with a metal liner on a wood pallet, as shown in image (a) of Exhibit 20.5. The cartoned, nonexpanded plastic test commodity is polystyrene cups in a compartmented corrugated cardboard carton on a wood pallet, as shown in image (b) of Exhibit 20.5.

Protection for Class I, Class III, and Class IV commodities is based on limited testing and extrapolation from testing with the standard test commodity. (No Class I tests, two Class III tests, and two Class IV tests were done.)

With the introduction of early suppression fast-response (ESFR) sprinklers in the late 1980s, protection for cartoned expanded Group A plastics, as well as exposed nonexpanded and exposed expanded Group A plastics, has been based on test commodities representing each of those category listings. The cartoned, expanded plastic test commodity is foam meat trays in a corrugated cardboard container on a wood pallet, as shown in image (c) of Exhibit 20.5. The exposed, nonexpanded plastic test commodity consists of seven gridded, non-listed plastic pallets on a wood pallet, as shown in image (d) of Exhibit 20.5. The exposed, expanded plastic test commodity consists of plastic-wrapped foam meat trays stacked on a wood pallet, as shown in image (e) of the exhibit.

EDUFIRE.IR

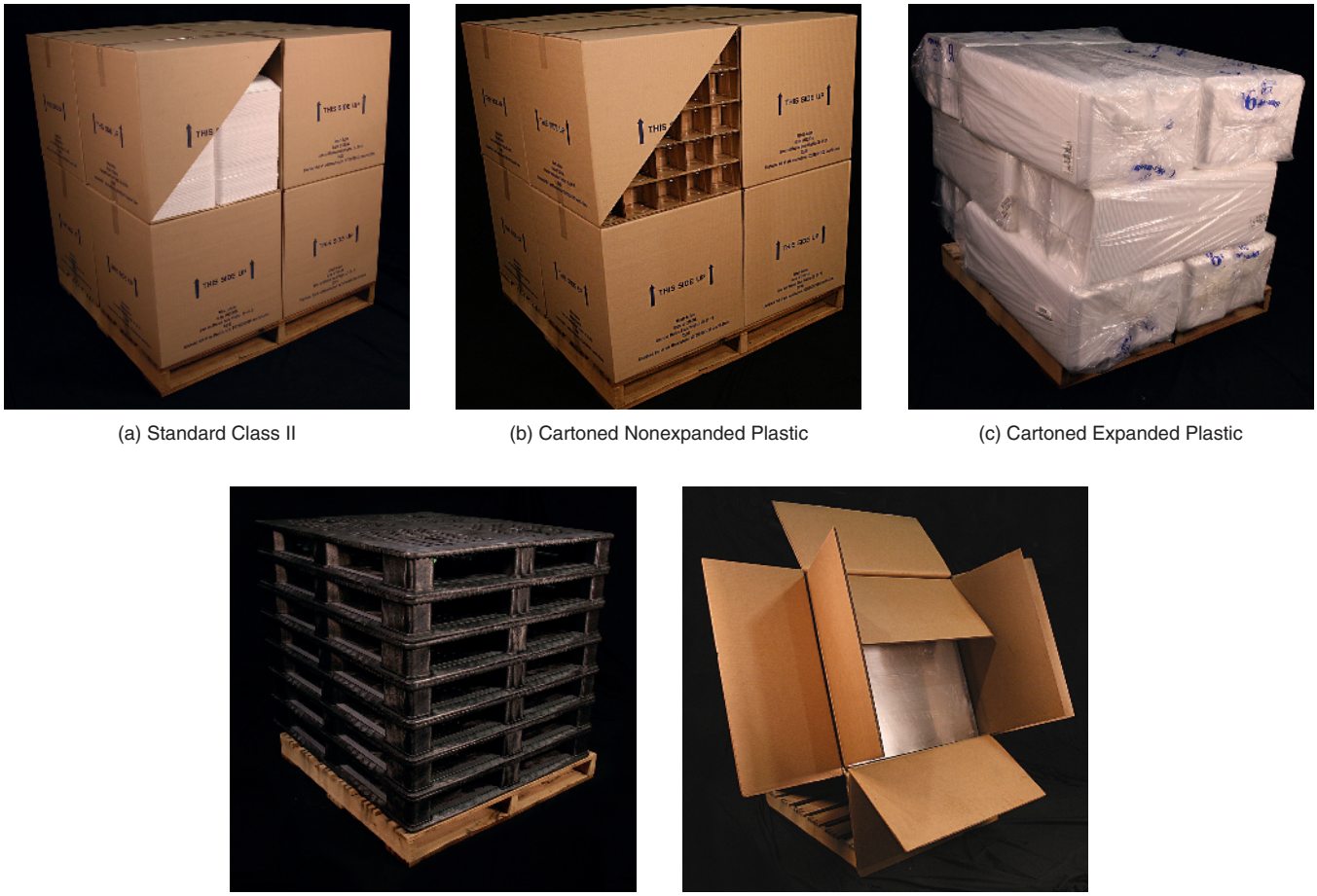

(a) Standard Class II (b) Cartoned Nonexpanded Plastic (c) Cartoned Expanded Plastic

(d) Exposed Nonexpanded Plastic (e) Exposed Expanded Plastic

EXHIBIT 20.5 *Test Commodities. (Courtesy of FM Global)*

Classification of actual commodities is based primarily on comparison of the commodity to the definitions for the various commodity classes. Commodity classification can also be done by testing, but it is important that such testing involve sprinklers or some other method to simulate water application by sprinklers and be large enough in scale to produce meaningful results.

Where commodities are not currently defined, commodity classification testing can provide an accurate comparison between the proposed commodity and known commodity classifications. Such testing is essential for determining acceptable sprinkler design criteria for new or unknown commodities where a meaningful comparison cannot be made between the given commodity and other known commodity classifications. Bench-scale testing is not useful for making precise commodity classifications.

The classification of the commodity is the first major decision that is made in the design of the sprinkler system and can have a huge effect on the effectiveness of the system during a fire. When the storage commodity has been improperly classified, a sprinkler system's capability to control a fire in a warehouse environment can be compromised, allowing for unabated horizontal spread.

Although NFPA 13 offers guidelines on how to determine commodity classification, there are certain aspects of the process that can be challenging and possibly overlooked, leading to an incorrect commodity listing. The Technical Committee on Sprinkler Discharge made several modifications to Section 20.3 and A.20.3 in the 2016 edition in an effort to clarify and simplify the process of determining commodity classification. The process is indicated in the flowchart shown in Exhibit 20.6.

EDUFIRE.IR

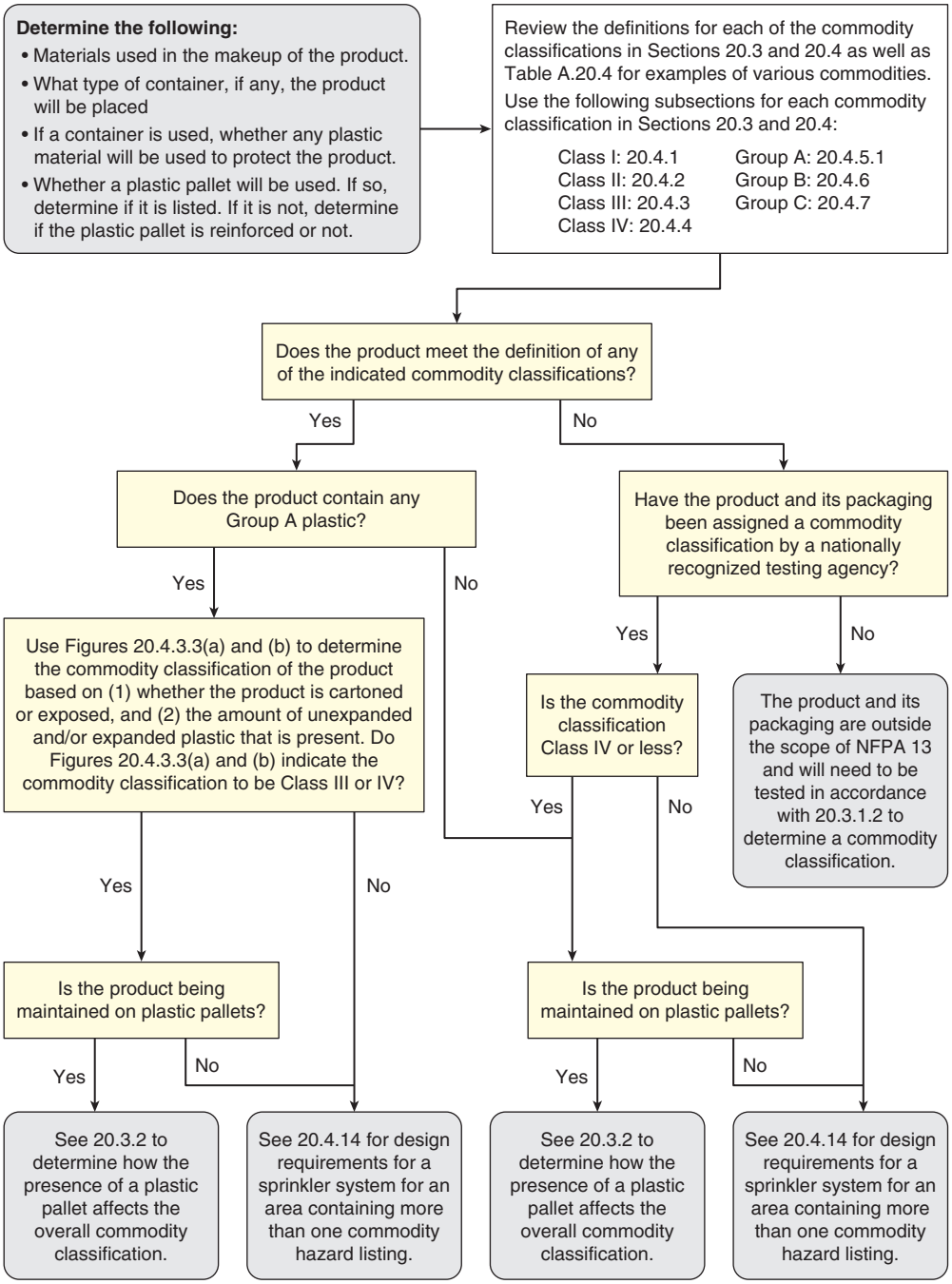

EXHIBIT 20.6 *General Flowchart for Determining Commodity Classification.*

A.20.3 Commodity classification is governed by the types and amounts of materials (e.g., metal, paper, wood, plastics) that are a part of a product and its primary packaging. Consideration of all characteristics of the individual storage units, not just the product, is critical to identify the appropriate commodity classification. Refer to Table A.20.3 for general guidance for classifying commodities. For situations where it is difficult to determine the appropriate classification, testing should be considered to appropriately characterize the commodity.

EDUFIRE.IR

TABLE A.20.3 *General Guide to Identifying the Commodity Class for Solid Combustibles*

Characteristics of Unit Load			
Material Used to Construct Product	***Packaging Material***	***Pallet Material***	***Commodity Class***
Noncombustible Product			
Entirely noncombustible	None or single-layer corrugated cartons	None, metal, or wood	Class I
Entirely noncombustible	None or single-layer corrugated cartons	Plastic	Class I, II, or III; see 20.3.2
Entirely noncombustible	Multiple-layered corrugated cartons, wooden crates, or wood boxes	None, metal, or wood	Class II
Entirely noncombustible	Multiple-layered corrugated cartons, wooden crates, or wood boxes	Plastic	Class II, III, or IV; see 20.3.2
Entirely noncombustible	Corrugated cartons, wooden crates, or wood boxes, with internal plastic packaging	None, metal, or wood	See Figure 20.4.3.3(a)
Entirely noncombustible	Corrugated cartons, wooden crates, or wooden boxes, with internal plastic packaging	Plastic	See 20.3.2 and Figure 20.4.3.3(a)
Wood, Paper, Natural Fibers, or Group C Plastics			
Entirely wood, paper, natural fibers, or Group C plastics, or a mix of these with noncombustible materials	None, corrugated cartons, wooden crates, or wood boxes	None, metal, or wood	Class III
Entirely wood, paper, natural fibers, or Group C plastics, or a mix of these with noncombustible materials	Corrugated cartons, wooden crates, or wood boxes, with internal plastic packaging	None, metal, or wood	See Figure 20.4.3.3(a)
Entirely wood, paper, natural fibers, or Group C plastics, or a mix of these with noncombustible materials	None, corrugated cartons, wooden crates, or wood boxes	Plastic	Class III or IV or cartoned nonexpanded Group A plastic; see 20.3.2
Entirely wood, paper, natural fibers, or Group C plastics, or a mix of these with noncombustible materials	Corrugated cartons, wooden crates, or wood boxes, with internal plastic packaging	Plastic	See 20.3.2 and Figure 20.4.3.3(a)
Group B Plastics			
Entirely Group B plastics, or a mix of these with noncombustible, wood, paper, natural fibers, or Group C plastics materials	None, corrugated cartons, wooden crates, or wood boxes	None, metal, or wood	Class IV
Entirely Group B plastics, or a mix of these with noncombustible, wood, paper, natural fibers, or Group C plastics materials	Corrugated cartons, wooden crates, or wood boxes	Plastic	Class IV or cartoned nonexpanded Group A plastic; see 20.3.2
Entirely Group B plastics, or a mix of these with noncombustible, wood, paper, natural fibers, or Group C plastics materials	None	Plastic	Class IV or cartoned nonexpanded Group A plastic; see 20.3.2
Entirely Group B plastics, or a mix of these with noncombustible, wood, paper, natural fibers, or Group C plastics materials	Corrugated cartons, wooden crates, or wood boxes, with plastic internal packaging	None, metal, or wood	See Figure 20.4.3.3(a)
Entirely Group B plastics, or a mix of these with noncombustible, wood, paper, natural fibers, or Group C plastics materials	Corrugated cartons, wooden crates, or wood boxes, with plastic internal packaging	Plastic	See 20.3.2 and Figure 20.4.3.3(a)

EDUFIRE.IR

TABLE A.20.3 Continued

Characteristics of Unit Load			
Material Used to Construct Product	*Packaging Material*	*Pallet Material*	*Commodity Class*
Group A Plastics			
Free-flowing Group A plastic materials	Corrugated cartons, wooden crates, wood boxes, or bagged	None, metal, wood	Class IV
Free-flowing Group A plastic materials	Corrugated cartons, wooden crates, wood boxes, or bagged	Plastic	Class IV or cartoned nonexpanded Group A plastic; see 20.3.2
Entirely nonexpanded Group A plastic	Corrugated cartons, wooden crates, or wood boxes	None, metal, wood, or plastic	Cartoned nonexpanded Group A plastic
Entirely nonexpanded Group A plastic	None	None, metal, wood, or plastic	Exposed nonexpanded Group A plastic
Entirely nonexpanded Group A plastic	Corrugated cartons, wooden crates, or wood boxes, with internal plastic packaging	None, metal, wood, or plastic	See Figure 20.4.3.3(a)
Entirely expanded Group A plastic	Corrugated cartons, wooden crates, or wood boxes, with or without internal plastic packaging	None, metal, wood, or plastic	Cartoned expanded Group A plastic
Entirely expanded Group A plastic	None	None, metal, wood, or plastic	Exposed expanded Group A plastic
Mix of Group A plastics, noncombustible, wood, paper, natural fibers, Group B or C plastics materials	Corrugated cartons, wooden crates, or wood boxes, with or without internal plastic packaging	None, metal, or wood	See Figure 20.4.3.3(a)
Mix of Group A plastics, noncombustible, wood, paper, natural fibers, Group B or C plastics materials	Corrugated cartons, wooden crates, or wood boxes	Plastic	See 20.3.2 and Figure 20.4.3.3(a)
Mix of Group A plastics, noncombustible, wood, paper, natural fibers, Group B or C plastics materials	None	None, metal, or wood	See Figure 20.4.3.3(b)
Mix of Group A plastics, noncombustible, wood, paper, natural fibers, Group B or C plastics materials	None	Plastic	See 20.3.2 and Figure 20.4.3.3(b)

Note: This table provides guidance for the general characteristics to be considered in classifying a commodity. The additional commodity classification information included in this standard as well as any relevant test data that is available should be considered in identifying the appropriate classification.

The Technical Committee on Sprinkler Systems Discharge revised A.20.3 in the 2016 edition to stress the importance of considering all the characteristics of the pallet load making up the commodity for determining the commodity classification, not just the product alone as listed in Table A.20.4. To assist in that evaluation, Table A.20.3 was created to provide general guidance to the user on the classification of a commodity, taking into consideration not only the materials used for the product but also the materials that are part of the product's packaging (container and any internal packaging used for protecting the product during transportation) and handling (e.g. , pallet).

EDUFIRE.IR

DESIGNER'S CORNER [20.3]

How would a designer classify a storage commodity such as athletic shoes, which might be part plastic and part ordinary combustibles?

Similar to the discussion regarding the importance of having a design professional make the determination of hazard classification, the same concern exists for storage commodity classification. Since there is specific direction given by other NFPA technical committees on this subject, the responsible design professional is encouraged to investigate the materials used to make the athletic shoes. In the past, shoes were made of leather, cotton, and/or canvas, which are natural materials, making a Class III commodity designation likely. However, shoes are now made from many different materials, so the materials need to be investigated.

If the shoes are primarily made of any of the materials listed in 20.4.5.1, then they are considered Group A plastics and need to be protected as such. The commodity classification is further complicated by having to make a determination of the plastic and whether it is expanded. An expanded plastic — for example, packing peanuts — has air blown into the material during manufacturing, which makes the product much more difficult to extinguish during a fire because the oxygen for combustion is already a part of the fuel package.

If the shoe is made with a combination of natural materials and plastic, then 20.4.3, 20.4.4, and 20.4.5 should be used to determine whether the product can be protected as a Class III or a Class IV commodity or as a Group A plastic. To determine the appropriate classification, it is important to quantify the mass and volume of the plastic that makes up the commodity. These values should be used in conjunction with either Figure 20.4.3.3(a) or Figure 20.4.3.3(b), depending on whether the commodity is cartoned or exposed, to come up with the appropriate classification.

A great deal of effort goes into making the decision between Group A plastics and Class IV commodities, but often that effort does not yield a huge benefit. The protection criteria for Class IV commodities and Group A plastics are very similar in many cases. It might be better to just classify the material as a Group A plastic and save the effort of trying to justify a Class IV commodity designation. This also will provide more flexibility for the building owner if the decision is made later to change the commodity.

Sneakers with Mixed Plastic and Natural Materials. (© Shutterstock.com/Brian A. Jackson)

20.3.1* Commodity classification and the corresponding protection requirements shall be determined based on the makeup of individual storage units.

N **A.20.3.1** Unit loads and pallet loads are examples of individual storage units.

20.3.1.1 The type and amount of materials used as part of the product and its primary packaging as well as the storage pallet shall be considered in the classification of the commodity.

20.3.1.2 When specific test data of commodity classification by a nationally recognized testing agency are available, the data shall be permitted to be used in determining classification of commodities.

One of the main reasons that specific test data are required to determine the commodity classification of a new or unknown commodity is that current engineering analyses are incapable of defining sprinkler suppression characteristics.

EDUFIRE.IR

CLOSER LOOK [20.3]

Commodity Classification Testing

Commodities are ever changing and increasing in number, and materials and storage methods are constantly being refined. As information becomes available, NFPA 13 remains committed to updating valid data for commodity classification. As new materials and methods are introduced for which there is no specific guidance in this standard, the commodity class test can be used to rank the material load into one of seven commodity classifications:

1. Class I
2. Class 2
3. Class 3
4. Class 4
5. Cartoned Group B unexpanded plastic
6. Cartoned Group A unexpanded plastic
7. Cartoned Group A expanded plastic

The commodity class test is performed at a recognized laboratory to rank the product against known commodities used in baseline testing. Underwriters Laboratory is one such laboratory that uses moderate scale tests to determine the mean total rank values of a product by completing the following:

1. Burning the commodity with standardized water applications
2. Determining the resulting heat release rate (HRR)
3. Ranking the hazard for the appropriate suppression design

Testing includes three fire tests of eight pallet loads under a cone calorimeter hood using different water application rates to establish four measurements of average energy release. (See the following exhibits.)

The four parameters for the tests are defined as follows:

1. **V1:** Maximum 1-minute average of the total heat release rate
2. **V2:** Maximum 1-minute average of the convective heat release rate

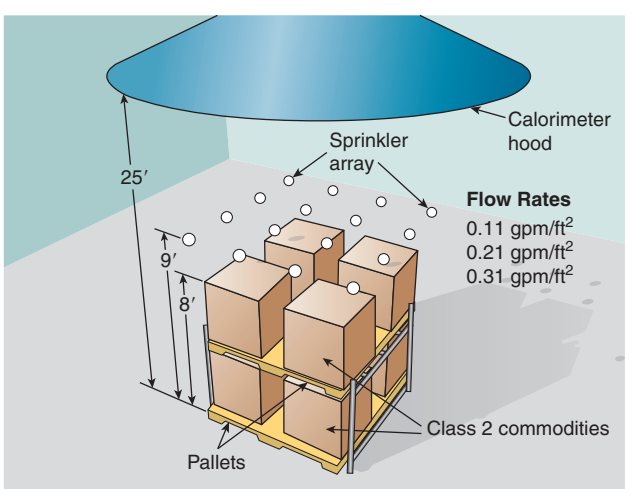

Test Arrangement Diagram of Sprinkler Protection of Eight Pallet Loads. (Courtesy of UL)

Photo of Sprinkler Protection Test of Eight Pallet Loads. (Courtesy of UL)

3. **V3:** Effective convective heat release rate, defined as the average convective heat release rate measured over 5 minutes of the most intense fire
4. **V4:** Convective energy, defined as the total convective energy measured over 10 minutes of the most severe burning

These values are used to establish the mean total rank for the commodity. The mean total rank is compared with those ranks known as standard commodities to establish the equivalent commodity classification. (See the table below.) The ability to test provides a service to establish the correct commodity classification for products not yet covered in NFPA 13.

Commodity Class Designations for Mean Total Rank Values

Mean Total Rank	*Commodity Class*	*Rank*
Less than 1.5	I	1
Equal to or greater than 1.5 but less than 2.5	II	2
Equal to or greater than 2.5 but less than 3.5	III	3
Equal to or greater than 3.5 but less than 4.5	IV	4
Equal to or greater than 4.5 but less than 5.5	Cartoned Group B unexpanded plastic	5
Equal to or greater than 5.5 but less than 6.5	Cartoned Group A unexpanded plastic	6
Equal to or greater than 6.5 but less than 7.0	Cartoned Group A expanded plastic	7

EDUFIRE.IR

20.3.2 Pallet Types.

20.3.2.1 General. When loads are palletized, the use of wood or metal pallets, or listed pallets equivalent to wood, shall be assumed in the classification of commodities.

N **20.3.2.2 Plastic Pallet.** A pallet having any portion of its construction consisting of a plastic material that has not been listed as equivalent to wood shall increase the class of commodity determined for a storage load in accordance with 20.3.2.2.1 or 20.3.2.2.2.

In addition to wood and metal, as described in 20.3.2.1, pallets are constructed of various reinforced and nonreinforced plastics. The effect on the commodity classification of the plastic-type pallets exhibiting different fire characteristics requires consideration. The requirements in 20.3.2.2.1 through 20.3.2.4 reflect the results of available test data regarding this issue. Properly identifying plastic pallets as reinforced or unreinforced can have a significant effect on the hydraulic requirements for sprinkler systems. The use of reinforced plastic pallets requires an increase of two commodity classes, which can affect the amount of water required to meet the intent of the systems. In some cases, an increase in commodity classification can result in the need for major changes to a facility's proposed fire protection, such as modifications to the sprinkler system itself and/or possible upgrades to the water supply (potential need for a fire pump); therefore, proper classification can have a significant financial impact on a project.

Test results from two series of UL tests provided relevant input regarding necessary commodity adjustments associated with commodities supported on different types of plastic pallets. The test results indicated a range from no increase in commodity class to as much as a two-class increase, depending on the type of plastic pallet tested. Generally, unreinforced polypropylene or high-density polyethylene plastic pallets exhibited a one-class increase in commodity classification. Reinforced polypropylene or high-density polyethylene plastic pallets demonstrated up to a two-class increase.

20.3.2.2.1* Unreinforced Plastic Pallets. Plastic pallets that have no secondary reinforcing shall be treated as unreinforced plastic pallets.

A.20.3.2.2.1 For example, Class III will become Class IV, and Class IV will become a cartoned nonexpanded Group A plastic commodity.

N **20.3.2.2.1.1** For Class I through Class IV commodities, when unreinforced polypropylene or unreinforced high-density polyethylene plastic pallets are used, the classification of the commodity unit shall be increased one class.

20.3.2.2.1.2 Unreinforced polypropylene or unreinforced high-density polyethylene plastic pallets shall be marked with a permanent symbol to indicate that the pallet is unreinforced.

N **20.3.2.2.2 Reinforced Plastic Pallet.** A plastic pallet incorporating a secondary reinforcing material (such as steel or fiberglass) within the pallet shall be considered a reinforced plastic pallet.

20.3.2.2.2.1* For Class I through Class IV commodities, when reinforced polypropylene or reinforced high-density polyethylene plastic pallets are used, the classification of the commodity unit shall be increased two classes except for Class IV commodity, which shall be increased to a cartoned nonexpanded Group A plastic commodity.

A.20.3.2.2.2.1 For example, Class II will become Class IV, and Class III and Class IV will become a cartoned nonexpanded Group A plastic commodity.

20.3.2.2.2.2 Pallets shall be assumed to be reinforced if no permanent marking or manufacturer's certification of nonreinforcement is provided.

The requirements associated with the effect of the use of plastic pallets on commodity class have been expanded based on available test results. Several types of plastic pallets, including reinforced and unreinforced polypropylene and high-density polyethylene pallets, have been tested using large-scale calorimeter fire testing.

For many pallets, there is no external way to determine if the pallet is reinforced or unreinforced, so 20.3.2.2.2.2 requires that the pallet be assumed to be reinforced. Therefore, a two-commodity

EDUFIRE.IR

increase would be required, unless the pallet has a permanent marking or manufacturer's certification of nonreinforcement.

Exhibit 20.7 illustrates a unreinforced plastic pallet. See also Exhibit 3.20 and Exhibit 3.21 for examples of other plastic pallets.

EXHIBIT 20.7 Unreinforced Plastic Pallet. (Courtesy of ORBIS Corporation)

20.3.2.2.3 No increase in the commodity classification shall be required for Group A plastic commodities stored on plastic pallets.

20.3.2.2.4 For ceiling-only sprinkler protection, the requirements of 20.3.2.2.1 and 20.3.2.2.2.1 shall not apply where plastic pallets are used and where the sprinkler system uses spray sprinklers with a minimum K-factor of K-16.8 (240).

Available full-scale test data for K-16.8 (K-240) sprinklers demonstrated no need for an increase in commodity classification for plastic pallets, as stated in 20.3.2.2.4.

20.3.2.3 The requirements of 20.3.2.2.1 through 20.3.2.4 shall not apply to nonwood pallets that have demonstrated a fire hazard that is equal to or less than wood pallets and are listed as such.

20.3.2.4 For Class I through Class IV commodities stored on plastic pallets when other than wood, metal, or polypropylene or high-density polyethylene plastic pallets are used, the classification of the commodity unit shall be determined by specific testing conducted by a national testing laboratory or shall be increased two classes.

The requirements for adjustments in the commodity classification due to the use of different types of plastic pallets are based on UL 2335, *Standard for Fire Tests of Storage Pallets,* and ANSI/FM 4996, *American National Standard for Classification of Idle Plastic Pallets as Equivalent to Wood Pallets,* large-scale calorimeter tests. Listed plastic pallets are available that exhibit fire performance similar to that of wood pallets in those tests and can be treated as equivalent to wood pallets for commodity classification (see Exhibit 20.8). Actual fire test data from recognized testing laboratories, such as FM Global and UL, should be reviewed and taken into account to determine if any unique design requirements are needed for protecting a specific plastic pallet.

FAQ [20.3.2.4]

Where can plastic pallets be protected as if they were wood pallets?

Paragraph 20.3.2.4 refers to nonwood pallets that have demonstrated a fire hazard that is equal to or less than that of wood pallets. Plastic pallets present a unique challenge for sprinkler protection. Recent studies and product development, along with significant fire testing, have shown that some plastic pallets have been tested and have demonstrated a fire hazard that is equivalent to or less than the fire hazard presented by wood pallets. Plastic pallets meeting those requirements are specifically listed as such.

N **20.3.2.5 Slave Pallet.** Where solid, flat-bottom, combustible pallets are used for rack storage of Class I through IV commodity up to 25 ft (7.6 m) in height in combination with CMDA sprinklers, 21.4.1.4.2 shall apply. *(See Figure A.3.3.147.1.)*

Slave pallets tend to make it more difficult for ceiling sprinklers to achieve fire control. The flat bottoms of slave pallets create a smoother continuity on the underside of the stored product, which promotes a quicker horizontal spread of the flame front beneath the storage materials. Paragraph 20.3.2.5 allows building owners to use slave pallets, but it requires either the sprinkler system to discharge 20 percent more water from the ceiling sprinklers or the use of in-rack sprinklers to help control the fire.

N **20.3.3 Open-Top Container.** A container of any shape that is entirely or partially open on the top and arranged so as to allow for the collection of discharging sprinkler water cascading through the storage array shall be considered outside the protection criteria of rack storage protection outlined in Chapters 21 through 25.

EXHIBIT 20.8 Classified Fire-Retardant Plastic Pallet [40 in. × 48 in. (1.0 m × 1.2 m)] Equivalent to Wood Pallet. (Courtesy of ORBIS Corporation)

C.12 [20.3.3] Fire tests with open-top containers in the upper tier of storage and a portion of the third tier of storage produced an increase in sprinkler operation from 36 to 41 sprinklers and a more pronounced aisle jump and increase in firespread in the main array. The smooth underside of the containers closely approximates fire behavior of slave pallets.

Sufficient test data have not yet been submitted to the NFPA 13 Technical Committee on Sprinkler Systems Discharge to support the inclusion of specific design criteria for the protection of open-top containers. It is important to review and understand the definition of *open-top container* in 3.3.142 and its associated annex material in A.3.3.142. In situations where open-top containers are set in racks, water collects in the containers and does not sufficiently penetrate the racks to control or suppress fires below. However, the following four conditions, described in A.3.3.142, identify where an open-top container should not be considered as such, due to the limited impact on water penetration:

EDUFIRE.IR

1. Containers that have only a small opening in the top, limiting the amount of water collection
2. The storage of open-top containers on the bottom tier of storage since the collection of water within these containers does not prevent water from reaching other combustibles
3. Containers that are sufficiently open along the sides or the bottom to allow for passage of water and prevent collection within the container
4. Containers that are provided with fixed covers above each container that shed water to the available flue spaces rather than collect it within the container

CLOSER LOOK [20.3.3]

Why NFPA 13 Does Not Permit Open-Top Containers

One of the key elements of fire control and suppression in storage occupancies is getting the sprinkler distribution (droplets) to the top of the fuel (storage). Once the distribution reaches the top of the fuel, it collects and cascades down the vertical surfaces, cooling and pre-wetting the commodity to establish control and suppression. However, several factors prevent water from cascading down the vertical surfaces of the commodity, and the open-top container — defined and illustrated below — is one of them.

> **3.3.142*** Open-Top Container. A container of any shape that is entirely or partially open on the top and arranged so as to allow for the collection of discharging sprinkler water cascading through the storage array.

Rack Storage

Open-top containers catch and collect the sprinkler distribution. The obvious problem is that this prevents the cooling and pre-wetting action of the distribution; the less obvious problem is the unanticipated added water weight and the possibility that it might compromise the structural integrity of the rack structure. Section C.12 provides additional information regarding the impact of open-top containers within a storage rack. For that reason, Chapter 20 specifically states that open-top containers are outside the scope of the protection outlined in each chapter, as noted in the following excerpt:

> **20.3.3 Open-Top Container.** A container of any shape that is entirely or partially open on the top and arranged so as to allow for the collection of discharging sprinkler water cascading through the storage array shall be considered outside the protection criteria of rack storage protection outlined in Chapters 21 through 25.

Although not covered by NFPA 13, one method to alleviate the concern for open-top containers is to locate them on the floor level only, not elevated in the rack structure. That way, the collection of water is not a problem because it does not prohibit the wetting of combustibles at a lower elevation, and the additional weight should not be an issue with the floor. ESFR sprinklers specifically exclude open-top containers from all storage methods. Where an NFPA 13 design is required, containers that are significantly open and will not retain water, such as the one shown in the exhibit below, must be used.

Palletized and Solid-Piled Storage

Chapter 21, Chapter 22, and Chapter 24 do not specifically restrict the use of open-top containers with control mode density/area (CMDA) and control mode specific application (CMSA) sprinklers for palletized and solid-piled storage. Where the stacks are located on the floor, the weight and collapse issue is not as great a concern. Vertical stacking is less likely to fill lower containers than rack storage with less clearance between the bottom and the top of containers in the stack. Because the possibility of the top layer collecting water is still present, however, Chapter 21, Chapter 22, and Chapter 24 generally require larger design areas for CMDA and CMSA sprinklers.

Open-Top Containers. (©Shutterstock.com/Rigucci)

Container That Will Not Collect Water. (©Shutterstock.com/George.S.V)

EDUFIRE.IR

N **20.3.4 Solid Unit Load of Nonexpanded Plastic (Either Cartoned or Exposed).** A load that does not have voids (air) within the load and that burns only on the exterior of the load and that water from sprinklers will reach most surfaces available to burn shall allow a reduction in design density of CMDA sprinklers. *[See Table 21.3.3(a).]*

20.4* Commodity Classes.

N **A.20.4** Specification of the type, amount, and arrangement of combustibles for any commodity classification is essentially an attempt to define the potential fire severity, based on its burning characteristics, so the fire can be successfully controlled by the prescribed sprinkler protection for the commodity class. In actual storage situations, however, many storage arrays do not fit precisely into one of the fundamental classifications; therefore, the user needs to make judgments after comparing each classification to the existing storage conditions. Storage arrays consist of thousands of products, which makes it impossible to specify all the acceptable variations for any class. As an alternative, a variety of common products are classified in this annex based on judgment, loss experience, and fire test results.

Table A.20.4(a) provides examples of commodities not addressed by the classifications in Section 20.4. The commodities listed in Table A.20.4(a) are outside the scope of NFPA 13 protection.

Table A.20.4(a) includes lithium ion batteries. Lithium ion batteries have been a research project within the NFPA Research Foundation. As a result, the following reports have been published:

(1) *Lithium Ion Batteries Hazard and Use Assessment*, published July 2011 and available at the NFPA Research Foundation web site.
(2) *Flammability Characterization of Lithium-ion Batteries in Bulk Storage*, published March 2013 and available at www.fmglobal.com/researchreports.
(3) *Lithium Ion Batteries Hazard and Use Assessment Phase IIB, Flammability Characterization of Li-ion Batteries for Storage Protection*, published April 2013 and available at the NFPA Research Foundation web site.
(4) *Lithium Ion Batteries Hazard and Use Assessment — Phase III*, published November 2016 and available at the NFPA Research Foundation web site.

Table A.20.4(b) is an alphabetized list of commodities with corresponding classifications.

Table A.20.4.1, Table A.20.4.2, Table A.20.4.3, Table A.20.4.4, and Table A.20.4.5.1 provide examples of commodities within a specific class.

For the 2016 edition, the Technical Committee on Sprinkler System Discharge reformatted what is now Table A.20.4(b). The commodities previously listed in Table A.20.4(b) were reviewed and alphabetized under a grouping indicated as the "Product Heading." The previous heading of "Commodity" was changed to "Product," and those items are also alphabetized. Further, products indicated as Group A are listed as either "Expanded" or "Nonexpanded" if the physical state of the plastic is inconsequential. If a product is listed simply as "Group A Plastic" and is not indicated as either "Expanded" or "Nonexpanded," then the physical state of the plastic determines whether to treat it as expanded or nonexpanded. Table A.20.4.1, Table A.20.4.2, Table A.20.4.3, Table A.20.4.4, and Table A.20.4.5.1 were all modified to incorporate this new format.

The Technical Committee on Sprinkler System Discharge conducted a thorough review of all the commodities previously listed in what is now Table A.20.4 as well as commodities listed in other codes and standards, such as those from FM Global, the Global Asset Protection Services (GAPS) Guidelines, and the *International Building Code*. This review resulted in a few changes to the products listed in Table A.20.4, including the introduction of new products, including the following:

1. Appliances with no appreciable exterior plastic but appreciable interior plastic
2. Plastic PET bottles greater than 5 gal (20 L) filled with noncombustible liquids
3. Mineral spirit–impregnated charcoal
4. Gypsum board
5. Snack foods

EDUFIRE.IR

TABLE A.20.4(a) *Examples of Commodities Not Addressed by Classifications in Section 20.4*

Ammunition Components
- Bulk primers and powder
Batteries
- Lithium and other similar exotic metals
- Lithium-ion and other rechargeable batteries that contain combustible electrolyte
Boat Storage
- Stored on racks
Boxes, Crates
- Empty, wood slatted*
Carpet Rolls
Combustible Metals — unless specifically identified otherwise
Compressed or Liquefied Flammable Gases (i.e., filled propane cylinders) — unless specifically identified otherwise
Explosives
- Blasting primers and similar items
Fertilizers (nitrates)
Fireworks
- Consumer and display
Flammable and Combustible Liquids — unless specifically identified otherwise
- Liquids that contain greater than 20 percent alcohol
Hanging Garments, Bulk Storage
Lighters (butane)
- Loose in large containers (Level 3 aerosol)
Storage Container
- Large container storage of household goods

*Should be treated as idle pallets.

TABLE A.20.4(b) *Alphabetical Listing of Commodity Classes*

Product Heading	***Product***	***NFPA 13***
Batteries	Dry cells (excludes lithium, lithium-ion, and other similar exotic metals or combustible electrolyte); without blister packing (if blister packed refer to commodity classification definitions)	Class I
	Vehicle; any size (e.g., automobile or truck); empty plastic casing	Group A Nonexpanded
	Vehicle; large (e.g., truck or larger); dry or wet (excludes lithium-ion and other cells containing combustible electrolyte) cells	Group A Nonexpanded
	Vehicle; small (e.g., automobile); wet (excludes lithium-ion and other cells containing combustible electrolyte) cells	Class I
Empty Containers	Noncombustible	Class I
	PET, bottles or jars	Class IV
	Rigid plastic (not including PET), up to 32 oz. (1 L)	Group A Nonexpanded
	Rigid plastic (not including PET), greater than 32 oz. (1 L)	Group A Expanded
	Wood; solid sided (e.g., crates, boxes)	Class II
Film Rolls, Including Photographic	Film (polypropylene, polyester, polyethylene); rolled on any reel type	Group A Nonexpanded
	Film; 35 mm metal film cartridges in polyethylene cans; cartoned	Class III

EDUFIRE.IR

TABLE A.20.4(b) Continued

Product Heading	*Product*	*NFPA 13*
	Film; motion picture or bulk rolls in polycarbonate, polyethylene or in metal cans; polyethylene bagged; cartoned	Class II
	Film; rolls in polycarbonate plastic cassettes; cartoned	Class IV
	Photographic paper; sheets; bagged in polyethylene; cartoned	Class III
Flammable/ Combustible Liquids	Aerosol; Level 1	Class III
	Lighters; butane; blister-packed; cartoned	Group A Nonexpanded
	Liquids; up to 20 percent alcohol (e.g. alcoholic beverages, flavoring extracts); greater than 5 gal (20 L) plastic containers with wall thickness greater than ¼ in. (6 mm)	Group A Nonexpanded
	Liquids; up to 20 percent alcohol (e.g., alcoholic beverages, flavoring extracts); metal, glass or ceramic containers	Class I
	Liquids; up to 20 percent alcohol (e.g., alcoholic beverages, flavoring extracts); plastic containers greater than 5 gal (20 L) and wall thickness up to ¼ in. (6 mm)	Class II
	Liquids; up to 20 percent alcohol (e.g., alcoholic beverages, flavoring extracts); up to 5 gal (20 L) plastic bottles or jars	Class I
	Liquids; up to 20 percent alcohol (e.g., alcoholic beverages, flavoring extracts); wood containers	Class II
Food Products — Frozen	Frozen foods; nonwaxed or nonplastic packaging	Class I
	Frozen foods; plastic trays	Class III
	Frozen foods; waxed or plastic-coated paper packaging	Class II
Food Products — Non-Frozen	Butter (stick or whipped spread) or margarine (up to 50 percent oil)	Class III
	Dry foods (such as baked goods, candy, cereals, cheese, chocolate, cocoa, coffee, grains, granular sugar, nuts, etc.); bagged or cartoned	Class III
	Foods (e.g., coffee, fish products, fruit, meat products, nuts, poultry, etc.); metal cans	Class I
	Fruits and vegetables (noncombustible semi-liquids); crushed; plastic containers up to 5 gal (20 L)	Class I
	Fruits and vegetables; fresh; wood spacers, non-plastic trays or containers	Class I
	Margarine; over 50 and up to 80 percent oil	Group A Nonexpanded
	Meat; fresh; no plastic packaging; exposed	Class I
	Meat; fresh; no plastic packaging; cartoned	Class II
	Meat; fresh; plastic trays	Class III
	Milk; any container; stored in solid plastic crates	Group A Nonexpanded
	Milk; paper containers, or plastic bottles or jars up to 5 gal (20 L) plastic bottles or jars	Class I
	Salt; bagged	Class I
	Salt; cartoned	Class II
	Snack foods (e.g., potato chips); plasticized aluminum bags; cartoned	Group A Nonexpanded
	Syrup; wooden container	Class II

(Continues)

EDUFIRE.IR

TABLE A.20.4(b) *Continued*

Product Heading	*Product*	*NFPA 13*
Furniture and Bedding	Furniture and bedding; with foam cushioning	Group A Expanded
	Furniture; metal (e.g., file cabinets or desks with plastic trim); cartoned	Class I
	Furniture; wood (e.g., doors, windows, cabinets, etc.); no plastic coverings or foam cushioning	Class III
	Furniture; wood; plastic coverings nonexpanded plastic trim	Class IV
	Box spring; standard (minimal plastic materials)	Class III
	Box spring; wrapped in plastic cover	Class IV
	Mattress; foam (in finished form)	Group A Expanded
Housing Materials/ Appliances	Appliances; major (e.g., stoves, refrigerators); no appreciable plastic interior or exterior trim; cartoned	Class II
	Appliances; major (e.g., stoves, refrigerators); no appreciable plastic interior or exterior trim; exposed	Class I
	Appliances; no appreciable plastic exterior trim (interior of unit can have appreciable plastic)	Class III
	Carpet tiles; cartoned	Group A Nonexpanded
	Fiberglass insulation; paper-backed rolls; bagged or unbagged	Class IV
	Floor coverings; vinyl, stacked tiles	Class IV
	Floor coverings; vinyl; rolled	Group A Nonexpanded
	Gypsum board	Class I
	Housing materials (such as sinks, countertops, etc.); noncombustible, cartoned or crated	Class II
	Paint; oil-based; friction-top metal containers; cartoned	Class IV
	Paint; water-based (latex); friction-top metal containers; cartoned	Class I
	Roofing shingles; asphalt-coated fiberglass	Class III
	Roofing shingles; asphalt-impregnated felt	Class IV
Miscellaneous	Ammunition; small arms and shotgun; cartoned	Class IV
	Charcoal; mineral spirit impregnated; bagged	Group A Expanded
	Charcoal; standard (non-mineral spirit impregnated); bagged	Class III
	Leather hides; baled	Class II
	Leather; finished products (e.g., shoes, jackets, gloves, bags, luggage, belts)	Class III
	Motors; electric	Class I
	Shock absorbers; metal dust cover	Class II
	Shock absorbers; plastic dust cover	Class III
	Skis; composite materials (plastic, fiberglass, foam, etc.)	Class IV
	Tobacco products; cartoned	Class III
	Toys; stuffed; foam or synthetic	Group A Expanded
	Transformer; dry or empty (i.e., void of oil)-filled	Class I
Noncombustible Liquids	Liquids or semi-liquids; PET containers greater than 5 gal (20 L) having a nominal wall thickness greater than 0.25 in. (6 mm)	Class IV
	Liquids or semi-liquids; PET containers up to 5 gal (20 L) or greater than 5 gal (20 L) having a nominal wall thickness up to 0.25 in. (6 mm)	Class I

EDUFIRE.IR

TABLE A.20.4(b) Continued

Product Heading	*Product*	*NFPA 13*
	Liquids or semi-liquids (e.g., crushed fruits and vegetables); plastic containers up to 5 gal (18.9 L) capacity	Class I
	Liquids or semi-liquids; plastic (except PET) containers greater than 5 gal (20 L) capacity having a nominal wall thickness greater than 0.25 in. (6 mm)	Group A Nonexpanded
	Liquids or semi-liquids; plastic (except PET) containers greater than 5 gal (20 L) capacity having a nominal wall thickness up to 0.25 in. (6 mm)	Class II
	Liquids; cardboard drink boxes, plastic-coated, wax-coated, and/or aluminum-lined; exposed or on corrugated carton trays with plastic sheeting.	Class I
	Liquids; cardboard drink boxes, plastic-coated, wax-coated, and/or aluminum-lined; stored in plastic containers	Group A Nonexpanded
	Liquids; glass bottles or jars; cartoned	Class I
	Liquids; pharmaceuticals (nonflammable); glass bottles or jars; cartoned	Class II
	Liquids; plastic bottles or jars; stored in open or solid plastic crates	Group A Nonexpanded
Paper Products	Book signatures (paper part of book without hard cover)	Class II
	Cartons (i.e., cardboard flats); corrugated; partially assembled	Class IV
	Cartons (i.e., cardboard flats); corrugated; unassembled in neat piles	Class III
	Cartons; wax-coated, single-walled corrugated	Group A Nonexpanded
	Cellulosic paper products; nonwax-coated (e.g., books, cardboard games, cartoned tissue products, magazines, newspapers, paper cups, paper plates, paper towels, plastic-coated paper food containers, stationery)	Class III
	Cellulosic paper products; wax-coated (e.g., paper plates, cups); loosely packed; cartoned	Group A Nonexpanded
	Cellulosic paper products; wax-coated (e.g., paper plates, cups.); nested; cartoned	Class IV
	Matches; paper-type; cartoned	Class IV
	Matches; wooden; cartoned	Group A Nonexpanded
	Rolled; lightweight; in storage racks	Class IV
	Rolled; medium or heavyweight; in storage racks or on-side	Class III
	Tissue products; plastic-wrapped; cartoned	Class III
	Tissue products; plastic-wrapped; exposed	Group A Nonexpanded
Plastic/Rubber	ABS (Acrylonitrile-butadiene-styrene copolymer)	Group A Nonexpanded
	Acetal (polyformaldehyde)	Group A Nonexpanded
	Acrylic (polymethyl methacrylate)	Group A Nonexpanded
	Automobile bumpers and dashboards	Group A Expanded
	Butyl rubber	Group A Nonexpanded
	Cellulose Acetate	Class IV
	Cellulose Acetate Butyrate	Group A Nonexpanded
	Chloroprene rubber	Class IV
	Containers; nonexpanded plastic gridded or solid; collapsed or nested with no air spaces	Group A Nonexpanded
	ECTFE (ethylene-chlorotrifluoro-ethylene copolymer)	Class IV
	EPDM (ethylene-propylene rubber)	Group A Nonexpanded

(Continues)

EDUFIRE.IR

TABLE A.20.4(b) *Continued*

Product Heading	*Product*	*NFPA 13*
	ETFE (ethylene-tetrafluoroethylene copolymer)	Class IV
	Ethyl Cellulose	Group A Nonexpanded
	FEP (fluorinated ethylene-propylene copolymer)	Class IV
	FRP (fiberglass-reinforced polyester)	Group A Nonexpanded
	Melamine (melamine formaldehyde)	Class III
	Nitrile Rubber (acrylonitrile-butadiene rubber)	Group A Nonexpanded
	Nylon (nylon 6, nylon 6/6)	Group A Nonexpanded
	PCTFE (polychlorotrifluoroethylene)	Class III
	PET (Polyethylene Terephthalate — thermoplastic polyester)	Group A Nonexpanded
	Phenolic	Class III
	Plastics; stored in fully closed and solid (no openings), metal containers	Class I
	Polybutadiene	Group A Nonexpanded
	Polycarbonate	Group A Nonexpanded
	Polyester elastomer	Group A Nonexpanded
	Polyethylene	Group A Nonexpanded
	Polypropylene	Group A Nonexpanded
	Polystyrene; foam products (plates, cups, etc.)	Group A Expanded
	Polystyrene; rigid products	Group A Nonexpanded
	Polyurethane	Group A Expanded
	PTFE (polytetrafluoroethylene)	Class III
	PVC (polyvinyl chloride) products, up to 20 percent plasticizer	Class III
	PVC (polyvinyl chloride) products, greater than 20 percent plasticizer	Group A Nonexpanded
	PVC resins; bagged	Class III
	PVDC (polyvinylidene chloride)	Class III
	PVDF (polyvinylidene fluoride)	Class III
	PVF (polyvinyl fluoride)	Group A Nonexpanded
	Rubber; natural in blocks; cartoned	Group A Nonexpanded
	Rubber; natural; expanded	Group A Expanded
	Rubber; natural; nonexpanded	Group A Nonexpanded
	Rubber; synthetic (santoprene)	Group A Nonexpanded
	SAN (styrene acrylonitrile)	Group A Nonexpanded
	SBR (styrene-butadiene rubber)	Group A Nonexpanded
	Silicone rubber	Class IV
	Urea (urea formaldehyde)	Class III
Plastic Containers	Bottles or jars (except PET) greater than 1 gal (4 L) containing noncombustible solids	Group A Nonexpanded
	Bottles or jars (except PET) up to 1 gal (4 L) containing noncombustible solids	Group A, cartoned (treat as cartoned even if exposed) Nonexpanded

EDUFIRE.IR

TABLE A.20.4(b) Continued

Product Heading	*Product*	*NFPA 13*
Powders/Pills	Pharmaceutical pills; glass bottles or jars; cartoned	Class II
	Pharmaceuticals pills; plastic bottles or jars; cartoned	Class IV
	Polyvinyl Alcohol (PVA) resins; bagged	Class IV
	Powders; combustible (ordinary such as sugar or flour); free-flowing; bagged	Class II
	Powders; noncombustible free-flowing powdered or granular materials (cement, calcium chloride, clay, iron oxide, sodium chloride, sodium silicate, etc.)	Class I
	Powders; noncombustible; glass bottles or jars; cartoned	Class I
	Powders; noncombustible; PET bottles or jars	Class II
	Powders; noncombustible; plastic (other than PET) bottles or jars; exposed	Group A Nonexpanded
	Powders; noncombustible; plastic bottles or jars greater than 1 gal (4 L) capacity	Group A Nonexpanded
	Powders; noncombustible; plastic bottles or jars up to 1 gal (4 L) capacity; cartoned	Class IV
Textile Materials/ Products	Cloth; natural fibers; baled	Class III
	Cloth; synthetic cloth	Group A Nonexpanded
	Clothing; natural fibers (e.g., wool, cotton) and viscose	Class III
	Cotton; cartoned	Class III
	Diapers; cotton or linen	Class III
	Diapers; plastic or nonwoven fabric; cartoned	Class IV
	Diapers; plastic or nonwoven fabric; plastic-wrapped; exposed	Group A Nonexpanded
	Fabric; rayon and nylon	Group A Nonexpanded
	Fabric; synthetic (except rayon and nylon); greater than 50/50 blend	Group A Nonexpanded
	Fabric; synthetic (except rayon and nylon); up to 50/50 blend	Group A Nonexpanded
	Fabric; vinyl-coated (e.g., tablecloth); cartoned	Group A Nonexpanded
	Fibers; rayon and nylon; baled	Class IV
	Fibers; synthetic (except rayon and nylon); baled	Group A Nonexpanded
	Thread or yarn; rayon and nylon; wood or paper spools	Class IV
	Thread or yarn; rayon or nylon; plastic spools	Group A Nonexpanded
	Thread or yarn; synthetic (except rayon and nylon); greater than 50/50 blend; paper or wood spools	Group A Nonexpanded Plastic
	Thread or yarn; synthetic (except rayon and nylon); greater than 50/50 blend; plastic spools	Group A Nonexpanded
	Thread or yarn; synthetic (except rayon and nylon); up to 50/50 blend; plastic spools	Group A Nonexpanded
	Thread or yarn; synthetic (except rayon and nylon); up to 50/50 blend; wood or paper spools	Group A Nonexpanded Plastic
Wax Products	Candles	Group A Expanded
	Paraffin or petroleum wax; blocks	Group A Expanded
Wire/Cable/Spools	Spools; plastic; empty	Group A Nonexpanded
	Spools; wood; empty	Class III
	Wire or cable; PVC insulated; metal or wood spools	Class II

(Continues)

EDUFIRE.IR

TABLE A.20.4(b) Continued

Product Heading	*Product*	*NFPA 13*
	Wire or cable; PVC insulated; plastic spools	Class IV
	Wire; bare; metal spools, exposed	Class I
	Wire; bare; metal spools; cartoned	Class II
	Wire; bare; plastic spools; cartoned	Class IV
	Wire; bare; plastic spools; exposed	Group A Nonexpanded
	Wire; bare; wood or cardboard spools	Class II
Wood Products	Wood patterns	Class IV
	Wood products (e.g., fiberboard, lumber, particle board, plywood, pressboard with smooth ends and edges); bundled solid blocks	Class II
	Wood products (e.g., fiberboard, lumber, particle board, plywood, pressboard with smooth ends and edges); unbundled or non-solid blocks	Class III
	Wood products (e.g., toothpicks, clothespins and hangers)	Class III

20.4.1* Class I. A Class I commodity shall be defined as a noncombustible product that meets one of the following criteria:

(1) Placed directly on wood pallets
(2) Placed in single-layer corrugated cartons, with or without single-thickness cardboard dividers, with or without pallets
(3) Shrink-wrapped or paper-wrapped as a unit load with or without pallets

A.20.4.1 See Table A.20.4.1.

TABLE A.20.4.1 Examples of Class I Commodities

Product Heading	*Product*
Batteries	Dry cells (excludes lithium, lithium-ion, and other similar exotic metals or combustible electrolyte); without blister packing (if blister packed refer to commodity classification definitions)
	Vehicle; small (e.g., automobile); wet (excludes lithium-ion and other cells containing combustible electrolyte) cells
Empty Containers	Noncombustible
Flammable/Combustible Liquids	Liquids; up to 20 percent alcohol (e.g., alcoholic beverages, flavoring extracts); metal, glass or ceramic containers
	Liquids; up to 20 percent alcohol (e.g., alcoholic beverages, flavoring extracts); up to 5 gal (20 L) plastic bottles or jars
Food Products — Frozen	Frozen foods; nonwaxed or nonplastic packaging
Food Products — Non-Frozen	Foods (coffee, fish products, fruit, meat products, nuts, poultry, etc.); metal cans
	Fruits and vegetables (noncombustible semi-liquids); crushed; plastic containers up to 5 gal (20 L)
	Fruits and vegetables; fresh; wood spacers, non-plastic trays or containers
	Meat; fresh; no plastic packaging; exposed
	Milk; paper containers, or plastic bottles or jars up to 5 gal (20 L) plastic bottles or jars
	Salt; bagged
Furniture and Bedding	Furniture; metal (e.g., file cabinets or desks with plastic trim); cartoned

EDUFIRE.IR

TABLE A.20.4.1 Continued

Product Heading	*Product*
Housing Materials/ Appliances	Appliances; major (e.g., stoves, refrigerators); no appreciable plastic interior or exterior trim; cartoned
	Gypsum board
	Paint; water-based (latex); friction-top metal containers; cartoned
Miscellaneous	Motors; electric
	Transformer; dry or empty (i.e., void of oil)
Noncombustible Liquids	Liquids or semi liquids; PET containers greater than 5 gal (20 L) having a nominal wall thickness greater than 0.25 in. (6 mm)
	Liquids or semi-liquids (e.g., crushed fruits and vegetables); plastic containers up to 5 gal (20 L) capacity
	Liquids; cardboard drink boxes, plastic-coated, wax-coated, and/or aluminum-lined; exposed or on corrugated carton trays with plastic sheeting
	Liquids; glass bottles or jars; cartoned
Plastic/Rubber	Plastics; stored in fully closed and solid (no openings), metal containers
Powders/Pills	Powders; noncombustible free-flowing powdered or granular materials (cement, calcium chloride, clay, iron oxide, sodium chloride, sodium silicate, etc.); bagged
	Powders; noncombustible; glass bottles or jars; cartoned
Wire/Cable/Spools	Wire; bare; metal spools, exposed

20.4.2* Class II. A Class II commodity shall be defined as a noncombustible product that is in slatted wooden crates, solid wood boxes, multiple-layered corrugated cartons, or equivalent combustible packaging material, with or without pallets.

A.20.4.2 See Table A.20.4.2.

TABLE A.20.4.2 Examples of Class II Commodities

Product Heading	*Product*
Empty Containers	Wood; solid sided (e.g., crates, boxes)
Film Rolls, Including Photographic	Film; motion picture or bulk rolls in polycarbonate, polyethylene or in metal cans; polyethylene bagged; cartoned
Flammable/Combustible Liquids	Liquids; up to 20 percent alcohol (e.g., alcoholic beverages, flavoring extracts); plastic containers greater than 5 gal (20 L) and wall thickness up to ¼ in. (6 mm)
	Liquids; up to 20 percent alcohol (e.g., alcoholic beverages, flavoring extracts); wood containers
Food Products — Frozen	Frozen foods; waxed or plastic-coated paper packaging
Food Products — Non-Frozen	Meat; fresh; no plastic packaging; cartoned
	Salt; cartoned
	Syrup; wooden container
Housing Materials/ Appliances	Appliances; major (e.g., stoves, refrigerators); no appreciable plastic interior or exterior trim; cartoned
	Housing materials (such as sinks, countertops, etc.); noncombustible, cartoned or crated

(Continues)

EDUFIRE.IR

TABLE A.20.4.2 Continued

Product Heading	*Product*
Miscellaneous	Leather hides; baled
	Shock absorbers; metal dust cover
Noncombustible Liquids	Liquids or semi-liquids; plastic (except PET) containers greater than 5 gal (20 L) capacity having a nominal wall thickness up to 0.25 in. (6 mm)
	Liquids; pharmaceuticals (nonflammable); glass bottles or jars; cartoned
Paper Products	Book signatures (paper part of book without hard cover)
Powders/Pills	Pharmaceutical pills; glass bottles or jars; cartoned
	Powders; combustible (ordinary such as sugar or flour); free-flowing; bagged
	Powders; noncombustible; PET bottles or jars
Wire/Cable/Spools	Wire or cable; PVC insulated; metal or wood spools
	Wire; bare; metal spools; cartoned
	Wire; bare; wood or cardboard spools
Wood Products	Wood products (e.g., fiberboard, lumber, particle board, plywood, pressboard with smooth ends and edges); bundled solid blocks

20.4.3* Class III.

A.20.4.3 See Table A.20.4.3.

TABLE A.20.4.3 Examples of Class III Commodities

Product Heading	*Product*
Film Rolls, Including Photographic	Film; 35 mm metal film cartridges in polyethylene cans; cartoned
	Photographic paper; sheets; bagged in polyethylene; cartoned
Flammable/Combustible Liquids	Aerosol; Level 1
Food Products — Frozen	Frozen foods; plastic trays
Food Products — Non-Frozen	Butter (stick or whipped spread) or margarine (up to 50 percent oil)
	Dry foods (such as baked goods, candy, cereals, cheese, chocolate, cocoa, coffee, grains, granular sugar, nuts, etc.); bagged or cartoned
	Meat; fresh; plastic trays
Furniture and Bedding	Furniture; wood (doors, windows, cabinets, etc.); no plastic coverings or foam cushioning
	Box spring; standard (minimal plastic materials)
Housing Materials/ Appliances	Appliances; no appreciable plastic exterior trim (interior of unit can have appreciable plastic)
	Roofing shingles; asphalt-coated fiberglass
Miscellaneous	Charcoal; standard (non-mineral spirit impregnated); bagged
	Leather; finished products (e.g., shoes, jackets, gloves, bags, luggage, belts)
	Shock absorbers; plastic dust cover
	Tobacco products; cartoned

EDUFIRE.IR

TABLE A.20.4.3 Continued

Product Heading	*Product*
Paper Products	Cartons (i.e., cardboard flats); corrugated; unassembled in neat piles
	Cellulosic paper products; nonwax-coated (e.g., books, cardboard games, cartoned tissue products, magazines, newspapers, paper cups, paper plates, paper towels, plastic-coated paper food containers, stationery)
	Rolled; medium or heavyweight; in storage racks or on-side
	Tissue products; plastic-wrapped; cartoned
Plastic/Rubber	Melamine (melamine formaldehyde)
	PCTFE (polychlorotrifluoroethylene)
	Phenolic
	PTFE (polytetrafluoroethylene)
	PVC (polyvinyl chloride) products, up to 20 percent plasticizer
	PVC resins; bagged
	PVDC (polyvinylidene chloride)
	PVDF (polyvinylidene fluoride)
	Urea (urea formaldehyde)
Textile Materials/ Products	Cloth; natural fibers; baled
	Clothing; natural fibers (e.g., wool, cotton) and viscose
	Cotton; cartoned
	Diapers; cotton or linen
	Fabric; synthetic (except rayon and nylon); up to 50/50 blend
	Thread or yarn; synthetic (except rayon and nylon); up to 50/50 blend; wood or paper spools
Wire/Cable/Spools	Spools; wood; empty
Wood Products	Wood products (e.g., fiberboard, lumber, particle board, plywood, pressboard with smooth ends and edges); unbundled or non-solid blocks
	Wood products (e.g., toothpicks, clothespins and hangers)

20.4.3.1 A Class III commodity shall be defined as a product fashioned from wood, paper, natural fibers, or Group C plastics with or without cartons, boxes, or crates and with or without pallets.

For the 2016 edition, the Technical Committee on Sprinkler System Discharge revised the requirements now in 20.4.3 to clarify the guidelines for Class III commodities. The requirement in 20.4.3.2 was modified to clarify (1) that the percentages of plastic were equal to or less than 5; (2) the indicated values for weight applied to unexpanded Group A plastic; and (3) the indicated values for volume applied to expanded Group A plastic. Paragraph 20.4.3.3, along with Figure 20.4.3.3(a) and Figure 20.4.3.3(b), were added to clarify how to classify commodities as Class III, Class IV, or Group A plastics when a mix of both unexpanded and expanded Group A plastics are present as part of the overall product, depending on whether the commodity is cartoned [Figure 20.4.3.3(a)] or exposed [Figure 20.4.3.3(b)].

20.4.3.2 A Class III commodity shall be permitted to contain a limited amount (5 percent or less by weight of nonexpanded plastic or 5 percent or less by volume of expanded plastic) of Group A or Group B plastics.

EDUFIRE.IR

CLOSER LOOK [20.4.3.2]

Storage Involving Group A Plastics

Once it has been determined that the stored commodity that requires protection contains Group A plastic, the process of determining the commodity class, although sometimes confusing, can be broken down into simple steps.

The critical components used to determine the commodity classification are individual storage units (e.g., unit load, pallet load), the primary packaging material, and the pallet type and composition. A simple correlation can be formed — an individual load (such as a pallet load) takes up a volume of space and has a certain total weight. As the amount of plastic that makes the load increases, the severity of the fire and the protection criteria will also increase.

Confusion often occurs when it comes down to the percentages by weight or volume of Group A plastic that differentiate classification levels from a Class III all the way to an exposed expanded plastic. It is the weight and volume of the load, not the individual items in the load, that determine the classification.

Weight

The weight is often misapplied to the individual product rather than to the total load. Simply imagine the load (usually on a pallet) sitting on a scale — that is the total weight of the load. Some loads are individual units as they stand on their own, but the concept is the same: the total load that will burn as a unit has a weight. The weight of the total quantity of unexpanded Group A plastic will be measured against the total weight of the load to determine the percentage of plastic weight. Therefore, to calculate the percentage of weight or volume of the product, the following factors must be included:

1. The product itself
2. Internal packaging and material, such as any dividers or protective material
3. External packaging material (if any)
4. Pallet or shipping aid (if any)
5. The total weight of plastic as a percentage, which is calculated as follows:

$$\left(\frac{\textit{Total weight of unexpanded Group A plastic}}{\textit{Total weight of load}}\right) \times 100 = \%\ \textit{weight}$$

Volume

The dimensions of the load as it sits on the ground, including the pallet and storage aid, has width, length, and height. The volume of the load is calculated as follows:

$$\textit{length} \times \textit{width} \times \textit{height} = \textit{total load volume}$$

The volume of expanded Group A plastic will be measured against the total volume of the load to determine the percentage of plastic. The total volume of plastic as a percentage is calculated as follows:

$$\left(\frac{\textit{Total volume of expanded Group A plastic}}{\textit{Total volume of load}}\right) \times 100 = \%\ \textit{volume}$$

A wood pallet that is assumed to be used in commodity classification adds both weight and volume to the load, which should be used to calculate the percentage by weight of plastic on the load and the percentage by volume of plastic on the load. When a plastic pallet (not listed) is used, it carries its own increase to commodity class. Therefore, the weight and volume of the plastic pallet should be considered in the overall makeup of the load but not as a plastic weight or volume.

Group A Plastic

Group A plastics can exist in Class III, Class IV, and all the subgroups of Group A plastics. Group A plastics include the following subgroups (in order of increased fire severity):

1. Cartoned unexpanded
2. Cartoned expanded
3. Exposed unexpanded
4. Exposed expanded

For Group A plastics to qualify as a Class III or a Class IV commodity, the following factors must be taken into consideration:

1. Percentage by weight of load of unexpanded Group A plastics
2. Percentage by volume of load of expanded Group A plastics
3. Whether or not the Group A plastic is free flowing
4. Internal packaging and material, such as any dividers or protective material
5. Whether cartoned or exposed
6. Pallet or shipping aid (if any)

Class III Commodity

Group A plastics can be protected as a Class III commodity if the mixture of Group A plastics and all other material by weight and volume contains only a limited amount (5 percent or less by weight of unexpanded plastic or 5 percent or less by volume of expanded plastic) of Group A plastics.

Class IV Commodity

Group A plastics can be protected as a Class IV commodity when the load meets the following criteria:

1. Consists of free-flowing Group A plastic materials
2. Is cartoned or within a wooden container and contains greater than 5 percent and up to 15 percent by weight of Group A unexpanded plastic
3. Is cartoned or within a wooden container and contains greater than 5 percent and up to 25 percent by volume of expanded Group A plastics
4. Is cartoned or within a wooden container and contains a mix of Group A expanded and unexpanded plastics and complies with Figure 20.4.3.3(a) and Figure 20.4.3.3(b)
5. Is exposed and contains greater than 5 percent and up to 15 percent by weight of Group A unexpanded plastic
6. Is exposed and contains a mix of Group A expanded and unexpanded plastics and complies with Figure 20.4.3.3(a) and Figure 20.4.3.3(b)

EDUFIRE.IR

CLOSER LOOK [20.4.3.2] *Continued*

Once the limits of Class III or IV have been exceeded for weight or volume, the commodity class will be a Group A plastic commodity defined as one of the subgroups discussed earlier.

Group A unexpanded plastic commodity includes the following criteria:

1. Is cartoned or within a wooden container and contains greater than 15 percent by weight of Group A unexpanded plastic
2. Is cartoned or within a wooden container and contains greater than 25 percent and up to 40 percent by volume of Group A expanded plastic
3. Is cartoned or within a wooden container and contains a mix of Group A unexpanded and expanded plastics, in compliance with Figure 20.4.3.3(a) and Figure 20.4.3.3(b)
4. Is exposed and contains greater than 15 percent by weight of Group A unexpanded plastic
5. Is exposed and contains greater than 5 percent and up to 25 percent by volume of Group A expanded plastic
6. Is exposed and contains a mix of Group A unexpanded and expanded plastics, in compliance with Figure 20.4.3.3(a) and Figure 20.4.3.3(b)

Group A expanded plastic commodity includes the following criteria:

1. Is cartoned or within a wooden container and contains greater than 40 percent by volume of Group A expanded plastic
2. Is exposed and contains greater than 25 percent by volume of Group A expanded plastic

20.4.3.3 Class III commodities containing a mix of both Group A expanded and nonexpanded plastics shall comply with Figure 20.4.3.3(a) where they are within cartons, boxes, or crates or with Figure 20.4.3.3(b) where they are exposed.

20.4.4* Class IV.

A.20.4.4 See Table A.20.4.4.

A designer who is considering classifying a commodity mixed with plastics needs to consider the location of the plastic commodity within a carton. A cartoned commodity that is 15 percent plastic by weight, where all the nonplastic content is surrounded by plastic, behaves like a plastic commodity in a fire. Likewise, a heavy metal item encased in expanded plastic packaging that occupies 25 percent of the carton behaves like an expanded plastic commodity in a fire.

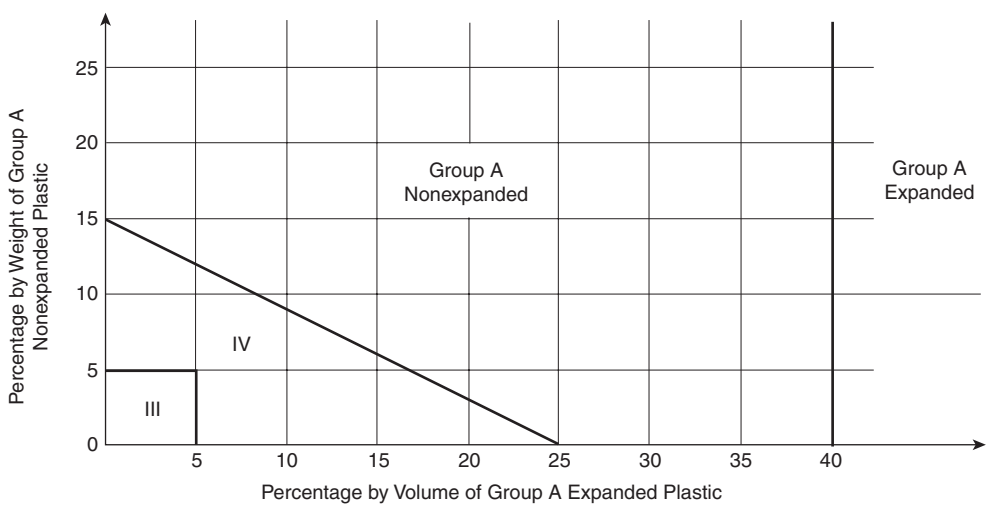

III - Class III Commodity. Refer to 20.3.2 if a plastic pallet is used.

IV - Class IV Commodity. Refer to 20.3.2 if a plastic pallet is used.

FIGURE 20.4.3.3(a) *Commodities, Cartoned or Within a Wooden Container, Containing a Mixture of Expanded and Nonexpanded Group A Plastics.*

EDUFIRE.IR

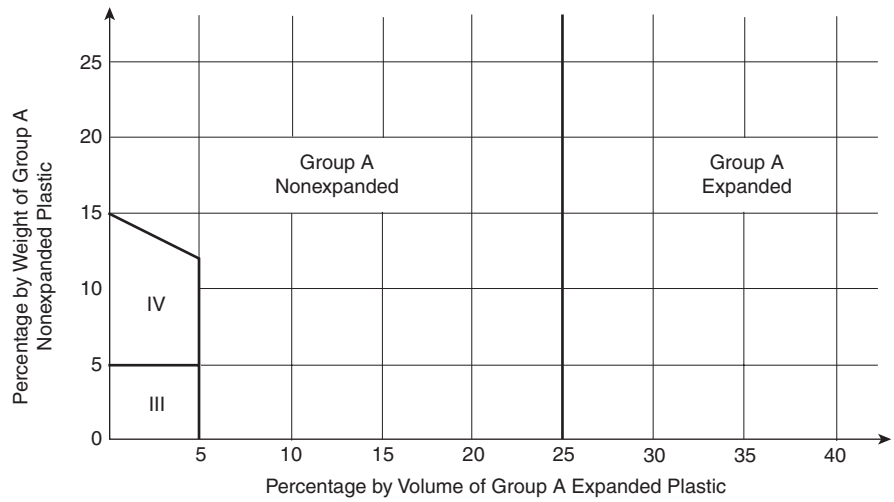

III - Class III Commodity. Refer to 20.3.2 if a plastic pallet is used.

IV - Class IV Commodity. Refer to 20.3.2 if a plastic pallet is used.

FIGURE 20.4.3.3(b) *Exposed Commodities Containing a Mixture of Expanded and Nonexpanded Group A Plastics.*

ASK THE AHJ

If a tenant is storing one of the plastics in the Group A list, and the plastic has been modified with fire retardants, can the authority having jurisdiction accept a lesser hazard commodity classification than Group A plastics?

Without laboratory testing that demonstrates that the modified Group A plastic can be classified as a lesser hazard classification, plastics appearing on the Group A list are considered Group A plastics.

TABLE A.20.4.4 *Examples of Class IV Commodities*

Product Heading	*Product*
Empty Containers	PET, bottles or jars
Film Rolls, Including Photographic	Film; rolls in polycarbonate plastic cassettes; cartoned
Furniture and Bedding	Furniture; wood; plastic coverings nonexpanded plastic trim
	Box spring; wrapped in plastic cover
Housing Materials/Appliances	Fiberglass insulation; paper-backed rolls; bagged or unbagged
	Floor coverings; vinyl, stacked tiles
	Paint; oil-based; friction-top metal containers; cartoned
	Roofing shingles; asphalt-impregnated felt
Miscellaneous	Ammunition; small arms and shotgun; cartoned
	Skis; composite materials (plastic, fiberglass, foam, etc.)
Noncombustible Liquids	Liquids or semi-liquids; PET containers greater than 5 gal (20 L) having a nominal wall thickness greater than 0.25 in. (6 mm)
Paper Products	Cartons (i.e., cardboard flats); corrugated; partially assembled
	Cellulosic paper products; wax-coated (paper plates, cups, etc.); nested; cartoned
	Matches; paper-type; cartoned
	Rolled; lightweight; in storage racks

EDUFIRE.IR

TABLE A.20.4.4 Continued

Product Heading	*Product*
Plastic/Rubber	Cellulose Acetate
	Chloroprene rubber
	ECTFE (ethylene-chlorotrifluoro-ethylene copolymer)
	ETFE (ethylene-tetrafluoroethylene copolymer)
	FEP (fluorinated ethylene-propylene copolymer)
	Silicone rubber
Powders/Pills	Pharmaceuticals pills; plastic bottles or jars; cartoned
	Polyvinyl Alcohol (PVA) resins; bagged
	Powders; noncombustible; plastic bottles or jars up to 1 gal (4 L) capacity; cartoned
Textile Materials/Products	Cloth; synthetic cloth
	Diapers; plastic or nonwoven fabric; cartoned
	Fabric; rayon and nylon
	Fibers; rayon and nylon; baled
	Thread or yarn; rayon and nylon; wood or paper spools
	Thread or yarn; synthetic (except rayon and nylon); greater than 50/50 blend; paper or wood spools
Wire/Cable/Spools	Wire or cable; PVC insulated; plastic spools
	Wire; bare; plastic spools; cartoned
Wood Products	Wood patterns

20.4.4.1 A Class IV commodity shall be defined as a product, with or without pallets, that meets one of the following criteria:

(1) Constructed partially or totally of Group B plastics
(2) Consists of free-flowing Group A plastic materials
(3) Cartoned, or within a wooden container, that contains greater than 5 percent and up to 15 percent by weight of Group A nonexpanded plastic
(4) Cartoned, or within a wooden container, that contains greater than 5 percent and up to 25 percent by volume of expanded Group A plastics
(5) Cartoned, or within a wooden container, that contains a mix of Group A expanded and nonexpanded plastics and complies with Figure 20.4.3.3(a)
(6) Exposed, that contains greater than 5 percent and up to 15 percent by weight of Group A nonexpanded plastic
(7) Exposed, that contains a mix of Group A expanded and nonexpanded plastics and complies with Figure 20.4.3.3(b)

20.4.4.2 The remaining materials shall be permitted to be noncombustible, wood, paper, natural fibers, or Group B or Group C plastics.

20.4.5* Classification of Plastics, Elastomers, and Rubber. Plastics, elastomers, and rubber shall be classified as Group A, Group B, or Group C.

A.20.4.5 The categories listed in 20.4.5.1, 20.4.6, and 20.4.7 are based on unmodified plastic materials. The use of fire- or flame-retarding modifiers or the physical form of the material could change the classification.

The addition of fire retardants to plastic should not be relied upon as the sole basis for a reduction in classification given the unknown performance of the fire retardant under a storage

EDUFIRE.IR

scenario. It is expected that full-scale or commodity classification type testing would be necessary to justify any such reduction in classification. No reduction in classification should be given for plastics simply because they contain a fire retardant.

Plastic materials not specifically classified in 20.4.5 should be protected as Group A plastics unless full-scale or commodity classification type testing demonstrates otherwise. It is not possible to classify full-scale fire performance of plastics by looking solely at heat of combustion. Plastic materials should not be categorized into a Group (A, B, or C) based upon comparing heat of combustion with values for plastics already classified in NFPA 13.

Fire testing has demonstrated that the fire hazard of a Group A plastic can be reduced with the addition of various inert materials or fire retardants. However, not all plastics that are mixed with fire retardant materials show a reduction in their fire hazard behavior. That is why it is critical to verify that the proper blend of plastic and fire retardant materials has been proven in full-scale fire testing before a reduction in the commodity classification of a Group A plastic containing fire retardant materials can be considered.

ASK THE AHJ

Which commodity classification needs to be enforced for the fire sprinkler system design if the commodity is a plastic commodity not appearing in the lists in 20.4.5.1, 20.4.6, or 20.4.7?

If the specific plastic commodity cannot be determined, the most conservative approach is to use the highest plastic hazard, Group A plastics. Designing the system to a lesser hazard might lead to insufficient water getting to the fire, allowing the fire to spread and overwhelm the system.

20.4.5.1* Group A. The following materials shall be classified as Group A:

(1) ABS (acrylonitrile-butadiene-styrene copolymer)
(2) Acetal (polyformaldehyde)
(3) Acrylic (polymethyl methacrylate)
(4) Butyl rubber
(5) Cellulosics (cellulose acetate, cellulose acetate butyrate, ethyl cellulose)
(6) EPDM (ethylene-propylene rubber)
(7) FRP (fiberglass-reinforced polyester)
(8) Natural rubber
(9) Nitrile-rubber (acrylonitrile-butadiene-rubber)
(10) Nylon (nylon 6, nylon 6/6)
(11) PET (thermoplastic polyester)
(12) Polybutadiene
(13) Polycarbonate
(14) Polyester elastomer
(15) Polyethylene
(16) Polypropylene
(17) Polystyrene
(18) Polyurethane
(19) PVC (polyvinyl chloride — highly plasticized, with plasticizer content greater than 20 percent) (rarely found)
(20) PVF (polyvinyl fluoride)
(21) SAN (styrene acrylonitrile)
(22) SBR (styrene-butadiene rubber)

The Technical Committee on Sprinkler System Discharge modified some of the listings for Group A, Group B, and Group C plastics in the 2016 edition to be consistent with their indicated heat of combustion. That change resulted in cellulosics, natural rubber (not expanded), and nylon being moved from Group B to Group A, along with polyvinyl fluoride (PVF) being moved from Group C to Group A. Although some of the listings were changed, it is important to understand that these listings are generally for plastics in their

EDUFIRE.IR

chemical state and do not take into consideration the effect on their commodity classification for their physical state as a product. See Table A.20.4.5.1 in combination with Table A.20.3 for general guidance on the commodity classification of a Group A plastic product in its finished form.

A.20.4.5.1 See Table A.20.4.5.1.

TABLE A.20.4.5.1 *Examples of Group A Plastic Commodities*

Product Heading	*Product*	*Expanded/ Nonexpanded*
Batteries	Vehicle; any size (e.g., automobile or truck); empty plastic casing	Nonexpanded
	Vehicle; large (e.g., truck or larger); dry or wet (excludes lithium-ion and other cells containing combustible electrolyte) cells	Nonexpanded
Empty Containers	Rigid plastic (not including PET), up to 32 oz (1 L)	Nonexpanded
	Rigid plastic (not including PET), greater than 32 oz (1 L)	Expanded
Film Rolls, Including Photographic	Film (polypropylene, polyester, polyethylene); rolled on any reel type	Nonexpanded
Flammable/ Combustible Liquids	Lighters; butane; blister-packed; cartoned	Nonexpanded
	Liquids; up to 20 percent alcohol (e.g., alcoholic beverages, flavoring extracts); greater than 5 gal (20 L) plastic containers with wall thickness greater than ¼ in. (6 mm)	Nonexpanded
Food Products — Non-Frozen	Margarine; over 50 and up to 80 percent oil	Nonexpanded
	Milk; any container; stored in solid plastic crates	Nonexpanded
	Snack foods (e.g., potato chips); plasticized aluminum bags; cartoned	Nonexpanded
Furniture and Bedding	Furniture and bedding; with foam cushioning	Expanded
	Mattress; foam (in finished form)	Expanded
Housing Materials/ Appliances	Carpet tiles; cartoned	Nonexpanded
	Floor coverings; vinyl; rolled	Nonexpanded
Miscellaneous	Charcoal; mineral spirit impregnated; bagged	Expanded
	Toys; stuffed; foam or synthetic	Expanded
Noncombustible Liquids	Liquids or semi-liquids; plastic (except PET) containers greater than 5 gal (20 L) capacity having a nominal wall thickness greater than ¼ in. (6 mm)	Nonexpanded
	Liquids; cardboard drink boxes, plastic-coated, wax-coated, and/or aluminum-lined; stored in plastic containers	Nonexpanded
	Liquids; plastic bottles or jars; stored in open or solid plastic crates	Nonexpanded
Paper Products	Cartons; wax-coated, single-walled corrugated	Nonexpanded
	Cellulosic paper products; wax-coated (paper plates, cups, etc.); loosely packed; cartoned	Nonexpanded
	Matches; wooden; cartoned	Nonexpanded
	Tissue products; plastic-wrapped; exposed	Nonexpanded
Plastic/Rubber	ABS (Acrylonitrile-butadiene-styrene copolymer)	Nonexpanded
	Acetal (polyformaldehyde)	Nonexpanded
	Acrylic (polymethyl methacrylate)	Nonexpanded
	Automobile bumpers and dashboards	Expanded
	Butyl rubber	Nonexpanded
	Cellulose Acetate Butyrate	Nonexpanded
	Containers; nonexpanded plastic gridded or solid; collapsed or nested with no air spaces	Nonexpanded

(Continues)

EDUFIRE.IR

TABLE A.20.4.5.1 Continued

Product Heading	*Product*	*Expanded/ Nonexpanded*
	EPDM (ethylene-propylene rubber)	Nonexpanded
	Ethyl Cellulose	Nonexpanded
	FRP (fiberglass-reinforced polyester)	Nonexpanded
	Nitrile Rubber (acrylonitrile-butadiene rubber)	Nonexpanded
	Nylon (nylon 6, nylon 6/6)	Nonexpanded
	PET (Polyethylene Terephthalate - thermoplastic polyester)	Nonexpanded
	Polybutadiene	Nonexpanded
	Polycarbonate	Nonexpanded
	Polyester elastomer	Nonexpanded
	Polyethylene	Nonexpanded
	Polypropylene	Nonexpanded
	Polystyrene; foam products (e.g., plates, cups, etc.)	Expanded
	Polystyrene; rigid products	Nonexpanded
	Polyurethane	Expanded
	PVC (polyvinyl chloride) products, greater than 20 percent plasticizer	Nonexpanded
	PVF (polyvinyl fluoride)	Nonexpanded
	Rubber; natural in blocks; cartoned	Nonexpanded
	Rubber; natural; expanded	Expanded
	Rubber; natural; nonexpanded	Nonexpanded
	Rubber; synthetic (santoprene)	Nonexpanded
	SAN (styrene acrylonitrile)	Nonexpanded
	SBR (styrene-butadiene rubber)	Nonexpanded
Plastic Containers	Bottles or jars (except PET) greater than 1 gal (4 L) containing noncombustible solids	Nonexpanded
	Bottles or jars (except PET) up to 1 gal (4 L) containing noncombustible solids (Group A, cartoned (treat as cartoned even if exposed)	Nonexpanded
Powders/Pills	Powders; noncombustible; plastic (other than PET) bottles or jars; exposed	Nonexpanded
	Powders; noncombustible; plastic bottles or jars greater than 1 gal (4 L) capacity	Nonexpanded
Textile Materials/ Products	Diapers; plastic or nonwoven fabric; plastic-wrapped; exposed	Nonexpanded
	Fabric; vinyl-coated (e.g., tablecloth); cartoned	Nonexpanded
	Fabric; synthetic (except rayon and nylon; greater than 50/50 blend	Nonexpanded
	Fibers; synthetic (except rayon and nylon); baled	Nonexpanded
	Thread or yarn; rayon or nylon; plastic spools	Nonexpanded
	Thread or yarn; synthetic (except rayon and nylon); greater than 50/50 blend; plastic spools	Nonexpanded
	Thread or yarn; synthetic (except rayon and nylon); up to 50/50 blend; plastic spools	Nonexpanded
Wax Products	Candles	Expanded
	Paraffin or petroleum wax; blocks	Expanded
Wire/Cable/Spools	Spools; plastic; empty	Nonexpanded
	Wire; bare; plastic spools; exposed	Nonexpanded

EDUFIRE.IR

20.4.5.2* Group A plastics shall be further subdivided as either expanded or nonexpanded.

A.20.4.5.2 Generally, expanded plastics are low-density materials and commonly referred to as "foam plastics."

20.4.5.3 A Group A expanded plastic commodity shall be defined as a product, with or without pallets, that meets one of the following criteria:

(1) Cartoned, or within a wooden container, that contains greater than 40 percent by volume of Group A expanded plastic
(2) Exposed, that contains greater than 25 percent by volume of Group A expanded plastic

20.4.5.4 A Group A nonexpanded plastic commodity shall be defined as a product, with or without pallets, that meets one of the following criteria:

(1) Cartoned, or within a wooden container, that contains greater than 15 percent by weight of Group A nonexpanded plastic
(2) Cartoned, or within a wooden container, that contains greater than 25 percent and up to 40 percent by volume of Group A expanded plastic
(3) Cartoned, or within a wooden container, that contains a mix of Group A nonexpanded and expanded plastics, in compliance with Figure 20.4.3.3(a)
(4) Exposed, that contains greater than 15 percent by weight of Group A nonexpanded plastic
(5) Exposed, that contains greater than 5 percent and up to 25 percent by volume of Group A expanded plastic
(6) Exposed, that contains a mix of Group A nonexpanded and expanded plastics, in compliance with Figure 20.4.3.3(b)

ASK THE AHJ

How can an authority having jurisdiction discern an expanded plastic from a nonexpanded plastic?

Based on the definition in 3.3.65, expanded plastics are those plastics with embedded air pockets, such as foam coolers, exercise mats, foam presentation boards, shipping peanuts, and foam insulation boards found at home improvement stores. If the plastic does not fit that description, then it would be considered a nonexpanded (or unexpanded) plastic, such as plastic totes or plastic water bottles.

20.4.5.5 The remaining materials shall be permitted to be noncombustible, wood, paper, natural or synthetic fibers, or Group A, Group B, or Group C plastics.

20.4.6 Group B. The following materials shall be classified as Group B:

(1) Chloroprene rubber
(2) Fluoroplastics (ECTFE — ethylene-chlorotrifluoro-ethylene copolymer; ETFE — ethylene-tetrafluoroethylene-copolymer; FEP — fluorinated ethylene-propylene copolymer)
(3) Silicone rubber

20.4.7 Group C. The following materials shall be classified as Group C:

(1) Fluoroplastics (PCTFE — polychlorotrifluoroethylene; PTFE — polytetrafluoroethylene)
(2) Melamine (melamine formaldehyde)
(3) Phenolic
(4) PVC (polyvinyl chloride — flexible — PVCs with plasticizer content up to 20 percent)
(5) PVDC (polyvinylidene chloride)
(6) PVDF (polyvinylidene fluoride)
(7) Urea (urea formaldehyde)

EDUFIRE.IR

20.4.8* Plastic commodities shall be protected in accordance with Figure 20.4.8. *(See Section C.21.)*

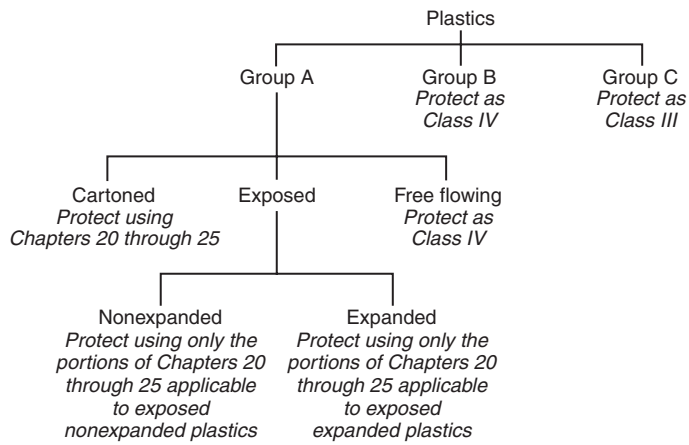

FIGURE 20.4.8 *Decision Tree.*

A.20.4.8 All arrangements of exposed plastics cannot be protected with all types of sprinklers. Only certain combinations of ceiling sprinklers and in-rack sprinklers have been found to provide acceptable protection. No full-scale fire testing has been performed that has determined acceptable criteria for exposed expanded plastics. Factory Mutual has published criteria in its data sheets to protect exposed expanded plastics based on a risk analysis and small/intermediate-scale test data. Some authorities having jurisdiction accept that criteria as an alternative to the intent of NFPA 13.

20.4.8.1 Group B plastics and free-flowing Group A plastics shall be protected the same as Class IV commodities.

20.4.8.2 Group C plastics shall be protected the same as Class III commodities.

N **20.4.9 Rubber Tires.** Pneumatic tires for passenger automobiles, aircraft, light and heavy trucks, trailers, farm equipment, construction equipment (off-the-road), and buses shall be protected as rubber tire storage in accordance with Chapters 20 through 25.

20.4.10* Classification of Rolled Paper Storage. For the purposes of this standard, the classifications of paper described in 20.4.10.1 through 20.4.10.4 shall apply and shall be used to determine the sprinkler system design criteria in accordance with Chapters 20 through 25.

A.20.4.10 *Paper Classification.* These classifications were derived from a series of large-scale and laboratory-type small-scale fire tests. It is recognized that not all paper in a class burns with exactly the same characteristics.

Paper can be soft or hard, thick or thin, or heavy or light and can also be coated with various materials. The broad range of papers can be classified according to various properties. One important property is basis weight, which is defined as the weight of a sheet of paper of a specified area. Two broad categories are recognized by industry — paper and paperboard. Paperboard normally has a basis weight of 20 lb (9.1 kg) or greater measured on a 1000 ft^2 (93 m^2) sheet. Stock with a basis weight less than 20 lb/1000 ft^2 (0.1 kg/m^2) is normally

EDUFIRE.IR

categorized as paper. The basis weight of paper is usually measured on a 3000 ft² (280 m²) sheet. The basis weight of paper can also be measured on the total area of a ream of paper, which is normally the case for the following types of printing and writing papers:

(1) *Bond paper* — 500 sheets, 17 in. × 22 in. (425 mm × 550 mm) = 1300 ft² (120 m²) per ream
(2) *Book paper* — 500 sheets, 25 in. × 38 in. (625 mm × 950 mm) = 3300 ft² (305 m²) per ream
(3) *Index paper* — 500 sheets, 25½ in. × 30½ in. (640 mm × 765 mm) = 2700 ft² (250 m²) per ream
(4) *Bristol paper* — 500 sheets, 22½ in. × 35 in. (565 mm × 890 mm) = 2734 ft² (255 m²) per ream
(5) *Tag paper* — 500 sheets, 24 in. × 36 in. (600 mm × 900 mm) = 3000 ft² (280 m²) per ream

For the purposes of this standard, all basis weights are expressed in lb/1000 ft² (kg/93 m²) of paper. To determine the basis weight per 1000 ft² (93 m²) for papers measured on a sheet of different area, the following formula should be applied:

$$\frac{\text{Base weight}}{1000\ \text{ft}^2} = \text{basis weight} \times 1000\,\text{measured area} \qquad \textbf{[A.20.4.10a]}$$

Example: To determine the basis weight per 1000 ft² (93 m²) of 16 lb (7.3 kg) bond paper:

$$\left(\frac{16\ \text{lb}}{1300\ \text{ft}^2}\right)1000 = \frac{12.3\ \text{lb}}{1000\ \text{ft}^2} \qquad \textbf{[A.20.4.10b]}$$

Large- and small-scale fire tests indicate that the burning rate of paper varies with the basis weight. Heavyweight paper burns more slowly than lightweight paper. Full-scale roll paper fire tests were conducted with the following types of paper:

(1) *Linerboard* — 42 lb/1000 ft² (0.2 kg/m²) nominal basis weight
(2) *Newsprint* — 10 lb/1000 ft² (0.05 kg/m²) nominal basis weight
(3) *Tissue* — 5 lb/1000 ft² (0.02 kg/m²) nominal basis weight

The rate of firespread over the surface of the tissue rolls was extremely rapid in the full-scale fire tests. The rate of firespread over the surface of the linerboard rolls was slower. Based on the overall results of these full-scale tests, along with additional data from small-scale testing of various paper grades, the broad range of papers has been classified into three major categories as follows:

(1) *Heavyweight* — Basis weight of 20 lb/1000 ft² (0.098/m²) or greater
(2) *Mediumweight* — Basis weight of 10 lb to 20 lb/1000 ft² (0.098 kg/m²)
(3) *Lightweight* — Basis weight of less than 10 lb/1000 ft² (0.05 kg/m²) and tissues regardless of basis weight

The following SI units were used for conversion of U.S. customary units:

1 lb = 0.45 kg
1 in. = 25 mm
1 ft = 0.3 m
1 ft² = 0.09 m²

The various types of papers normally found in each of the four major categories are provided in Table A.20.4.10.

EDUFIRE.IR

TABLE A.20.4.10 Paper Classification

Heavyweight	*Mediumweight*	*Lightweight*	*Tissue*
Linerboards	Bond and reproduction	Carbonizing tissue	Toilet tissue
Medium	Vellum	Cigarette	Towel tissue
Kraft roll wrappers	Offset	Fruit wrap	
Milk carton board	Tablet	Onion skin	
Folding carton board	Computer		
Bristol board	Envelope		
Tag	Book		
Vellum bristol board	Label		
Index	Magazine		
Cupstock	Butcher		
Pulp board	Bag		
	Newsprint (unwrapped)		

Paragraph A.20.4.10 applies to the classification of large rolls of paper stored on-end or on-side in piles greater than 10 ft (3.0 m) high. This type of paper storage is typically found in the finished goods storage warehouses at paper mills, in the raw stock storage warehouses of manufacturing plants that convert paper into finished products, or in other warehouses of similar occupancy. Fire experience and full-scale fire testing of this type of paper storage demonstrate unique burning characteristics that vary with the type of paper and the method of wrapping. The classifications for this type of paper storage are based on a series of full-scale and small-scale fire tests as described in A.20.4.10.

20.4.10.1 Heavyweight Class. Heavyweight class shall be defined so as to include paperboard and paper stock having a basis weight [weight per 1000 ft^2 (93 m^2)] of 20 lb (9.1 kg).

20.4.10.2 Mediumweight Class. Mediumweight class shall be defined so as to include all the broad range of papers having a basis weight [weight per 1000 ft^2 (93 m^2)] of 10 lb to 20 lb (4.5 kg to 9.1 kg).

20.4.10.3 Lightweight Class. Lightweight class shall be defined so as to include all papers having a basis weight [weight per 1000 ft^2 (93 m^2)] of 10 lb (4.5 kg).

20.4.10.4 Tissue.

20.4.10.4.1 Tissue shall be defined so as to include the broad range of papers of characteristic gauzy texture, which, in some cases, are fairly transparent.

20.4.10.4.2 For the purposes of this standard, tissue shall be defined as the soft, absorbent type, regardless of basis weight — specifically, crepe wadding and the sanitary class including facial tissue, paper napkins, bathroom tissue, and toweling.

20.4.11* Plastic Motor Vehicle Components. Group A plastic automotive components and associated packaging material consisting of exposed, expanded Group A plastic dunnage, instrument panels, and plastic bumper fascia shall be permitted to be protected as defined in Chapter 23.

A.20.4.11 Exposed, expanded Group A plastic dunnage, instrument panels, and plastic bumper facia were the automotive components with their related packaging that were utilized in the fire tests. This test commodity used in the large-scale sprinklered fire test proved to be the worst challenge per the large-scale calorimeter tests of available components. See *Technical Report of Fire Testing of Automotive Parts in Portable Storage Racking*, prepared by Underwriters Laboratories, Project 99NK29106, NC4004, January 5, 2001, and *Commodity Hazard Comparison of Expanded Plastic in Portable Bins and Racking*, Project 99NK29106, NC4004, September 8, 2000.

EDUFIRE.IR

N **20.4.12 Retail Display/Storage of Up to Cartoned Group A Plastics.** Group A plastics combined with Class I through IV in a retail/storage environment (big box retail) that combines customer picking areas with storage above within the retail area shall be permitted to be protected in accordance with retail display/storage of up to cartoned group A plastics in Chapter 20 to 23.

N **20.4.12.1 Baled Cotton.** A natural seed fiber wrapped and secured in industry-accepted materials, usually consisting of burlap, woven polypropylene, or sheet polyethylene, and secured with steel, synthetic or wire bands, or wire; also includes linters (lint removed from the cottonseed) and motes (residual materials from the ginning process) shall be protected as baled cotton in accordance with Chapter 21. *(See Table A.3.3.13.)*

N **20.4.13 Carton Records Storage.** A Class III commodity consisting predominantly of paper records in cardboard cartons shall be permitted to be protected as cartoned record storage in accordance with Chapters 21 or 23.

20.4.14 Mixed Commodities.

In many cases, fire testing for storage of mixed commodities has shown that a fire takes on the characteristics of the higher commodity. For that reason, the requirements of 20.4.14 were developed to provide guidance on choosing the appropriate commodity classification to govern sprinkler system design. Exhibit 20.9 shows a mixed commodity arrangement typical of any big-box home improvement store.

EXHIBIT 20.9 *Mixed Commodity Arrangement in a Retail Warehouse.*

20.4.14.1 Protection requirements shall not be based on the overall commodity mix in a fire area.

20.4.14.2 Unless the requirements of 20.4.14.3 or 20.4.14.4 are met, mixed commodity storage shall be protected by the requirements for the highest classified commodity and storage arrangement.

20.4.14.3 The protection requirements for the lower commodity class shall be permitted to be utilized where all of the following are met:

(1) Up to 10 pallet loads of a higher hazard commodity, as described in 20.4.1 through 20.4.7, shall be permitted to be present in an area not exceeding 40,000 ft^2 (3720 m^2).
(2) The higher hazard commodity shall be randomly dispersed with no adjacent loads in any direction (including diagonally).
(3) Where the ceiling protection is based on Class I or Class II commodities, the allowable number of pallet loads for Class IV or Group A plastics shall be reduced to five.

EDUFIRE.IR

20.4.14.4 Mixed Commodity Segregation. The protection requirements for the lower commodity class shall be permitted to be utilized in the area of lower commodity class, where the higher hazard material is confined to a designated area and the area is protected to the higher hazard in accordance with the requirements of this standard.

The fire area anticipated during sprinkler design is often mistakenly assumed to be the same as the sprinkler operating area. In fact, the fire area for successfully controlled storage fires seldom exceeds 200 ft^2 (18.6 m^2) during testing and often is less than 100 ft^2 (9.3 m^2). Regardless of the overall mix of commodities in a storage area, the possibility that 100 ft^2 to 200 ft^2 (9.3 m^2 to 18.6 m^2) of the highest hazard commodity will accumulate always exists.

FM Global has conducted tests to evaluate the effect of mixing commodities in rack storage. In one test, 20 ft (6.1 m) of storage, encompassing four tiers, consisted of the standard plastic commodity in the bottom tier and the standard Class II commodity in the top three tiers. The second test was similar to the first, except that the plastic commodity was located in the top tier rather than the bottom. In the third test, plastic and Class II commodities were homogeneously mixed in the rack. The results of the testing demonstrated that protection for plastic commodities was needed for all three cases.

N 20.5 Storage Arrangement.

N **20.5.1** General storage arrangements defined in this section shall be used to select the appropriate protection criteria in Chapters 21 through 25.

N **20.5.1.1** Other storage arrangements not covered by this section shall be considered outside the scope of this standard.

N **20.5.2 Movable Racks.** Rack storage in movable racks shall be protected in the same manner as multiple-row racks.

Movable racks are defined in 3.3.125 as racks on fixed rails or guides that can be moved back and forth only in a horizontal, two-dimensional plane. It is impossible to predict where the aisles might be located at any point in time, so these racks have to be protected in accordance with the rules for multiple-row racks. While not common with movable racks, if the overall width of the movable racks in the fully collapsed position is not more than the maximum allowed for a double-row rack of 12 ft (3.7 m) and has a minimum aisle width of 3.5 ft (1.1 m) separating the array, the arrangement might be considered a double-row rack arrangement.

Protection of movable racks is unlike that for portable racks (defined in 3.3.157), which are completely mobile and can be moved anywhere in a building. Protection for portable racks will depend on how many racks are in the facility and how the owner plans to move them around. Theoretically, portable racks can be protected like single-row, double-row, or multiple-row racks, depending on how they are moved. In the worst-case situation, portable racks would always be protected like multiple-row racks. But in many cases that would require in-rack sprinklers, which are impossible to install in racks that move around. So, a designer of sprinkler systems for facilities with portable racks should work with the building owner to understand how the racks will be moved and to convey any important limitations on how the racks can be positioned.

20.5.3* Rack Storage.

A.20.5.3 Many factors affect the protection of rack storage. Section 20.5.3 defined the variables that limit or change the available protection criteria found in Chapters 21 through 25. Paragraphs 20.5.3.1 through 20.5.3.3 identify the general terms of rack storage that identify which type of rack and shelving criteria is to be used in Chapters 21 through 25.

20.5.3.1 Shelving.

20.5.3.1.1 Shelving material that is less than 50 percent open, or placement of loads that block openings that would otherwise serve as the required flue spaces, greater than 20 ft^2 (1.9 m^2) in area shall be treated as solid shelf racks.

EDUFIRE.IR

20.5.3.1.2 Where multiple-row racks of any height have no longitudinal flue or where double-row racks with storage up 25 ft (7.6 m) in height have no longitudinal flue, the situation shall not be considered solid shelves where transverse flues exist at maximum 5 ft (1.5 m) intervals, and additional in-rack sprinklers shall not be required in accordance with 25.6.3.1 and 25.6.3.2.

20.5.3.2 Aisles.

20.5.3.2.1 Aisles required by Chapters 21 through 25 shall not be obstructed unless Chapters 21 through 25 include specific guidance allowing obstructions over the aisle.

20.5.3.3 Flues.

N **20.5.3.3.1 Longitudinal Flue Space.**

N **20.5.3.3.1.1** For Class I through IV and Group A plastic in double-row and multiple-row open racks, a longitudinal flue space shall not be required for storage up to and including 25 ft (7.6 m). *(See Section C.13.)*

C.13 [20.5.3.3.1.1] Test 80 was conducted to determine the effect of closing back-to-back longitudinal 6 in. (150 mm) flue spaces in conventional pallet racks. Test results indicated fewer sprinklers operating than with the flue space open, and, as such, no minimum back-to-back clearance is necessary if the transverse flue space is kept open.

Tests 145 and 146 were conducted to investigate the influence of longitudinal and transverse flue dimensions in double-row racks without solid shelves. Results were compared with Tests 65 and 66. Flue dimensions in Tests 65, 66, 145, and 146 were 6 in. (150 mm), 6 in. (150 mm), 3 in. (75 mm), and 12 in. (300 mm), respectively. All other conditions were the same.

In Tests 65 and 66, 45, and 48, sprinklers operated compared with 59 and 58 for Tests 145 and 146, respectively. Fire damage in Tests 145 and 146 was somewhat less than in Tests 65 and 66; 2100 ft^3 (59 m^3) and 1800 ft^3 (51 m^3) in Tests 145 and 146, respectively, versus 2300 ft^3 (65 m^3) and 2300 ft^3 (65 m^3) in Tests 65 and 66, respectively, of combustible material were consumed.

Test results indicate narrow flue spaces of about 3 in. (75 mm) allow reasonable passage of sprinkler water down through the racks.

Tests 96 and 107, on multiple-row racks, used 6 in. (150 mm) transverse flue spaces. The water demand recommended in the standard is limited to those cases with nominal 6 in. (150 mm) transverse flues in vertical alignment.

FAQ [20.5.3.3.1.1]

What purpose do flue spaces serve?

Flue spaces exert two primary influences on fires in racks. Flues allow a fire to spread vertically upward through a rack, which allows heat from a fire to rise up through the racks and activate the ceiling sprinklers. Flues also provide the path through which water from the ceiling sprinklers reaches a fire.

Where they exist, flue spaces need to extend vertically through the entire height of the rack. On the one hand, flue spaces help sprinklers activate and help get water down through the racks. On the other hand, they allow a fire to spread vertically, creating more challenge for the sprinklers at the ceiling. For some storage commodities and heights, horizontal barriers are necessary to block the flue spaces to limit vertical fire growth. In those cases, the horizontal barriers must be constructed in accordance with 25.7.1 and 25.7.2, and in-rack sprinklers must be installed under the barriers to protect storage that will not get water from the ceiling sprinklers.

In-rack sprinklers, which are crucial to fire control where they are installed, do not have a ceiling over them to bank down the heat from a fire. To open, they must be immersed in the hot gases from a fire. Fire experience has shown that in-rack sprinklers in aisle spaces wider than 24 in. (600 mm) might not open when needed to help control a fire.

Exhibit 20.10 illustrates the flue spaces required for a multiple-row rack arrangement consisting of aisles less than 3 ft (900 mm) in width.

Where flue spaces exist but are obstructed, are limited in number or size, or do not extend vertically through the entire height of the rack, fire development occurs primarily horizontally down the length of the rack and up along the rack face in the aisles, which can delay sprinkler operation. The final outcome is often a significant loss or complete destruction of the storage facility.

EDUFIRE.IR

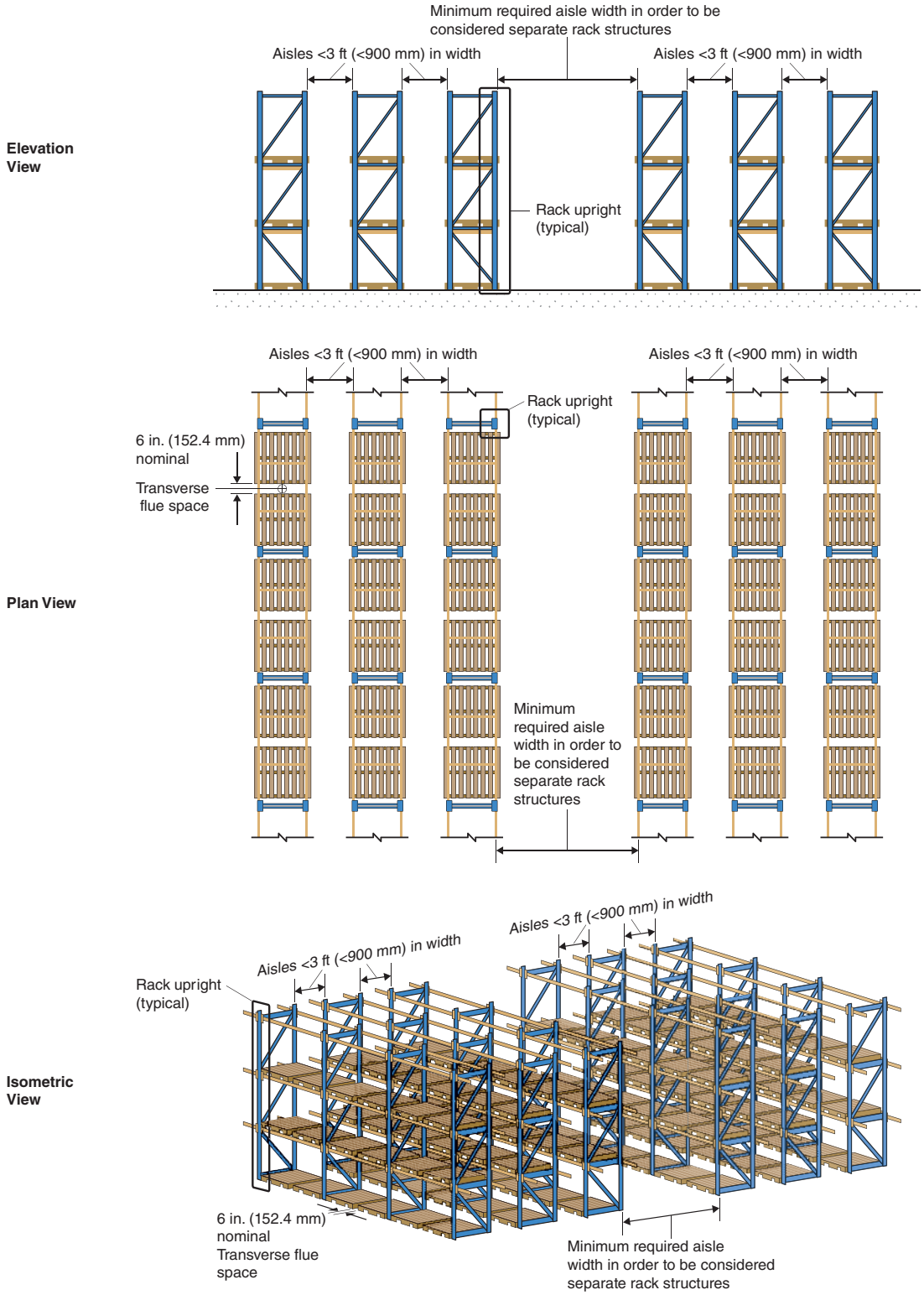

EXHIBIT 20.10 *Multiple-Row Rack Storage Arrangement Consisting of Aisle Widths Less Than 3 ft (900 mm): Elevation View, Plan View, and Isometric View. (Courtesy of Stephan Laforest)*

EDUFIRE.IR

N **20.5.3.3.1.2** For Class I through IV and Group A plastic nominal 6 in. (152.4 mm) longitudinal flue spaces shall be provided in double-row racks for storage over 25 ft (7.6 m).

See the commentary after 20.5.3.3.2.1 for the importance of maintaining the flue space between the rack uprights. The required width of the flue is designated as a nominal dimension rather than a hard minimum. That allows for variation in the available clear width of the flue space to accommodate such common items as in-rack sprinkler piping, rack upright members, and so forth.

FAQ [20.5.3.3.1.2]

Can narrow aisles be considered flue spaces?

Flue spaces need to be relatively narrow — 24 in. (600 mm) or less in width as defined by 3.3.116 — to ensure that in-rack sprinklers placed in the flue space actually get immersed in the flow of hot gases from the fire.

N **20.5.3.3.2 Transverse Flue Space.**

N **20.5.3.3.2.1** Nominal 6 in. (150 mm) transverse flue spaces between loads and at rack uprights shall be maintained in single-row, double-row, and multiple-row racks.

The requirement for a transverse flue (perpendicular to the aisle) at rack uprights typically is easier to maintain because storage loads are hard to place on the racks with the rack uprights in the way. However, that might not be the case at the top level of the rack where the uprights do not extend above the top of the rack, thus allowing the placement of a load over the top of the available flue space below.

The requirement to maintain transverse flue spaces between loads positioned between the rack uprights is generally much more difficult to maintain. It is tempting for owners and operators of storage facilities to place loads on their racks within the internal flue space, thereby blocking the available flue space.

Each of these flue spaces is extremely important. Without the space, fire can spread too far horizontally beneath the shielded storage loads. The heat is not allowed to move upward to initiate the timely activation of the ceiling sprinklers, which prevents effective penetration of sprinkler discharge once activated.

The required width of the flue is designated as a nominal dimension rather than a hard minimum. That allows for variation in the available clear width of the flue space to accommodate such common items as in-rack sprinkler piping, rack upright members, and so forth.

20.5.3.3.2.2 Random variations in the width of flue spaces or in their vertical alignment shall be permitted.

C.26 [20.5.3.3.2.2] During full-scale fire tests, flue space width and alignment are typically set with care for test consistency and repeatability. Some full-scale fire tests and fire experience have shown sprinkler protection designed and installed in accordance with this standard are able to tolerate random variations in flue width and vertical flue alignment. For example, see Test 7 in the National Quick Response Sprinkler Research Project: Large-Scale Fire Evaluation of Early Suppression Fast-Response (ESFR) Automatic Sprinklers (report available from the NFPA Research Foundation web site). For Test 7, transverse flue variations were substantial such that some flues at various tiers were completely closed (i.e., pallet loads placed immediately adjacent to each other), and the vertical alignment of one transverse flue was completely disrupted. The result was the operation of eight K14 (K200) ESFR sprinklers as well as minor aisle jump to both target racks. Reported damage was 2½ pallet loads in the main rack array and ¼ pallet load in the large racks. Findings such as Test 7 support the toleration of flue variations in the real world. However, ideally pallet loads should be positioned in racks with care to reduce the challenge faced by sprinklers should a fire occur.

Full-scale fire tests are usually conducted with vertically aligned flue spaces and the loads carefully placed on the racks to maintain that vertical alignment of the flue spaces from the bottom to the top of the rack.

Owners and operators of storage facilities rarely are so careful about putting the loads on the racks so that the flue spaces are in perfect vertical alignment. The requirement in 20.5.3.3.2.2 allowing random variations was added to the 2010 edition of NFPA 13 to discourage code enforcement officials from taking a plumb line from the top of the rack to the bottom and issuing citations for racks that are not perfectly aligned. To function as a flue, the opening needs to be continuous from the top to the bottom, but it does not need to be perfectly aligned.

20.5.4 Rubber Tires.

20.5.4.1 Water Supplies. Total water supplies shall be capable of providing flow for automatic sprinklers, hose streams, and foam systems (if provided) for the duration required in Table 20.12.2.6.

EDUFIRE.IR

The hose stream and duration demands shown in Table 20.12.2.6 for protecting rubber tires are much higher than those for Class I through Class IV commodities or Group A plastics due to the difficult nature of controlling fires in rubber tires.

20.5.5 Roll Paper.

Sections 21.7, 22.7, and 23.9 cover the requirements for the protection of roll paper depending on the type of ceiling sprinkler used. When protecting a storage occupancy consisting of large rolls of paper, the user should first review 20.5.5 for the general design criteria that apply. The user should then review Sections 21.7, 22.7, and 23.9 for the specific rules that apply to the roll paper storage.

Paper alone would normally be a Class III commodity and protected in accordance with Chapter 21 through Chapter 24, depending on the ceiling sprinkler chosen, or Chapter 25 if protected with in-rack sprinklers. But when paper is manufactured on large rolls, as shown in Exhibit 20.11, it becomes a much more difficult fire hazard. Fire can burrow into the roll, which shields the fire from the sprinkler discharge. The lighter the weight of the paper, the higher the degree to which the fire can burrow into the roll.

Before deciding whether the rules of Sections 21.7, 22.7, or 23.9 apply, the user must determine whether the roll paper storage meets the definition of *miscellaneous storage* in 3.3.123. If it does, the storage could be protected in accordance with Sections 4.3.1.4, 4.3.4, and 4.3.5 with allowable modifications from Chapter 19 rather than any portion of Chapter 20 and Sections 21.7, 22.7, and 23.9. In the case of roll paper storage, the miscellaneous storage protection from Sections 4.3.4 and 4.3.5 can go up only as high as 10 ft (3.0 m). Even if the roll paper storage meets the general definition of *miscellaneous storage*, if it is over 10 ft (3.0 m) high, it must be protected in accordance with Chapter 19 and Sections 21.7, 22.7, or 23.9.

20.5.5.1* Protection Criteria for Roll Paper Storage.

A.20.5.5.1 These special designs are based on fire heat release calorimeter tests and 11 full-scale tests conducted by the Retail Fire Research Coalition at Underwriters Laboratories in 2000 and 2007. *[See Figure A.20.5.5.1(a) through Figure A.20.5.5.1(f).]*

EXHIBIT 20.11 *Roll Paper Storage. (© Shutterstock.com/safakcakir)*

EDUFIRE.IR

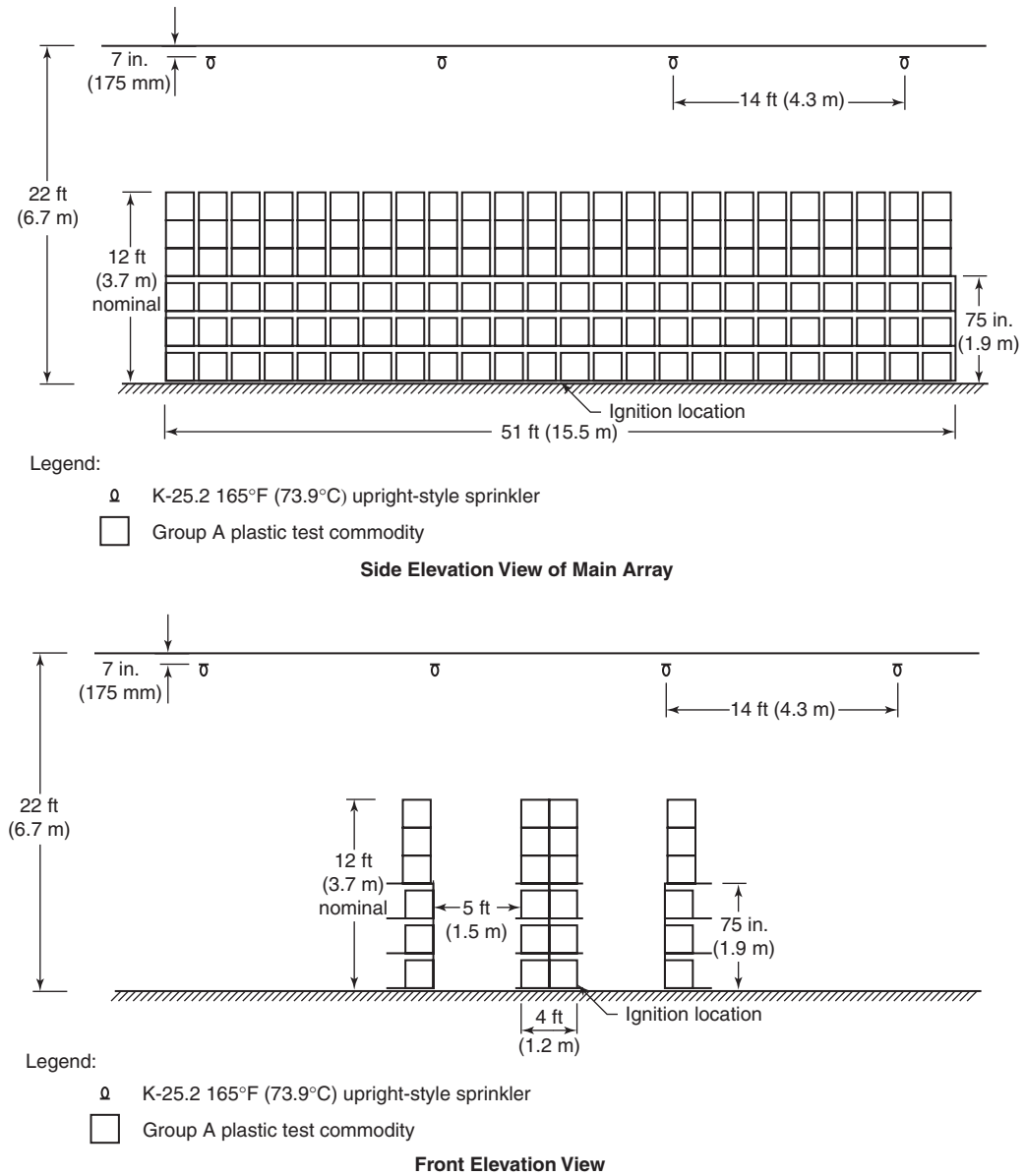

FIGURE A.20.5.5.1(a) *Fire Test A1.*

20.5.5.2 Wet pipe systems shall be used in tissue storage areas.

Dry pipe systems are not permitted to be used to protect tissue paper because there is an inherent delay in the delivery of water on a fire. It takes time for the air to evacuate the system and for the water to flow from the dry pipe valve to the open sprinklers. During that delay, a tissue paper fire can burn so deeply into the array that when the water is discharged from the sprinklers it might not be able to control the fire. Tissue paper is the only paper that allows the fire to develop so fully. Other types of roll paper are allowed to be protected with dry pipe systems using all the following:

- Table 21.7.3(a) and Table 21.7.3(b) with the required 30 percent design area increase as provided by 20.13.3
- The provisions of 21.7.1 or 21.7.2 with the required 30 percent increase required by 19.3.3.2.5
- Table 22.7 for CMSA sprinklers with the selected dry system criteria

ESFR sprinklers are not permitted to be used on a dry system.

EDUFIRE.IR

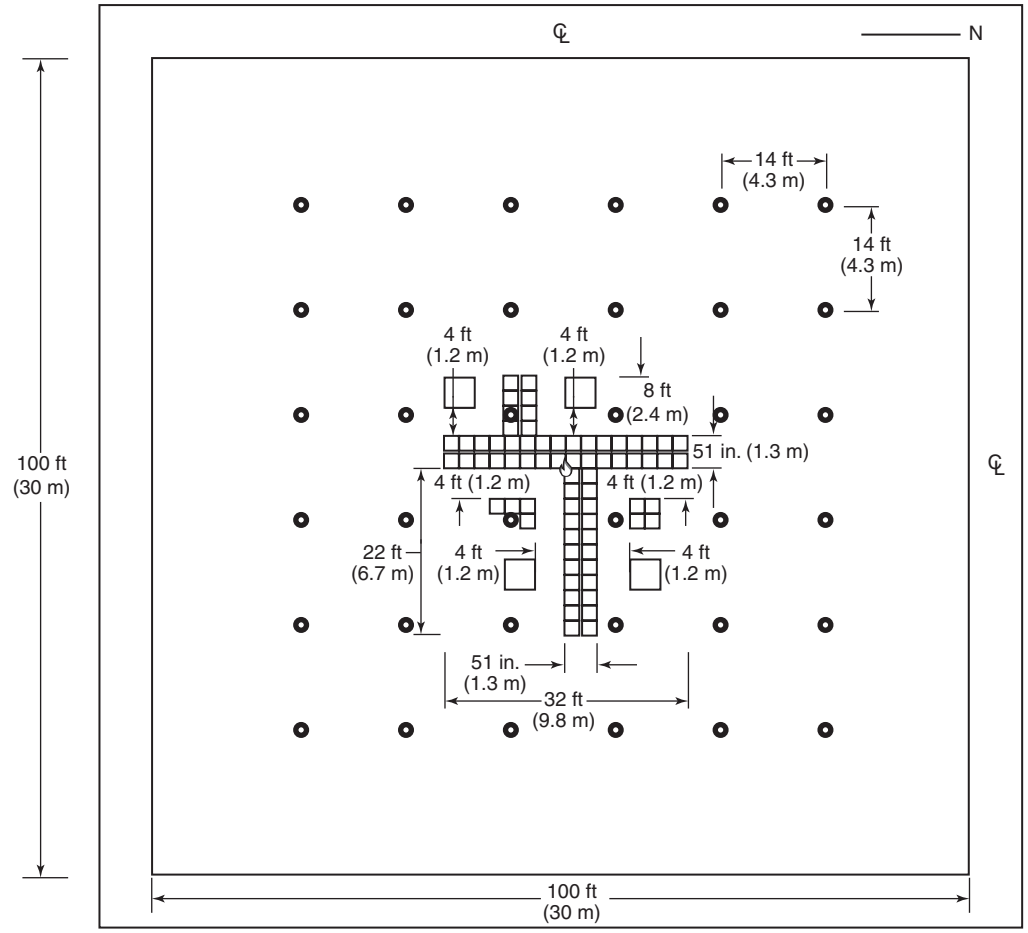

Shelving suspended on wire uprights at 24 in. (600 mm), 48 in. (1200 mm), 72 in. (1800 mm), 96 in. (2400 mm), and 120 in. (3000 mm) with a wire shelf at 148 in. (3.7 m)

Legend:

- K-25.2 upright-style sprinkler 165°F (73.9°C) QR, 0.55 gpm/ft^2 (122.4 mm/min/m^2) water density for first four sprinkler operations, then 0.49 gpm/ft^2 (20 mm/min/m^2) for all additional operations
- Group A plastic test commodity
- Class II target commodity
- Ignition location

Plan View

FIGURE A.20.5.5.1(b) *Fire Test A2.*

20.5.5.2.1 The water supply design shall include the demand of the automatic sprinkler system plus the hose stream allowance plus, where provided, the high-expansion foam system for the duration specified in Table 20.12.2.6.

20.5.5.3 Horizontal storage of heavyweight or mediumweight paper shall be protected as a closed array.

Fire tests conducted on vertical storage of roll paper in a closed array produced a relatively slow-developing fire that required a relatively small sprinkler system discharge density and area of operation to achieve fire control. A closed paper array is an array in which the distance between paper columns in all directions is small — that is, not more than 2 in. (50 mm) — as shown in Exhibit 20.12. The slow fire development is due

EDUFIRE.IR

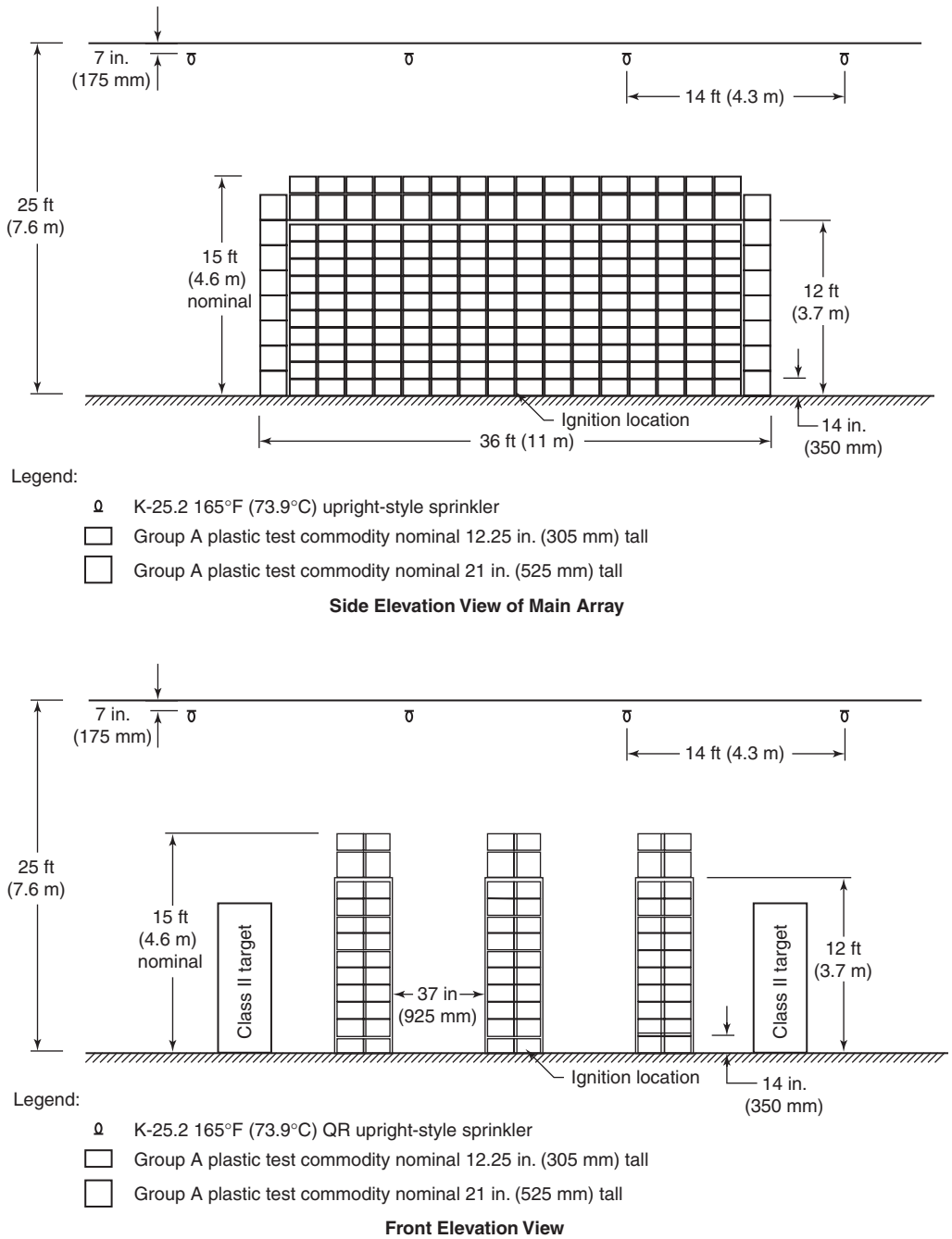

FIGURE A.20.5.5.1(c) *Fire Test A3.*

to the limited size of the flue spaces between paper rolls. Horizontal (nested) storage of paper rolls, shown in Exhibit 20.13, also minimizes the size of the flue spaces in the horizontal direction, which tends to limit fire growth. See the definitions of *array (rolled paper)* terms in 3.3.8.2, 3.3.8.4, and 3.3.8.5 for further details.

20.5.5.4 Mediumweight paper shall be permitted to be protected as heavyweight paper where wrapped completely on the sides and both ends, or where wrapped on the sides only with steel bands. Wrapping material shall be either a single layer of heavyweight paper with a basis

EDUFIRE.IR

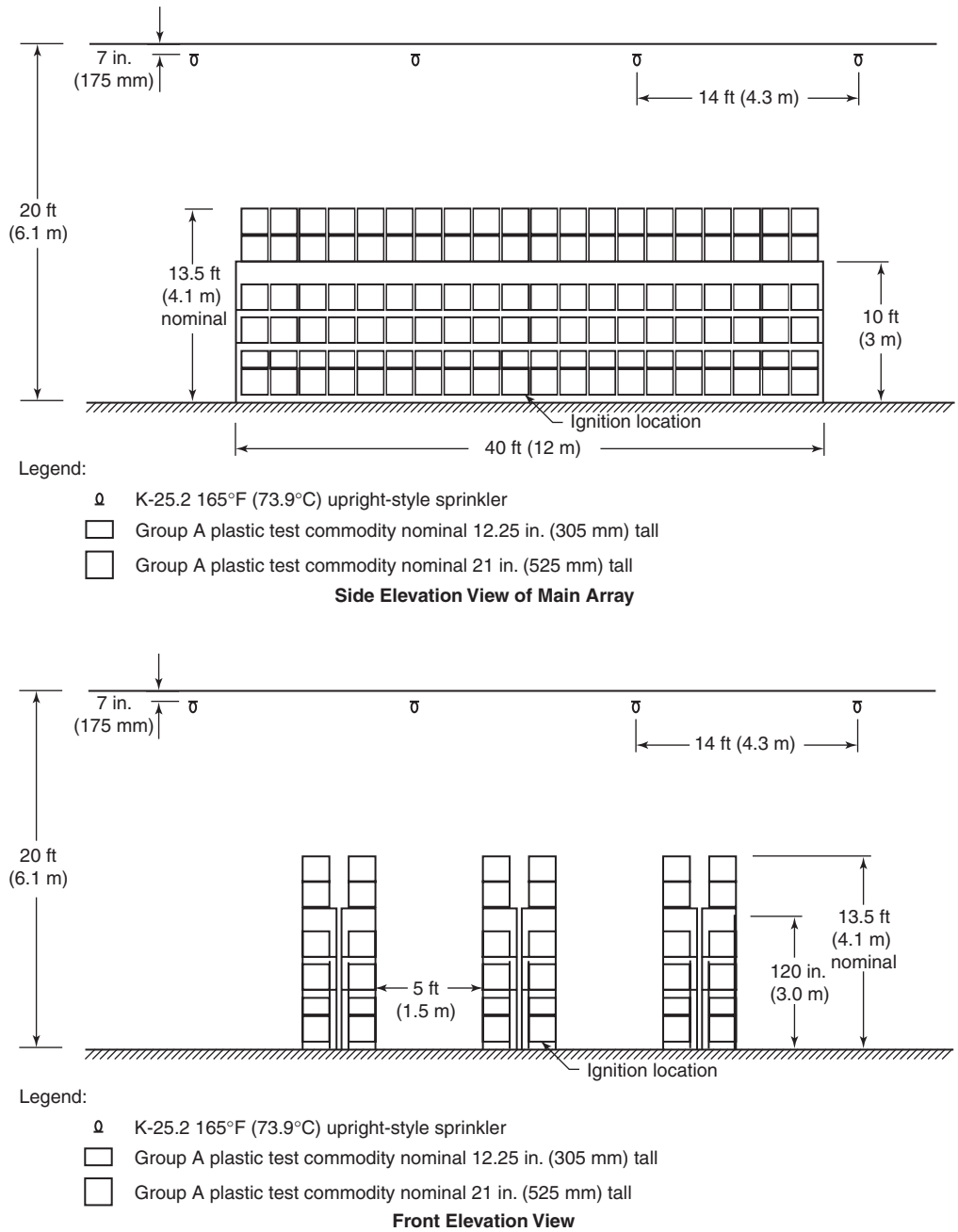

FIGURE A.20.5.5.1(d) *Fire Test A4.*

weight of 40 lb (18.1 kg) or two layers of heavyweight paper with a basis weight of less than 40 lb (18.1 kg).

Fire tests conducted on roll paper storage demonstrate that the exposed outer sheet of the paper rolls is the critical factor in determining the requirements for the sprinkler system. Where heavyweight paper is used as an outer protective wrapper on mediumweight newsprint and writing papers, it makes it more difficult for the fire to burrow into the roll. Where the fire burns only along the surface of the roll, it is easier for the sprinklers to control or suppress the fire. When mediumweight papers were wrapped in heavyweight

EDUFIRE.IR

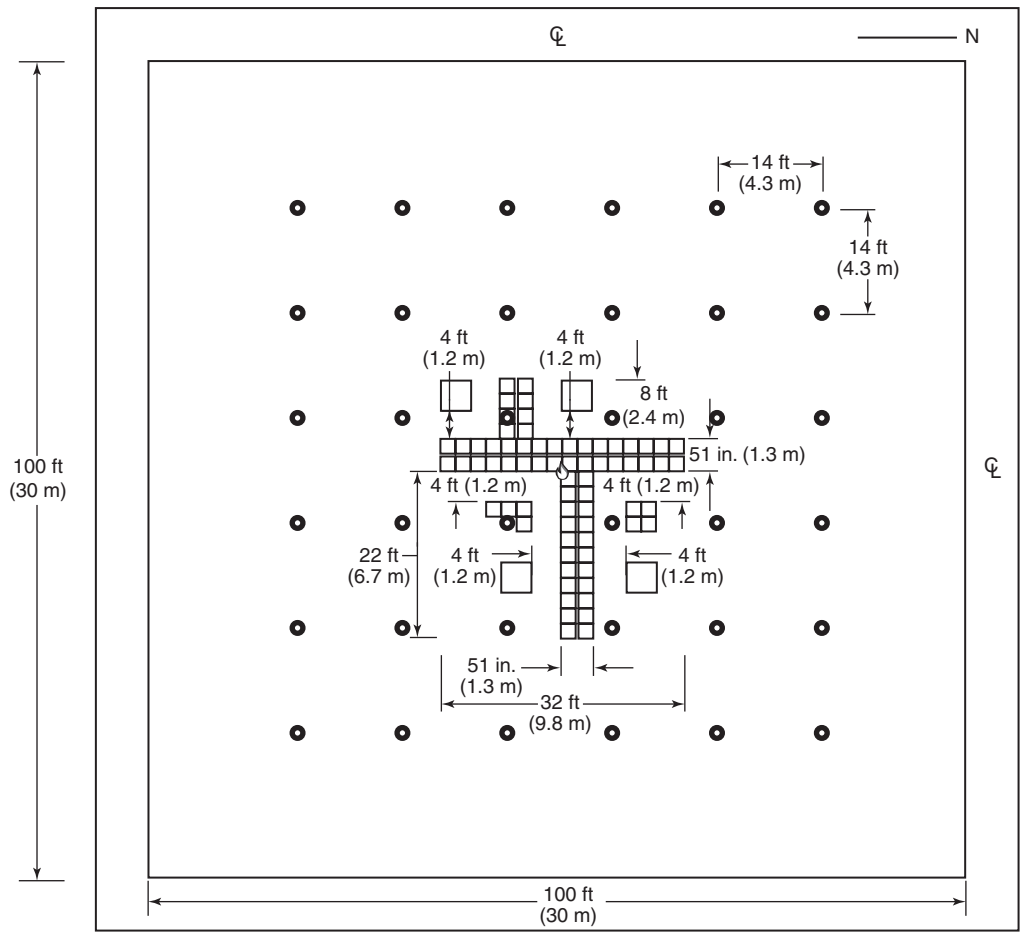

FIGURE A.20.5.5.1(e) *Fire Test A6 — Plan View.*

paper for testing, sprinkler systems designed to protect heavyweight paper successfully controlled the fire. (See 20.4.10 for a description of paper classifications.) Furthermore, when heavyweight wrappers were used on lightweight tissue rolls, successful control of the fire was achieved by sprinkler systems designed to protect mediumweight paper.

20.5.5.5 Lightweight paper or tissue paper shall be permitted to be protected as mediumweight paper where wrapped completely on the sides and both ends, or where wrapped on the sides only with steel bands. Wrapping material shall be either a single layer of heavyweight paper with a basis weight of 40 lb (18.1 kg) or two layers of heavyweight paper with a basis weight of less than 40 lb (18.1 kg).

EDUFIRE.IR

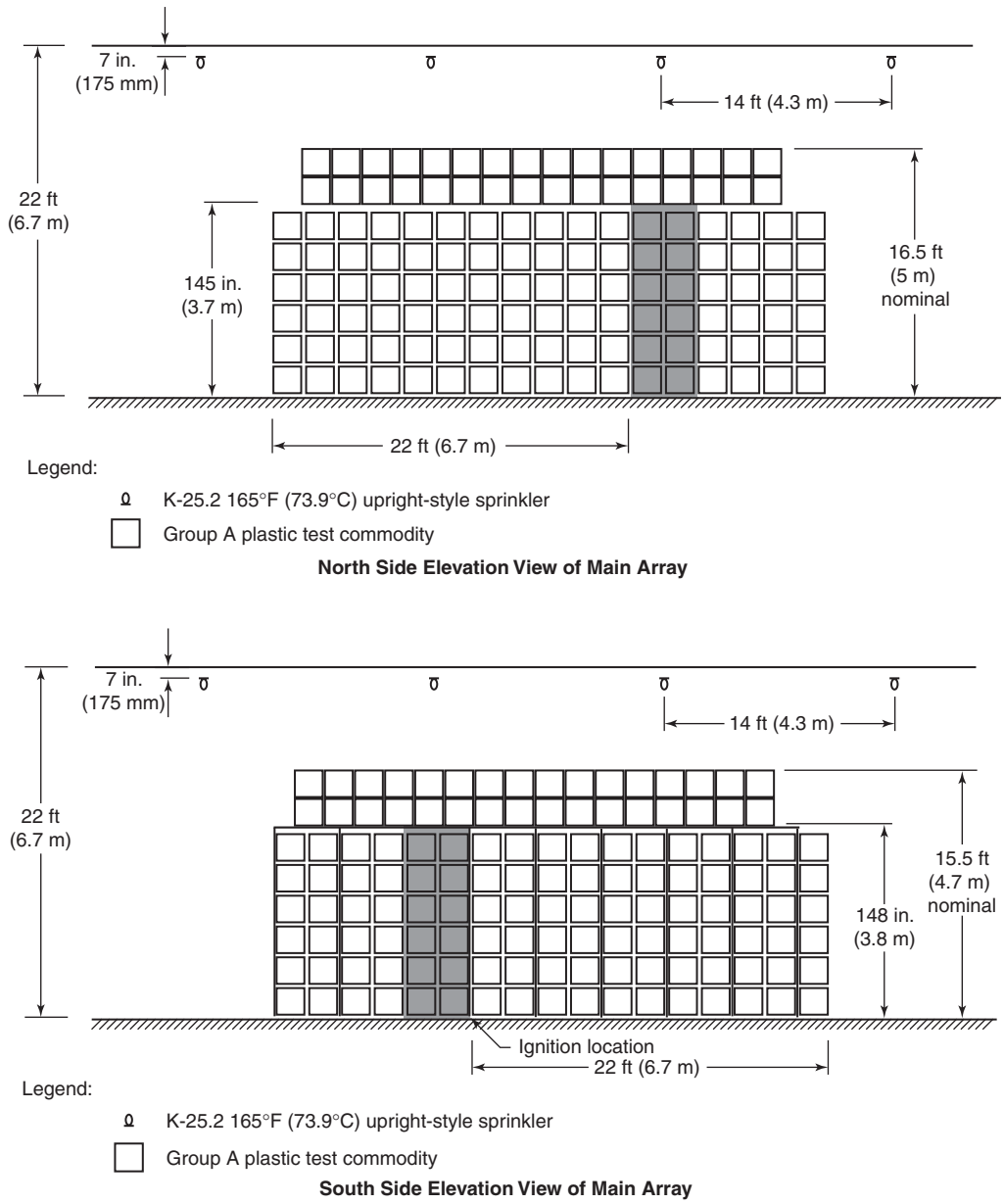

FIGURE A.20.5.5.1(f) *Fire Test A6 — Main Array (North/South).*

20.5.5.6 For purposes of sprinkler system design criteria, lightweight class paper shall be protected as tissue.

N **20.5.6 Plastic Motor Vehicle Components.** Group A plastic automotive components and associated packaging material consisting of exposed, expanded Group A plastic dunnage, instrument panels, and plastic bumper fascia shall be permitted to be protected as defined in Chapter 23.

Section 23.10 provides requirements for the protection of large exposed expanded plastic automotive components such as instrument panels. To use these criteria, K-25.2 (360) ESFR sprinklers are required.

EDUFIRE.IR

EXHIBIT 20.12 Closed Paper Roll Vertical Storage Array. (© Dreamstime.com/Bernardo Varela)

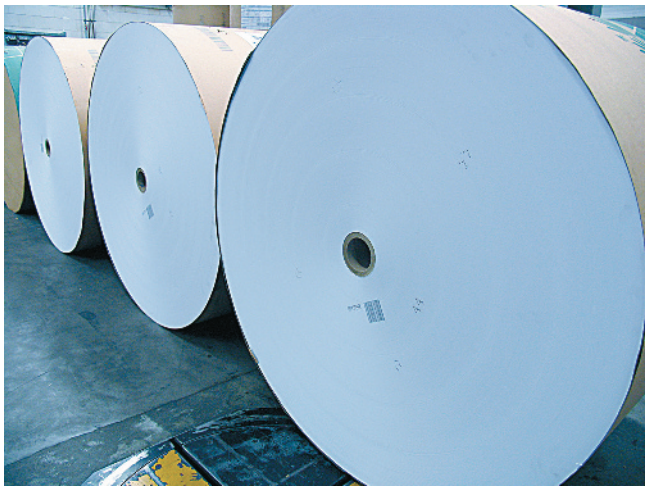

EXHIBIT 20.13 Horizontal (Nested) Storage of Paper Rolls. (© Dreamstime.com/I-bag)

20.5.6.1 Automotive components covered in this section shall not include the storage of air bags, tires, and seats on portable racks.

20.6 Building Construction and Storage: Heights and Clearance.

20.6.1 Ceiling Slope. The sprinkler system criteria specified in Chapters 20 through 25 are intended to apply to buildings with ceiling slopes not exceeding 2 in 12 (16.7 percent) unless modified by a specific section in Chapters 20 through 25.

All the testing used to develop storage protection requirements was done under flat roofs. A 1:6 scale model of a full-scale test facility was used to investigate the effects of varying ceiling slopes. The investigations indicated that sprinkler operating patterns and sequences are not adversely affected where slopes do not exceed 2 in 12 (16.7 percent). Where the slope exceeds 16.7 percent, the sprinkler operating area and sequence can be skewed. Unless the fire occurs directly under a row of sprinklers, sprinklers nearest the fire might not operate. Heat from the fire will collect at the peak and result in the operation of an excessive number of sprinklers and loss of fire control. Addressing design criteria for storage facilities with ceiling slopes in excess of 2 in 12 has been identified as a critical need by the Sprinkler Research Council of the Fire Protection Research Foundation (FPRF).

For storage buildings that have sloped ceilings greater than 16.7 percent, criteria could be developed in a number of ways. Full-scale fire tests could be conducted using the roof arrangement and commodity being stored to develop protection criteria, or an engineer could perform a computational fluid dynamics/dynamic heat transfer analysis to determine how many sprinklers might open in a fire and how large the fire might be when sprinklers over the fire opened. Using that information, the engineer could determine discharge criteria, including the number and location of open sprinklers and the flow and pressure needed to discharge from those sprinklers to control or suppress the fire. It is likely that such an analysis would show a skewed operating pattern of sprinklers up the slope of the roof and along the peak. For roofs with short distances along the slope (less than 1.2 times the square root of the horizontal design area), the skew would not be expected to be as great.

A good example of this concept is the construction type commonly referred to as "saw-tooth roof," in which generally only two or three sprinklers run up a section of roof with a slope greater than 16.7 percent.

FAQ [20.6.1]

What are the design criteria for storage buildings that have ceiling or roof slopes greater than 2 in 12 (16.7 percent)?

The design criteria for storage buildings having ceiling or roof slopes exceeding 2 in 12 (16.7 percent) are outside the scope of Chapter 20 through Chapter 25.

EDUFIRE.IR

These sprinklers can be calculated as if all the sprinklers running up the slope will operate for the width of the hydraulically remote area. Experienced judgment will have to be used for small portions of the ceiling or roof that exceed a 16.7 percent slope.

20.6.2* Building and Storage Height.

A.20.6.2 The fire protection system design should consider the maximum storage height. For new sprinkler installations, maximum storage height is the usable height at which commodities can be stored above the floor while the minimum required unobstructed space below sprinklers is maintained. Where evaluating existing situations, maximum storage height is the maximum existing storage height if space between the sprinklers and storage is equal to or greater than that required.

Building heights where baled cotton is stored should allow for proper clearance between the pile height and sprinkler deflectors. Fire tests of high-piled storage have shown that sprinklers are generally more effective if located 1½ ft to 4½ ft (0.45 m to 1.4 m) above the storage height.

20.6.2.1 The maximum building height shall be measured to the underside of the roof deck or ceiling in the storage area or in accordance with 20.6.2.4.1 through 20.6.2.4.2.

20.6.2.2 For corrugated metal deck roofs up to 3 in. (75 mm) in depth, the maximum roof height shall be measured from floor to the bottom of the deck.

See Exhibit 20.14 for an example of how to calculate the clearance to ceiling for a corrugated metal deck that is 3 in. (75 mm) or less in depth. See Exhibit 20.15 for an example of how to calculate the clearance to ceiling for a corrugated metal deck that is greater than 3 in. (75 mm) in depth.

20.6.2.3 For decks deeper than 3 in. (75 mm), the maximum roof height shall be measured to the highest point on the deck.

20.6.2.4 For ceilings that have insulation installed directly against underside of the ceiling or roof structure, the maximum roof height shall be measured to the bottom of insulation and shall be in accordance with 20.6.2.4.1 or 20.6.2.4.2.

20.6.2.4.1 For insulation that is installed directly against the ceiling or roof structure and is installed flat and parallel to the ceiling or roof structure, the maximum roof height shall be measured to the underside of the insulation.

20.6.2.4.2 For insulation that is installed in a manner that causes it to deflect or sag down from the ceiling or roof structure, the maximum roof height shall be measured as half of the

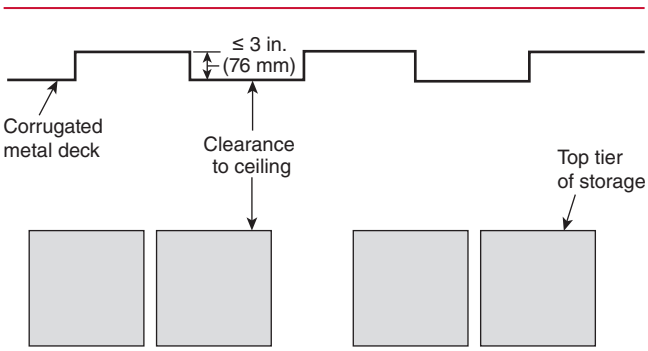

EXHIBIT 20.14 Building Height/Clearance to Ceiling with Corrugated Deck 3 in. (75 mm) or Less in Depth.

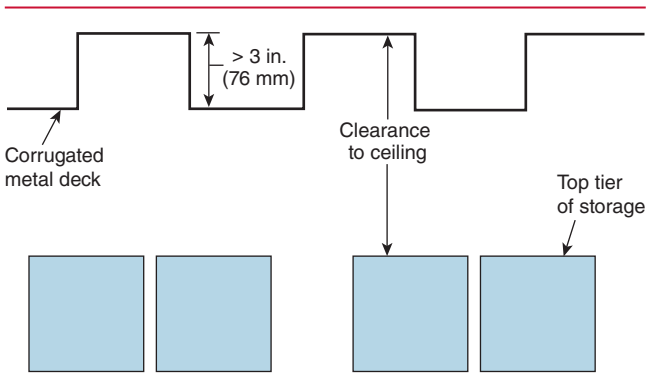

EXHIBIT 20.15 Building Height/Clearance to Ceiling with Corrugated Deck Greater than 3 in. (75 mm) in Depth.

EDUFIRE.IR

distance of the deflection from the insulation high point to the insulation low point. If the deflection or sag in the insulation exceeds 6 in. (150 mm), the maximum roof height shall be measured to the high point of the insulation.

As long as the insulation in a building is attached to the roof or ceiling in such a manner that it will stay in place during the early stages of a fire, the bottom of the insulation effectively becomes the top of the space for the purposes of measuring the distance from the top of storage to the ceiling. See Exhibit 20.16 for an example of measuring the clearance to ceiling where insulation is tight (and parallel) to the ceiling. See Exhibit 20.17 for an example of sagging insulation with 6 in. (150 mm) or less of sag; see Exhibit 20.18 for insulation with more than 6 in. (150 mm) of sag.

20.6.2.5* Where the building height changes within a compartment, the sprinklers directly over the storage shall be capable of protecting storage directly beneath.

A.20.6.2.5 In the example shown in Figure A.20.6.2.5, the maximum ceiling height shown is 30 ft (9.1 m). Sprinkler protection under the highest part of the ceiling must be designed for that height to a point at least 15 ft (4.6 m) beyond where the ceiling height drops to 25 ft (7.6 m). Sprinkler protection beyond that point can be designed for a 25 ft (7.6 m) ceiling.

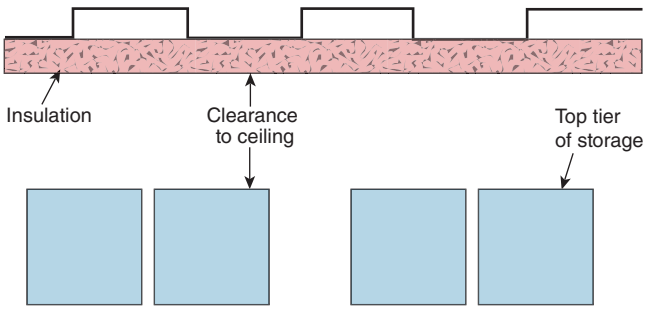

EXHIBIT 20.16 Building Height/Clearance to Ceiling with Insulation Tight to Ceiling.

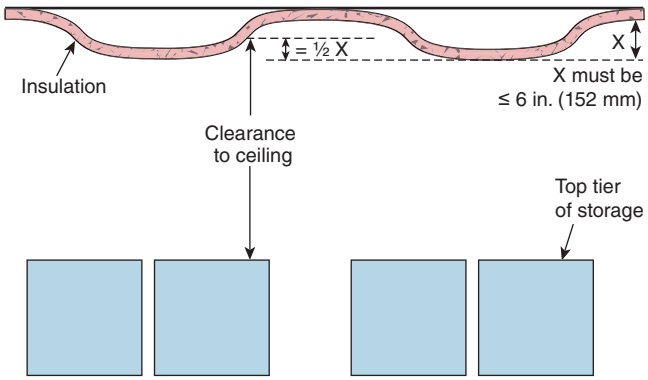

EXHIBIT 20.17 Building Height/Clearance to Ceiling with Insulation Sagging 6 in. (150 mm) or Less.

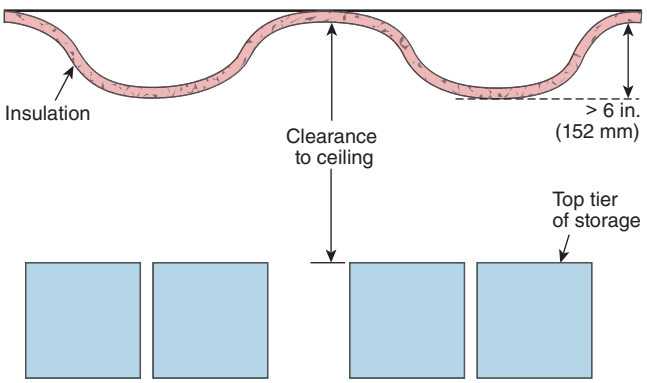

EXHIBIT 20.18 Building Height/Clearance to Ceiling with Insulation Sagging More than 6 in. (150 mm).

EDUFIRE.IR

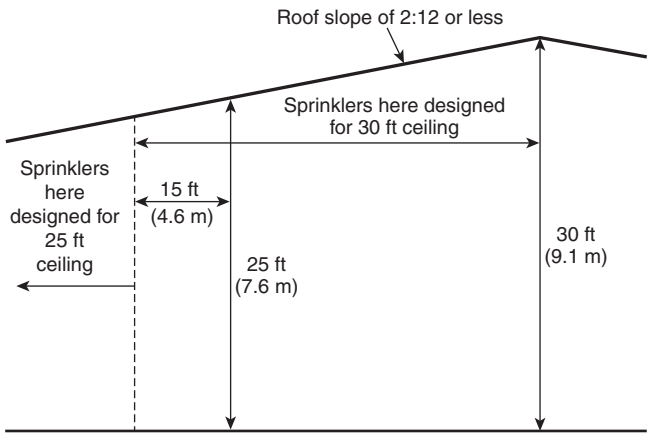

FIGURE A.20.6.2.5 *Extended Sprinkler Coverage Under Sloped Ceilings.*

20.6.2.5.1 Where a barrier to heat and smoke in accordance with 20.10.1(2) or 20.10.1(3) is not present, the sprinkler criteria 15 ft (4.6 m) into the perimeter of the lower ceiling area shall be the same as the sprinkler protection for the high ceiling area.

Unless a draft curtain or barrier is provided to prevent the spread of heat up the slope of the roof as provided by 20.10.1(2) or 20.10.1(3), the measurement of the height of the roof deck for storage under a sloped roof (not greater than 2 in 12, or 16.7 percent) must be measured at a distance of 15 ft (4.6 m) horizontally from the edge of the storage in the direction of upward slope. See Figure A.20.6.2.5. If a draft curtain or barrier is installed, the height of the building should be measured at the point of installation of such draft curtain or barrier.

20.6.2.6 ESFR sprinklers shall be used only in buildings equal to, or less than, the height of the building for which they have been listed.

ESFR sprinklers are tested and listed to protect buildings of specific heights as outlined in the tables in Chapter 20 and Chapter 23. It is not reasonable to extrapolate the use of ESFR sprinklers beyond those specific ceiling heights without test data to prove that the sprinklers will operate as designed. If a building owner who has a building taller than what can be protected with ESFR sprinklers wants to use ESFR sprinklers, the only option is to install a drop ceiling at the height permitted for ESFR sprinklers and install the sprinklers under the drop ceiling. The tiles of the drop ceiling would need to be maintained in place and would need to be substantial enough (or physically held) to stay in place during a fire event. The rising fire plume above a storage fire can represent a significant buoyant force that must be resisted by the installed ceiling panels. A design force of 3 lb/ft^2 (14.4 kg/m^2) should be considered as being sufficient to resist such forces.

The protection criteria for ESFR sprinklers are based on the actual maximum ceiling height, not the average ceiling height. For the example in the previous paragraph, one option would be to follow the ESFR criteria for a 45 ft (13.7 m) high ceiling throughout the building. A potential alternative would be to use the 45 ft (13.7 m) ESFR criteria from the 42 ft (12.8 m) peak to the location 15 ft (4.6 m) beyond the 40 ft (12.2 m) ceiling height, then use the 40 ft (12.2 m) ESFR criteria for the remainder of the ceiling height to the edge of the building. The location 15 ft (4.6 m) beyond is recognized by 20.10.1 to provide adequate coverage of a higher design protocol to separate a lower design without the use of physical separations.

N **20.6.3 Storage Height.**

N **20.6.3.1** The sprinkler system design shall be based on the storage height that routinely or periodically exists in the building and creates the greatest water demand.

N **20.6.3.2** Where storage is placed above doors, the storage height shall be calculated from the base of storage above the door.

EDUFIRE.IR

The quantity of materials in a storage occupancy constantly changes during the use of the building. The sprinkler system needs to be able to handle the reasonable worst-case combination of storage height and clearance that might occur in the building. The higher storage height is not always the worst-case design. For certain high-challenge fuels (such as Group A plastics), a lower storage height with a greater distance to the ceiling creates a more challenging fire for the sprinklers to fight than a taller storage height with a smaller distance to the ceiling. This is because the situation with the greater clearance requires the water droplet from the sprinkler to travel farther through the vertical fire plume to get to the fire, making it more difficult for low-quality droplets to get to the seat of a fire. Therefore, it is incumbent on the designers of sprinkler systems to consider all the combinations of storage heights and clearances and to make sure that they design for the reasonable worst-case scenario that will occur in a building.

It is common for owners and operators of warehouse occupancies to want to use all the space in the building, including the space above the doors. Frequently, the space above the doors is used for idle pallet storage, but it can also be used for product storage. Where the space above a door is used for storage, NFPA 13 does not require the user to protect the storage as if it went all the way to the floor. Instead, NFPA 13 allows the user to start measuring from the locations where the storage starts above the door. This concept is premised on the space below not being used for storage. For example, in a warehouse that is 30 ft (9.1 m) high with 15 ft (4.6 m) high doors, a 5 ft (1.5 m) high stack of idle wood pallets would be considered 5 ft (1.5 m) of storage, even though the top of the pallets would be 20 ft (6.1 m) above the floor.

20.6.4 Clearance to Ceiling.

Subsection 20.6.4 clarifies the concept of "clearance to ceiling," which should not be confused with "clearance." The term *clearance* is the distance from the top of storage to the sprinkler deflector. The term *clearance to ceiling* is the distance from the top of storage to the ceiling or roof deck. Depending on the type of ceiling construction, the difference between the clearance and the clearance to ceiling could be as much as 22 in. (550 mm). Paragraphs 20.6.4.1 through 20.6.4.5 describe how to measure the clearance to the ceiling for different roof/ceiling configurations.

20.6.4.1* The clearance to ceiling shall be measured in accordance with 20.6.4.1.1 through 20.6.4.1.3.

A.20.6.4.1 Batt insulation creates an effective thermal barrier and can be considered the ceiling/roof deck when determining the clearance to ceiling. The insulation needs to be installed in each pocket (not just above the sprinkler) and attached to the ceiling/roof in such a manner that it will not fall out during a fire prior to sprinkler activation.

20.6.4.1.1 For corrugated metal deck roofs up to 3 in. (75 mm) in depth, the clearance to ceiling shall be measured from the top of storage to the bottom of the deck.

See Exhibit 20.14 for an example of how to calculate the building height/clearance to ceiling for a corrugated metal deck that is 3 in. (75 mm) or less in depth. See Exhibit 20.15 for an example of how to calculate the building height/clearance to ceiling for a corrugated metal deck that is greater than 3 in. (75 mm) in depth.

20.6.4.1.2 For corrugated metal deck roofs deeper than 3 in. (75 mm), the clearance to ceiling shall be measured to the highest point on the deck.

20.6.4.1.3 For ceilings that have insulation attached directly to underside of the ceiling or roof structure, the clearance to ceiling shall be measured from the top of storage to the bottom of the insulation and shall be in accordance with 20.6.4.1.3(A) or 20.6.4.1.3(B).

(A) For insulation that is attached directly to the ceiling or roof structure and is installed flat and parallel to the ceiling or roof structure, the clearance to ceiling shall be measured from the top of storage to the underside of the insulation.

(B) For insulation that is installed in a manner that causes it to deflect or sag down from the ceiling or roof structure, the clearance to ceiling shall be measured from the top of storage to a point half of the distance of the deflection from the insulation high point to the insulation low point. If the deflection or sag in the insulation exceeds 6 in. (150 mm), the clearance to ceiling shall be measured from the top of storage to the high point of the insulation.

EDUFIRE.IR

As long as the insulation in a building is attached to the roof or ceiling in such a manner that it will stay in place during the early stages of a fire, the bottom of the insulation effectively becomes the top of the space for the purposes of measuring the distance from the top of storage to the ceiling. See Exhibit 20.16 for an example of measuring the clearance to ceiling where insulation is tight (and parallel) to the ceiling. See Exhibit 20.17 for an example of sagging insulation with 6 in. (150 mm) or less of sag; see Exhibit 20.18 for insulation with more than 6 in. (150 mm) of sag.

20.6.4.2 For CMDA criteria where the clearance to ceiling exceeds those identified in Table 20.6.4.2, the requirements of Table 20.6.4.3 and Table 20.6.4.4 shall apply.

TABLE 20.6.4.2 *Maximum Clearance from Top of Storage to Ceiling for CMDA Protection Criteria*

Commodity	*Class I to IV*	*Group A Plastic*
Palletized, solid-piled, bin box, shelf, or back-to-back shelf storage	20 ft (6.1 m)	20 ft (6.1 m)
Rack storage up to 25 ft (7.6 m)	20 ft (6.1 m)	10 ft (3.1 m)
Rack storage >25 ft (7.6 m)	10 ft (3.1 m)	10 ft (3.1 m)

The concern over excessive clearance exists with all types of sprinklers; however, 20.6.4.2 applies only to situations where spray sprinklers are used.

Excessive clearance to ceiling distances will affect a sprinkler's performance in two ways. First, as the clearance increases, the size of the fire will increase before the ceiling sprinklers operate. Second, as the clearance increases, the fire plume that the sprinkler discharge must penetrate to reach the burning materials also increases. Those two factors together can significantly reduce the effectiveness of sprinklers. Implicit in storage protection requirements is that protection for a given storage height in a building of a given height must also be adequate to protect any lesser storage height in that building. This requirement becomes necessary because warehouses are never completely full, and storage heights can fluctuate widely in both the short term and the long term.

N **20.6.4.3** Protection of Class I through Class IV commodities using CMDA criteria that exceed the maximum allowable clearance in Table 20.6.4.2 shall be in accordance with Table 20.6.4.3.

N ***TABLE 20.6.4.3*** *Class I Through Class IV Commodities*

Storage Configuration	*Where the clearance to ceiling exceeds*	*Protection is based upon the storage height that would result in a clearance to ceiling of…*	*In-rack Sprinklers**
Palletized, solid-piled, bin box, shelf, or back-to-back shelf storage	20 ft (6.1 m)	20 ft (6.1 m)	N/A
Rack storage up to and including 25 ft (7.6 m) in height	20 ft (6.1 m)	20 ft (6.1 m)	Permitted as alternative to presumed clearance of 20 ft (6.1 m)
Rack storage over 25 ft (7.6 m) in height	10 ft (3.1 m)	10 ft (3.1 m)	Permitted as alternative to presumed clearance of 10 ft (3.1 m)

*When applying the supplemental in-rack sprinkler option, the ceiling density is based upon the given storage height with an assumed acceptable clearance to ceiling. Provide one level of supplemental, quick response in-rack sprinklers located directly below the top tier of storage and at every flue space intersection.

EDUFIRE.IR

For the protection of commodities in palletized, solid-piled, bin box, shelf, or back-to-back shelf storage arrangements with spray sprinklers (as covered in Chapter 21), the user is not always given maximum ceiling heights. Therefore, the user has to assume that the maximum distance of the ceiling above the top of storage will be 20 ft (6.1 m). This means that in a building with a 45 ft (14 m) ceiling height, if there is going to be only 20 ft (6.1 m) of storage, the sprinkler system still will need to be designed to handle 25 ft (7.6 m) of storage to meet the maximum 20 ft (6.1 m) ceiling clearance rule. The intent is to increase the sprinkler system discharge to help the water droplets better penetrate the fire plume when the greater clearances exist.

There are circumstances where this criterion cannot be applied. Consider the proposed shelf storage of a Class I through IV encapsulated commodity to 15 ft (4.6 m) under a 40 ft (12 m) roof deck. Based on the provisions of 20.6.4, an assumed storage height of 20 ft (6.1 m) would have to be considered for development of the design criteria; however, because 21.2.1(3) only allows for storage of up to 15 ft (4.6 m) for encapsulated shelf storage of Class I through IV commodity, no available protection criteria would be available for the 20 ft (6.1 m) assumed storage height, placing the proposed storage method outside the scope of NFPA 13.

N **20.6.4.4** Protection of plastic and rubber commodities with CMDA criteria having clearance exceeding the allowable limits of Table 20.6.4.3 shall be in accordance with Table 20.6.4.4.

N ***TABLE 20.6.4.4*** *Plastics and Rubber Commodities*

Storage Configuration	*Where the clearance to ceiling exceeds*	*Protection is based upon the storage height that would result in a clearance to ceiling of…*	*In-rack Sprinklers**
Palletized, solid-piled, bin box, shelf, or back-to-back shelf storage	20 ft (6.1 m)	20 ft (6.1 m)	N/A
Rack storage up to and including 25 ft (7.6 m) in height	10 ft (3.1 m)	10 ft (3.1 m)	Permitted as alternative to presumed clearance of 10 ft (3.1 m)
Rack storage over 25 ft (7.6 m) in height	10 ft (3.1 m)	N/A	Required

*If in-rack sprinklers are required for the actual storage height with an acceptable clearance to ceiling, in-rack sprinklers are installed as indicated by that criteria. Provide one level of supplemental, quick response in-rack sprinklers located directly below the top tier of storage and at every flue space intersection.

For rack storage of Class I through IV materials stored 25 ft (7.6 m) in height or less (protected with spray sprinklers in accordance with Section 21.4), the same basic concepts as described in the commentary to 20.6.4.3 apply. Rather than require the user to increase the protection to what would be needed for higher storage, the user is given the choice of increasing the sprinkler protection to what would be required for higher storage or adding additional in-rack sprinklers. The in-rack sprinklers would need to be in the longitudinal flue (if there is one) at all the transverse flue intersections approximately every 4 ft to 5 ft (1.2 m to 1.5 m). If there is no longitudinal flue, the best place to put the sprinklers is in the middle of the rack at the intersection with transverse flues, but the authority having jurisdiction should be consulted to make sure some unusual condition does not exist that would warrant in-rack sprinkler placement in another location. For racks close to walls, the space between the rack and the wall acts as a longitudinal flue and should be treated as such.

The option of installing additional in-rack sprinklers rather than increasing the protection to what would be required for higher storage is important because the protection for higher storage relies on both ceiling sprinklers and in-rack sprinklers. If a building owner is putting 15 ft (4.6 m) high racks in a building with a 60 ft (18.3 m) high ceiling, designing the sprinkler system for 40 ft (12.2 m) high storage might

EDUFIRE.IR

entail actually building the rack structure up to 40 ft (12.2 m) so that additional in-rack sprinklers can be installed. An owner who wants only 15 ft (4.6 m) high racks should not be required to build taller racks just for the sprinkler system. Thus, the option of adding in-rack sprinklers to the 15 ft (4.6 m) high racks meets the goal of increasing the fire protection of the racks while helping building owners use their buildings as they would like.

20.6.4.5 If in-rack sprinklers are required for the actual storage height with an acceptable clearance to ceiling, in-rack sprinklers shall be installed as indicated by that criteria.

20.6.5 Roof Vents and Draft Curtains. See Section C.6.

C.6 [20.6.5] Tests were conducted as a part of this program with eave line windows or louvers open to simulate smoke and heat venting. These tests opened 87.5 percent and 91 percent more sprinklers than did comparative tests without windows or louvers open. Venting tests that have been conducted in other programs were without the benefit of sprinkler protection and, as such, are not considered in this report, which covers only buildings protected by sprinklers. The design curves are based upon the absence of roof vents or draft curtains in the building. During mop-up operations, ventilating systems, where installed, should be capable of manual exhaust operations.

Testing sponsored by the FPRF has shown that draft curtains can alter the operating pattern of sprinklers. For further details, see the FPRF technical reports *International Fire Sprinkler/Smoke & Heat Vent/Draft Curtain Fire Test Project: Heptane Burner Tests and Commodity Tests*; *International Fire Sprinkler/Smoke & Heat Vent/Draft Curtain Fire Test Project: Large Scale Experiments and Model Development*; and *International Fire Sprinkler/Smoke & Heat Vent/Draft Curtain Fire Test Project: Scoping Tests*. In some cases, vents and draft curtains can have a detrimental effect on the level of protection. If draft curtains other than those detailed in 20.6.6.6 and 20.6.6.6.1 are used, experienced judgment and consideration of the effect on sprinkler performance should be used in determining the final design criteria.

N **20.6.6 Clearance from Deflector to Storage.**

N **20.6.6.1** Unless the requirements of 20.6.6.2 through 20.6.6.5 are met, the clearance between the deflector and the top of storage or contents of the room shall be 18 in. (450 mm) or greater.

20.6.6.2* Manually operated roof vents or automatic roof vents with operating elements that have a higher temperature classification than the automatic sprinklers shall be permitted.

A.20.6.6.2 Sprinkler protection criteria are based on the assumption that roof vents and draft curtains are not being used. *(See Section C.6.)*

20.6.6.3 Early suppression fast-response (ESFR) sprinklers shall not be used in buildings with automatic heat or smoke vents unless the vents use a high-temperature rated, standard-response operating mechanism.

N **20.6.6.4** Where other standards specify greater clearance to storage minimums, they shall be followed.

N **20.6.6.5** A minimum clearance to storage of 36 in. (900 mm) shall be permitted for special sprinklers.

20.6.6.6* Draft curtains shall not be used within ESFR sprinkler systems.

In some cases, draft curtains divert hot gases from a fire along the curtain, causing sprinklers remote from the fire to operate prior to sprinklers closer to the fire. The operating pattern of ESFR sprinklers is critical to their success, and the development of the spray pattern can be easily altered by obstructions. Draft curtains can have a detrimental effect on this operational pattern, and therefore their use is prohibited.

FAQ [20.6.6.6]

Why are draft curtains not allowed within ESFR systems?

As noted in the commentary for 20.6.5, draft curtains have been shown to alter the operating pattern of sprinklers.

EDUFIRE.IR

CLOSER LOOK [20.6.6.6]

Impact of Draft Curtains and Automatically Opening Vents

The concern with draft curtains is that a fire will start under a curtain or, worse, at an intersection of curtains. In such instances, fire tests have shown that the hot gases from a fire are pushed along the curtain and then open sprinklers remote from the fire. Those remote sprinklers take water from the sprinklers that are directly over the fire, limiting their effectiveness and possibly preventing control or suppression. If draft curtains are installed in buildings with fire sprinklers, they should be located over aisles to lessen the chance of a large fire starting directly under the draft curtain. Building owners must be aware that draft curtain placement is dependent on the aisle location so that the aisle location is not changed at a later date without consideration for sprinkler system performance.

Smoke and heat vents at the roof also have the potential to detrimentally affect the sprinkler system's performance. Fire tests performed by the FPRF showed that, in some circumstances, the presence of smoke and heat vents could alter the operating pattern of sprinklers and cause too many sprinklers to open, robbing the sprinklers of water needed to control or suppress the fire. Hundreds of full-scale fire tests conducted over more than 40 years have shown that the criteria in Chapter 21 through Chapter 25 in NFPA 13 are sufficient for controlling or suppressing fires with sprinklers and without smoke or heat vents. For many years, NFPA 13 and its predecessor documents (NFPA 231, *Standard for General Storage*, and NFPA 231C, *Standard for Rack Storage of Materials*) discouraged the installation of smoke and heat vents in sprinklered buildings.

However, the building codes and fire codes used across the United States require smoke and heat vents to be installed in some occupancies. To help building owners comply with the building code or fire code, the 2010 edition of NFPA 13 was revised by adding 20.6.6.2 and 20.6.6.3 to recognize that manually operated smoke or heat vents would be preferable to automatic ones. If automatic vents are required, they must be designed so that their operating elements are rated at a higher operating temperature than those of the sprinklers being used. If the sprinklers have the lower temperature operating element, they would theoretically control the fire without allowing the automatic vents to open. The vents would open only if the sprinklers failed to do their job, in which case the concern for the vents adversely affecting the sprinkler performance would no longer be an issue. Unfortunately, this theoretical solution to the problem assumes that automatic link temperature is the only variable that affects the opening time of the vent compared with the opening time of the sprinkler. In reality, the vent opening time is affected by the location of the vent in relation to the fire and the response time index (RTI) of the vent link. To accurately ensure that the vents do not open and negatively affect sprinkler performance, the link temperature, the RTI, and the location of the vent need to be evaluated.

For ESFR sprinklers, the sensitivity of the sprinkler is even more critical. In this case, the use of standard response operating mechanisms is required by 20.6.6.3 to keep the vent from opening before the sprinkler operates.

A.20.6.6.6 Draft curtains have been shown to have a negative effect on sprinkler effectiveness. If they are mandated, extreme care needs to be taken to minimize any potential impacts.

20.6.6.6.1 Draft curtains separating ESFR sprinklers at system breaks or from control mode sprinklers or between hazards shall be permitted. *(See 14.2.5.)*

Draft curtains are permitted to separate ESFR systems from other hazards or systems using control mode sprinklers to prevent inadvertent operation of ESFR sprinklers from a fire under the control mode sprinklers or system. Control mode sprinklers can be less sensitive in operation and do not have the same suppression characteristics as ESFR sprinklers. This difference can lead to thermal activation of the ESFR sprinklers adjacent to a fire area under control mode sprinklers or systems, reducing the overall water supply.

Draft curtains located at the system breaks between ESFR systems are allowed, since they are expected to have little effect on system performance. Any skewing of the operating area will have the support of separate system risers.

The requirements in 20.6.6.6.1 do not contradict those in 20.6.6.6. Paragraph 20.6.6.6 prohibits the installation of draft curtains within ESFR sprinkler systems. Paragraph 20.6.6.6.1 recognizes that there are cases where a separation between ESFR sprinklers and other types of sprinklers is desirable, as does 20.6.6.6.2, which requires areas protected by ESFR sprinklers to be separated with a draft curtain from areas protected by standard-response sprinklers. In this case, the draft curtain is not within the ESFR system. It is at the boundary of the ESFR system, preventing the hot gases from a fire under the standard-response sprinklers from opening an ESFR sprinkler prior to the standard-response sprinklers over the fire.

EDUFIRE.IR

N **20.6.6.6.2** Where ESFR sprinkler systems are installed adjacent to sprinkler systems with standard-response sprinklers, a draft curtain of noncombustible construction and at least 2 ft (600 mm) in depth shall be required to separate the two areas.

N **20.6.6.6.3** A clear aisle of at least 4 ft (1.2 m) centered below the draft curtain shall be maintained for separation.

N **20.6.6.7** A minimum clearance to storage of less than 18 in. (450 mm) between the top of storage and ceiling sprinkler deflectors shall be permitted where proven by successful large-scale fire tests for the particular hazard.

N **20.6.6.8** The clearance from the top of storage to sprinkler deflectors shall be not less than 36 in. (900 mm) where rubber tires are stored.

20.6.7* High Volume Low Speed (HVLS) Fans.

A.20.6.7 A series of 10 full-scale fire tests and limited-scale testing were conducted to determine the impact of HVLS fan operation on the performance of sprinkler systems. The project, sponsored by the Property Insurance Research Group (PIRG) and other industry groups, was coordinated by the Fire Protection Research Foundation (FPRF). The complete test report, *High Volume/Low Speed Fan and Sprinkler Operation — Ph. 2 Final Report (2011)*, is available from the FPRF. Both control mode density area and early suppression fast response sprinklers were tested. Successful results were obtained when the HVLS fan was shut down upon the activation of the first sprinkler followed by a 90-second delay. Other methods of fan shutdown were also tested including shutdown by activation of air sampling–type detection and ionization-type smoke detectors. Earlier fan shutdown resulted in less commodity damage.

The use of high volume low speed (HVLS) fans started to become prevalent in manufacturing and warehouse occupancies around 2005. With their introduction, there was concern that such fans might have a detrimental effect on the operating pattern of fire sprinklers during a fire. Testing conducted by the FPRF concluded that, as long as the five requirements in 20.6.7.1 are followed, HVLS fans should not adversely affect sprinkler performance. Of particular note in the FPRF report *High Volume/Low Speed Fan and Sprinkler Operation — Phase II* is the final recommendation to have the fan shut down within 90 seconds of the flow from the first sprinkler. During a few of the tests, the shutdown of the fan was seen as the critical variable to the success of the sprinkler system. Cutting the power to the fan and letting it slow down on its own was all that was necessary. It was not considered necessary to completely stop the fan with a brake upon sprinkler activation.

20.6.7.1 The installation of HVLS fans in buildings equipped with sprinklers, including ESFR sprinklers, shall comply with the following:

(1) The maximum fan diameter shall be 24 ft (7.3 m).
(2) The HVLS fan shall be centered approximately between four adjacent sprinklers.
(3) The vertical clearance from the HVLS fan to sprinkler deflector shall be a minimum of 36 in. (900 mm).
(4) All HVLS fans shall be interlocked to shut down immediately upon a waterflow alarm.
(5) Where the building is protected with a fire alarm system, this interlock shall be in accordance with the requirements of *NFPA 72*.

20.7 Unsprinklered Combustible Concealed Spaces.

20.7.1* When using the density/area method or room design method, unless the requirements of 20.7.2 are met for buildings having unsprinklered combustible concealed spaces as described in 9.2.1 and 9.3.18, the minimum area of sprinkler operation for that portion of the building shall be 3000 ft^2 (280 m^2).

EDUFIRE.IR

The requirements in 20.7.1 refer the user to 9.2.1, which provides 19 situations where sprinklers are permitted to be omitted from concealed spaces containing combustible construction members. Sprinklers are permitted to be omitted from those spaces for three reasons:

1. Sprinklers are difficult or impractical to install due to the small size of the space and the inability to fit sprinklers and pipe into the space.
2. Sprinklers are not necessary because noncombustible, limited combustible, or flame retardant materials are used for the structural members.
3. Sprinklers are considered less cost effective because fires rarely start in such spaces.

Even though Chapter 9 allows sprinklers to be omitted from the spaces described in 9.2.1, the user should be aware that there can be a consequence to that decision. A fire might start in a sprinklered space and be controlled but not suppressed by the sprinklers in that space. The fire, while continuing to burn prior to extinguishment, could find its way into one of these unsprinklered concealed spaces and then burn through that space, popping out on the other side into another sprinklered area remote from where the fire first started. That path would cause sprinklers in the new area to also open. Therefore, the sprinkler system design needs to take into account those additional open sprinklers. However, over a hundred years of experience with fires in buildings with combustible types of construction have shown that the 3000 ft^2 (280 m^2) design area is typically sufficient to deal with the types of fires that travel through unsprinklered concealed spaces.

The existence of unsprinklered, combustible concealed spaces in newly constructed warehouses is fairly rare, considering that most new construction of these occupancies is concrete and steel. However, in the conversion of combustible construction to a warehouse or in the retrofit of an existing, old warehouse with sprinklers, it is possible that the user of the more recent editions of NFPA 13 will encounter this situation. Therefore, this rule has been repeated in Chapter 20 as it was in Chapter 19.

A.20.7.1 In order for the minimum 3000 ft^2 (280 m^2) requirement for the size of the remote area to not be extended to the adjacent area, the qualifying concealed space must be separated by the entire fire-rated assembly. Such assemblies often have combustible structural members separating the exterior membranes that can create a concealed combustible space that can qualify for omitting sprinkler protection. If the fire-rated assembly is the qualifying concealed space, an interior fire would greatly reduce the assigned fire-rated duration.

20.7.1.1 The design area of 3000 ft^2 (280 m^2) shall be applied only to the sprinkler system or portions of the sprinkler system that are adjacent to the qualifying combustible concealed space.

20.7.1.2 The term *adjacent* shall apply to any sprinkler system protecting a space above, below, or next to the qualifying concealed space except where a barrier with a fire resistance rating at least equivalent to the water supply duration completely separates the concealed space from the sprinklered area.

20.7.2 The following unsprinklered combustible concealed spaces shall not require a minimum design area of sprinkler operation of 3000 ft^2 (280 m^2):

(1) Noncombustible and limited-combustible concealed spaces with minimal combustible loading having no access. The space shall be considered a concealed space even with small openings such as those used as return air for a plenum.
(2) Noncombustible and limited-combustible concealed spaces with limited access and not permitting occupancy or storage of combustibles. The space shall be considered a concealed space even with small openings such as those used as return air for a plenum.
(3) Combustible concealed spaces filled entirely with noncombustible insulation.
(4) Concealed spaces where rigid materials are used and the exposed surfaces have a flame spread index of 25 or less and the materials have been demonstrated to not propagate fire more than 10.5 ft (3.2 m) when tested in accordance with ASTM E84, *Standard Test Method for Surface Burning Characteristics of Building Materials,* or UL 723, *Standard*

EDUFIRE.IR

for Test for Surface Burning Characteristics of Building Materials, extended for an additional 20 minutes in the form in which they are installed in the space.

(5) Concealed spaces in which the exposed materials are constructed entirely of fire retardant–treated wood as defined by NFPA 703.

(6) Concealed spaces over isolated small compartments not exceeding 55 ft^2 (5.1 m^2) in area.

(7) Vertical pipe chases under 10 ft^2 (0.9 m^2), provided that in multifloor buildings the chases are firestopped at each floor using materials equivalent to the floor construction. Such pipe chases shall contain no sources of ignition, piping shall be noncombustible, and pipe penetrations at each floor shall be properly sealed.

(8) Exterior columns under 10 ft^2 (0.9 m^2) in area formed by studs or wood joists, supporting exterior canopies that are fully protected with a sprinkler system.

(9) Cavities within unsprinklered wall spaces.

Subsection 20.7.2 lists nine types of concealed spaces that are not required to address the increase in the design area because the lack of combustibility in the construction of the concealed space limits the probability that a fire will move through the concealed space. In those cases, the existence of combustible materials, such as telephone/computer wire, drain pipes, or other materials, is typically not a sufficient concern to require additional sprinkler protection.

CLOSER LOOK [20.7]

Unsprinklered Combustible Concealed Spaces

In an ordinary hazard occupancy with a 60-minute water supply duration requirement and having an unsprinklered combustible concealed space between the first and second floors, the application of the 3000 ft^2 (280 m^2) design area is required. In this case, the design area for the sprinkler system on both the first and second floors would be required to be 3000 ft^2 (280 m^2) as provided by 20.7.1.1, unless the floor slab completely separates the concealed space and the second floor has a 1-hour fire resistance rating as provided by 20.7.1.2. If the building were four stories in height, the existence of the unsprinklered combustible concealed space between the first and second floors would not affect the design area required on the third and fourth floors of the building.

If the drop ceiling below the floor slab that creates the concealed space is necessary for the 1-hour rating of the floor/ceiling assembly, the design area would apply to the system on the second floor, because the entire fire-resistive assembly (from the bottom of the suspended ceiling to the top of the floor slab) would not be between the concealed space and the area protected by the second floor sprinkler system.

The 3000 ft^2 (280 m^2) design area is intended to be applied after all the other adjustments required by the density/area method of calculation, which means that users should pick their points wisely from the density/area curves. By sliding up the curves to pick the initial point, users can conserve water and make the system design more efficient.

The 3000 ft^2 (280 m^2) design area applies only to sprinklers using the density/area method, so it does not apply to CMSA and ESFR sprinkler systems. Because CMSA and ESFR sprinklers are specifically designed to deal with fires in storage and warehouse occupancies, it is highly unlikely that a fire would be controlled or suppressed by such sprinklers and still have sufficient force to move through a combustible concealed space. Even if a fire did move through such a concealed space, it is assumed that there are sufficient safety factors in the design area to deal with additional sprinklers that might open.

If 9.2.1 does not specifically allow sprinklers to be omitted from a concealed space, then Section 20.7 cannot be used to justify omitting sprinklers from those concealed spaces. The design area cannot be increased to 3000 ft^2 (280 m^2) while sprinklers are omitted from a concealed space that is not addressed by 9.2.1.

20.8 Room Design Method.

20.8.1* The water supply requirements for sprinklers only shall be based upon the room that creates the greatest demand.

A.20.8.1 This subsection allows for calculation of the sprinklers in the largest room, so long as the calculation produces the greatest hydraulic demand among selection of rooms and

EDUFIRE.IR

communicating spaces. For example, in a case where the largest room has four sprinklers and a smaller room has two sprinklers but communicates through unprotected openings with three other rooms, each having two sprinklers, the smaller room and group of communicating spaces should also be calculated.

Corridors are rooms and should be considered as such.

Walls can terminate at a substantial suspended ceiling and need not be extended to a rated floor slab above for this section to be applied.

The room with the greatest demand might not be the room farthest from the water supply and might not be the largest room. The room with the greatest demand depends on three variables:

1. The type of sprinklers being used in the room
2. The commodity being protected in the room and its arrangement
3. The size of the room

All three variables need to be analyzed carefully when the room design method is being applied to a storage occupancy. In some cases, it might be necessary to perform multiple sets of hydraulic calculations to prove that the most demanding room has been identified. It is possible to have situations in which one room has a more demanding pressure and another room has a more demanding flow. In such cases, the user needs to ensure that the water supply can provide both demands individually (not added together).

20.8.2 To utilize the room design method, all rooms shall be enclosed with walls having a fire resistance rating equal to the required water supply duration.

20.8.2.1 Minimum protection of openings shall include automatic- or self-closing doors with the appropriate fire protection rating for the enclosure.

For storage and warehouse occupancies, the walls need to have fire resistance ratings between 60 minutes and 150 minutes. The hourly ratings for doors are always allowed to be slightly lower than the ratings for the walls. For example, an appropriate door for a wall with a 60-minute rating is a 45-minute door. In other words, the rating for the door does not have to be the same as the wall — it just requires the appropriate rating based on the rating of the wall. The requirements for rated assemblies and rated opening protectives can be found in model building codes.

The option of having unprotected openings with two sprinklers added in the adjacent space does not exist for storage portions of warehouse occupancies. This option is allowed by Chapter 19 only for light hazard occupancies. Using this part of the room design method would be appropriate only for calculating the light hazard space, such as an office package, within a warehouse if the room design method were being selected for that light hazard portion of the building.

20.8.3 Where the room design method is used, the density shall correspond to that required for the smallest area acceptable under the density/area method.

20.9* High-Expansion Foam Systems.

A.20.9 Detection systems, concentrate pumps, generators, and other system components that are essential to the operation of the system should have an approved standby power source.

Where high-expansion foam is contemplated as the protection media, consideration should be given to possible damage to the commodity from soaking and corrosion. Consideration also should be given to the problems associated with the removal of the foam after discharge.

20.9.1 General: High Expansion Foam Systems.

20.9.1.1 High-expansion foam systems that are installed in addition to automatic sprinklers shall be installed in accordance with NFPA 11.

EDUFIRE.IR

The use of high-expansion foam to fill a compartment is rare in storage occupancies due to the cleanup efforts necessary to remove foam after discharge. But the use of high-expansion foam is an efficient way to protect some buildings that have low total water usage, specifically in areas where water conservation is a concern. Where such systems are installed, they might decrease the ceiling sprinkler density and lessen the need for in-rack sprinklers. The system needs to operate automatically, and the detectors must be spaced closer together than their normal listing would allow, to ensure that the system reacts quickly to a fire (see 20.9.1.2 and 20.9.1.4).

20.9.1.2 High-expansion foam systems shall be automatic in operation.

20.9.1.3 High-expansion foam used to protect the idle pallet shall have a maximum fill time of 4 minutes.

20.9.1.4 Detectors for high-expansion foam systems shall be listed and shall be installed at no more than one-half the listed spacing.

20.9.1.5 The release system for the high expansion foam deluge system shall be designed to operate prior to the sprinklers installed in the area.

20.9.1.5.1 The maximum submergence time for the high-expansion foam shall be 5 minutes for Class I, Class II, or Class III commodities and 4 minutes for Class IV commodities.

20.9.2 High-Expansion Foam: Reduction in Ceiling Density.

20.9.2.1 Using CMDA sprinkler protection criteria for palletized, solid-piled, bin box, shelf, or back-to-back shelf storage of Class I through Class IV commodities, idle pallets, or plastics, where high-expansion foam systems are used in combination with ceiling sprinklers, a reduction in ceiling density to one-half that required for Class I through Class IV commodities, idle pallets, or plastics shall be permitted without revising the design area, but the density shall be no less than 0.15 gpm/ft^2 (6.1 mm/min).

The use of high-expansion foam is not a common practice. The mandate for a minimum threshold ceiling density of 0.15 gpm/ft^2 (6.1 mm/min) with high-expansion foam would apply only to the few base protection scenarios that have a ceiling density of less than 0.30 gpm/ft^2 (12.2 mm/min).

It should be noted that no specific guidance or allowance is provided for the use of high-expansion foam with either CMSA or ESFR sprinklers.

20.9.2.2 Using CMDA sprinkler protection criteria for rack storage, where high-expansion foam systems are used in combination with ceiling sprinklers, the minimum ceiling sprinkler design density shall be 0.2 gpm/ft^2 (8.2 mm/min) for Class I, Class II, or Class III commodities or 0.25 gpm/ft^2 (10.2 mm/min) for Class IV commodities for the most hydraulically remote 2000 ft^2 (185 m^2) operating area.

20.9.2.3 Where high-expansion foam systems are used in combination with ceiling sprinklers, the maximum submergence time shall be 7 minutes for Class I, Class II, or Class III commodities and 5 minutes for Class IV commodities.

20.9.2.4 Where high-expansion foam systems are used for rack storage of Class I through IV commodities over 25 ft (7.6 m) high up to and including 35 ft (11 m) high, they shall be used in combination with ceiling sprinklers.

20.9.2.5 **Reduced-Discharge Density.** Where high-expansion foam systems for rubber tire protection are installed in accordance with NFPA 11, a reduction in sprinkler discharge density to one-half the density specified in Table 21.6.1(a) or 0.24 gpm/ft^2 (9.8 mm/min), whichever is higher, shall be permitted.

EDUFIRE.IR

20.9.2.6 In-rack sprinklers for the protection of Class I through IV commodities shall not be required where high-expansion foam systems are used in combination with ceiling sprinklers.

20.9.2.7 Detectors for High-Expansion Foam Systems.

20.9.2.7.1 Detectors shall be listed and shall be installed in one of the following configurations:

(1) At the ceiling only where installed at one-half the listed linear spacing [e.g., 15 ft × 15 ft (4.6 m × 4.6 m) rather than at 30 ft × 30 ft (9.1 m × 9.1 m)]; at the ceiling at the listed spacing and in racks at alternate levels
(2) Where listed for rack storage installation and installed in accordance with the listing to provide response within 1 minute after ignition using an ignition source that is equivalent to that used in a rack storage testing program

20.9.2.7.2 Ceiling detectors alone shall not be used where the clearance to ceiling exceeds 10 ft (3.0 m) or the height of the storage exceeds 25 ft (7.6 m).

20.9.2.7.3 Detectors for preaction systems shall be installed in accordance with 20.9.2.7.

20.10* Adjacent Hazards or Design Methods.

A.20.10 The situation frequently arises where a small area of a higher hazard is surrounded by a lesser hazard. For example, consider a 600 ft^2 (56 m^2) area consisting of 10 ft (3 m) high on-floor storage of cartoned nonexpanded plastic commodities surrounded by a plastic extruding operation in a 15 ft (4.6 m) high building. In accordance with Chapter 12, the density required for the plastic storage must meet the requirements for extra hazard (Group 1) occupancies. The plastic extruding operation should be considered an ordinary hazard (Group 2) occupancy. In accordance with Chapter 11, the corresponding discharge densities should be 0.3 gpm/ft^2 (12.2 mm/min) over 2500 ft^2 (230 m^2) for the storage and 0.2 gpm/ft^2 (8.1 mm/min) over 1500 ft^2 (140 m^2) for the remainder of the area. *(Also see Chapter 11 for the required minimum areas of operation.)*

If the storage area is not separated from the surrounding area by a wall or partition *(see 19.2.2)*, the size of the operating area is determined by the higher hazard storage.

For example, the operating area is 2500 ft^2 (230 m^2). The system must be able to provide the 0.3 gpm/ft^2 (12.2 mm/min) density over the storage area and 15 ft (4.6 m) beyond. If part of the remote area is outside the 600 ft^2 (56 m^2) plus the 15 ft (4.6 m) overlap, only 0.2 gpm/ft^2 (8.1 mm/min) is needed for that portion.

If the storage is separated from the surrounding area by a floor-to-ceiling/roof partition that is capable of delaying heat from a fire on one side from fusing sprinklers on the other side, the size of the operating area is determined by the occupancy of the surrounding area. In this example, the design area is 1500 ft^2 (140 m^2). A 0.3 gpm/ft^2 (12.2 mm/min) density is needed within the separated area with 0.2 gpm/ft^2 (8.1 mm/min) in the remainder of the remote area.

Where high temperature–rated sprinklers are installed at the ceiling, high temperature–rated sprinklers also should extend beyond storage in accordance with Table A.20.10.

When the small higher hazard area is larger than the required minimum area dictated by the surrounding occupancy, even when separated by draft curtains, barriers, or partitions capable of delaying heat, the size of the operating area is determined by the higher hazard storage.

EDUFIRE.IR

TABLE A.20.10 *Extension of Installation of High-Temperature Sprinklers over Storage*

Design Area for High Temperature–Rated Sprinklers		*Distance Beyond Perimeter of High Hazard Occupancy for High Temperature–Rated Sprinklers*	
ft²	*m²*	*ft*	*m*
2000	185	30	9.1
3000	280	40	12
4000	370	45	14
5000	465	50	15
6000	555	55	17

20.10.1 For buildings with two or more adjacent hazards or design methods, the following shall apply:

(1) Where areas are not physically separated by a barrier or partition capable of delaying heat from a fire in one area from fusing sprinklers in the adjacent area, the required sprinkler protection for the more demanding design basis shall extend 15 ft (4.6 m) beyond its perimeter.

(2) The requirements of 20.10.1(1) shall not apply where the areas are separated by a draft curtain or barrier located above an aisle, horizontally a minimum of 24 in. (600 mm) from the adjacent hazard on each side, or a partition that is capable of delaying heat from a fire in one area from fusing sprinklers in the adjacent area.

(3) The requirements of 20.10.1(1) shall not apply to the extension of more demanding criteria from an upper ceiling level to beneath a lower ceiling level where the difference in height between the ceiling levels is at least 24 in. (600 mm), located above an aisle, horizontally a minimum 24 in. (600 mm) from the adjacent hazard on each side.

NFPA 13 does not require a physical separation between different hazard classifications or types of storage that require different levels of protection. Users of NFPA 13 have five choices when faced with different levels of protection required from ceiling sprinklers:

1. Protect the entire space using the highest protection criteria for all hazards.
2. Extend the higher hazard protection criteria 15 ft (4.6 m) beyond the perimeter of the higher hazard storage (see Exhibit 20.19).
3. Install a minimum 2 ft (600 mm) deep draft curtain/barrier positioned over an aisle at least 2 ft (600 mm) horizontally from the edge of storage and extend the higher hazard protection to the face of the draft curtain/barrier. There is no specific fire resistance rating or construction criteria prescribed for the draft curtain/barrier, but it must be capable of stopping the heat from the higher hazard area from opening sprinklers in the lower hazard area (see Exhibit 20.20).
4. Install a partition extending from the floor to the roof deck between the hazards and extend the higher hazard protection to the face of the partition. There is no specific fire resistance rating or construction criteria prescribed for the partition, but it needs to be capable of stopping the heat from the higher hazard area from opening sprinklers in the lower hazard area.
5. Use a ceiling height drop differential of at least 2 ft (600 mm) positioned over an aisle at least 2 ft (600 mm) horizontally from the edge of storage and extend the higher hazard protection to the face of the ceiling height drop.

In circumstances where the higher hazard requires the use of high-temperature sprinklers and the lower hazard area uses ordinary-temperature sprinklers, an additional recommendation is provided in A.20.10 suggesting that the higher-temperature sprinklers be carried even farther than 15 ft (4.6 m), as shown by Table A.20.10. While the higher hazard discharge criteria need not be carried farther than 15 ft (4.6 m), the higher temperature sprinklers should be. Note that the recommendation to carry the higher temperature sprinklers farther than 15 ft (4.6 m) is not mandatory but rather a potential approach recommended in the Annex A material regarding Section 20.10.

EDUFIRE.IR

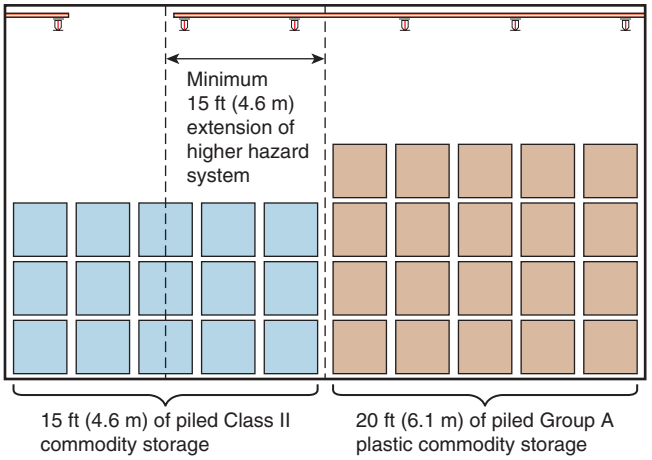

EXHIBIT 20.19 Minimum 15 ft (4.6 m) Extension of Higher Hazard System.

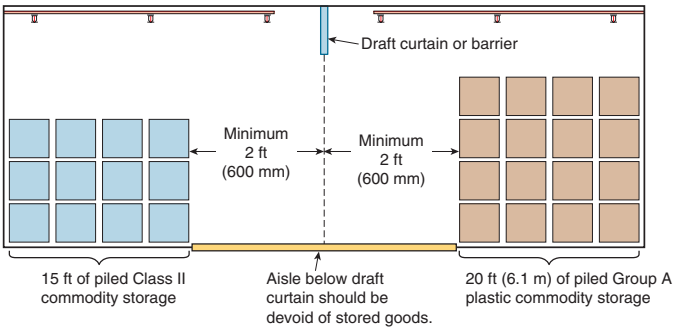

EXHIBIT 20.20 Draft Curtain with Aisle.

DESIGNER'S CORNER [20.10]

How should two different storage commodities be protected in the same warehouse where the protection criteria between the two are drastically different?

Where two different storage commodities are located in the same warehouse, there are three different methods to deal with the situation. The first method is to analyze all the requirements for each storage situation and protect the building with the most demanding of each of the requirements. This is the most flexible option because it gives the building owner the ability to move the higher hazard commodity anywhere in the warehouse.

The second option is to segregate the storage commodities in separate parts of the warehouse and protect the space above each commodity with sprinkler protection appropriate for that commodity. With this option, a barrier capable of stopping the heat and smoke from a fire must separate the two different areas of the warehouse. The barrier does not need to go from the floor to the ceiling; rather, it needs only to prevent the heat from a fire in the more demanding side from opening sprinklers on the less demanding side. Typically, a 2 ft (600 mm) deep draft curtain, such as the one shown in Exhibit 20.20, will be sufficient for this activity. In the 2016 edition of NFPA 13, a requirement was added for the space beneath the draft curtain to be an aisle at least 4 ft (1.2 m) wide.

An alternative to the 2 ft (600 mm) deep draft curtain is a 2 ft (600 mm) change in ceiling elevation as long as the more demanding commodity is on the side with the higher ceiling. As with the draft curtain option, the change in ceiling elevation must be over an aisle that is at least 2 ft (600 mm) wide.

The third option is to segregate the storage commodities in separate parts of the warehouse but not install any kind of barrier between the sprinklers at the ceiling. In this case, there is a chance that the heat from a fire in the higher hazard commodity might open sprinklers on the lower hazard side. Therefore, NFPA 13 requires the sprinklers on the lower hazard side to be designed to the criteria for the higher hazard (to be able to handle the higher heat release) for a linear distance of 15 ft (4.6 m) past the point of commodity separation. Since the maximum allowable distance between sprinklers is 12 ft (3.7 m), this will be at least two rows of sprinklers but might be as much as three rows depending on the spacing selected.

20.10.2* Protection criteria for Group A plastics shall be permitted for the protection of the same storage height and configuration of Class I, II, III, and IV commodities.

A.20.10.2 Information for the protection of Classes I, II, III, and IV commodities was extrapolated from full-scale fire tests that were performed at different times than the tests that were used to develop the protection for plastic commodities. It is possible that, by selecting certain points from the tables (and after applying the appropriate modifications), the protection specified

EDUFIRE.IR

by 21.4.1.4 exceeds the requirements of Section 21.5. In such situations, the protection specified for plastics, although less than that required by the tables, can adequately protect Class I, II, III, and IV commodities.

This section also allows storage areas that are designed to protect plastics to store Class I, II, III, and IV commodities without a re-evaluation of fire protection systems.

20.10.3 CMSA and ESFR sprinklers shall be permitted to protect storage of Class I through Class IV commodities, Group A plastic commodities, miscellaneous storage, and other storage as specified in Chapters 20 through 25 or by other NFPA standards.

20.10.4 Systems with Multiple Hazard Classifications. For systems with multiple hazard classifications, the hose stream allowance and water supply duration shall be in accordance with 20.12.2 as well as one of the following:

(1) The water supply requirements for the highest hazard classification within the system shall be used.
(2) The water supply requirements for each individual hazard classification shall be used in the calculations for the design area for that hazard.
(3)* For systems with multiple hazard classifications where the higher classification only lies within single rooms less than or equal to 400 ft^2 (37 m^2) in area with no such rooms adjacent, the water supply requirements for the principal occupancy shall be used for the remainder of the system.

A.20.10.4(3) When a light hazard occupancy, such as a school, contains separate ordinary hazard rooms no more than 400 ft^2 (37 m^2), the hose stream allowance and water supply duration would be that required for a light hazard occupancy.

NFPA 13 provides the user with three options for hose stream demands for situations where buildings have more than one hazard classification or commodity. As always, the entire sprinkler system can be designed for the most demanding hazard. If the designer does not want to design the building for the most demanding hazard, there is an option to ensure that the water supply, including hose stream demands, can satisfy each portion of the sprinkler system separately. For situations where the higher hazard is relatively small, the hose stream for the lower hazard will suffice.

20.11* Hose Connections.

A.20.11 Authorities having jurisdiction have varying requirements for plant first-aid and fire-fighting operations. Examples include no hose stations, hose stations with hose line and nozzles, and hose stations with no hose line or nozzles.

20.11.1 Small [1½ in. (40 mm)] Hose Connections See Section C.5.

C.5 [16.15.1 and 20.11.1] In most tests conducted, it was necessary to use small hose for mop-up operations. Small hose was not used in the high-expansion foam test.

Test 97 was conducted to evaluate the effect of dry pipe sprinkler operation. Test results were approximately the same as the base test with a wet pipe system. A study of NFPA records, however, indicates an increase in area of operation of 30 percent to be in order for dry pipe systems as compared with wet pipe systems.

20.11.1.1 Hose Connection. Small hose connections [1½ in. (40 mm)] shall be provided where required by the authority having jurisdiction in accordance with Section 16.15 for first-aid, fire-fighting, and overhaul operations.

EDUFIRE.IR

20.11.1.2 Small hose connections shall not be required for the protection of Class I, II, III, and IV commodities stored 12 ft (3.7 m) or less in height.

Hose stations are not required for all storage occupancies. Many building owners are concerned that if hose stations are located in their warehouse, they will be required to provide fire-fighting equipment and training to their employees. Rather than providing this special training and equipment, most building owners want their employees to evacuate the building if a fire occurs and allow the sprinkler system to deal with the fire. If the building has some specific hazard, or if the fire-fighting plan for the building includes using hose connections inside the building, the authority having jurisdiction has the right under this section to require that hose connections be provided.

NFPA 13 does allow the authority having jurisdiction to waive the requirement for small hose lines. Many jurisdictions waive the requirement for the hose and nozzle but do not waive the requirement for actual hose connections. Such connections might be useful for fire departments as they extinguish the fire that the sprinkler system has knocked down. They might also be useful for fire departments during overhaul activities (not major fire attack operations). If connections are available, the fire department will not need to stretch hose lines all the way from the apparatus parked outside the building. The fire department personnel can bring their high-rise packs (with hose, nozzles, and adapter) with them into the building. Not requiring the hose and nozzle to be present removes the concern that the fire department personnel might try to operate the hose lines when the equipment has not been properly maintained in good order and also removes the concern of the owner/tenant with regard to any OSHA training requirements for employees.

N 20.12 Hose Stream Allowance and Water Supply Duration.

N **20.12.1** Hose stream allowance and water supply duration for Chapters 20 through 25 shall be in accordance with Section 20.12.

20.12.2 Hose Stream Allowance and Water Supply Duration.

20.12.2.1* Tanks shall be sized to supply the equipment that they serve.

A.20.12.2.1 Where tanks serve sprinklers only, they can be sized to provide the duration required for the sprinkler system, ignoring any hose stream demands. Where tanks serve some combination of sprinklers, inside hose stations, outside hose stations, or domestic/process use, the tank needs to be capable of providing the duration for the equipment that is fed from the tank, but the demands of equipment not connected to the tank can be ignored. Where a tank is used for both domestic/process water and fire protection, the entire duration demand of the domestic/process water does not need to be included in the tank if provisions are made to segregate the tank so that adequate fire protection water is always present or if provisions are made to automatically cut off the simultaneous use in the event of fire.

If a tank serves only a sprinkler system and has no inside hose stations and no outside hydrants for manual fire fighting, it needs to be sized to meet only the duration demand of the sprinkler system. If the tank serves only the sprinkler system and some inside hose stations with no outside hydrants, then it needs to be sized to meet only the duration demand of the sprinkler system and the inside hose (see 20.12.2.4). Tanks need to be sized for the sprinkler system plus inside and outside hose demand only where they are physically supplying water to sprinkler systems and outside hydrants.

Tanks are permitted to serve both domestic and fire protection uses. However, the tank must be sized to handle the full fire protection system demand plus the simultaneous domestic demand, unless the tank is segregated so that the water used for fire protection always stays in the tank, while the water used for domestic services runs out before any water is taken from the fire protection portion. This task can be accomplished by making the connection for domestic use higher in the tank than the connection for fire protection. As long as the volume of water between the connections is sufficient for fire

EDUFIRE.IR

protection, the water will not flow into the domestic system while there is still sufficient water for fire protection. Another way to accomplish this task would be to shut down the domestic use of water when a fire occurs.

20.12.2.2* Pumps shall be sized to supply the equipment that they serve.

A.20.12.2.2 Where pumps serve sprinklers only, they can be sized to provide the flow required for the sprinkler system, ignoring any hose stream demands. Where pumps serve some combination of sprinklers, inside hose stations, or outside hose stations, the pump needs to be capable of providing the flow for the equipment that is fed from the pump, but the demands of equipment not connected to the pump can be ignored.

If a pump serves only a sprinkler system with no inside hose stations and no outside hydrants for manual fire fighting, then the pump needs to be sized to meet only the flow demand of the sprinkler system. If the pump serves only the sprinkler system and some inside hose stations with no outside hydrants, then the pump needs to be sized to meet only the flow demand of the sprinkler system and the inside hose (see 20.12.2.4). Pumps need to be sized for the sprinkler system plus inside and outside hose demand only when they are physically supplying water to sprinkler systems and outside hydrants.

However, the water supply itself is another story. Even if the pump is not sized to meet the flow demand for outside hose streams, the water supply behind the pump must be capable of providing the outside hose for fire department use, without affecting the flow and pressure available to the pump. For example, if a fire protection system for a warehouse has a pump feeding a sprinkler system with a demand of 1300 gpm (4921 L/min) and some inside hose stations with a demand of 100 gpm (380 L/min) but no outside hydrants, the fire pump would need to be sized to handle a fire protection flow of 1400 gpm (5300 L/min). However, if the water supply that is feeding the pump has outside hydrants on it, the supply would need to be evaluated to ensure that the pressure available at 1800 gpm (6800 L/m) [1400 gpm (5300 L/min) for the sprinkler system and inside hose plus 400 gpm (1514 L/min) for outside hose demand] was sufficient to allow 1400 gpm (5300 L/min) to leave the supply and go to the pump at a positive gauge pressure sufficient to meet the demands of the system design.

20.12.2.3 Water allowance for outside hose shall be added to the sprinkler requirement at the connection to the city main or a yard hydrant, whichever is closer to the system riser.

20.12.2.4 Where inside hose connections are planned or are required, the following shall apply:

(1) A total water allowance of 50 gpm (190 L/min) for a single hose connection installation shall be added to the sprinkler requirements.
(2) A total water allowance of 100 gpm (380 L/min) for a multiple hose connection installation shall be added to the sprinkler requirements.
(3) The water allowance shall be added in 50 gpm (190 L/min) increments beginning at the most remote hose connection, with each increment added at the pressure required by the sprinkler system design at that point.

The flow for inside hose connections is determined in the following manner:

- For systems with no inside hose demand, 0 gpm (0 L/min) is added.
- For systems with only one inside hose connection, 50 gpm (190 L/min) is added at the location where the inside hose connects to the same piping as the sprinkler system at whatever pressure demand the sprinkler system needs at that location.
- For systems with two or more inside hose connections, 50 gpm (190 L/min) is added at the locations where the two most remote hose connections connect to the same piping as the sprinkler system at whatever pressure is needed by the sprinkler system at those locations. This calculation makes a total inside hose demand of 100 gpm (380 L/min), [i.e., 2 connections × 50 gpm = 100 gpm (2 connections × 190 L/min = 380 L/m)].

EDUFIRE.IR

The outside hose demand is then obtained by subtracting the inside hose demand determined in the preceding text from the total hose demand as expressed in Table 20.12.2.6. For example, if Table 20.12.2.6 requires the total hose demand to be 500 gpm (1900 L/min) for some storage situation and if the fire protection system has 20 inside hose stations with an inside hose demand of 100 gpm (380 L/min), the outside hose demand would be 400 gpm (1500 L/min) [i.e., 500 gpm – 100 gpm = 400 gpm [1900 L/m – 380 L/m = 1500 L/min)]. The only time that the outside hose demand and the total hose demand would be the same is when the fire protection system has no inside hose stations and the inside hose demand is 0 gpm (0 L/min).

20.12.2.5 When hose valves for fire department use are attached to wet pipe sprinkler system risers in accordance with 16.15.2, the following shall apply:

(1) The water supply shall not be required to be added to standpipe demand as determined from NFPA 14.
(2) Where the combined sprinkler system demand and hose stream allowance of Chapters 20 through 25 exceeds the requirements of NFPA 14, this higher demand shall be used.
(3) For partially sprinklered buildings, the sprinkler demand, not including hose stream allowance, as indicated in Chapters 20 through 25 shall be added to the requirements given in NFPA 14.

For fully sprinklered buildings, the design of a combined standpipe/sprinkler system is required to be based on the higher flow required for either the standpipe system as required by NFPA 14, *Standard for the Installation of Standpipe and Hose Systems*, or the sprinkler system design, including hose stream allowance as required by NFPA 13. This design is premised on the idea that in a fully sprinklered building it would not normally be anticipated that both systems would be needed simultaneously. For partially sprinklered buildings, the design must accommodate the sprinkler demand (excluding hose stream allowance) plus the standpipe system demand. The addition of the two demands is required because a fire originating in an unsprinklered portion of the building might necessitate the use of both systems simultaneously.

20.12.2.6 Unless indicated otherwise, the minimum water supply requirements for a hydraulically designed sprinkler system shall be determined by adding the hose stream allowance from Table 20.12.2.6 to the water demand for sprinklers.

C.8 [20.12.2.6] In all valid tests with double-row racks, sprinkler water supplies were shut off at approximately 60 minutes. In only one test did the last sprinkler operate in excess of 30 minutes after ignition; the last sprinkler operated in excess of 25 minutes in three tests, with the majority of tests involving the last sprinkler operating within 20 minutes.

Table 20.12.2.6 establishes that the amount of water set aside for manual fire extinguishment by fire fighters is connected to the expected size of the fire being controlled by the sprinklers. If the fire is expected to be small enough to be controlled or suppressed by a small number of sprinklers, such as 6 to 12, the hose stream and duration demands are relatively small. However, if the fire is expected to get larger and open more sprinklers, such as 15 or 25, then the hose stream and duration demands are larger, recognizing that fire fighters might be facing a larger fire when they arrive on the scene.

The values in Table 20.12.2.6 are totals for inside and outside hose stream demands. The outside hose stream demand is calculated by taking the total demand from the table and subtracting the inside demand as determined from 20.12.2.4.

20.12.2.7 For the protection of baled cotton, the total water supply available shall be sufficient to provide the recommended sprinkler discharge density over the area to be protected, plus a minimum of 500 gpm (1900 L/min) for hose streams.

20.12.2.7.1 Water supplies shall be capable of supplying the total demand for sprinklers and hose streams for not less than 2 hours.

EDUFIRE.IR

TABLE 20.12.2.6 *Hose Stream Allowance and Water Supply Duration*

Commodity	*Sprinkler Type*	*Sprinkler Spacing Type*	*Number of Ceiling Sprinklers in Design Area*[a]	*Size of Design Area at Ceiling*	*Hose Stream Allowance*		*Water Supply Duration (minutes)*
					gpm	*L/min*	
Class I–IV Commodities, Group A plastics, idle wood pallets, idle plastic pallets and miscellaneous storage	Control mode density/area (CMDA)	Standard and extended-coverage	NA	Up to 1200 ft² (112 m²)	250	950	60
				Over 1200 ft² (112 m²) up to 1500 ft² (140 m²)	500	1900	90
				Over 1500 ft² (140 m²) up to 2600 ft² (240 m²)	500	1900	120
				Over 2600 ft² (240 m²)	500	1900	150
	Control mode specific application (CMSA)	Standard	Up to 12	NA	250	950	60
			Over 12 to 15	NA	500	1900	90
			Over 15 to 25	NA	500	1900	120
			Over 25	NA	500	1900	150
		Extended-coverage	Up to 6	NA	250	950	60
			Up to 8[b]	NA	250	950	60
			Over 6 to 8	NA	500	1900	90
			Over 8 to 12	NA	500	1900	120
			Over 12	NA	500	1900	150
	Early suppression fast response (ESFR)	Standard	Up to 12	NA	250	950	60
			Over 12 to 15	NA	500	1900	90
			Over 15 to 25	NA	500	1900	120
			Over 25	NA	500	1900	150
On-floor rubber tire storage up to 5 ft (1.5 m) in height	CMDA & CMSA	Standard and extended-coverage	Any	Any	250	950	120
Rubber tire storage	CMDA	Standard and extended-coverage	NA	Up to 5000 ft² (465 m²)	750	2850	180
	CMSA	Standard	Up to 15	NA	500	1900	180
	ESFR	Standard	Up to 12	NA	250	950	60
			Over 12 to 20	NA	500	1900	120[c]
Roll paper	CMDA	Standard	NA	Up to 4000 ft² (370 m²)	500	1900	120
	CMSA	Standard	Up to 25	NA	500	1900	120
	ESFR	Standard	Up to 12	NA	250	950	120
Alternative protection per 25.8.3.3	NA	NA	NA	NA	500	1900	120

NA: Not applicable.

[a]For CSMA and ESFR sprinklers, the additional sprinklers included in the design area for obstructions do not need to be considered in determining the total number of sprinklers in this column.

[b]Limited to a maximum of 144 ft² (13 m²) per sprinkler.

[c]For storage on-tread, on-side, and laced tires in open portable steel racks or palletized portable racks, with pile height up to 25 ft (7.6 m) and building height up to 30 ft (9.1 m) with K-14.0 (K-200) or K16.8 (K-240) ESFR sprinklers, the water supply duration is 180 minutes.

EDUFIRE.IR

20.12.3 The minimum water supply requirements shall be determined by adding the hose stream allowance from 20.12.2 to the water supply for sprinklers as determined by Chapters 20 through 25.

The inclusion of a hose stream demand is important in the design of every fire sprinkler system. Most sprinkler systems are designed to control the fire, but they rely on the fire department arriving and finishing the job of extinguishing the fire with manual hoses. The extra flow that the fire department takes from the water supply needs to be accounted for in the design of the sprinkler system. If this extra flow was not accounted for, the sprinkler system will not have sufficient water to continue to control the fire while the fire department starts its operations. In the interim period between the initial sprinkler system operation and any fire department operations that utilize hose stream discharge fed from the water supply, the additional hose stream allowance included in the design provides a degree of safety for the overall design. The hose stream demand is simply added to the sprinkler demand at the pressure necessary for the operation of the sprinkler system. However, in situations where the water supply for the sprinklers is not interconnected with the water supply used by the fire department, the hose stream demand is not required to be added to the sprinkler demand (see 20.12.2.1).

20.12.4 The minimum water supply requirements determined from 20.12.3 shall be available for the minimum duration specified in 20.12.2.

The duration demand of the sprinkler system usually is questioned only when the water supply for the sprinkler system is a stored water supply such as a tank. Public water utilities generally are considered reliable enough to provide the demand duration for the fire protection system.

20.12.5 Total system water supply requirements shall be determined in accordance with the hydraulic calculation procedures of Chapter 27.

20.13 Discharge Considerations: General.

20.13.1 Multiple Adjustments.

20.13.1.1 Where multiple adjustments to the area of operation are required to be made, these adjustments shall be compounded based on the area of operation originally selected.

Multiple adjustments to the design area are rare for storage occupancies. This rule is included in Chapter 20 so that it correlates with Chapter 19 for consistency, in case multiple adjustments become necessary at some point. Calculating the multiple adjustments would begin with the selection of an area from the density/area curves, followed by multiplying the adjustments in any order. Due to the laws of multiplication, it would not make any difference in which order the adjustments are made, since multiplication can be made in any order, with the same result.

20.13.1.2 If the building has unsprinklered combustible concealed spaces, the rules of Section 20.7 shall be applied after all other modifications have been made.

20.13.2* Wet Pipe Systems.

A.20.13.2 Wet systems are recommended for storage occupancies. Dry pipe systems should be permitted only where it is impractical to provide heat.

20.13.2.1 Sprinkler systems shall be wet pipe systems.

Fires in storage occupancies can grow very quickly and release large quantities of hot gases. To control or suppress fires in storage occupancies, the best option is always to use wet pipe systems where possible, which release water as soon as the sprinklers open. For situations where the piping will be subject to freezing, such as unconditioned warehouses in cold climates and cold storage warehouses, wet pipe systems are not practical solutions, so dry pipe or preaction systems are permitted as long as they are designed and installed in accordance with 20.13.3.

EDUFIRE.IR

20.13.2.2* In areas that are subject to freezing or where special conditions exist, dry pipe systems and preaction systems shall be permitted to protect storage occupancies.

A.20.13.2.2 Wet systems are recommended for rack storage occupancies. Dry systems are permitted only where it is impractical to provide heat. Preaction systems should be considered for rack storage occupancies that are unheated, particularly where in-rack sprinklers are installed or for those occupancies that are highly susceptible to water damage.

Preaction systems can be particularly helpful in cold storage situations. Dry pipe systems have the potential to allow water into the system piping upon a loss in air pressure, whereas a preaction system can be designed that does not allow water into the piping if air is lost in the system. Getting water into sprinkler system piping in a freezer storage warehouse can be a particularly difficult problem because there is no way to get the ice out of the piping after the water freezes without taking the freezer out of service or completely removing the sprinkler system piping and thawing it outside the freezer. The double interlock preaction system was invented specifically to provide protection for freezer storage warehouses to make sure that water does not flow into the piping until both the sprinkler system and the alarm system agree that there is a fire. This same concept should be considered where the product is highly susceptible to water damage.

The use of a dry system with in-rack sprinklers can present a unique challenge with the large amount of trapped piping resulting from supply piping dropping down into the rack structure to feed the in-rack sprinklers. As a result, it is further recommended that the use of a wet system be considered for system designs that include in-rack sprinklers.

ESFR sprinklers provide suppression for a wide range of storage commodities. To provide suppression, the water needs to discharge from the sprinklers as soon as the sprinklers open. Any delay in discharging water could prevent the sprinklers from achieving suppression of the fire. There are two options for using ESFR sprinklers in a freezing environment. The first is to use ESFR sprinklers with an antifreeze system. The second option is to use dry pendent ESFR sprinklers attached to a wet pipe system outside the freezing environment. To use ESFR sprinklers with an antifreeze solution, the ESFR sprinkler must be specifically listed with the antifreeze solution provided by 8.6.2.

Dry pendent ESFR sprinklers can be used to protect storage warehouses, but the traditional warehouse should be redesigned to accomplish this correctly. To connect the dry pendent ESFR sprinkler to wet piping, the wet piping must be installed in a heated space above the freezer. Typically, freezer storage warehouses have no space above them in which water-filled pipe can be installed. But with a redesign that includes a heated space above the freezer, water-filled piping can be installed with dry pendent ESFR sprinklers penetrating down into the freezer.

FAQ [20.13.2.2]

Can ESFR sprinklers be used in freezing environments?

To use ESFR sprinklers in freezing environments, the sprinklers need to be connected to a wet pipe system unless specifically listed for use on a dry system as provided by 14.2.2. As of the writing of this handbook, no ESFR sprinklers currently are listed for use on a dry system.

20.13.3 Dry Pipe and Preaction Systems. For dry pipe systems and preaction systems using control mode density/area (CMDA) criteria, the area of sprinkler operation shall be increased by 30 percent without revising the density.

20.14* Protection of Idle Pallets.

A.20.14 Idle pallet storage introduces a severe fire condition. Stacking idle pallets in piles is the best arrangement of combustibles to promote rapid spread of fire, heat release, and complete combustion. After pallets are used for a short time in warehouses, they dry out and edges become frayed and splintered. In this condition, they are subject to easy ignition from a small ignition source. Again, high piling increases considerably both the challenge to sprinklers and the probability of involving a large number of pallets when fire occurs. Therefore, it is preferable to store pallets outdoors where possible.

A fire in stacks of idle plastic or wood pallets is one of the greatest challenges to sprinklers. The undersides of the pallets create a dry area on which a fire can grow and expand to other dry or partially wet areas. This process of jumping to other dry, closely located, parallel, combustible surfaces continues until the fire bursts through the top of the stack. Once this happens, very little water is able to reach the base of the fire. The only practical method of stopping

EDUFIRE.IR

a fire in a large concentration of pallets with ceiling sprinklers is by means of prewetting. In high stacks, this cannot be done without abnormally high water supplies. The storage of empty wood pallets should not be permitted in an unsprinklered warehouse containing other storage.

A series of seven large-scale fire tests involving idle wood pallets stored on the floor was conducted at Underwriters Laboratories in 2009 and 2010. This testing was conducted to investigate the performance of an upright sprinkler having a nominal K-factor of 11.2 (160) when installed to protect a 8 ft (2.4 m) high array of new 4-way entry, softwood pallets under a 30 ft (9.1 m) ceiling. The pallets used for this test series were supplied by CHEP USA. The impact of the sprinkler temperature rating on fire control performance was the key variable investigated during this test series. Except for the temperature rating of the sprinkler's heat responsive element, the same sprinkler design was used for all seven tests. Three tests were conducted using 286°F (141°C) temperature-rated sprinklers, two tests were conducted using 200°F (93°C) temperature-rated sprinklers, and two tests conducted using 155°F (68°C) temperature-rated sprinklers. The ignition location for all tests was centered between four sprinklers. To enhance test repeatability, the four sprinklers nearest the ignition location were arranged to discharge water when the first sprinkler operated. The results of this test series are summarized in Table A.20.14.

The results of this large-scale fire test series indicated that sprinklers in the 155°F (68°C) and 200°F (93°C) temperature ratings performed significantly better than the 286°F (141°C) temperature-rated sprinklers as evidenced by a reduced number of operated sprinklers and lower steel temperatures.

20.14.1 Wood Pallets.

20.14.1.1* Wood pallets shall be permitted to be stored in the following arrangements:

(1) Stored outside
(2) Stored in a detached structure
(3) Stored indoors where arranged and protected in accordance with 20.14.1.2

TABLE A.20.14 *Summary of Fire Test Data for Idle Pallets (4-Way Entry Softwood) Stored on Floor*

Test Date	*Test Array*	*Nominal Storage Height ft (m)*	*Ceiling Height ft (m)*	*Sprinkler Information*	*Number of Operated Sprinklers*	*Time of First Sprinkler Operation (min:sec)*	*Time of Last Sprinkler Operation (min:sec)*	*Max. 1 Min. Ave. Steel Temp. ºF (ºC)*
9/1/2009	2 × 3 with 6 in. (150 mm) longitudinal flue main array 2 × 1 target pallets on each end with 6 in. (150 mm) longitudinal and transverse flues	8 (2.4)	30 (9.1)	286ºF, K-11.2, 0.45 gpm/ft^2 (141ºC, K-160, 18.3 mm/min)	12	5:00	23:03	220 (104)
9/10/2009	2 × 3 with 6 in. (150 mm) longitudinal flue main array 2 × 1 target pallets on each end with 6 in. (150 mm) longitudinal and transverse flues	8 (2.4)	30 (9.1)	286ºF, K-11.2, 0.45 gpm/ft^2 (141ºC, K-160, 18.3 mm/min)	13	5:05	19:10	208 (98)

(Continues)

EDUFIRE.IR

TABLE A.20.14 Continued

Test Date	*Test Array*	*Nominal Storage Height ft (m)*	*Ceiling Height ft (m)*	*Sprinkler Information*	*Number of Operated Sprinklers*	*Time of First Sprinkler Operation (min:sec)*	*Time of Last Sprinkler Operation (min:sec)*	*Max. 1 Min. Ave. Steel Temp. ºF (ºC)*
9/11/2009	2 × 3 with 6 in. (150 mm) longitudinal flue main array 2 × 1 target pallets on each end with 6 in. (150 mm) longitudinal and transverse flues	8 (2.4)	30 (9.1)	286ºF, K-11.2, 0.45 gpm/ft^2 (141ºC, K-160, 18.3 mm/min)	16	5:48	19:04	228 (109)
6/21/2010	2 × 3 with 6 in. (150 mm) longitudinal flue main array 2 × 1 target pallets on each end with 6 in. (150 mm) longitudinal and transverse flues	8 (2.4)	30 (9.1)	200ºF, K-11.2, 0.45 gpm/ft^2 (93ºC, K-160, 18.3 mm/min)	4	4:10	4:10	134 (57)
6/22/2010	2 × 3 with 6 in. (150 mm) longitudinal flue main array 2 × 1 target pallets on each end with 6 in. (150 mm) longitudinal and transverse flues	8 (2.4)	30 (9.1)	200ºF, K-11.2, 0.45 gpm/ft^2 (93ºC, K-160, 18.3 mm/min)	4	3:34	3:34	135 (57)
6/23/2010	2 × 3 with 6 in. (150 mm) longitudinal flue main array 2 × 1 target pallets on each end with 6 in. (150 mm) longitudinal and transverse flues	8 (2.4)	30 (9.1)	155ºF, K-11.2, 0.45 gpm/ft^2 (68ºC, K-160, 18.3 mm/min)	4	3:46	3:46	115 (46)
6/23/2010	2 × 3 with 6 in. (150 mm) longitudinal flue main array 2 × 1 target pallets on each end with 6 in. (150 mm) longitudinal and transverse flues	8 (2.4)	30 (9.1)	155ºF, K-11.2, 0.45 gpm/ft^2 (68ºC, K-160, 18.3 mm/min)	4	3:09	3:09	113 (45)

EDUFIRE.IR

A.20.14.1.1 Table A.20.14.1.1(a) gives recommended clearances between outside idle wood pallet storage and a building. If plastic pallets are stored outdoors, consideration should be given to the anticipated radiated heat produced by the materials used to construct the pallet to establish the appropriate separation distance. *[See Table A.20.14.1.1(b).]*

TABLE A.20.14.1.1(a) *Control Mode Density/Area Sprinkler Protection for Indoor Storage of Idle Wood Pallets*

Type of Sprinkler	*Location of Storage*	*Nominal K-Factor*	*Maximum Storage Height*		*Maximum Ceiling/ Roof Height*		*Sprinkler Density*		*Area of Operation*		*Hose Stream Allowance*		*Water Supply Duration (hours)*
			ft	*m*	*ft*	*m*	*gpm/ft²*	*mm/min*	*ft²*	*m²*	*gpm*	*L/min*	
Control mode density/ area	On floor	8 (115) or larger	Up to 6	Up to 1.8	20	6.1	0.2	8.2	3000*	280*	500	1900	1½
	On floor	11.2 (160) or larger	Up to 8	Up to 2.4	30	9.1	0.45	18.3	2500	230	500	1900	1½
	On floor or rack without solid shelves	11.2 (160) or larger	>8 to 12	>2.4 to 3.7	30	9.1	0.6	24.5	3500	325	500	1900	1½
			>12 to 20	>3.7 to 6.1	30	9.1	0.6	24.5	4500	420	500	1900	1½
	On floor	16.8 (240) or larger	Up to 20	Up to 6.1	30	9.1	0.6	24.5	2000	185	500	1900	1½

*The area of sprinkler operation can be permitted to be reduced to 2000 ft² (185 m²) when sprinklers having a nominal K-factor of 11.2 (160) or larger are used, or if high temperature–rated sprinklers having a nominal K-factor of 8.0 (115) are used.

TABLE A.20.14.1.1(b) *Recommended Clearance Between Outside Idle Wood Pallet Storage and Building*

Wall Construction		*Minimum Distance Between Wall and Storage*					
		Under 50 Pallets		*50 to 200 Pallets*		*Over 200 Pallets*	
Wall Type	*Openings*	*ft*	*m*	*ft*	*m*	*ft*	*m*
Masonry	None	0	0	0	0	0	0
	Wired glass with outside sprinklers and 1-hour doors	0	0	10	3.0	20	6.1
	Wired or plain glass with outside sprinklers and ¾-hour doors	10	3.0	20	6.1	30	9.1
Wood or metal with outside sprinklers		10	3.0	20	6.1	30	9.1
Wood, metal, or other		20	6.1	30	9.1	50	15

Notes:

(1) Fire-resistive protection comparable to that of the wall also should be provided for combustible eaves lines, vent openings, and so forth.

(2) Where pallets are stored close to a building, the height of storage should be restricted to prevent burning pallets from falling on the building.

(3) Manual outside open sprinklers generally are not a reliable means of protection unless property is attended to at all times by plant emergency personnel.

(4) Open sprinklers controlled by a deluge valve are preferred.

EDUFIRE.IR

20.14.1.2 Wood pallets, where stored indoors, shall be protected in accordance with one of the following:

(1) Control mode density/area sprinkler protection as specified in Table 20.14.1.2(a).
(2) CMSA sprinkler protection in accordance with Table 20.14.1.2(b).
(3) ESFR sprinkler protection in accordance with Table 20.14.1.2(c).
(4) Control mode density/area sprinkler protection in accordance with the Ordinary Hazard Group 2 curve and Figure 19.3.3.1.1 with a hose stream demand of at least 250 gpm (950 L/min) for a duration of at least 60 minutes when pallets are stored no higher than 6 ft (1.8 m) and each pile of no more than four stacks is separated from other pallet piles by at least 8 ft (2.4 m) of clear space or 25 ft (7.6 m) of commodity. The maximum clearance to ceiling of 20 ft (6.1 m) specified in 20.6.4 shall not apply to arrangement 20.14.1.2(4).

Item (4) of 20.14.1.2 includes an exception to the density/area requirements of item (1) of 20.14.1.2 for practical reasons. Many owners of buildings that are sprinklered in accordance with the rules of ordinary hazard (Group 2) occupancies, such as grocery stores, product manufacturing, and light industrial use, receive products on wood pallets. After the products are used or relocated, the empty pallets must be stacked somewhere, as shown in Exhibit 20.21. The requirement in 20.14.1.2(4) provides the owner with guidance on where to put a small stack of pallets not more than 6 ft (1.8 m) high without needing to increase the sprinkler protection to that required by 20.14.1.2(1). The owner needs to be aware of the requirements to keep stacked wood pallets away from other pallets and commodities to ensure that a fire starting in the stacked pallets does not spread. If such a fire were to spread to other adjacent combustibles, the intensity of the fire might overwhelm an ordinary hazard sprinkler system.

20.14.1.2.1 The maximum clearance to ceiling of 20 ft (6.1 m) specified in 20.6.4 shall not apply to arrangement 20.14.1.2(4).

20.14.1.3 Idle wood pallets shall not be stored in racks unless they are protected in accordance with the appropriate requirements of Table 20.14.1.2(a) or Table 20.14.1.2(c). *(See Section C.7.)*

C.7 [20.14.1.3] No tests were conducted with idle pallets in racks using standard spray sprinklers. However, tests were conducted using ESFR and large drop sprinklers. Such storage conceivably would introduce fire severity in excess of that contemplated by protection criteria for an individual commodity classification.

As the commentary for 20.14.1 explains, idle wood pallets create an extremely challenging fire to fight. When idle wood pallets are stacked on the floor, one of the characteristics that helps to achieve fire control

EXHIBIT 20.21 *Idle Pallet Storage Arrangement That Meets Conditions of 20.14.1.2(4).*

EDUFIRE.IR

TABLE 20.14.1.2(a) *Control Mode Density/Area Sprinkler Protection for Indoor Storage of Idle Wood Pallets*

Type of Sprinkler	Location of Storage	Nominal K-Factor	Maximum Storage Height		Maximum Ceiling/Roof Height		Sprinkler Density		Areas of Operation	
			ft	m	ft	m	gpm/ft²	mm/min	ft²	m²
Control mode density/area	On floor	8 (115) or larger	Up to 6	Up to 1.8	20	6.1	0.20	8.2	3000*	280*
	On floor	11.2 (160) or larger	Up to 8	Up to 2.4	30	9.1	0.45	18.3	2500	230
	On floor or rack without solid shelves	11.2 (160) or larger	8 to 12	2.4 to 3.7	30	9.1	0.6	24.5	3500	325
			12 to 20	3.7 to 6.1	30	9.1	0.6	24.5	4500	420
	On floor	16.8 (240) or larger	Up to 20	Up to 6.1	30	9.1	0.6	24.5	2000	185

*The area of sprinkler operation should be permitted to be reduced to 2000 ft² (186 m²) when sprinklers having a nominal K-factor of 11.2 or larger are used or if high-temperature-rated sprinklers with a nominal K-factor of 8.0 are used.

TABLE 20.14.1.2(b) *CMSA Sprinkler Protection for Indoor Storage of Idle Wood Pallets*

Storage Arrangement	Commodity Class	Maximum Storage Height		Maximum Ceiling/Roof Height		K-Factor/ Orientation	Type of System	Number of Design Sprinklers	Minimum Operating Pressure	
		ft	m	ft	m				psi	bar
On floor	Idle wood pallets	20	6.1	30	9.1	11.2 (160) Upright	Wet	15	25	1.7
							Dry	25	25	1.7
						16.8 (240) Upright	Wet	15	15	1.0
							Dry	25	15	1.0
						19.6 (280) Pendent	Wet	15	16	1.1
				35	11	19.6 (280) Pendent	Wet	15	25	1.7
				40	12	19.6 (280) Pendent	Wet	15	30	2.1

TABLE 20.14.1.2(c) *ESFR Sprinkler Protection for Indoor Storage of Idle Wood Pallets*

Type of Sprinkler (Orientation)	Location of Storage	Nominal K-Factor	Maximum Storage Height		Maximum Ceiling/ Roof Height		Minimum Operating Pressure	
			ft	m	ft	m	psi	bar
ESFR (pendent)	On floor or rack without solid shelves	14.0 (200)	25	7.6	30	9.1	50	3.4
			25	7.6	32	10	60	4.1
		16.8 (240)	25	7.6	30	9.1	35	2.4
			25	7.6	32	10	42	2.9
			35	11	40	12	52	3.6
		22.4 (320)	25	7.6	30	9.1	25	1.7
			30	9.1	35	11	35	2.4
			35	11	40	12	40	2.7
		25.2 (360)	25	7.6	30	9.1	15	1.0
			30	9.1	35	11	20	1.4
			35	11	40	12	25	1.7
ESFR (upright)	On floor	14.0 (200)	20	6.1	30	9.1	50	3.4
			20	6.1	35	11	75	5.2
		16.8 (240)	20	6.1	30	9.1	35	2.4
			20	6.1	35	11	52	3.6

EDUFIRE.IR

is the collapse of the pallets inward as the fire consumes the pallets low in the pile. The collapse cuts off the flow of oxygen to the burning surfaces and slows down the process by which additional fuel becomes available to the fire. But in a rack situation, the rack structure does not allow the collapse of the piles and continues to hold the fuel of the pallets available for combination with the oxygen in the air, making it more difficult to fight a fire in a stack of idle wood pallets on a rack structure. Specific criteria have been worked out for density/area sprinklers and ESFR sprinklers to protect idle wood pallets on racks. While no criteria are provided here for the protection of idle wood pallets in racks protected with CMSA sprinklers, it is entirely possible that criteria will be developed in the future that will appear in this section, in the manufacturer's literature for specially listed sprinklers, or in Chapter 22 or Chapter 24.

20.14.2 Plastic Pallets.

Idle plastic pallets have the potential to create even more significant fires than idle wood pallets. Plastic pallets have the same surface area as wood pallets, allowing fuel to mix with oxygen, but they also have a fuel with a higher potential heat release rate than wood. For this reason, plastic pallets generally require more protection than wood pallets, with a few exceptions. Some plastic pallets are manufactured with special fire-retardant features that allow them to burn similarly to wood pallets. In cases where idle pallets are tested and listed for their ability to burn like idle wood pallets, the idle plastic pallets can be protected as wood pallets rather than plastic. Tests have shown that storage on top of plastic pallets that allow a commodity to burn as if it were on a wood pallet is not sufficient for this change in fire protection. The tests discussed in Section 20.3 of NFPA 13 that allow commodities to be stored on plastic pallets without increasing the commodity classification do not necessarily prove that a whole stack of plastic pallets will burn like wood pallets. Additional tests might be necessary to prove that point. Any special listing of plastic pallets will need to be carefully reviewed to make sure that it allows storage of idle pallets as wood pallets in order to apply the requirement in 20.14.2.2.1.

20.14.2.1 Plastic pallets shall be permitted to be stored in the following manner:

(1) Plastic pallets shall be permitted to be stored outside.
(2) Plastic pallets shall be permitted to be stored in a detached structure.
(3) Plastic pallets shall be permitted to be stored indoors where arranged and protected in accordance with the requirements of 20.14.2.2.

20.14.2.2 Protection Criteria for Plastic Pallets Stored Indoors.

20.14.2.2.1 Plastic pallets having a demonstrated fire hazard that is equal to or less than idle wood pallets and is listed for such equivalency shall be permitted to be protected in accordance with 20.14.1.

20.14.2.2.2 When specific test data are available, the data shall take precedence in determining the required protection of idle plastic pallets.

20.14.2.2.3 Protection with ESFR sprinklers shall be in accordance with the requirements of Table 20.14.2.2.3.

TABLE 20.14.2.2.3 *ESFR Sprinkler Protection for Indoor Storage of Idle Plastic Pallets*

Type of Sprinkler (Orientation)	*Location of Storage*	*Nominal K-Factor*	*Maximum Storage Height*		*Maximum Ceiling/ Roof Height*		*Minimum Operating Pressure*	
			ft	*m*	*ft*	*m*	*psi*	*bar*
ESFR (pendent)	On floor or rack without solid shelves	14.0 (200)	25	7.6	30	9.1	50	3.4
			25	7.6	32	10	60	4.1
			25	7.6	30	9.1	35	2.4
		16.8 (240)	25	7.6	32	10	42	2.9
			35	11	40	12	52	3.6

EDUFIRE.IR

20.14.2.2.4 Protection with spray sprinklers shall be in accordance with one of the scenarios in 20.14.2.2.4.1 through 20.14.2.2.4.3.

Paragraph 20.14.2.2.4 provides the user of NFPA 13 with two options for the protection of idle plastic pallets with density/area sprinklers. The first option is to put the idle pallets in their own special room, called a "cutoff room," with significant walls separating that room from the rest of the building and at least one exterior wall so that the fire cannot spread through the building in all directions from the room. If the option of building a separate room for the idle plastic pallets is selected (see 20.14.2.2.4.1), the room must be protected with sprinklers having an orifice size of K-11.2 (K-160) or larger and a density of at least 0.6 gpm/ft^2 (24.5 mm/min) over the entire room, unless the owner has installed a high-expansion foam system in the room. Where the cutoff room is selected as an option, the owner would be permitted to store idle plastic pallets up to 12 ft (3.7 m) in height.

If the plastic pallets are not to be stored in a cutoff room, the protection criteria of 20.14.2.2.4.2 limit the pallet storage to 10 ft (3.0 m) in height, limit the ceiling of the building to 30 ft (9.1 m) in height, and require that the sprinkler used to protect the pallets has an orifice of K-16.8 (K-240) or larger. In fire tests, the larger orifice sprinkler is shown to be necessary to create water droplets that will penetrate the fire plume and absorb sufficient heat to keep the fire from spreading to adjacent combustibles. With this option, no physical separation of the pallets is required. However, if there is no physical separation, the sprinkler demand for protection of the plastic pallets has to be carried 15 ft (4.6 m) into the design area of the adjacent hazard if that hazard requires a density less than 0.6 gpm/ft^2 (24.5 mm/min) for protection.

20.14.2.2.4.1 Where plastic pallets are stored in cutoff rooms, the following shall apply:

(1) The cutoff rooms shall have at least one exterior wall.
(2) The plastic pallet storage shall be separated from the remainder of the building by 3-hour-rated fire walls.
(3) The storage shall be protected by sprinklers designed to deliver 0.6 gpm/ft^2 (24.5 mm/min) for the entire room or by high-expansion foam and sprinklers designed to deliver 0.3 gpm/ft^2 (12.2 mm/min) for the entire room.
(4) The storage shall be piled no higher than 12 ft (3.7 m).
(5) Any steel columns shall be protected by 1-hour fireproofing or a sidewall sprinkler directed to one side of the column at the top or at the 15 ft (4.6 m) level, whichever is lower. Flow from these sprinklers shall be permitted to be omitted from the sprinkler system demand for hydraulic calculations.

20.14.2.2.4.2 Where plastic pallets are stored without cutoffs from other storage, the following shall apply:

(1) Maximum storage height of 10 ft (3.0 m)
(2) Maximum ceiling height of 30 ft (9.1 m)
(3) Sprinkler density 0.6 gpm/ft^2 over 2000 ft^2 (24.5 mm/min over 185 m^2)
(4) Minimum sprinkler K-factor of 16.8 (240)

20.14.2.2.4.3 Plastic pallets shall have no impact on the required sprinkler protection when stored as follows:

(1) Storage shall be piled no higher than 4 ft (1.2 m).
(2) Sprinkler protection shall employ high temperature–rated sprinklers.
(3) Each pallet pile of no more than two stacks shall be separated from other pallet piles by at least 8 ft (2.4 m) of clear space or 25 ft (7.6 m) of stored commodity.
(4) Minimum ceiling design of OH2 shall be used.

Many owners of buildings that are sprinklered in accordance with the rules of ordinary hazard (Group 2) occupancies, such as grocery stores, product manufacturing, and light industrial use, receive products on plastic pallets. After the products are used or relocated, the empty pallets need to be stacked somewhere. The requirements in 20.14.2.2.4.3 provide the owner with guidance on where to put a small stack of pallets not more than 4 ft (1.2 m) high without needing to increase the sprinkler protection above ordinary hazard

EDUFIRE.IR

(Group 2). The owner needs to be aware of the requirements to keep stacked pallets away from other pallets and commodities to ensure that a fire starting in the stacked pallets does not spread. If such a fire were to spread to other adjacent combustibles, the intensity of the fire might overwhelm an ordinary hazard sprinkler system.

20.14.2.3 Idle plastic pallets shall be stored only in racks where protected in accordance with the requirements of Table 20.14.2.2.3.

20.14.2.3.1 When specific test data and a product listing are available, the data shall take precedence in determining the required protection of idle plastic pallets stored in racks.

20.14.3 Idle Pallets Stored on Racks, on Shelves, and Above Doors.

20.14.3.1 Idle pallets shall not be stored on racks or shelves, except where permitted in 20.14.1.3, 20.14.2.3, and 20.14.3.2.

20.14.3.2 Idle pallets shall be permitted to be stored on the lowest level of storage only where no storage or shelves are located above the stored pallets and the applicable protection criteria referenced for on-floor storage in Section 20.14 are applied.

N **20.14.3.3** Where idle pallet storage is above a door, the idle pallet storage height and ceiling height shall be calculated from the base of storage above the door using the applicable protection criteria referenced in Section 20.14.

N 20.15 Column Protection: Rack Storage and Rubber Tire Storage.

Fires in rubber tire storage greater than 15 ft (4.6 m) in height have the potential to generate sufficient heat to cause steel columns exposed to the racks to fail relatively early in the fire scenario. To ensure that the steel columns that support the building do not fail and cause the building to collapse, steel columns exposed to the rack structure need to be protected in some way.

Editions of NFPA 13 prior to 2016 had required protection for only those columns located within the rack structure. The current criteria in 20.15.1 specifically require protection for columns that are sufficiently close to the rack to be exposed to the fire development. A column positioned within 12 in. (300 mm) of the horizontal projection of the overall rack footprint, including the flue spaces, is considered exposed and requires protection. In addition to protection for columns, 20.15.1.1 also requires protection for rack structures that support the building. These conditions are not specifically addressed in 20.15.2 as they are in 20.15.1.1, but such conditions should be considered.

One way to protect the exposed steel is by covering it. The covering could be gypsum board with a specific fire resistance rating or a spray-on fireproofing material. If the steel is properly covered, no additional protection from the sprinkler system is required.

The requirements in 20.15.2 only require additional consideration from the sprinkler system when the steel is exposed. There are several methods for protecting exposed steel with installed sprinklers, including in-rack sprinklers to limit the fire growth and heat generation within the rack, sidewall sprinklers to spray water directly on the steel column to keep it cool, or ESFR or CMSA sprinklers at the ceiling that produce sufficient discharge to penetrate the fire plume and keep the fire from getting hot enough to damage the steel.

C.10 [20.15] Temperatures in the test column were maintained below 1000°F (538°C) with densities, of roof ceiling sprinklers only, of 0.375 gpm/ft^2 (15.3 mm/min) with 8 ft (2.4 m) aisles and 0.45 gpm/ft^2 (18.3 mm/min) with 4 ft (1.2 m) aisles using the standard commodity.

20.15.1* Where fireproofing of building columns is not provided and storage heights are in excess of 15 ft (4.6 m), protection of building columns located wholly or partially within the rack footprint inclusive of flue spaces or within 12 in. (300 mm) of the footprint shall be protected in accordance with one of the following:

EDUFIRE.IR

(1) In-rack sprinklers
(2) Sidewall sprinklers at the 15 ft (4.6 m) elevation, pointed toward one side of the steel column
(3) Provision of ceiling sprinkler density for a minimum of 2000 ft^2 (186 m^2) with ordinary 165°F (74°C) or high-temperature 286°F (140°C) rated sprinklers as shown in Table 20.15.1 for storage heights above 15 ft (4.6 m), up to and including 20 ft (6.1 m)
(4) Provision of CMSA or ESFR ceiling sprinkler protection

TABLE 20.15.1 *Ceiling Sprinkler Densities for Protection of Steel Building Columns*

	Aisle Width			
	4 ft (1.2 m)		***8 ft (2.4 m)***	
Commodity Classification	***gpm/ft^2***	***mm/min***	***gpm/ft^2***	***mm/min***
Class I	0.37	15.1	0.33	13.4
Class II	0.44	17.9	0.37	15.1
Class III	0.49	20.0	0.42	17.1
Class IV and Group A plastics	0.68	27.7	0.57	23.2

A.20.15.1 Columns at the ends of racks or in the aisles need to be protected from the heat of a fire in the racks if they are near the racks. Columns within the flue spaces are already within the footprint of the racks and need protection. In Figure A.20.15.1, Column 1 is within the flue space and needs protection. Column 2 is within 12 in. (300 m) of the rack and needs protection. Column 3 is more than 12 in. (300 m) away from the rack and does not need protection even though it is in an aisle. A portion of Column 4 is within 12 in. (300 m) of the rack and therefore requires sprinkler protection.

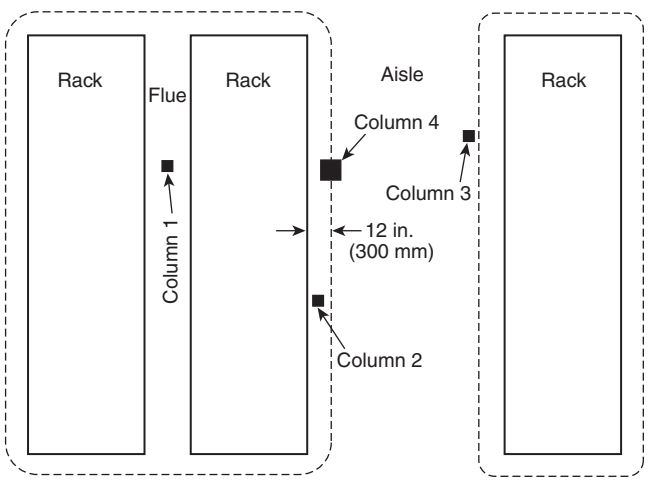

FIGURE A.20.15.1 *Protection of Columns Within and Adjacent to Rack Structure.*

20.15.1.1 Where storage heights are in excess of 15 ft (4.6 m) and vertical rack members support the building structure, the vertical rack members shall be protected in accordance with one of the options in 20.15.1.

20.15.1.2 The flow from a column sprinkler(s) shall be permitted to be omitted from the sprinkler system hydraulic calculations.

EDUFIRE.IR

20.15.2 Columns Within Rubber Tire Storage.

20.15.2.1 Where fireproofing is not provided, steel columns shall be protected as follows:

(1) Storage exceeding 15 ft through 20 ft (4.6 m through 6.1 m) in height — one sidewall sprinkler directed to one side of the column at a 15 ft (4.6 m) level
(2) Storage exceeding 20 ft (6.1 m) in height — two sidewall sprinklers, one at the top of the column and the other at a 15 ft (4.6 m) level, both directed to the side of the column

20.15.2.2 The flow from a column sprinkler(s) shall be permitted to be omitted from the sprinkler system hydraulic calculations.

20.15.2.3 The protection specified in 20.15.2.1(1) and 20.15.2.1(2) shall not be required where storage in fixed racks is protected by in-rack sprinklers.

20.15.2.4 The protection specified in 20.15.2.1 shall not be required where ESFR or CMSA sprinkler systems that are approved for rubber tire storage are installed.

20.15.2.5 The rate of water supply shall be sufficient to provide the required sprinkler discharge density over the required area of application plus provision for generation of high-expansion foam and in-rack sprinklers where used.

References Cited in Commentary

National Fire Protection Association, 1 Batterymarch Park, Quincy, MA 02169-7471.
NFPA 14, *Standard for the Installation of Standpipe and Hose Systems*, 2016 edition.
NFPA 231, *Standard for General Storage*, 1998 edition. (Document was incorporated into 1999 edition of NFPA 230, which was then incorporated into 2006 edition of NFPA 1.)
NFPA 231C, *Standard for Rack Storage of Materials*, 1998 edition. (Portions pertaining to design and installation of automatic sprinkler system were incorporated into the 1999 edition of NFPA 13. Remaining portions were incorporated into 1999 edition of NFPA 230.)

Fire Protection Research Foundation, 1 Batterymarch Park, Quincy, MA 02169-7471.
International Fire Sprinkler/Smoke & Heat Vent/Draft Curtain Fire Test Project: Heptane Burner Tests and Commodity Tests, April 1998.
International Fire Sprinkler/Smoke & Heat Vent/Draft Curtain Fire Test Project: Large Scale Experiments and Model Development, September 1998.
International Fire Sprinkler/Smoke & Heat Vent/Draft Curtain Fire Test Project: Scoping Tests, May 1997.
High Volume/Low Speed Fan and Sprinkler Operation — Phase II, January 2011.

FM Global, 270 Central Avenue, P.O. Box 7500, Johnston, RI 02919.
ANSI/FM 4996, *American National Standard for Classification of Idle Plastic Pallets as Equivalent to Wood Pallets*, 2007.

International Code Council, 500 New Jersey Avenue, NW, 6th Floor, Washington, DC 20001.
International Building Code, 2018.

Underwriters Laboratories Inc., 333 Pfingsten Road, Northbrook, IL 60062-2096.
UL 2335, *Standard for Fire Tests of Storage Pallets*, 2001.

EDUFIRE.IR

Protection of High Piled Storage Using Control Mode Density Area (CMDA) Sprinklers

CHAPTER

21

REORGANIZATION NOTE

Chapter 21 is a new chapter that consolidates all the control mode density/area (CMDA) sprinkler criteria. All the charts, curves, and tables relative to CMDA are now in one location and not intermixed with other sprinkler technologies.

21.1 General.

N **21.1.1** The criteria in Chapter 20 shall apply to storage protected with CMDA sprinklers.

21.1.2* For storage applications with densities of 0.2 gpm/ft^2 (8.2 mm/min) or less, standard-response sprinklers with a K-factor of K-5.6 (80) or larger shall be permitted.

Storage commodity fires have become more challenging over the years, and the flow demand from the sprinkler to control or suppress such fires has increased. It has been recognized that water droplet momentum (the product of mass times velocity of the water droplet as it moves toward the floor from the sprinkler) is critical to achieving fire control or suppression. Fire tests and fire experience have shown that K-5.6 sprinklers, discharging at the pressure necessary to protect high-challenge storage fires, do not produce as many large water droplets as would be ideal for developing good droplet momentum. Therefore, the use of those sprinklers for new projects has been limited to less challenging storage commodities, which are defined by way of design density. Storage situations that need a density of only 0.2 gpm per ft^2 (8.2 mm/min) or less are less demanding than most storage occupancies and are valid for K-5.6 orifice size sprinklers.

Note that this rule applies only to storage occupancies. Sprinklers with K-5.6 orifice sizes are permitted to be used for any ordinary or extra hazard situation, even where the discharge density requirement is greater than 0.2 gpm per ft^2 (8.2 mm/min).

Also note that this rule pertains only to new systems, with one exception. Existing systems that were designed and installed under older editions of NFPA 13 before this requirement went into effect are permitted to remain in use (see 21.1.5). There is no retroactive requirement in the standard that would require the replacement of K-5.6 (K-80) sprinklers on an older system where they were correctly used in conformance with an earlier edition of NFPA 13. The one exception to the existing system situation involves instances where a design density of 0.6 gpm per ft^2 (24.5 mm/min) is required to protect Group A plastics, per Table 21.5.1.1. In those limited cases, the existing system needs to use sprinklers with K-factors of 11.2 or greater. Existing systems should never have been permitted to protect this commodity with K-5.6 (K-80) or K-8.0 (K-115) sprinklers, but through an unusual series of changes to the standard, it could be interpreted that an existing system could be used in this manner. As a result, 21.1.6 was specifically written to prohibit the use of K-5.6 (K-80) or K-8.0 (K-115) sprinklers for this one commodity storage arrangement.

A.21.1.2 The reasons for using larger orifice sprinklers in storage situations are based on a number of fire tests in recent years that continue to show an advantage of the larger orifice [K-11.2 (161) and K-16.8 (242)] sprinklers over the K-5.6 (80) and even the K-8 (115) orifice sprinklers. Following are four sets of fire test comparisons using constant densities *[see Table A.21.1.2(a) and Table A.21.1.2(b)]*:

EDUFIRE.IR

(1) K-5.6 (80) vs. K-11.2 (161)
  (a) Commodity — idle wood two-way pallets
  (b) 2 stacks × 3 stacks × 8 ft (2.4 m) high
  (c) Ceiling height — 30 ft (9.1 m)
  (d) Density — constant 0.30 gpm/ft^2 (12.2 mm/min)
  (e) Test #1 — 165°F (74°C) rated, K-11.2 sprinklers
  (f) Test #2 — 165°F (74°C) rated, K-5.6 sprinklers
  (g) Test #1 results — 4 A.S. operated
  (h) Test #2 results — 29 A.S. operated, less fire control and greater temperatures
(2) K-8.0 vs. K-11.2 vs. K-16.8
  (a) Commodity — idle wood four-way pallets
  (b) Two stacks × three stacks × 12 ft high (3.7 m)
  (c) Ceiling height — 30 ft (9.1 m)
  (d) Density — constant 0.6 gpm/ft^2 (24.5 mm/min)
  (e) Test #1 — 286°F (141°C) rated, K-8 sprinklers
  (f) Test #2 — 165°F (74°C) rated, K-11.2 sprinklers
  (g) Test #3 — 165°F (74°C) rated, K-16.8 sprinklers
  (h) Test #1 results — 10 A.S. operated, 1215°F (658°C) maximum steel temperature, fire spread to all sides
  (i) Test #2 results — 13 A.S. operated, 200°F (94°C) maximum steel temperature, fire spread to three sides
  (j) Test #3 results — 6 A.S. operated, 129°F (54°C) maximum steel temperature, fire spread (just reached) one side
(3) K-5.6 vs. K-16.8
  (a) Commodity — FMRC standard plastic commodity rack style 9 ft (2.7 m) high
  (b) Ceiling height — 30 ft (9.1 m)
  (c) Density — 0.45 gpm/ft^2 (18.3 mm/min)
  (d) Test #1 — K-5.6 orifice sprinklers
  (e) Test #2 — K-16.8 orifice sprinklers
  (f) Test #1 results — 29 A.S. operated, 14 pallet loads consumed
  (g) Test #2 results — 5 A.S. operated, 2 pallet loads consumed
(4) K-8.0 vs. K-16.8
  (a) Commodity — FMRC standard plastic commodity rack stage 14 ft (4.3 m) high
  (b) Ceiling height — 25 ft (7.6 m)
  (c) Density — 0.60 gpm/ft^2 (24.5 mm/min)
  (d) Test #1 — K-8.0 sprinklers
  (e) Test #2 — K-16.8 sprinklers
  (f) Test #1 results — 29 A.S. operated, 25 pallet loads consumed
  (g) Test #2 results — 7 A.S. operated, 4 pallet loads consumed

On an equal density basis, the fire test comparisons show the advantage of the larger orifices. A possibly even bigger advantage can be seen when investigating the performance of larger orifice sprinklers in the real world condition of high initial operating pressures.

The volume of water discharged through the larger K-factor for the initial sprinklers has three significant effects:

(1) First, the increase in sheer volume flowing through the larger orifice enhances performance. For example, a 165 psi (11 bar) initial operating pressure would provide 102.8 gpm (390 L/min) from a K-8, while the K-16.8 will discharge 215.8 gpm (815 L/min).
(2) Second, fire testing at high pressures [100+ psi (6.9 bar)] with K-5.6 and K-8 (when high fire updrafts occur) has shown less water penetration and more sprinkler skipping. When fire testing the K-11 and K-16.8 sprinklers at 100+ psi (6.9 bar), more water penetration is evident and little or no sprinkler skipping has occurred.

EDUFIRE.IR

(3) Third, with such high initial discharge rates among K-16.8 sprinklers, the friction loss in the supply pipes would be greater. This would result in lower initial pressures than a K-8 as well as being farther down the water supply curve with greater flows resulting in lower initial operating pressures.

Figure A.21.1.2 highlights the differences between the K-8 and K-16.8 initial operating pressures.

TABLE A.21.1.2(a) *Ceiling Type*

Fire Type	*Ceiling Type*	*Sprinkler Distance Below Ceiling [in. (mm)]*	*Time to Activation (seconds)*	*Size of Fire at Activation [Btu/s (kW)]*
Fast-growing fire	Insulated deck	1 (25)	76	450 (475)
	Steel	1 (25)	97	580 (612)
	Wood	1 (25)	71	420 (443)
	Insulated deck	12 (300)	173	1880 (1985)
	Steel	12 (300)	176	1930 (2035)
	Wood	12 (300)	172	1900 (475)
Slow-growing fire	Insulated deck	1 (25)	281	220 (232)
	Steel	1 (25)	375	390 (411)
	Wood	1 (25)	268	200 (211)
	Insulated deck	12 (300)	476	630 (665)
	Steel	12 (300)	492	675 (712)
	Wood	12 (300)	473	620 (654)

TABLE A.21.1.2(b) *Ceiling Arrangement*

Situation	*Fire*	*Time to Activate Sprinkler (seconds)*	*Fire Size at Time of Activation [Btu/s (kW)]*
Ceiling with pocket	Fast	86 to 113	585 (617)
Sprinkler 12 in. below ceiling	Fast	172 to 176	1880 to 1900 (1985 to 2005)
Ceiling with pocket	Slow	288 to 395	490 (517)
Sprinkler 12 in. below ceiling	Slow	473 to 492	620 to 675 (654 to 712)

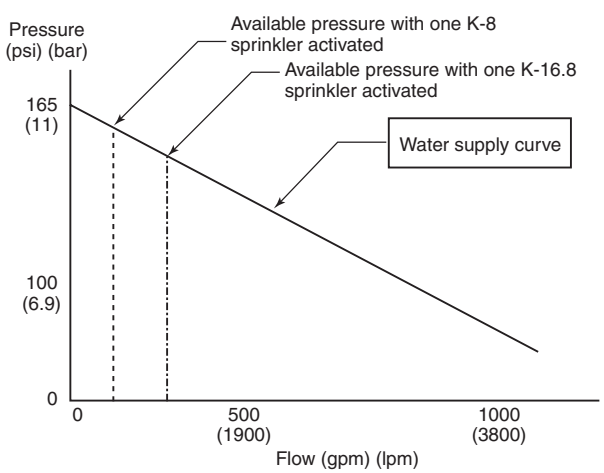

FIGURE A.21.1.2 *Available Pressure Comparison.*

EDUFIRE.IR

The higher flow rate of the K-16.8 sprinkler results in greater friction losses in the initial operating heads as compared to the K-8 sprinkler. Combined with the lower pressure available on the water supply curve, the end result is a self-regulating K-factor allowing greater initial pressures without a negative impact.

Table A.21.1.2(c) summarizes the paper product testing.

The results. The tests indicated that even at a high temperature of 286°F (141°C), the K-8 sprinklers operating at higher pressures were not effective in controlling the fire. Conversely, the K-16.8 sprinkler was able to control the fire at the lower temperature [155°F (68°C)], by operating sooner, and at lower, self-regulating flowing pressures.

Conclusions. The larger K-factor of the K-16.8 sprinkler is not affected by high initial operating pressures. In fact, the protection is enhanced, providing better fire protection.

The ability to use lower-rated temperatures, such as 155°F (68°C) in lieu of 286°F (141°C), shows that the performance of the initial operating sprinklers is effective in controlling the fire. Therefore, using high-temperature sprinklers to reduce the number of surrounding rings of sprinklers to open is not necessary when using the K-16.8 technology.

In short, the K-16.8 sprinkler proved highly effective when subjected to high initial operating pressures.

TABLE A.21.1.2(c) *Paper Product Testing Results*

	Test Date			
Test Parameters	***3/25/98***	***3/18/98****	***4/4/98***	***6/4/98****
Sprinklers	K-8	K-8	K-11	K-16.8
Temperature	286°F (141°C)	286°F (141°C)	165°F (74°C)	155°F (68°C)
Storage Type	4 tier pyramid	5 tier pyramid	4 tier pyramid	5 tier pyramid
Storage Height	16 ft (4.9 m)	22 ft (6.7 m)	16 ft (4.9 m)	22 ft (6.7 m)
Ceiling Height	30 ft (9.1 m)	31 ft (9.1 m)	30 ft (9.1 m)	31 ft (9.1 m)
Sprinkler Flow Pressure	22.6 psi (1.6 bar)	175 psi (12.1 bar)	11.9 psi (0.82 bar)	130 psi (9.0 bar)
Number of Operated Sprinklers	15	2	10	2
Peak Gas Temperature	—	868°F (464°C)	—	424°F (217°C)
Peak Steel Temperature	—	421°F (216°C)	—	113°F (45°C)
Fire Spread Across Aisle (30 in.)	N/A	Yes	N/A	No

*This test was run with a fire brigade response of 20:00 minutes.

†This test was run with a fire brigade response of 7:00 minutes.

21.1.3 For general storage applications, rack storage, rubber tire storage, roll paper storage, and baled cotton storage being protected with upright and pendent spray sprinklers with required densities of greater than 0.2 gpm/ft^2 to 0.34 gpm/ft^2 (8.2 mm/min to 13.9 mm/min), standard-response sprinklers with a nominal K-factor of K-8.0 (115) or larger shall be used.

Similar to the situation discussed in the commentary to 21.1.2, the size of fires that can be protected with K-8.0 (115) sprinklers in storage occupancies is limited to medium-size fires, defined in the standard as those that need 0.34 gpm per ft^2 (13.9 mm/min) or less as a design density. This limitation is only for new systems (not those described in 21.1.5 and 21.1.6) and applies only to storage occupancies.

21.1.4 For general storage applications, rack storage, rubber tire storage, roll paper storage, and baled cotton storage being protected with upright and pendent spray sprinklers with required densities greater than 0.34 gpm/ft^2 (13.9 mm/min), standard-response spray sprinklers with a K-factor of K-11.2 (161) or larger that are listed for storage applications shall be used.

EDUFIRE.IR

Fire tests have shown that sprinklers with larger orifices — K-11.2 or larger — perform better during storage fires with strong fire plumes than sprinklers with smaller orifices at the same design density (see 21.1.2). The design of the deflector, along with the lower pressure at which the sprinkler operates, generally results in water droplets with more momentum leaving the sprinkler and penetrating the fire plume to better achieve fire suppression or control.

21.1.5* Unless the requirements of 21.1.6 are met, the requirements of Table 21.5.1.1 shall not apply to modifications to existing storage application systems, using sprinklers with K-factors of K-8.0 (115) or less.

A.21.1.5 Modification of an existing system includes extending sprinkler protection into adjacent areas.

21.1.6 Where applying the requirements of Table 21.5.1.1 utilizing the design criteria of 0.6 gpm/ft^2 per 2000 ft^2 (24.5 mm/min per 185 m^2) to existing storage applications, the requirements of 21.1.4 shall apply.

21.1.7 The use of quick-response spray sprinklers for storage applications shall be permitted when listed for such use.

In some situations, a storage fire might only be controlled by the sprinkler system. During the time that the sprinkler system has established control but before the final suppression of the fire by fire department personnel, the fire will still be releasing heat into the building. With the significant heat release possible from storage fires and the sensitivity of quick-response sprinklers, there is some concern that more quick-response sprinklers will open remote from the fire and that the water supply will then be incapable of maintaining fire control. As a result, quick-response sprinklers cannot be used interchangeably with standard-response sprinklers unless they are specifically listed for such use.

ASK THE AHJ

Does the authority having jurisdiction determine which type of sprinkler — ESFR, CMSA, or spray sprinkler — must be used for a particular facility?

The sprinkler system designer ordinarily will choose from any of the applicable approaches permitted by NFPA 13. That decision typically is based on the owner/tenant's needs and available water supplies. It is worth noting that the decision as to which sprinkler type to use does not necessarily mean that the same level of protection is provided. Control mode sprinklers with in-rack protection will have a different level of fire control from that of ceiling-only control mode sprinklers, and control mode sprinklers will have a different level of fire control from that of early suppression fast-response (ESFR) sprinklers.

Some quick-response sprinklers have been tested and specifically listed for use in protecting certain storage configurations. Manufacturers of those sprinklers have proven that, as long as their instructions are followed and the sprinkler protection is limited to the commodities under which the sprinklers have been tested, the scenario previously described will not occur and the sprinklers will be capable of maintaining fire control. Only in those limited cases are quick-response sprinklers allowed to be used to protect storage occupancies.

21.1.8 The design figures indicate water demands for ordinary-temperature-rated and nominal high-temperature-rated sprinklers at the ceiling.

Most of the density/area discharge criteria shown in Chapter 20 and Chapter 21 were developed from full-scale fire tests over a period of more than 40 years. In many of those tests, high-temperature sprinklers with K-factors of 8.0 (115) or 5.6 (80) tended to have fewer sprinklers open to provide fire control compared with ordinary-temperature sprinklers with the same orifice size. Some tables and figures in Chapter 20 and Chapter 21 take this difference into account and provide for smaller design areas or lesser densities at the same design area because of that effect.

Where intermediate-temperature sprinklers are used, the design density should follow the criteria for ordinary-temperature sprinklers. See the commentary following 21.1.9 for more information on options within NFPA 13 for use of different temperature-rated sprinklers.

EDUFIRE.IR

21.1.8.1 The ordinary-temperature design densities correspond to ordinary-temperature-rated sprinklers and shall be used for sprinklers with ordinary- and intermediate-temperature classification.

21.1.8.2 The high-temperature design densities correspond to high-temperature-rated sprinklers and shall be used for sprinklers having a high-temperature rating.

21.1.9 Ordinary- and intermediate-temperature sprinklers with K-factors of K-11.2 (161) or larger, where listed for storage, shall be permitted to use the densities for high-temperature sprinklers.

The original fire tests that were conducted to determine the discharge criteria for solid-piled, palletized, and rack storage were conducted with K-5.6 (80) and K-8.0 (115) sprinklers. During those tests, it was noticed that the use of high-temperature sprinklers could significantly reduce the number of sprinklers that opened during a fire, which has the effect of conserving the water supply. Density/area criteria were developed for high-temperature sprinklers with K-5.6 (80) or K-8.0 (115) to take advantage of this conservation by either allowing a reduction in sprinkler densities for the same design area or reducing the design area for the same discharge densities. When the K-11.2 (160) and larger sprinklers were developed, full-scale fire tests showed that the ordinary-temperature sprinklers of these larger orifice sizes performed better than the high-temperature sprinklers of K-5.6 (80) or K-8.0 (115).

The improved discharge quality (increased droplet size and resultant momentum) associated with the larger orifice sprinklers [K-11.2 (160) and larger] provided better fire control and a corresponding reduction in the number of operating sprinklers. As a result, K-11.2 (160) and larger sprinklers are permitted to be used with the more efficient high-temperature curves, even though they are ordinary-temperature sprinklers.

21.1.10 Discharge Considerations.

21.1.10.1 The water supply for sprinklers only shall be determined either from the density/area requirements of Chapter 20 through Chapter 25 or shall be based upon the room design method in accordance with Section 20.8, at the discretion of the designer.

The room design method is rarely used with storage occupancies because warehouses tend to have very large compartments, which eliminates the benefits associated with that design approach. However, NFPA 13 does permit the room design method to be used in the specific case of a small compartment for storage that exists as part of another occupancy. To use the room design method in such cases, the walls of the compartment must have a fire resistance rating equivalent to the duration demand of the fire protection system. The doors should also have door-closing devices and be of an appropriate rating to ensure that the compartment is not open to adjacent spaces, which would defeat the purpose of compartmentation. For storage occupancies, the duration demand can be quite high, making it even more difficult to use the room design method with storage.

Although 21.1.10.1 mentions only the density/area method and the room design method, the rules in Chapter 20 and Chapter 21 also recognize an alternative to the density/area approach where the number of sprinklers and the pressure necessary at each sprinkler are specified rather than an area and a density. This "pressure/number of sprinklers" approach can be considered a "density/area" approach in the application of this rule because the sprinkler still discharges water at a prescribed pressure, which creates a specific flow given the orifice size of the sprinkler, and the sprinkler still spreads the flow over a protection area, creating a density. Likewise, the protection area is described by a number of sprinklers rather than a specific area, but it still provides the designer with a design area for hydraulic calculations.

21.1.10.2 The calculations shall satisfy any single point on appropriate density/area curves.

The standard does not require every point on the density/area curves to be satisfied. Instead, the designer is permitted to select a single point and make appropriate adjustments. After the adjustments are made, the designer does not need to revisit the curves. Once the designer knows the adjustments that have to be made in advance, specific points on the curves can be selected that contemplate the specific properties associated with the project's water supply. For example, if the designer knows that the building will have unsprinklered combustible concealed spaces that force the design area to a minimum of 3000 ft^2 (280 m^2),

EDUFIRE.IR

then it would make sense to select the density corresponding to 3000 ft² (280 m²) from the curve rather than selecting a higher density corresponding to a lower area and having to use that density once the design area is increased due to the concealed spaces.

CLOSER LOOK [21.1.10.2]

Understanding Density/Area Curves

Beginning with the 2010 edition of NFPA 13, the density/area curves in Chapter 20 and Chapter 21 were truncated at a maximum of 3000 ft² (280 m²) operating area, whereas some of the curves previous to that edition had been as high as 6000 ft² (555 m²). The reduction was a compromise between some members of the committee who favored single point densities for simplicity and other members who preferred the flexibility of the curves. There was widespread agreement among committee members that it was not a good idea to use the upper ends of the curves, where densities were lower and design areas were larger, because they allowed greater fire damage to occur compared with points lower down on the curve that tended to discharge more water out of the first few sprinklers.

The development of K-11.2 (160) and larger sprinklers for fire control has significantly reduced the need for larger design areas (sliding up the curves) to reduce the required density by lowering the pressure necessary to get the greater densities from the first sprinklers that open. For example, if a discharge density of 0.45 gpm/ft² (18.3 mm/min) was necessary to protect a specific storage commodity with the sprinklers spaced at 100 ft² (9. m²) per sprinkler, a flow of 45 gpm (170 L/min) would be needed from each sprinkler. If sprinklers with an orifice size of K-5.6 (80) were used, it would take a pressure of about 65 psi (4.5 bar) to push this flow out of the sprinkler. Going up to a K-8.0 (115) sprinkler would require a pressure of about 32 psi (2.2 bar). Those are very high starting pressures for the most remote sprinkler on a system. Once the friction and elevation losses were accounted for, this water supply might need 60 psi (4.1 bar) or 70 psi (4.8 bar) to supply the sprinkler system.

If the water supply had sufficient flow but insufficient pressure, the only option that a designer had years ago might be to slide up the curve to a higher operating area with a lower density. That would lower the pressure needed at the most remote sprinkler and lower the friction loss in the smaller pipes, thereby lowering the total sprinkler system's pressure demand. But the development of K-11.2 (115) and larger sprinklers allowed the designer to drop the pressure and keep the discharge density the same. To achieve a flow of 45 gpm (170 L/min) from a sprinkler with a K-factor of 11.2 (115), a pressure of only 16 psi (1.1 bar) is required. Larger orifice sprinklers drop the pressure even further.

There are still at least five reasons why a designer might want to use the flexibility offered by the curves:

1. *Taking advantage of the area/density credits by selecting the first design point higher on the curve to receive a credit.* For example, 21.2.2.4 permits a credit in operating area of 33 percent for certain noncombustible bin box/shelving arrangements as long as the area does not go below 2000 ft² (185 m²). If a Class III commodity is being protected with ordinary temperature K-8.0 sprinklers, a design point of 0.222 gpm/ft² (9 mm/min) over 3000 ft² (280 m²) could be selected and then reduced by 33 percent to a density/area criterion of 0.222 gpm/ft² (9 mm/min) over 2000 ft² (185 m²) rather than selecting the point of 0.285 gpm/ft² (11.3 mm/min) over 2000 ft² (185 m²) directly from the curve.
2. *Sliding up the curve to provide more options for orifice sizes required by Section 21.1.* For example, if a commodity required a density of 0.35 gpm/ft² (13.3 mm/min) over a protection area of 2000 ft² (185 m²), 21.1.4 would mandate the use of a K-11.2 (160) or larger orifice sprinkler for this protection. By sliding up the curve to a greater area, the designer can achieve a density lower than 0.34 gpm/ft² (13.9 mm/min) and use a sprinkler with an orifice size of K-8.0 (115) (see 21.1.3).
3. *Obtaining a greater spacing allowance, as specified in Table 10.2.4.2.1(d).* Where a storage commodity can be protected with densities that are close to, but just over, the 0.25 gpm/ft² (9.5 mm/min) limit, a design area of a maximum of 100 ft² (9 m²) would be required. But by sliding up the curve to a lower density, under 0.25 gpm/ft² (9.5 mm/min), an increase in the sprinkler spacing from 100 ft² to 130 ft² (9 m² to 12 m²) would be permitted, and an increase in the maximum spacing would be permitted from 12 ft to 15 ft (3.7 m to 4.6 m).
4. *Mixing of extra hazard occupancies with storage and designing for the "worst case."* Frequently, the owner will have both extra hazard and storage occupancies in a building. Because the minimum design area for extra hazard occupancies is 2500 ft² (230 m²), according to Figure 19.3.3.1.1, and the minimum design area for most storage occupancies is 2000 ft² (185 m²), it can sometimes be difficult to determine what the most demanding area will be and if the storage can be interchanged with the extra hazard. But if the designer slides up the curves for the storage commodity protection to the density for 2500 ft² (230 m²), it will be easier to discern which is the most demanding situation. For example, if a building is going to have mixed use of extra hazard (Group 1) and solid-piled storage of Class IV commodity up to 20 ft (6.1 m) in height (protected with ordinary-temperature sprinklers), it might be difficult to discern which is the most demanding situation. The extra hazard (Group 1) protection needs a minimum density of 0.3 gpm/ft² (12.2 mm/min) over 2500 ft² (230 m²) (see Figure 19.3.3.1.1), whereas the storage needs a minimum density of 0.39 gpm/ft² (15.9 mm/min) over 2000 ft² (185 m²) (see Figure 21.2.2.1). By sliding up the Class IV curve to 2500 ft² (230 m²), the density requirement becomes 0.335 gpm/ft² (13.6 mm/min), which makes it clear that the storage is worse than the extra

(Continues)

EDUFIRE.IR

CLOSER LOOK [21.1.10.2] *(Continued.)*

hazard. If the sprinkler system is designed to protect the storage at 0.335 gpm/ft² (13.6 mm/min) over 2500 ft² (230 m²), the owner will be allowed to move the extra hazard use of the building anywhere without having to redo the sprinkler system. Note that this density would also permit the use of K-8.0 sprinklers in accordance with 21.1.3.

5. *Designing a sprinkler system for a storage occupancy with unsprinklered combustible concealed spaces.* Section 20.7 requires that the sprinkler systems in buildings with certain combustible concealed spaces that do not have fire sprinklers need to be designed for a minimum design area of 3000 ft² (280 m²). Therefore, when selecting a point from the density/area curves for such buildings, it would be prudent to start at the density corresponding to 3000 ft² (280 m²) rather than being forced to go up to 3000 ft² (280 m²) later in the calculations.

21.1.10.3 When using the density/area method, the design area shall meet the requirements of 27.2.4.2.1.

The shape of the design area needs to be based on a reasonable worst-case situation. Without any walls or air currents to push the hot gases from a fire, the sprinklers around a fire would open based on their radius from the fire, so the design area would take on the shape of a square (or something close to a square if spacing was not quite uniform). The hydraulic calculation rules have been written to allow for some worst-case assumptions to be made to account for situations such as walls or air currents pushing the hot gases from a fire to open more sprinklers in one direction than in the other. If the hot gases from a fire open more sprinklers in the direction of the branch line, it is more difficult for the water supply because more water will be required to get down the branch line, which traditionally has smaller pipe.

Where sprinklers with a density/area design are being used, Chapter 27 requires that the design area be skewed in the direction parallel to the branch lines more than in the direction parallel to the mains. Chapter 27 requires a skew of at least 20 percent in the direction of the branch lines by forcing the user to make the dimension of the design area parallel to the branch lines 1.2 times the square root of the design area.

21.1.10.4 The minimum design density shall be not less than 0.15 gpm/ft² (6.1 mm/min) after all adjustments are made.

It is possible that after all the appropriate density adjustments have been made to some 12 ft to 14 ft (3.7 m to 4.3 m) storage height arrangements of Class I and Class II commodities, the density could be lower than 0.15 gpm/ft² (6.1 mm/min), which would be considered too low for storage protection because it would not have acceptable safety factors. In this case, the designer would have to increase such protection to a density of 0.15 gpm/ft² (6.1 mm/min).

21.2* Control Mode Density/Area Sprinkler Protection Criteria for Palletized, Solid-Piled, Bin Box, Shelf, or Back-to-Back Shelf Storage of Class I Through Class IV Commodities.

The phrase *control mode density/area sprinkler* refers to the standard spray sprinkler that has been used extensively for sprinkler protection since 1955 and has a K-factor of 5.6 or larger. The protection criteria for this type of sprinkler are provided in terms of a density (flow divided by the area of coverage of the sprinkler) and an area of sprinkler operation that will be translated into a maximum number of sprinklers that might be expected to open in a fire event. Similar types of spray sprinklers can also be listed as control mode specific application (CMSA) sprinklers (Chapter 22). The text in A.21.2 establishes a logical sequence for the use of the criteria in Section 21.2 and provides one example using a dry pipe sprinkler system with ordinary-temperature K-8.0 sprinklers to protect a nonencapsulated Class III commodity stored at 22 ft (6.7 m) in height.

EDUFIRE.IR

A.21.2 The following procedure should be followed in determining the proper density and area as specified in Chapter 12:

(1) Determine the commodity class
(2) Select the density and area of application
(3) Adjust the required density for storage height
(4) Increase the operating area by 30 percent where a dry pipe system is used
(5) Satisfy the minimum densities and areas *Example:* Storage — greeting cards in boxes in cartons on pallets Height — 22 ft (6.7 m) Clearance to ceiling — 6 ft (1.8 m) Sprinklers — ordinary temperature System type — dry

(a) Classification — Class III
(b) Selection of density/area — 0.225 gpm/ft^2 (9.2 mm/min) over 3000 ft^2 (280 m^2)
(c) Adjustment for height of storage — 1.15 × 0.225 gpm/ft^2 (9.2 mm/min) = 0.259 gpm/ft^2 (10.553 mm/min), rounded up to 0.26 gpm/ft^2 (10.6 mm/min)
(d) Adjustment of area of operation for dry system — 1.3 × 3000 ft^2 (280 m^2) = 3900 ft^2 (360 m^2)
(e) Confirmation that minimum densities and areas have been achieved

The minimum design density for a dry sprinkler system is 0.15 gpm/ft^2 over 2600 ft^2 (6.1 mm/min over 240 m^2) for Class III.

The corresponding minimum density at 3000 ft^2 (280 m^2) is 0.17 gpm/ft^2 (7 mm/min) (satisfied); 1.3 × 3000 ft^2 (280 m^2) = 3900 ft^2 (363 m^2), 0.17 gpm/ft^2 over 3900 ft^2 (7 mm/min over 360 m^2).

The design density and area of application equals 0.26 gpm/ft^2 over 3900 ft^2 (10.6 mm/min over 360 m^2).

21.2.1 Protection for Class I through Class IV commodities in the following configurations shall be provided in accordance with this section:

(1) Nonencapsulated commodities that are solid-piled, palletized, or bin box storage up to 30 ft (9.1 m) in height
(2) Nonencapsulated commodities on shelf storage up to 15 ft (4.6 m) in height
(3)* Encapsulated commodities that are solid-piled, palletized, bin box, or shelf storage up to 15 ft (4.6 m) in height

A.21.2.1(3) Full-scale tests show no appreciable difference in the number of sprinklers that open for either nonencapsulated or encapsulated products up to 15 ft (4.6 m) high. Test data are not available for encapsulated products stored higher than 15 ft (4.6 m). However, in rack storage tests involving encapsulated storage 20 ft (6.1 m) high, increased protection was needed over that for nonencapsulated storage.

The protection specified contemplates a maximum of 10 ft (3.0 m) clearances from top of storage to sprinkler deflectors for storage heights of 15 ft (4.6 m) and higher.

(4) Back-to-back shelf storage up to 15 ft (4.6 m) in height
(5) Encapsulated storage of solid-piled and palletized Class I through IV commodities permitted in accordance with 21.2.3 for storage heights over 15 ft (4.6 m) up to and including 20 ft (6.1 m)

The five types of storage discussed in 21.2.1 are the limits of protection for spray sprinklers using density/area criteria. For a type of storage that is beyond the limits of the type of storage permitted by this list, such as palletized storage of encapsulated materials up to 25 ft (7.6 m) in height, the user cannot use spray sprinklers with density/area criteria but might be able to use other types of sprinklers or discharge criteria discussed in Chapter 22 through Chapter 24.

Encapsulated storage is much more difficult to protect than nonencapsulated storage because of the covering of plastic over the top of the storage array. One of the mechanisms that density/area sprinklers

EDUFIRE.IR

use to help control a fire is the pre-wetting of adjacent combustibles ahead of the advancing flame in front of the growing fire, thereby limiting the extent of fire spread. But with encapsulation over the top of the storage array, water is shed and is not absorbed into the commodities adjacent to the fire, preventing the commodity from getting wet. This arrangement makes it easier for the fire to spread to those commodities. For some encapsulated storage arrangements, the density can be increased to help deal with water shedding. But for other arrangements, it is just too difficult to protect encapsulated storage, even with a higher density. For that reason, the height of encapsulated commodities is limited.

Section 21.2.4 contains additional criteria for a special shelf storage arrangement over 12 ft (3.7 m) in height with walkways in the shelving units. However, even with this protection and extra sprinklers below the walkways, the total storage height is limited to 15 ft (4.6 m).

SEE ALSO

Section 21.9 for more specific criteria for protection of certain retail storage/display configurations that exceed the limits of the back-to-back shelving configuration.

Item (4) of 21.2.1 discusses back-to-back shelf storage, which is defined in 3.3.12. Back-to-back shelf storage is similar to two shelving units pushed together, but it is critical that they be separated by a longitudinal vertical barrier such as plywood, particleboard, sheet metal, or some equivalent material. The purpose of the barrier is to push the fire toward the aisle rather than allow the fire to extend across the depth of the array into the next shelving unit. Fire tests have shown that the perforations in the barrier still sufficiently pushed the fire toward the aisle.

21.2.2 Protection Criteria for Palletized, Solid-Piled, Bin Box, Shelf, or Back-to-Back Shelf Storage of Class I Through Class IV Commodities Stored Over 12 ft (3.7 m) in Height.

21.2.2.1 Where using ordinary temperature–rated sprinklers, a single point shall be selected from the appropriate commodity curve on Figure 21.2.2.1.

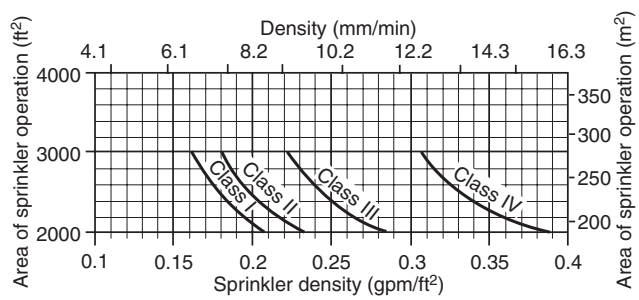

FIGURE 21.2.2.1 *Sprinkler System Design Curves for 20 ft (6.1 m) High Storage — Ordinary Temperature–Rated Sprinklers.*

Figure 21.2.2.1 shows the density/area curves for a Class I through Class IV commodity that is stored 20 ft (6.1 m) in height. For storage that is not exactly 20 ft (6.1 m), the density taken from Figure 21.2.2.1 should be multiplied by the modifier shown in Figure 21.2.2.3. For more information on required modifications to the density, see the commentary following 21.2.2.3.

ASK THE AHJ

Can the authority having jurisdiction give a final sign-off for the project if, upon final inspection, the owner/tenant is using shelf storage but the design submitted was not for shelf storage?

Not necessarily. NFPA 13 addresses multiple types of storage, and not every sprinkler system design can handle all the scenarios addressed in the standard. For example, it is not uncommon for owner/tenants to decide to place single shelving units back-to-back without providing a sufficient vertical divider between the shelving units. That modification to the storage arrangement changes the storage protection scheme required by NFPA 13. If shelving units were placed back-to-back with no vertical divider, the fire sprinkler system design would be invalidated by the change in shelving arrangement. The design criteria for rack storage would need to be used, since the new arrangement does not fit within the definition of *shelf storage* in 3.3.188.

SEE ALSO

The commentary for the "Owner's Certificate" requirement of Section 4.2.

EDUFIRE.IR

The density/area curves of Figure 21.2.2.1 were developed from full-scale fire tests and experience with ordinary-temperature sprinklers having K-factors of 5.6 and 8.0 more than 30 years ago. Since that time, additional full-scale tests have been performed to show that ordinary-temperature sprinklers with larger K-factors (11.2 and higher) perform better than indicated in the density/area curves shown in Figure 21.2.2.1 and thus should not be limited to those curves. Therefore, 21.1.9 permits ordinary-temperature sprinklers with K-factors of 11.2 or greater to use the density/area criteria in Figure 21.2.2.2 instead of Figure 21.2.2.1.

When intermediate-temperature sprinklers are to be used, the same discharge criteria should be followed as for ordinary-temperature sprinklers. That means that if an intermediate-temperature sprinkler with a K-factor of 5.6 or 8.0 is used, the density/area criteria of Figure 21.2.2.1 should be used. If an intermediate-temperature sprinkler with a K-factor of 11.2 or greater is used, the density/area criteria of Figure 21.2.2.2 should be used.

The requirements in 21.1.2 through 21.1.4 limit the orifice size of the sprinkler permitted to be used based on the final density after modifications are applied. K-5.6 sprinklers can be used only if the final density is 0.20 gpm/ft^2 (8.2 mm/min) or less. K-8.0 sprinklers can be used only if the final density is 0.34 gpm/ft^2 (13.9 mm/min) or less. If the density is greater than 0.34 gpm/ft^2 (13.9 mm/min), then a sprinkler with a K-factor of 11.2 or greater needs to be used. These rules, together with the requirements in 21.1.9, limit the practical application of Figure 21.2.2.1 to lower storage heights and lower commodity classifications. If the user needs to protect higher storage heights of higher commodity classification, a point can be selected on the curve above 2000 ft^2 (185m^2) so that after modification the density is below 0.34 gpm/ft^2 (13.9 mm/min).

For example, if a building is being designed with K-8.0 ordinary-temperature sprinklers to store 25 ft (7.6 m) high Class III commodities, the user could select a point of 0.25 gpm/ft^2 over 2400 ft^2 (10.2 mm/min over 223 m^2) from the Class III curve on Figure 21.2.2.1. After the 1.35 modifier required by Figure 21.2.2.3 for 25 ft (7.6 m) high storage, the final density would be 0.337 gpm/ft^2 (13.8 mm/min) [0.25 × 1.35 = 0.337 gpm/ft^2 (10.2 × 1.35 = 13.8 mm/min)], which is within the limit of 0.34 gpm/ft^2 (13.9 mm/min). In this case, K-8.0 sprinklers would be allowed.

ASK THE AHJ

Often the hydraulic calculations submitted to the authority having jurisdiction using the curves in Figure 19.3.3.1.1, Figure 21.2.2.1, Figure 21.2.2.2, and Figure 21.4.1.2(a) through Figure 21.4.1.2(e) are based on a minimum design density specified to a tolerance of ±0.001. Is this permitted?

Each of the curves in each of those figures spans between the hundredth (0.01) grid lines with the density varying with an infinite degree of available accuracy values with movement along the curve. However, the degree of accuracy that can be read from the curves is limited by the overall scale of the figure and the provided hundredth grid lines in the figure. For measurements using a scale, the uncertainty of a measurement is half the smallest division of that scale. Therefore, for a reasonable degree of accuracy, it is suggested that the density be read to the nearest greater 0.005 gpm/ft^2 (0.2 mm/min). It is important to note that this would apply to the reading of the figure and that modifications to the required density due to other adjustments, such as additional in-rack sprinklers, height adjustments, or encapsulation, can result in more precise calculated densities but should be rounded to the nearest 0.001 gpm/ft^2 (0.04 mm/min).

21.2.2.2 Where using high temperature–rated sprinklers, a single point shall be selected from the appropriate commodity curve on Figure 21.2.2.2.

Since Figure 21.2.2.2 was created, additional fire tests have been conducted with ordinary-temperature K-11.2 and larger sprinklers that show that those larger orifice sprinklers can control or suppress fires as well as or better than the K-5.6 or K-8.0 high-temperature sprinklers for which the curves were originally designed. Because the ordinary-temperature sprinklers are just as good as or better than the high-temperature sprinklers for which the curves were designed, the committee decided to allow the use of the

EDUFIRE.IR

favorable discharge criteria (see Figure 21.2.2.2) with the ordinary-temperature sprinklers having a K-factor of 11.2 or larger. So, even though the figure pertains to high temperature–rated sprinklers, the figure is allowed to be used with ordinary- and intermediate-temperature sprinklers that have a K-factor of 11.2 or larger. See 21.1.9 and its commentary for more detail.

Figure 21.2.2.2 shows the density/area curves for Class I through Class IV commodities stored 20 ft (6.1 m) in height. For storage that is not exactly 20 ft (6.1 m), the density taken from Figure 21.2.2.2 should be multiplied by the modifier shown in Figure 21.2.2.3. For more information on required modifications to the density, see the commentary to 21.2.2.3.

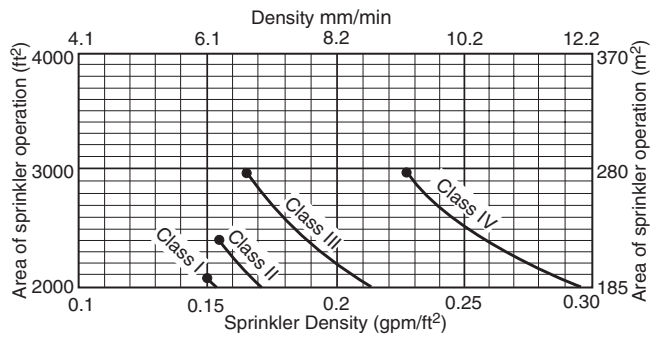

FIGURE 21.2.2.2 *Sprinkler System Design Curves for 20 ft (6.1 m) High Storage — High Temperature–Rated Sprinklers.*

21.2.2.3 The densities selected in accordance with 21.2.2.1 or 21.2.2.2 shall be modified in accordance with Figure 21.2.2.3 without revising the design area.

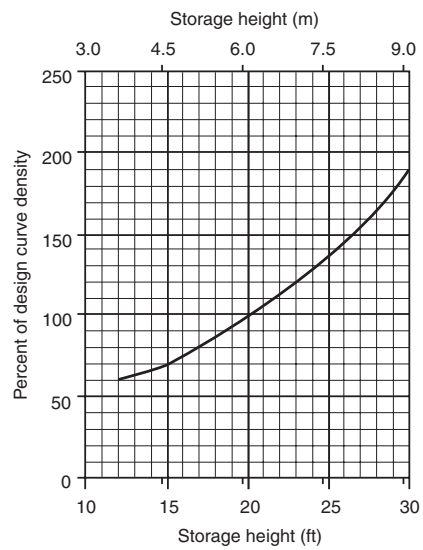

FIGURE 21.2.2.3 *Ceiling Sprinkler Density vs. Storage Height.*

The densities shown in Figure 21.2.2.1 and Figure 21.2.2.2 will provide fire control or suppression for 20 ft (6.1 m) high storage. Storage arrays that are less than 20 ft (6.1 m) high will require less discharge from the sprinklers to control or suppress, while storage arrays that are more than 20 ft (6.1 m high) will require more discharge. This general statement assumes that the clearance from the top of the storage

EDUFIRE.IR

DESIGNER'S CORNER [21.2.2.3]

Can ordinary-temperature sprinklers with K-factors of 11.2 or larger that are specifically listed for storage use the better density/area curves of Figure 21.2.2.2?

Even though 21.2.2.2 and Figure 21.2.2.2 reference the use of high-temperature sprinklers to use the better density/area curves, ordinary-temperature sprinklers are permitted to use these curves in accordance with 21.1.9.

The first exhibit shows — in a simplified manner — how high-temperature sprinklers limit the number of sprinklers that open during a fire. It might take multiple rings of sprinklers to achieve the results shown here by a single ring. The hot gases coming off a storage fire can exceed 1000˚F (538°C). When the first sprinklers open from the fire, the water spray from the sprinklers cools the hot gases from the fire. If the sprinklers are K-5.6 or K-8.0, the gases might be cooled to temperatures between 160˚F (71°C) and 280˚F (138°C). If that is the case, the gases will be hot enough to open the next ring of sprinklers.

If the sprinklers are K-11.2 or larger, however, fire tests show that these sprinklers do a better job of controlling the fire. The hot gases that pass through the sprinkler spray are cooled below 160˚F (71°C), which prevents the next ring of sprinklers from opening, as shown in the second exhibit.

Because ordinary-temperature K-11.2 sprinklers perform better than high-temperature K-5.6 or K-8.0 sprinklers, ordinary-temperature K-11.2 sprinklers or higher are allowed to use the high-temperature rules in NFPA 13 such as 21.2.2.2.

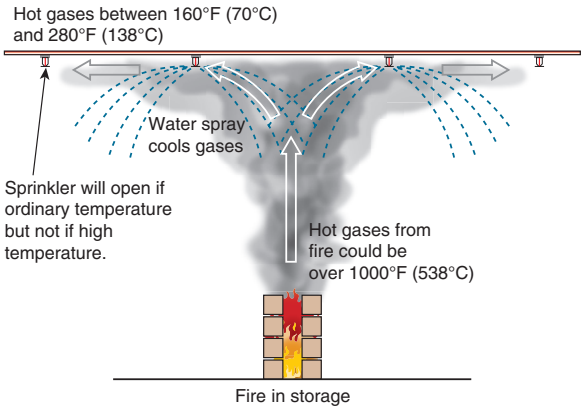

K-5.6 and K-8.0 Sprinklers and Storage.

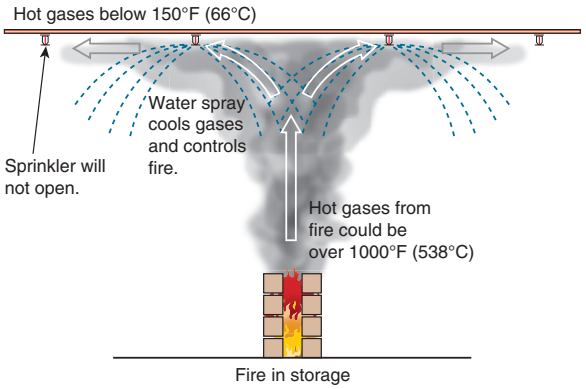

K-11.2 and Larger Orifice Sprinklers and Storage.

to the ceiling is not excessive. If excessive clearance exists [>20 ft (6.1 m) per 20.6.4.3], it might be necessary to increase the discharge from the sprinklers to compensate for the clearance, even with regard to short storage arrays.

For example, the storage of 15 ft (4.6 m) of Class II commodity in a building with a roof deck height of 45 ft (14 m) would have a clearance of 30 ft (9.1 m), which exceeds the limits of 20.6.4.3 and requires the use of an assumed storage height that would result in a clearance of 20 ft (6.1 m) for determination of the required design criteria. For the roof deck height of 45 ft (14 m), that would result in an assumed storage height of 25 ft (7.6 m), which would require an increase in the base density from Figure 21.2.2.1 and Figure 21.2.2.2 using Figure 21.2.2.3. See 20.6.4.2 through 20.6.4.5 and the associated commentary for more information about excessive clearance.

The density is adjusted using the value from Figure 21.2.2.3 without changing the design area. For example, Figure 21.2.2.3 allows a 70 percent adjustment to storage of any commodity that is 15 ft (4.6 m) high. If a wet pipe sprinkler system is designed to protect a 15 ft (4.6 m) high Class IV commodity with K-8.0 high-temperature sprinklers, a point should be selected on the Class IV curve in Figure 21.2.2.2 of 0.295 gpm/ft^2 over 2000 ft^2 (12 mm/min over 185 m^2). The density should then be multiplied by 0.7 (an adjustment of 70 percent) so that the final discharge criteria is 0.207 gpm/ft^2 over 2000 ft^2 (8.4 mm/min over 185 m^2).

EDUFIRE.IR

21.2.2.4 In the case of metal bin boxes with face areas not exceeding 16 ft^2 (1.5 m^2) and metal closed shelves with face areas not exceeding 16 ft^2 (1.5 m^2), the area of application shall be permitted to be reduced by 33 percent, provided the minimum requirements of 21.2.2.5 and 21.2.2.6 are met.

In situations where bin box and closed shelf storage are made of metal, a fire occurring in the shelving structure typically would not grow as rapidly or open as many sprinklers as a fire starting in a structure made of wood or cardboard. Note that for 21.2.2.4 to apply, the face area must be limited and the shelves for shelving units need to be closed — that is, the face must be covered with a metal door or cover. The use of metal doors or covers is not required for metal bin box storage. The face area should be measured as shown in Exhibit 21.1. The limit on the size of the face and the cover over the opening of the shelves helps to prevent oxygen from getting to the fire, which helps limit the size and heat release of the fire.

Additionally, the compartmentation of the bin box volume, having a limited face area, limits the degree of unrestricted spread of fire within the storage unit. Exhibit 21.1 shows a portion of the section view of bin box or shelf units from the aisle looking toward the bins or shelves and the measurement of the face area. The face area is the physical opening created by one bin or shelf between vertical supports, not the center-to-center dimensions or the area of the entire face on the aisle.

EXHIBIT 21.1 Diagram Illustrating Face Area Dimensions.

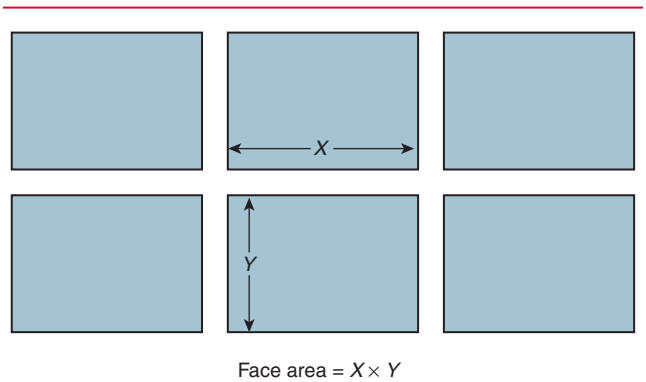

If metal vertical barriers are provided within what would otherwise be a metal shelf array to form five-sided boxes with little to no vertical or horizontal space communication between compartments, this would qualify as bin box storage as defined by 3.3.18. The reduction provided by 21.2.2.4 — provided the face areas of the compartments are not greater than 16 ft^2 (1.5 m^2) — would be allowed.

When this rule is used, the design area is not allowed to drop below 2000 ft^2 (185 m^2) for wet pipe systems or below 2600 ft^2 (240 m^2) for dry pipe systems. Therefore, it would not be efficient to select a point near the bottom of the density/area curves. Selecting a point at the top of the curve corresponding to 3000 ft^2 (280 m^2) and then reducing the design area to 2000 ft^2 (185 m^2) would make more sense. For example, a Class IV commodity stored in metal bin boxes with face areas of 15 ft^2 (1.4 m^2) that is being protected with a dry pipe sprinkler system having ordinary-temperature K-8.0 sprinklers could start with a density/area of 0.309 gpm/ft^2 over 3000 ft^2 (12.6 mm/min over 280 m^2) from the Class IV curve on Figure 21.2.2.1. The design area can then be decreased by 33 percent to 0.309 gpm/ft^2 over 2000 ft^2 (12.6 mm/min over 185 m^2). However, the design area would need to be increased by 30 percent for the dry pipe system (see 20.13.3), so the final discharge criteria would be 0.309 gpm/ft^2 over 2600 ft^2 (12.6 mm/min over 240 m^2). Note that since the final density is less than 0.34, 21.1.3 permits the use of the K-8.0 sprinkler.

21.2.2.5 For storage greater than 12 ft (3.7 m), the design density shall not be less than 0.15 gpm/ft^2 (6.1 mm/min), and the design area shall not be less than 2000 ft^2 (185 m^2) for wet systems or 2600 ft^2 (240 m^2) for dry systems for any commodity, class, or group.

The criteria in 21.2.2.5 and 21.2.2.6 were developed separately over different concerns. The requirement in 21.2.2.5 addresses the concern that the water supply for any storage occupancy must be sufficient to

EDUFIRE.IR

overcome the vertical fire plume that develops with any vertical array of combustibles. If a density less than 0.15 gpm/ft² (6.1 mm/min) is applied to any vertical array, there is a chance that fire control will not be established. Therefore, the minimum discharge criteria of a density of at least 0.15 gpm/ft² (6.1 mm/min) must be applied to all storage commodities, regardless of the classification. In practical application, this rule typically comes into play only for Class I and Class II commodities, but it is maintained in the standard as a general rule to make it easier to understand and enforce. A discharge density is never permitted to be below 0.15 gpm/ft² (6.1 mm/min) for protection of a storage occupancy.

Separately, 21.2.2.5 is intended to ensure that the design area does not get too small. Some requirements, such as 21.2.2.4, permit reductions in the design area, but there is a concern that in a large open space, such as a warehouse, heat might spread out and open additional sprinklers. In keeping with the traditional safety factors in the design of sprinkler systems, a minimum area of 2000 ft² (185 m²) is set for wet pipe systems and 2600 ft² (240 m²) for dry pipe systems. The requirements in 20.13.1 state that when multiple adjustments are made, they must compound. Therefore, the multiple adjustment of the 33 percent decrease allowed by 21.2.2.4 and the 30 percent increase required by 20.13.3 compound to make a final design area of 2600 ft² (240 m²), where an initial point of 3000 ft² (280 m²) is selected on the curves and both adjustments of 21.2.2.4 and 20.13.3 apply.

For the minimum criteria in 21.2.2.6, different concerns apply. See the commentary following 21.2.2.6 for more information. For protection of a Class III or Class IV commodity, the rules of both 21.2.2.5 and 21.2.2.6 need to apply. The user is not permitted to consider a density above 0.15 gpm/ft² (6.1 mm/min) in accordance with 21.2.2.5 and ignore the requirements of 21.2.2.6 when protecting a Class III or Class IV commodity.

21.2.2.6 For storage greater than 12 ft (3.7 m), the sprinkler design density for any given area of operation for a Class III or Class IV commodity, calculated in accordance with 21.2.2, shall not be less than the density for the corresponding area of operation for ordinary hazard Group 2.

See the commentary following 21.2.2.5 for how the minimum criteria in 21.2.2.6 must be followed even if the criteria of 21.2.2.5 are met. The requirements satisfy different concerns, and both are important to NFPA 13. The concern in 21.2.2.6 is that Figure 21.2.2.3 allows some significant reductions in discharge density for storage heights below 20 ft (6.1 m). When protecting Class III and Class IV commodities, the density should never get below what would be required for an ordinary hazard (Group 2) (OH2) occupancy. Therefore, for the design of a sprinkler system to protect Class III and Class IV commodities, the final density must be compared with what would be allowed by Figure 19.3.3.1.1 for OH2 at the corresponding area.

For example, consider a wet pipe sprinkler system designed to protect 18 ft (5.5 m) high storage of Class III commodities using high-temperature K-8.0 sprinklers. Figure 21.2.2.2 allows the user to select a point of 0.212 gpm/ft² over 2000 ft² (8.7 mm/min over 185 m²), and Figure 21.2.2.3 then allows the user to adjust the density by 80 percent, yielding a potential design discharge of 0.17 gpm/ft² over 2000 ft² (7.0 mm/min over 185 m²). Even though this discharge density is above the minimum of 0.15 gpm/ft² (6.1 mm/min), as required by 21.2.2.5, it still needs to be compared to OH2 as required by 21.2.2.6. Looking at the OH2 curve in Figure 19.3.3.1.1, the density at 2000 ft² (185 m²) is 0.19 gpm/ft² (7.7 mm/min). Therefore, a storage occupancy protecting a Class III or Class IV commodity should not have a density lower than 0.19 gpm/ft² (7.7 mm/min) where the design area is 2000 ft² (185 m²). So, for the example, even though the math yielded a potential discharge density of 0.17 gpm/ft² (7.0 mm/min), the final discharge density would need to be increased to 0.19 gpm/ft² over 2000 ft² (7.7 mm/min over 185 m²).

For dry pipe systems, the comparison with Figure 19.3.3.1.1 needs to take into account that the values from Figure 19.3.3.1.1 would be increased by 30 percent for a dry pipe system as well. That means that if the preceding example for 18 ft (5.5 m) high storage of Class III commodities were to be protected with a dry pipe system, the comparison would still be back to Figure 19.3.3.1.1 and the point of 0.19 gpm/ft² over 2000 ft² (7.7 mm/min over 185 m²) from the OH2 curve, not to the point of 0.178 gpm/ft² (7.2 mm/min) over 2600 ft² (240 m²) from the OH2 curve. That is because the point of 0.19 gpm/ft² over 2000 ft² (7.7 mm/min over 185 m²) from the OH2 curve will be increased by 30 percent to 2600 ft² (240 m²) because the system is dry. Therefore, that is the point where the comparison needs to be made for a dry pipe system meeting the requirements of Chapter 8.

EDUFIRE.IR

21.2.2.7 For back-to-back shelf storage, the design density shall be taken from Figure 21.2.2.1 for storage greater than 12 ft (3.7 m) and up to 15 ft (4.6 m) with no reduction for design density referenced in Figure 21.2.2.3.

The back-to-back shelf storage rules were developed from a series of full-scale fire tests using the criteria in Figure 21.2.2.1, regardless of the temperature rating or orifice size of the sprinkler. For the protection of this specific storage situation, NFPA 13 does not permit the use of Figure 21.2.2.2 for high-temperature sprinklers and does not allow the use of Figure 21.2.2.2 for sprinklers with orifice sizes of K-11.2 or larger.

Both high-temperature sprinklers and ordinary-temperature sprinklers of any orifice size are permitted to protect back-to-back storage in accordance with 21.2.1(4) and 21.2.2.7, but they must use the protection criteria from Figure 21.2.2.1. In addition, they are not permitted to take the discharge density reductions from Figure 21.2.2.3 for lower storage heights.

21.2.3 Encapsulated Storage Over 15 ft (4.6 m) in Height Up to and Including 20 ft (6.1 m) in Height.

The requirements in 21.2.3 are based on an analysis of rack storage protection without in-rack sprinklers. Because rack structures are inherently more stable than solid-piled and palletized storage, the sprinkler protection criteria for rack storage — where protected from the ceiling only, with no in-rack sprinklers — should be sufficient for the less stringent configuration of solid-piled and palletized storage. Note that 21.2.3.1 limits the use of these new criteria to solid-piled and palletized storage. The requirements in 21.2.3 do not apply to encapsulated commodities in bin box, shelf, and back-to-back shelf storage.

21.2.3.1 Encapsulated storage over 15 ft (4.6 m) in height up to and including 20 ft (6.1 m) in height shall be limited to solid-piled and palletized storage.

21.2.3.2 Encapsulated storage over 15 ft (4.6 m) in height up to and including 20 ft (6.1 m) in height shall be protected by sprinklers with a K-factor of 11.2 (160) or larger.

21.2.3.3 Encapsulated storage over 15 ft (4.6 m) in height up to and including 20 ft (6.1 m) in height of Class I commodity shall be protected with a density/area of at least 0.46 gpm/ft^2 over 2000 ft^2 (18.7 mm/min over 185 m^2).

21.2.3.4 Encapsulated storage over 15 ft (4.6 m) in height up to and including 20 ft (6.1 m) in height of Class II commodity shall be protected with a density/area of at least 0.53 gpm/ft^2 over 2000 ft^2 (21.6 mm/min over 185 m^2).

21.2.3.5 Encapsulated storage over 15 ft (4.6 m) in height up to and including 20 ft (6.1 m) in height of Class III and Class IV commodity shall be protected with a density/area of at least 0.6 gpm/ft^2 over 2000 ft^2 (24.5 mm/min over 185 m^2).

21.2.4 Special Design for Palletized, Solid-Piled, Bin Box, or Shelf Storage of Class I Through Class IV Commodities. 21.2.4.1 Bin Box and Shelf Storage.

21.2.4.1.1 Bin box and shelf storage that is over 12 ft (3.7 m) but not in excess of the height limits of 21.2.1 and that is provided with walkways at vertical intervals of not over 12 ft (3.7 m) shall be protected with automatic sprinklers under the walkway(s).

The requirement in 21.4.1.1 was written to address specific designs of tall bin box and shelf arrays with catwalks that allow access to upper levels of bins and shelves that normally would not be accessible from the floor. The catwalks form obstructions to the ceiling sprinklers and make fire control in these arrangements more challenging. This requirement allows the bin box or shelf array to have catwalks but places two restrictions on the array.

First, the array is not allowed to be any taller than the maximum storage heights permitted in 21.2.1. Bin box storage of nonencapsulated commodities is allowed up to 30 ft (9.1 m) in height, and bin box storage of encapsulated commodities is limited to 15 ft (4.6 m) in height. Shelf storage is always limited to 15 ft (4.6 m) in height regardless of whether the product on the shelves is encapsulated or not.

EDUFIRE.IR

Second, sprinklers need to be installed below the walkways, even if the walkways are of an open grate type. Experience with fires in storage warehouses with walkways has shown that, even with open grate walkways, burning materials sometimes collapse and fall on the walkway, blocking the sprinkler discharge. The sprinklers under the walkway need to be capable of discharging 15 psi (1 bar) from the most demanding six sprinklers, but this value is not required to be added to the ceiling sprinkler demand.

Sprinklers under open grate walkways should have water shields to protect them from sprinkler discharge from above. Listed in-rack sprinklers have a built-in water shield and could be used to meet this requirement under walkways. Sprinklers under open grate walkways might experience a delay in operation due to the lack of heat banking down around them early in the fire. Covering the entire walkway with plywood or metal eliminates the potential for this delay and is a better alternative for protecting the under-walkway sprinkler from ceiling sprinkler discharge.

21.2.4.1.2 Protection shall be as follows:

(1) Ceiling design density shall be based on the total height of storage within the building.
(2) Automatic sprinklers under walkways shall be designed to maintain a minimum discharge pressure of 15 psi (1.0 bar) for the most hydraulically demanding six sprinklers on each level. Walkway sprinkler demand shall not be required to be added to the ceiling sprinkler demand. Sprinklers under walkways shall not be spaced more than 8 ft (2.4 m) apart horizontally.

21.3 Control Mode Density/Area Sprinkler Protection Criteria for Palletized, Solid-Piled, Bin Box, Shelf, or Back-to-Back Shelf Storage of Plastic and Rubber Commodities.

The phrase *control mode density/area sprinkler* refers to the standard spray sprinkler that has been used extensively for sprinkler protection since 1955 and has a K-factor of 5.6 or larger. The protection criteria for this sprinkler are provided in terms of a density (flow divided by the area of coverage of the sprinkler) and an area of sprinkler operation that will be translated into a number of sprinklers that might open if there is a fire.

21.3.1 Protection for plastic and rubber commodities shall be in accordance with Section 21.3. The decision tree shown in Figure 21.3.1 shall be used to determine the protection in each specific situation, subject to the following limitations:

(1) Commodities that are stored palletized, solid piled, or in bin boxes up to 25 ft (7.6 m) in height.
(2) Commodities that are stored in shelf storage up to 15 ft (4.6 m) in height.
(3) Commodities that are stored using back-to-back shelf storage up to 15 ft (4.6 m) in height. The minimum aisle width shall be 5 ft (1.5 m). The design criteria shall be in accordance with Table 21.3.1. The back-to-back shelf shall have a full height solid vertical transverse barrier of ⅜ in. (10 mm) plywood or particleboard, .78 mm sheet metal, or equivalent, from face of aisle to face of aisle, spaced at a maximum 45 ft (14 m) interval. The transverse barrier shall be permitted to terminate at the longitudinal barrier.

The three types of storage discussed in 21.3.1 are the limits of protection for spray sprinklers using density/area criteria. If the storage is a type that is beyond the limits of the type of storage permitted by this list, such as palletized storage of cartoned nonexpanded Group A plastic materials greater than 25 ft (7.6 m) in height, the user cannot use spray sprinklers with density/area criteria. However, the user might be able to use other types of sprinklers or discharge criteria discussed in Chapter 22 or Chapter 23.

Note that the height limitation in 21.3.1(1) of 25 ft (7.6 m) is based on the fact that 25 ft (7.6 m) was the maximum height tested with control mode density/area sprinklers for palletized, solid-piled, and bin box storage.

EDUFIRE.IR

The test data on shelf storage in 21.3.1(2) is limited and was conducted at a storage height of 15 ft (4.6 m). Limiting the protection of shelf storage to 15 ft (4.6 m) in height has been acceptable to the users of NFPA 13, because shelf storage is rarely higher than 15 ft (4.6 m).

Item (3) of 21.3.1 discusses back-to-back shelf storage, which is defined in 3.3.12. Back-to-back shelf storage is similar to two shelving units pushed together, but it is critical that they be separated by a longitudinal vertical barrier such as plywood, particleboard, sheet metal, or some equivalent material. The purpose of the barrier is to push the fire toward the aisle rather than allow the fire to extend across the depth of the array into the next shelving unit. Fire tests have shown that the perforations in the barrier still sufficiently pushed the fire toward the aisle. It should be noted that the testing and protection criteria in Table 21.3.1 are limited to cartoned nonexpanded Group A plastics and that the two additional constraints listed in 21.3.1(3) must be followed: a minimum aisle width of 60 in. (1.5 m) and the installation of a solid vertical barrier across the depth of the shelving unit to form a break at intervals not exceeding 45 ft (13.7 m) in length. Where the length of the proposed shelving unit does not exceed 45 ft (13.7 m), no such vertical barrier is required.

SEE ALSO

Section 21.9 for more specific criteria for protection of certain retail storage/display configurations that exceed the limits of the back-to-back shelving configuration.

TABLE 21.3.1 *Back-to-Back Shelf Storage of Cartoned Nonexpanded Group A Plastics*

Storage Height		*Ceiling Height*		*Protection*
ft	*m*	*ft*	*m*	
Over 5 up to 8	1.5/2.4	Up to 14	4.3	Ordinary Hazard Group 2
Up to 12	3.7	Up to 15	4.6	0.45 gpm/ft^2 over 2500 ft^2 18.3 mm/min/230 m^2
Up to 12	3.7	Up to 30	9.1	0.6 gpm/ft^2 over 2500 ft^2 24.5 mm/min/230 m^2
Up to 15	4.6	Up to 30	9.1	0.7 gpm/ft^2 over 2500 ft^2 28.5 mm/min/230 m^2

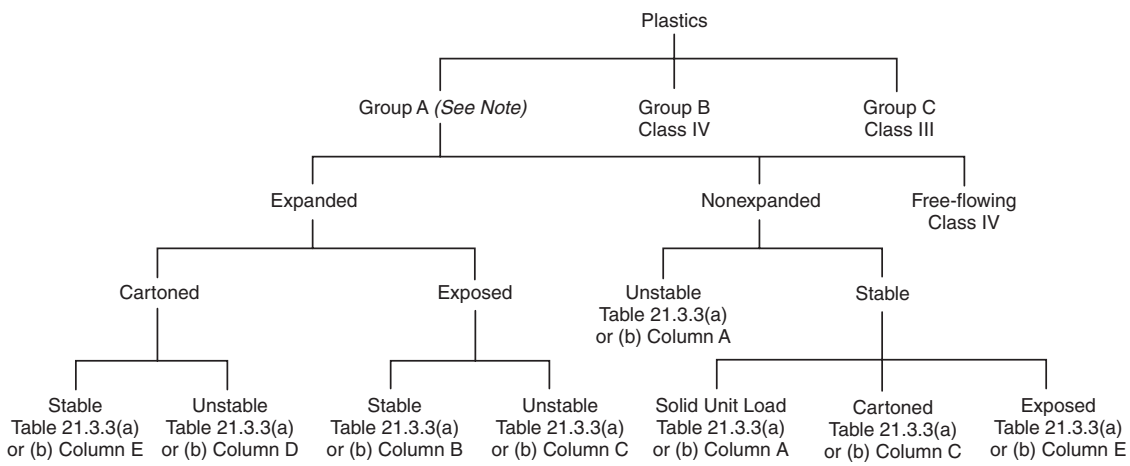

Note: Cartons that contain Group A plastic material are permitted to be treated as Class IV commodities under either of the following conditions:

(1) There are multiple layers of corrugation or equivalent outer material that would significantly delay fire involvement of the Group A plastic.

(2) The amount and arrangement of Group A plastic material within a carton with a single layer of corrugation would not be expected to significantly increase the fire hazard.

FIGURE 21.3.1 *Decision Tree.*

EDUFIRE.IR

CLOSER LOOK [21.3.1]

Using Figure 21.3.1

The decision tree shown in Figure 21.3.1 guides the user in determining the protection criteria for different storage situations by asking a series of questions regarding the storage array. The use of this decision tree is applicable to palletized, solid-piled, bin box, and shelf storage but does not apply to back-to back shelf storage, which is covered specifically by Table 21.3.1. The first question that the user must answer is whether the product is a Group A, Group B, or Group C plastic. Figure 21.3.1 reminds the user of the directive in Chapter 4 that Group B plastics are to be treated as Class IV commodities and that Group C plastics are to be treated as Class III commodities.

The next level in the decision tree requires that Group A plastics be identified as either expanded, nonexpanded, or free flowing. Expanded plastics have a cellular structure containing pockets of air. Because of the surface-to-air ratio inherent with expanded plastics, they burn much more rapidly than nonexpanded plastics. To determine the proper discharge criteria for the sprinklers protecting Group A plastics, the determination needs to be made as to whether the plastics will be considered expanded or nonexpanded. The amount of expanded plastic must be assessed to make such a determination. As provided by 20.4.5.3 and 20.4.5.4, the quantity of expanded plastic within the unit load must exceed 25 percent by volume for cartoned commodities and 15 percent by volume for exposed (uncartoned) commodities to be considered an expanded Group A plastic.

Free-flowing plastics are those small objects that fill a box or a subdivision within the box without restraint. The theory is that during a fire, the objects will freely fall out of the box and either smother the fire or fall away from it, removing themselves as fuel. Since the burning rate is reduced and fuel load has been lessened, free-flowing plastics are permitted to be treated as a Class IV commodity. However, it is important that the product be a true free-flowing plastic to qualify for the reduction in minimum discharge criteria. Some authorities have developed a test to see if the product can be considered free flowing — a 2 in. × 2 in. × 2 in. (50 mm × 50 mm × 50 mm) hole is cut in the corner of the bottom of the container to see if the product will flow freely from the box.

Next, the user must determine whether the commodity will be stored exposed or in cartons. In general, water from sprinklers and hose streams will have less effect on burning exposed plastic commodities than on burning plastic commodities in cartons. Cartons absorb water, which pre-wets the commodities around the fire, thus slowing or stopping the progress of the fire. Exposed plastics do not absorb water but instead allow the sprinkler discharge to flow over the plastics, virtually eliminating any benefit of pre-wetting. As a result, greater sprinkler discharge is required to protect exposed plastic.

The user must then determine pile stability to help calculate the required sprinkler discharge density. An unstable pile will fall over early in the fire and either smother the fire or make it more difficult for burning to occur by reducing the surface area exposed to oxygen available for burning. In addition, unstable piles tend to collapse toward a fire, which has the effect of funneling water that lands on top of the pile toward the fire, assisting in fire control. Determining whether a pile is stable or not is an extremely difficult and subjective decision. An extremely flimsy pile with no restraint for the storage on the pallet loads might easily be considered unstable, whereas multiple layer cardboard boxes strapped together and to the pallet with thick steel bands might easily be seen as stable. Most commodities fall somewhere between those two extremes. Because the stable pile is the more conservative decision, it is best to make that assumption unless the user is sure that the pile can be considered unstable.

The final decision to be made using the decision tree applies only to nonexpanded plastics in stable piles. The user must determine if the commodity is exposed, in cartons, or a "solid unit load." A solid unit load is a single object that is completely plastic with no hollow center or open spaces of air. A fire on the outside of a solid unit load burns only along the surface. Because there is a limit to the surface area of the fuel in contact with oxygen to promote combustion, the fire has a difficult time burning into the commodity. Solid unit loads are rare, and these rules should be used only where a true solid unit load exists.

21.3.2* Factors affecting protection requirements such as closed/open array, clearance to ceiling, and stable/unstable piles shall be applicable only to storage of Group A plastics. This decision tree also shall be used to determine protection for commodities that are not wholly Group A plastics but contain such quantities and arrangements of the same that they are deemed more hazardous than Class IV commodities.

A.21.3.2 There are few storage facilities in which the commodity mix or storage arrangement remains constant, and a designer should be aware that the introduction of different materials can change protection requirements considerably. Design should be based on higher densities and areas of application, and the various reductions allowed should be applied cautiously. For evaluation of existing situations, however, the allowances can be quite helpful.

EDUFIRE.IR

Chapter 20 of NFPA 13 limits the amount of plastics that can be in Class IV commodities to 25 percent by volume or 15 percent by weight. If the amount of plastics exceeds those limits, the commodity needs to be protected in accordance with the rules for Group A plastics, even if the entire commodity is not plastic.

When it has been determined that the commodity is a Group A plastic and that spray sprinklers are to be used for protection with a density/area approach, the decision tree in Figure 21.3.1 should be followed to determine which column of Table 21.3.3(a) or Table 21.3.3(b) to use to establish the minimum discharge density needed from the sprinklers, unless the option of 21.3.4 is used. Paragraph 21.3.3.1 provides the area of operation that must be considered. See the commentary following 21.3.3, 21.3.3.1, and 21.3.4 for more information.

21.3.3* Design areas and densities for the appropriate storage configuration shall be selected from Table 21.3.3(a) or Table 21.3.3(b) as appropriate.

TABLE 21.3.3(a) *Design Densities for Palletized, Solid-Piled, Bin Box, or Shelf Storage of Group A Plastic Commodities (U.S. Customary Units)*

Maximum Storage Height (ft)	*Roof/Ceiling Height (ft)*	*Density (gpm/ft²)*				
		A	*B*	*C*	*D*	*E*
>5 to ≤12	Up to 15	0.2	EH2	0.3	EH1	EH2
	>15 to 20	0.3	0.6	0.5	EH2	EH2
	>20 to 32	0.4	0.8	0.6	0.45	0.7
15	Up to 20	0.3	0.6	0.5	0.4	0.45
	>20 to 25	0.4	0.8	0.6	0.45	0.7
	>25 to 35	0.45	0.9	0.7	0.55	0.85
20	Up to 25	0.4	0.8	0.6	0.45	0.7
	>25 to 30	0.45	0.9	0.7	0.55	0.85
	>30 to 35	0.6	1.2	0.85	0.7	1.1
25	Up to 30	0.45	0.9	0.7	0.55	0.85
	>30 to 35	0.6	1.2	0.85	0.7	1.1

Notes:

(1) Minimum clearance between sprinkler deflector and top of storage shall be maintained as required.

(2) Column designations correspond to the configuration of plastics storage as follows:

A: (1) Nonexpanded, unstable
(2) Nonexpanded, stable, solid unit load

B: Expanded, exposed, stable

C: (1) Expanded, exposed, unstable
(2) Nonexpanded, stable, cartoned

D: Expanded, cartoned, unstable

E: (1) Expanded, cartoned, stable
(2) Nonexpanded, stable, exposed

(3) EH1 = Density required by Extra Hazard Group 1 design curve and 19.3.3.1.1
EH2 = Density required by Extra Hazard Group 2 design curve and 19.3.3.1.1

(4) Roof/ceiling height >35 ft is not permitted.

Table 21.3.3(a) and Table 21.3.3(b) both provide information on the density needed from the sprinklers to control a fire for a variety of different storage conditions. The difference between the tables is the units of density. Users who prefer to work U.S. Customary Units (common in the United States) can use Table 21.3.3(a). For users who prefer SI Units, Table 21.3.3(b) is provided. Each table contains five columns

EDUFIRE.IR

TABLE 21.3.3(b) *Design Densities for Palletized, Solid-Piled, Bin Box, or Shelf Storage of Group A Plastic Commodities (S.I. Units)*

Maximum Storage Height (m)	***Roof/Ceiling Height (m)***	***Density (mm/min)***				
		A	***B***	***C***	***D***	***E***
>1.5 to ≤3.6	Up to 4.6	8.2	EH2	12.2	EH1	EH2
	>4.6 to 6.1	12.2	24.5	20.4	EH2	EH2
	>6.1 to 9.7	16.3	32.6	24.5	18.3	28.5
4.6	Up to 6.1	12.2	24.5	20.4	16.3	18.3
	>6.1 to 7.6	16.3	32.6	24.5	18.3	28.5
	>7.6 to 11	18.3	36.7	28.5	22.4	34.6
6.1	Up to 7.6	16.3	32.6	24.5	18.3	28.5
	>7.6 to 9.1	18.3	36.7	28.5	22.4	34.6
	>9.1 to 11	24.5	48.9	34.6	28.5	44.8
7.6	Up to 9.1	18.3	36.7	28.5	22.4	34.6
	>9.1 to 11	24.5	48.9	34.6	28.5	44.8

Notes:

(1) Minimum clearance between sprinkler deflector and top of storage shall be maintained as required.

(2) Column designations correspond to the configuration of plastics storage as follows:

A: (1) Nonexpanded, unstable
(2) Nonexpanded, stable, solid unit load

B: Expanded, exposed, stable

C: (1) Expanded, exposed, unstable
(2) Nonexpanded, stable, cartoned

D: Expanded, cartoned, unstable

E: (1) Expanded, cartoned, stable
(2) Nonexpanded, stable, exposed

(3) EH1 = Density required by Extra Hazard Group 1 design curve and 19.3.3.1.1
EH2 = Density required by Extra Hazard Group 2 design curve and 19.3.3.1.1

(4) Roof/ceiling height 35 ft (11 m) is not permitted.

of density rules. To determine which column applies to any given storage situation, the user must work through the decision tree in Figure 21.3.1 and answer the questions from top to bottom. After determining which column applies, the user can find the density by using the row that corresponds to the storage and ceiling height being protected.

There are no adjustments that apply to the densities in Table 21.3.3(a) or Table 21.3.3(b); selecting the correct column and row in the table determines the density. Note that most of the densities in the tables are above 0.34 gpm/ft^2 (13.9 mm/min), so 21.1.4 requires the use of K-11.2 or larger sprinklers to be used. Only with a select few lower storage heights in the tables, where the density is below the limit of 0.34 gpm/ft^2 (13.9 mm/min), would K-8.0 sprinklers be allowed to be used, and only in a single instance in the first row of the tables in column A would K-5.6 sprinklers be allowed.

Fire tests were conducted using K-8.0 high-temperature sprinklers to establish the rules found in the tables. If the user is protecting one of the lower storage height situations listed in the tables with K-8.0 sprinklers and a density of 0.34 gpm/ft^2 (13.9 mm/min) or less, then high-temperature sprinklers are recommended. See the last two sentences of A.21.3.3 for support of this recommendation.

EDUFIRE.IR

A.21.3.3 Test data are not available for all combinations of commodities, storage heights, and clearances to ceiling. Some of the protection criteria in this standard are based on extrapolations of test data for other commodities and storage configurations, as well as available loss data.

For example, there are very limited test data for storage of expanded plastics higher than 20 ft (6.1 m). The protection criteria in this standard for expanded plastics higher than 20 ft (6.1 m) are extrapolated from test data for expanded plastics storage 20 ft (6.1 m) and less in height and test data for nonexpanded plastics above 20 ft (6.1 m).

Further examples can be found in the protection criteria for clearance to ceiling up to 15 ft (4.6 m). Test data are limited for clearance to ceiling greater than 10 ft (3.0 m). It should be assumed that, if protection is adequate for a given storage height in a building of a given height, the same protection will protect storage of any lesser height in the same building. For example, protection adequate for 20 ft (6.1 m) storage in a 30 ft (9.1 m) building [10 ft (3.0 m) clearance to ceiling] would also protect 15 ft (4.6 m) storage in a 30 ft (9.1 m) building [15 ft (4.6 m) clearance to ceiling]. Therefore, the protection criteria in Table 21.3.3(a) for 15 ft (4.6 m) clearance to ceiling are based on the protection criteria for storage 5 ft (1.5 m) higher than the indicated height with 10 ft (3.0 m) clearance to ceiling.

Table 21.3.3(a) is based on tests that were conducted primarily with high temperature–rated, K-8 orifice sprinklers. Other tests have demonstrated that, where sprinklers are used with orifices greater than K-8, ordinary-temperature sprinklers are acceptable.

21.3.3.1* For Table 21.3.3(a) and Table 21.3.3(b), the design areas shall be as follows:

(1) The area shall be a minimum of 2500 ft^2 (230 m^2).
(2) Where Table 21.3.3(a) and Table 21.3.3(b) allow densities and areas to be selected in accordance with curve Extra Hazard Group 1 and Group 2, including 19.3.3.1.1, the following area reductions shall be permitted:
    (a) For K-8.0 (115) sprinklers used with curve Extra Hazard Group 1, the design area shall be permitted to be reduced by 25 percent, but not below 2000 ft^2 (185 m^2), where high temperature sprinklers are used.
    (b) For K-11.2 (160) or larger sprinklers, the design area shall be permitted to be reduced by 25 percent, but not below 2000 ft^2 (185 m^2), regardless of temperature rating.
(3) For closed arrays, the area shall be permitted to be reduced to 2000 ft^2 (185 m^2).

When planning a sprinkler system using the density/area approach, the user needs both the discharge density and the design area. For Section 21.3, the density comes from either Table 21.3.3(a) or Table 21.3.3(b). The area comes from 21.3.3.1 and is almost always 2500 ft^2 (232 m^2). However, there are a couple of exceptions.

The first exception is for closed arrays, for which the design area is permitted to be reduced to 2000 ft^2 (186 m^2). A closed array is defined in 3.3.8.1 as a storage array having flue spaces of 6 in. (150 mm) or less that limit air movement through the pile. These small flue spaces within the pile limit the amount of oxygen that can get to the fire and allow for a smaller design area. But the user should be careful in selecting this design option. Closed arrays are difficult to maintain. For palletized and solid-piled storage, if loads are set down more than 6 in. (150 mm) apart, the array is no longer "closed," and the sprinkler discharge might not be adequate. Unless the user can guarantee that the loads will always be close together, the storage should be designed as an open array.

Another exception to the 2500 ft^2 (232 m^2) design area is permitted where the extra hazard curves are referenced by the tables. The user is allowed to pick any point on the extra hazard curve from Chapter 19. Note that the extra hazard curves in Chapter 19 are limited to 3000 ft^2 (280 m^2) per 4.3.1.7.2 for miscellaneous storage. The area can be reduced by 25 percent for high-temperature K-8.0 sprinklers or any temperature for K-11.2 or larger sprinklers.

EDUFIRE.IR

CLOSER LOOK [21.3.3.1]

Interpolating Design Densities

For storage heights between those specifically listed in Table 21.3.3(a) and Table 21.3.3(b), interpolation of the densities is permitted. The following is an example of interpolation of densities based on storage height, as permitted in 21.3.3.2.

Group A plastics being protected in accordance with column E in Table 21.3.3(a) and Table 21.3.3(b) are being stored 18 ft (5.5 m) high in a 35 ft (11 m) high building. If the building owner is absolutely sure that the storage height is never going to exceed 18 ft (5.5 m), then the density can be interpolated between storage heights of 20 ft and 15 ft (6.1 m and 4.6 m) from Table 21.3.3(a) and Table 21.3.3(b) as follows:

1. Density from Table 21.3.3(a) and Table 21.3.3(b), column E, for 20 ft (6.1 m) of storage for Group A plastic in a building with a height up to 35 ft (10.7 m) = 1.1 gpm/ft^2 (44.8 mm/min).
2. Density from Table 21.3.3(a) and Table 21.3.3(b), column E, for 15 ft (4.6 m) of storage for Group A plastic in a building with a height of 25 ft to 35 ft (7.6 m to 11 m) = 0.85 gpm/ft^2 (34.6 mm/min).
3. Interpolated density is determined as follows:
   a. 20 ft (6.1 m) of storage = 1.1 gpm/ft^2 (44.8 mm/min) 15 ft (4.6 m) of storage = 0.85 gpm/ft^2 (34.6 mm/min) Difference = 0.25 gpm/ft^2 (10.2 mm/min).
   b. 0.25 gpm/ft^2 (10.2 mm/min) divided by 5 ft (1.5 m) [difference between 20 ft and 15 ft (6.1 m and 4.6 m)] = 0.05 gpm/ft^2 (2.0 mm/min) per foot (meter) of storage.
   c. 18 ft (5.5 m) is 3 ft × 0.05 gpm/ft^2 (0.91 m × 2.0 mm/min) greater than 0.85 gpm/ft^2 (34.6 mm/min) for 15 ft (4.6 m); therefore, 0.85 gpm/ft^2 (34.6 mm/min) + 0.15 gpm/ft^2 (6.1 mm/min) = 1.0 gpm/ft^2 (40.8 mm/min); 18 ft (5.5 m) density = 1.0 gpm/ft^2 (40.8 mm/min).
4. Density interpolated for 18 ft (5.5 m) of storage in a 35 ft (11 m) high building is 1.0 gpm/ft^2 (40.8 mm/min).

Interpolation is permitted but is not required. While NFPA 13 permits interpolation between storage heights as shown in this example, it does not permit interpolation between ceiling or roof heights (see 21.3.3.2.1).

A.21.3.3.1 Two direct comparisons between ordinary temperature– and high temperature–rated sprinklers are possible, as follows:

(1) With nonexpanded polyethylene 1 gal (3.8 L) bottles in corrugated cartons, a 3 ft (0.9 m) clearance, and the same density, approximately the same number of sprinklers operated (nine at high temperature versus seven at ordinary temperature)
(2) With exposed, expanded polystyrene meat trays, a 9.5 ft (1.9 m) clearance, and the same density, three times as many ordinary temperature–rated sprinklers operated as did high temperature–rated sprinklers (11 at high temperature versus 33 at ordinary temperature)

21.3.3.2* Interpolation of densities between storage heights shall be permitted.

A.21.3.3.2 The "up to" in Table 21.3.3(a) and Table 21.3.3(b) is intended to aid in the interpolation of densities between storage heights.

21.3.3.2.1 Interpolation of ceiling/roof heights shall not be permitted.

21.3.4 The ceiling-only protection criteria specified in Chapter 21 for rack storage of Group A plastic commodities shall be permitted to be used for solid-piled and palletized storage of the same commodity at the same height and clearance to ceiling.

Rack storage protection with sprinklers only at the ceiling (no in-rack sprinklers) has been determined through full-scale fire testing to be more challenging than that for the same height and clearance of solid-piled or palletized storage. Racks stabilize the storage during a fire and keep the fuel in a position to be easily pyrolyzed, allowing it to mix with the oxygen and continue the combustion process. Because rack storage situations are more demanding than palletized and solid-piled storage, the ceiling-only designs in this chapter are also adequate for the protection of solid-piled and palletized storage of the same commodity at the same heights and clearances covered here.

EDUFIRE.IR

21.3.5 For storage of Group A plastics between 5 ft (1.5 m) and 12 ft (3.7 m) in height, the installation requirements for extra hazard systems shall apply.

The requirement in 21.3.5 fills a gap in installation requirements for sprinkler spacing, types of pipe that can be used, and other installation requirements outlined in Chapter 10. NFPA 13 contains installation criteria for light hazard, ordinary hazard, extra hazard, and high-piled storage. There are no installation criteria for low-piled storage. If the low-piled storage can be protected as miscellaneous storage, then Chapter 4 instructs the user to follow the rules for ordinary hazard or extra hazard. However, for low-piled storage that has to be protected in accordance with Chapter 4, some rules need to be stated for sprinkler spacing (and other installation rules). For storage up to 12 ft (3.7 m) in height, the rules of Table 10.2.4.2.1(d) do not apply, because the rules in that table are only for storage above 12 ft (3.7 m). Without 21.3.5, the user would have no direction for the sprinkler spacing (and other installation) criteria that should apply to low-piled storage situations.

21.4 Control Mode Density/Area Sprinkler Protection Criteria for Rack Storage of Class I Through Class IV Commodities.

The term *control mode density/area sprinkler* refers to the standard spray sprinkler that has been used extensively for sprinkler protection since 1955 and has a K-factor of 5.6 or larger. The protection criteria for this type of sprinkler are provided in terms of a density (flow divided by the area of coverage of the sprinkler) and an area of sprinkler operation that will be translated into a maximum number of sprinklers that might be expected to open in a fire event. Similar types of spray sprinklers also can be listed as control mode specific application (CMSA) sprinklers. The protection criteria for CMSA sprinklers are provided in terms of the minimum water pressure necessary at the sprinkler and a specific number of sprinklers in the design area. Protection criteria for CMSA sprinklers for rack storage of Class I through Class IV commodities up to 25 ft (7.6 m) in height are found in Chapter 22.

Where CMDA sprinklers are used for the protection of storage up to 25 ft (7.6 m) in height, the ceiling sprinklers act as the primary protection for the full height of the commodity to provide cooling at the ceiling and structural protection at the roof deck where no in-rack sprinklers are installed. Where in-rack sprinklers are installed, they are expected to enhance control of the fire growth and spread of fire within the rack, allowing for reduced ceiling densities.

21.4.1 Protection Criteria for Rack Storage of Class I Through Class IV Commodities Stored Over 12 ft (3.7 m) Up to and Including 25 ft (7.6 m) in Height.

21.4.1.1* Ceiling sprinkler water demand shall be determined in accordance with 21.4.1.2 for single- and double-row racks or 21.4.1.3 for multiple-row racks. *(See Section C.14.)*

A.21.4.1.1 Bulkheads are not a substitute for sprinklers in racks. Their installation does not justify reduction in sprinkler densities or design operating areas as specified in the design curves.

C.14 [21.4.1.1 and 25.2.3.2.3.1] Tests 65 and 66, compared with Test 69, and Test 93, compared with Test 94, indicated a reduction in areas of application of 44.5 percent and 45.5 percent, respectively, with high temperature–rated sprinklers as compared with ordinary temperature–rated sprinklers. Other extensive Factory Mutual tests produced an average reduction of 40 percent. Design curves are based on this area reduction. In constructing the design curves, the high-temperature curves above 3600 ft^2 (335 m^2) of application, therefore, represent 40 percent reductions in area of application of the ordinary temperature curves in the 6000 ft^2 to 10,000 ft^2 (555 m^2 to 930 m^2) range.

Test 84 indicated the number of intermediate temperature–rated sprinklers operating is essentially the same as ordinary temperature–rated sprinklers.

EDUFIRE.IR

21.4.1.2* For single- or double-row racks for Class I, Class II, Class III, or Class IV commodities, encapsulated or nonencapsulated in single- or double-row racks, ceiling sprinkler water demand in terms of density [gpm/ft^2 (mm/min)] and area of sprinkler operation [ft^2 (m^2) of ceiling or roof] shall be selected from the density/area curves of Figure 21.4.1.2(a) through Figure 21.4.1.2(e) that are appropriate for each commodity and configuration as shown in Table 21.4.1.2 and shall be modified as appropriate by 21.4.1.4. These requirements shall apply to portable racks arranged in the same manner as single- or double-row racks.

TABLE 21.4.1.2 *Single- or Double-Row Racks — Storage Height Over 12 ft (3.7 m) Up to and Including 25 ft (7.6 m)*

Height	*Commodity Class*	*Encapsulated*	*Aisles**		*Ceiling Sprinkler Water Demand*		
			ft	*m*	*Figure*	*Curves*	*Apply Figure 21.4.1.4.1*
Over 12 ft (3.7 m) up to and including 20 ft (6.1 m)	I	No	4	1.2	21.4.1.2(a)	B and D	Yes
			8	2.4		A and C	
		Yes	4	1.2	21.4.1.2(e)	C and D	Yes
			8	2.4		A and B	
	II	No	4	1.2	21.4.1.2(b)	C and D	Yes
			8	2.4		A and B	
		Yes	4	1.2	21.4.1.2(e)	C and D	Yes
			8	2.4		A and B	
	III	No	4	1.2	21.4.1.2(c)	C and D	Yes
			8	2.4		A and B	
		Yes	4	1.2	In-rack sprinklers required. See Chapter 25.	NA	NA
			8	2.4			
	IV	No	4	1.2	21.4.1.2(d)	C and D	Yes
			8	2.4		A and B	
		Yes	4	1.2	In-rack sprinklers required. See Chapter 25.	NA	NA
			8	2.4			
Over 20 ft (6.1 m) up to and including 22 ft (6.7 m)	I	No	4	1.2	21.4.1.2(a)	A and C	Yes
			8	2.4		B and D	
		Yes	4	1.2	In-rack sprinklers required. See Chapter 25.	NA	NA
			8	2.4			
	II	No	4	1.2	21.4.1.2(b)	C and D	Yes
			8	2.4		A and B	
		Yes	4	1.2	In-rack sprinklers required. See Chapter 25.	NA	NA
			8	2.4			
	III	No	4	1.2	21.4.1.2(c)	C and D	Yes
			8	2.4		A and B	
		Yes	4	1.2	In-rack sprinklers required. See Chapter 25.	NA	NA
			8	2.4			
	IV	No	4	1.2	21.4.1.2(d)	C and D	Yes
			8	2.4		A and B	
		Yes	4	1.2	In-rack sprinklers required. See Chapter 25.	NA	NA
			8	2.4			

(Continues)

EDUFIRE.IR

TABLE 21.4.1.2 Continued

Height	Commodity Class	Encapsulated	Aisles* ft	Aisles* m	Ceiling Sprinkler Water Demand: Figure	Ceiling Sprinkler Water Demand: Curves	Ceiling Sprinkler Water Demand: Apply Figure 21.4.1.4.1
Over 22 ft (6.7 m) up to and including 25 ft (7.6 m)	I	No	4	1.2	21.4.1.2(a)	A and C	Yes
			8	2.4		B and D	
		Yes	4	1.2	In-rack sprinklers required. See Chapter 25.	NA	NA
			8	2.4			
	II	No	4	1.2	21.4.1.2(b)	C and D	Yes
			8	2.4		A and B	
		Yes	4	1.2	In-rack sprinklers required. See Chapter 25.	NA	NA
			8	2.4			
	III	No	4	1.2	21.4.1.2(c)	C and D	Yes
			8	2.4		A and B	
		Yes	4	1.2	In-rack sprinklers required. See Chapter 25.	NA	NA
			8	2.4			
	IV	No	4	1.2	In-rack sprinklers required. See Chapter 25.	NA	NA
			8	2.4			
		Yes	4	1.2	In-rack sprinklers required. See Chapter 25.	NA	NA
			8	2.4			

*See 21.4.1.2.1 for interpolation of aisle widths.

NA: Not applicable.

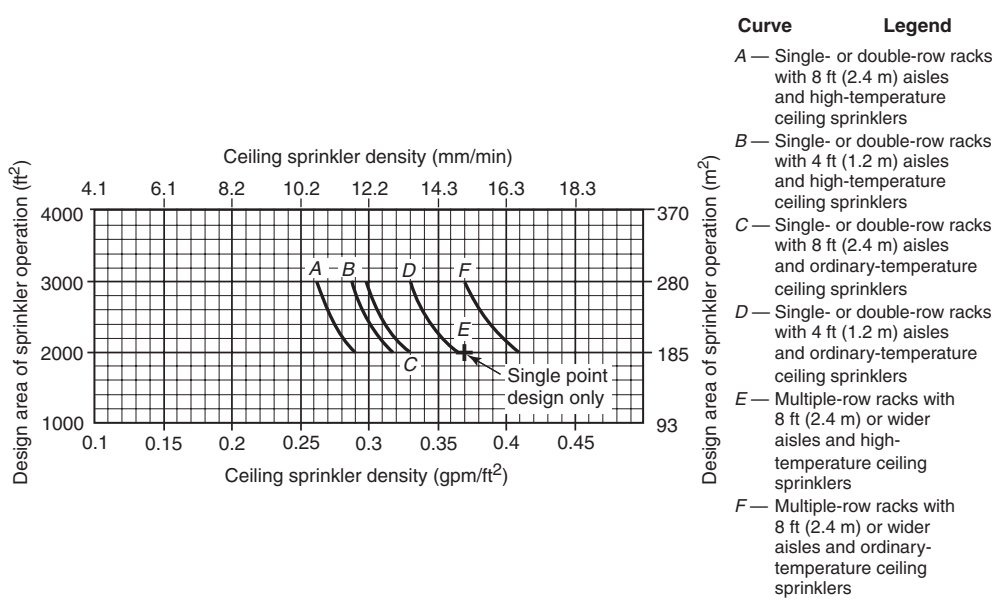

N ***FIGURE 21.4.1.2(a)*** *Sprinkler System Design Curves — 20 ft (6.1 m) High Rack Storage — Class I Nonencapsulated Commodities — Conventional Pallets.*

EDUFIRE.IR

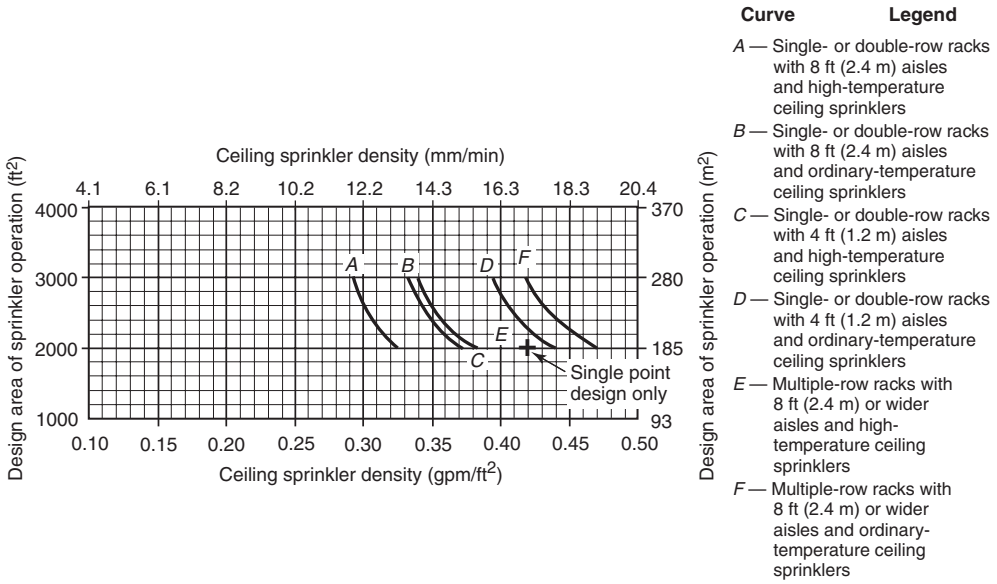

FIGURE 21.4.1.2(b) *Sprinkler System Design Curves — 20 ft (6.1 m) High Rack Storage — Class II Nonencapsulated Commodities — Conventional Pallets.*

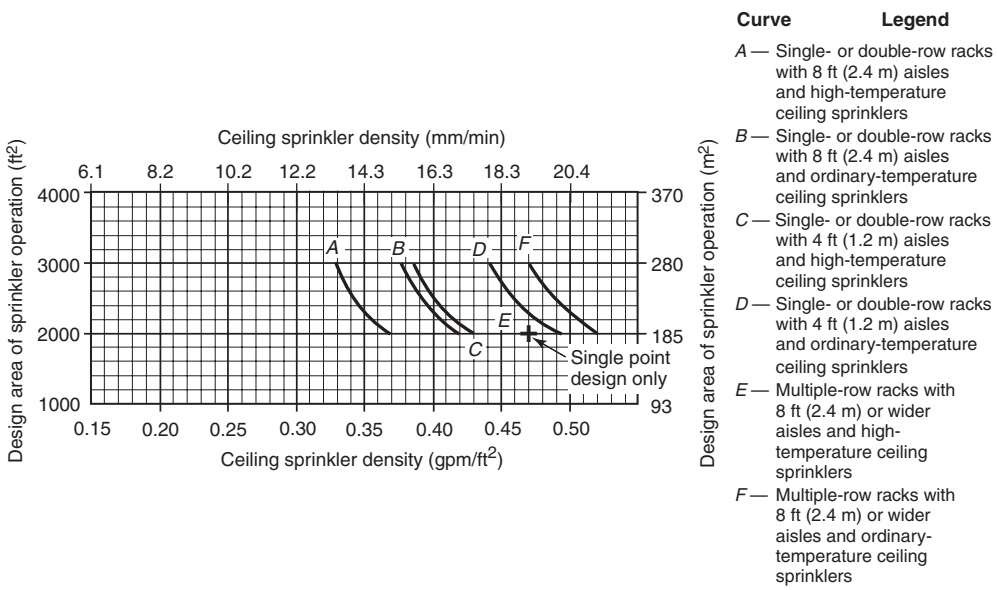

FIGURE 21.4.1.2(c) *Sprinkler System Design Curves — 20 ft (6.1 m) High Rack Storage — Class III Nonencapsulated Commodities — Conventional Pallets.*

There are several different density/area curves that apply to the rack storage of Class I through Class IV commodities. To help the user determine which density/area curve to use for any given single- or double-row rack situation, Table 21.4.1.2 organizes the information so that the user does not need to hunt through the legends of seven different figures. As long as users know the storage height, the commodity classification, whether or not the storage is encapsulated, the width of the aisles, and whether or not they need to (or want to) install in-rack sprinklers, users will be able to determine which of the 53 density/area curves apply to their particular situation.

EDUFIRE.IR

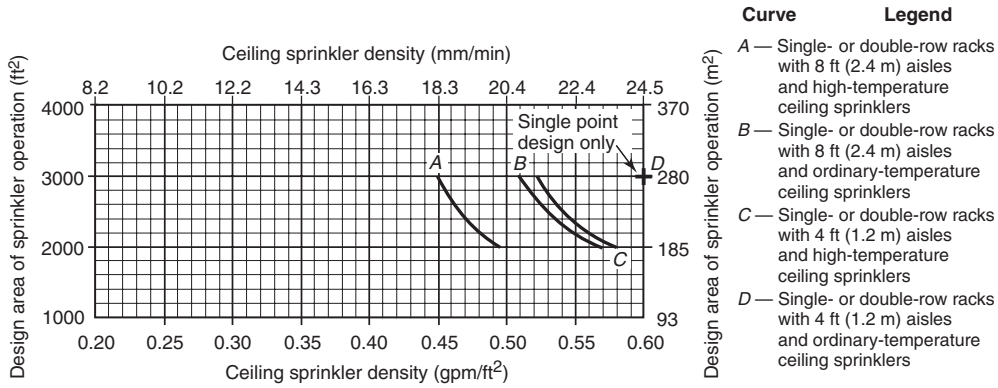

Note: Curves *C* and *D* also apply to ceiling sprinklers only for multiple-row rack storage up to and including 15 ft (4.6 m) high, and Figure 21.4.1.4.1 shall not be applied.

FIGURE 21.4.1.2(d) *Sprinkler System Design Curves — 20 ft (6.1 m) High Rack Storage — Class IV Nonencapsulated Commodities — Conventional Pallets.*

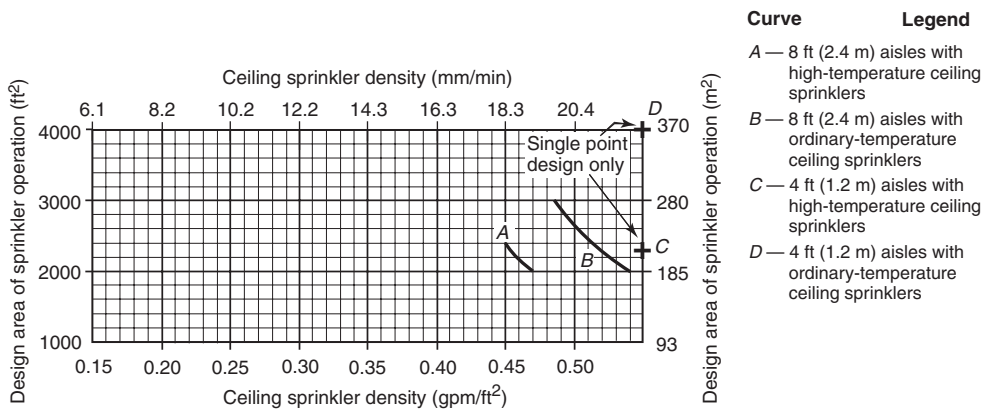

FIGURE 21.4.1.2(e) *Single- or Double-Row Racks — 20 ft (6.1 m) High Rack Storage — Sprinkler System Design Curves — Class I and Class II Encapsulated Commodities — Conventional Pallets.*

A.21.4.1.2 Data indicate that the sprinkler protection criteria in Figure 21.4.1.2(a) through Figure 21.4.1.2(e) are ineffective, by themselves, for rack storage with solid shelves, if the required flue spaces are not maintained. Use of Figure 21.4.1.2(a) through Figure 21.4.1.2(e), along with the additional provisions that are required by this standard, can provide acceptable protection.

FAQ [21.4.1.2.1]

For aisles greater than 8 ft (2.4 m) in width, do the sprinkler protection requirements decrease?

There is no credit given to situations where the aisles are greater than 8 ft (2.4 m) wide. For aisle widths less than 8 ft (2.4 m), a higher density is needed to prevent a fire from jumping the aisle, but for aisle widths greater than 8 ft (2.4 m), aisle jump is no longer a controlling factor in protection requirements.

21.4.1.2.1* Design densities for single- and double-row racks shall be selected to correspond to aisle width. *(See Section C.15.)*

(A) For aisle widths between 4 ft (1.2 m) and 8 ft (2.4 m), the rules for 4 ft (1.2 m) aisle width shall be used or direct linear interpolation between the densities shall be permitted.

(B) The density given for 8 ft (2.4 m) wide aisles shall be applied to aisles wider than 8 ft (2.4 m).

(C) The density given for 4 ft (1.2 m) wide aisles shall be applied to aisles more narrow than 4 ft (1.2 m) down to 3½ ft (1.1 m).

(D) Where aisles are more narrow than 3½ ft (1.1 m), racks shall be considered to be multiple-row racks.

EDUFIRE.IR

A.21.4.1.2.1 The aisle width and the depth of racks are determined by material-handling methods. The widths of aisles should be considered in the design of the protection system. Storage in aisles can render protection ineffective and should be discouraged.

C.15 [21.4.1.2.1] Tests were not conducted with aisles wider than 8 ft (2.4 m) or narrower than 4 ft (1.2 m). It is, therefore, not possible to determine whether lower ceiling densities should be used for aisle widths greater than 8 ft (2.4 m) or if higher densities should be used for aisle widths less than 4 ft (1.2 m).

21.4.1.3 Multiple-Row Racks — Storage Height Over 12 ft (3.7 m) Up to and Including 25 ft (7.6 m).

Experience and full-scale fire testing have revealed that there are two kinds of multiple-row racks: those that are easier to protect and those that are harder to protect. The factors that make a multiple-row rack easy or hard to protect are the depth of the racks and the width of the aisles separating the rack structures. For a multiple-row rack to be easier to protect, it must have a relatively shallow depth and have a wide aisle separating it from other rack structures. If both of those criteria cannot be met, the rack must be considered hard to protect.

NFPA 13 provides two different tables of discharge criteria for multiple-row racks 25 ft (7.6 m) in height or less being protected using a density/area approach: Table 21.4.1.3.1 for racks that are easier to protect and Table 21.4.1.3.2 for racks that are harder to protect. If a rack is more than 16 ft (4.9 m) deep, it does not matter how wide the aisles are that separate the rack from other rack structures; it must be considered a rack that is hard to protect, and the discharge criteria must come from Table 21.4.1.3.2.

21.4.1.3.1 Multiple-Row Racks — Rack Depth Up to and Including 16 ft (4.9 m) with Aisles 8 ft (2.4 m) or Wider.

For Class I, Class II, Class III, or Class IV commodities, encapsulated or nonencapsulated, ceiling sprinkler water demand in terms of density [gpm/ft^2 (mm/min)] and area of sprinkler operation [ft^2 (m^2) of ceiling or roof] shall be selected from the density/area curves of Figure 21.4.1.2(a) through Figure 21.4.1.2(e) that are appropriate for each commodity and configuration as shown in Table 21.4.1.3.1 and shall be modified as appropriate by 21.4.1.4. The protection criteria shall apply to portable racks arranged in the same manner as multiple-row racks.

The aisle width indicated in Table 21.4.1.3.1 refers to the aisles between adjacent multi-row rack structure arrays and not the aisles between individual racks that make up a multiple-row rack array itself. The table is to be used in the same manner as Table 21.4.1.2 (see the commentary on that section) except that encapsulation is addressed by increasing design density as opposed to using a separate curve. Typically, density is increased by 25 percent, with the exception that a 50 percent increase in density is required for encapsulated Class IV commodity. This adjustment is for the encapsulating plastic, which helps the commodity shed water and stay dry, making it more difficult to keep the fire from spreading into the commodity.

21.4.1.3.2 Multiple-Row Racks — Rack Depth Over 16 ft (4.9 m) or Aisles More Narrow Than 8 ft (2.4 m).

For Class I, Class II, Class III, or Class IV commodities, encapsulated or nonencapsulated, ceiling sprinkler water demand in terms of density [gpm/ft^2 (mm/min)] and area of sprinkler operation [ft^2 (m^2) of ceiling or roof] shall be selected from the density/area curves of Figure 21.4.1.2(a) through Figure 21.4.1.2(e) that are appropriate for each commodity and configuration as shown in Table 21.4.1.3.2 and shall be modified as appropriate by 21.4.1.4. The protection criteria shall apply to portable racks arranged in the same manner as multiple-row racks.

The aisle width indicated in Table 21.4.1.3.2 refers to the aisles between adjacent multiple-row rack structure arrays, not the aisles between individual racks that make up a multiple-row rack array itself. Table 21.4.1.3.2 is to be used in the same manner as Table 21.4.1.2 (see the commentary on that section) except that encapsulation is addressed by increasing design density as opposed to using a separate curve. Typically, density is increased by 25 percent, with the exception that a 50 percent increase in density is required for encapsulated Class IV commodity. This adjustment is for the encapsulating plastic, which helps the commodity shed water and stay dry, making it more difficult to keep the fire from spreading into the commodity.

EDUFIRE.IR

TABLE 21.4.1.3.1 *Multiple-Row Racks — Rack Depth Up to and Including 16 ft (4.9 m), Aisles 8 ft (2.4 m) or Wider and Storage Height Over 12 ft (3.7 m) Up to 25 ft (7.6 m)*

Height	*Commodity Class*	*Encapsulated*	*Ceiling Sprinkler Water Demand*			
			Figure	*Curves*	*Apply Figure 21.4.1.4.1*	*1.25 × Density*
Over 12 ft (3.7 m) up to and including 15 ft (4.6 m)	I	No	21.4.1.2(a)	E and F	Yes	No
		Yes	21.4.1.2(a)	E and F		Yes
	II	No	21.4.1.2(b)	E and F	Yes	No
		Yes	21.4.1.2(b)	E and F		Yes
	III	No	21.4.1.2(c)	E and F	Yes	No
		Yes	In-rack sprinklers required. See Chapter 25.	NA	NA	NA
	IV	No	In-rack sprinklers required. See Chapter 25.	NA	No	No
		Yes	In-rack sprinklers required. See Chapter 25.	NA	NA	NA
Over 15 ft (4.6 m) up to and including 20 ft (6.1 m)	I	No	21.4.1.2(a)	E and F	Yes	No
		Yes	21.4.1.2(a)	E and F		Yes
	II	No	21.4.1.2(b)	E and F	Yes	No
		Yes	21.4.1.2(b)	E and F		Yes
	III	No	21.4.1.2(c)	E and F	Yes	No
		Yes	In-rack sprinklers required. See Chapter 25.	NA	NA	NA
	IV	No				
		Yes				
Over 20 ft (6.1 m) up to and including 25 ft (7.6 m)	I	No	21.4.1.2(a)	E and F	Yes	No
		Yes	In-rack sprinklers required. See Chapter 25.	NA	NA	NA
	II	No				
		Yes				
	III	No				
		Yes				
	IV	No				
		Yes				

NA: Not applicable.

EDUFIRE.IR

TABLE 21.4.1.3.2 *Multiple-Row Racks — Rack Depth Over 16 ft (4.9 m) or Aisles Narrower Than 8 ft (2.4 m), Storage Height Over 12 ft (3.7 m) Up to and Including 25 ft (7.6 m)*

Height	*Commodity Class*	*Encapsulated*	*Ceiling Sprinkler Water Demand*			
			Figure	*Curves*	*Apply Figure 21.4.1.4.1*	*1.25 × Density*
Over 12 ft (3.7 m) up to and including 15 ft (4.6 m)	I	No	21.4.1.2(a)	E and F	Yes	No
		Yes	21.4.1.2(a)	E and F		Yes
	II	No	21.4.1.2(b)	E and F	Yes	No
		Yes	21.4.1.2(b)	E and F		Yes
	III	No	21.4.1.2(c)	E and F	Yes	No
		Yes	In-rack sprinklers required. See Chapter 25.			
	IV	No	In-rack sprinklers required. See Chapter 25.	NA	No	No
		Yes	In-rack sprinklers required. See Chapter 25.			
Over 15 ft (4.6 m) up to and including 20 ft (6.1 m)	I	No	In-rack sprinklers required. See Chapter 25.	NA	NA	NA
		Yes				
	II	No				
		Yes				
	III	No				
		Yes				
	IV	No				
		Yes				
Over 20 ft (6.1 m) up to and including 25 ft (7.6 m)	I	No	In-rack sprinklers required. See Chapter 25.	NA	NA	NA
		Yes				
	II	No				
		Yes				
	III	No				
		Yes				
	IV	No				
		Yes				

NA: Not applicable.

EDUFIRE.IR

21.4.1.3.3 Where Class I, Class II, and Class III commodities are encapsulated, ceiling sprinkler density shall be 25 percent greater than for nonencapsulated.

21.4.1.3.4 Where Class IV commodities are encapsulated, ceiling sprinkler density shall be 50 percent greater than for nonencapsulated.

21.4.1.4 Ceiling Sprinkler Density Adjustments.

The protection criteria previously discussed in this chapter might need to be further adjusted based on the special conditions outlined in 21.4.1.4. In most cases, these special conditions allow ceiling sprinkler densities to be reduced where extra (more than the minimum required) in-rack sprinklers are installed or where low clearance exists between the top of storage and the ceiling of the room. However, there are other special situations that require the sprinkler density to increase. The user of NFPA 13 should read 21.4.1.4.1 and 21.4.1.4.2 carefully and apply the adjustments if conditions warrant.

21.4.1.4.1 For storage height over 12 ft (3.7 m) up to and including 25 ft (7.6 m) protected with ceiling sprinklers only, densities obtained from design curves shall be adjusted in accordance with Figure 21.4.1.4.1.

Figure 21.4.1.4.1 is used to adjust the density for certain storage configurations as outlined in this paragraph and also designated in Table 21.4.1.2, Table 21.4.1.3.1, and Table 21.4.1.3.2. The base protection criteria assume a storage height of 20 ft (6.1 m), because that was the storage height used for most of the full-scale fire tests that were performed to create this protection. Note that the 100 percent adjustment point on the curve in Figure 21.4.1.4.1 runs through the 20 ft (6.1 m) storage height. Rack storage less than 20 ft (6.1 m) in height is allowed to have a reduced density (adjustment less than 100 percent), and storage over 20 ft (6.1 m) is required to have a greater density (adjustment greater than 100 percent).

21.4.1.4.2 Where solid, flat-bottom, combustible pallets (slave pallets) are used with storage height up to and including 25 ft (7.6 m), the densities that are indicated in the design curves

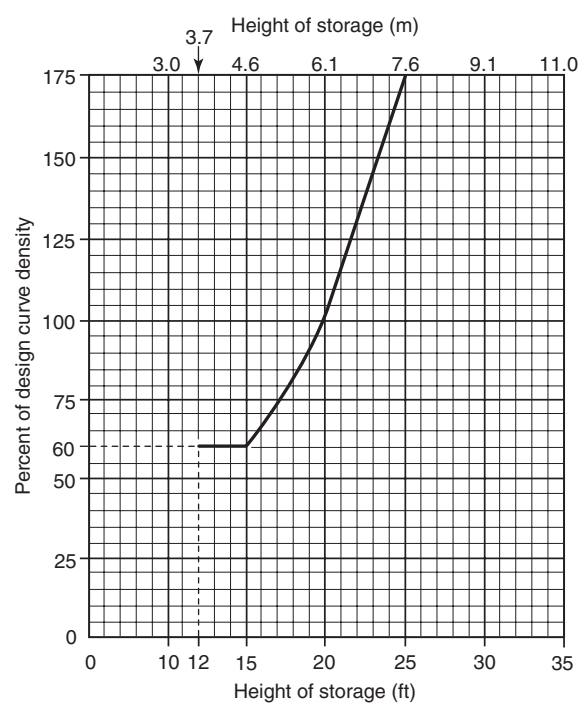

FIGURE 21.4.1.4.1 *Ceiling Sprinkler Density vs. Storage Height.*

EDUFIRE.IR

shown in Figure 21.4.1.2(a) through Figure 21.4.1.2(e), based on conventional pallets, shall be increased 20 percent for the given area.

(A) The percentage shall be applied to the density determined in accordance with 21.4.1.4.

(B) The increase in density shall not apply where in-rack sprinklers are utilized in the design.

21.4.2 Control Mode Density/Area Sprinkler Protection Criteria for Rack Storage of Class I Through Class IV Commodities Stored Over 25 ft (7.6 m) in Height.

N **21.4.2.1*** The protection criteria requirements for rack storage of Class I through Class IV commodities stored over 25 ft (7.6 m) in height protected by CMDA sprinklers shall be in accordance with Chapter 25.

A.21.4.2.1 Water demand for storage height over 25 ft (7.6 m) on racks separated by aisles at least 4 ft (1.2 m) wide and with more than 10 ft (3.0 m) between the top of storage and the sprinklers should be based on sprinklers in a 2000 ft^2 (185 m^2) operating area for double-row racks and a 3000 ft^2 (279 m^2) operating area for multiple-row racks discharging a minimum of 0.18 gpm/ft^2 (7.3 mm/min) for Class I commodities, 0.21 gpm/ft^2 (8.5 mm/min) for Class II and Class III commodities, and 0.25 gpm/ft^2 (10.2 mm/min) for Class IV commodities for ordinary temperature–rated sprinklers or a minimum of 0.25 gpm/ft^2 (10.2 mm/min) for Class I commodities, 0.28 gpm/ft^2 (11.4 mm/min) for Class II and Class III commodities, and 0.32 gpm/ft^2 (13 mm/min) for Class IV commodities for high temperature–rated sprinklers. (*See A.25.9.2.3.1.*)

Where such storage is encapsulated, ceiling sprinkler density should be 25 percent greater than for nonencapsulated storage.

Data indicate that the sprinkler protection criteria in 21.4.2.1 are ineffective, by themselves, for rack storage with solid shelves if the required flue spaces are not maintained. Use of 21.4.2.1, along with the additional provisions that are required by this standard, can provide acceptable protection.

21.4.2.1.1 Where storage as described in 21.4.2.2 is encapsulated, ceiling sprinkler density shall be 25 percent greater than for nonencapsulated storage.

21.4.2.2 Where such storage is encapsulated, ceiling sprinkler density shall be 25 percent greater than for nonencapsulated storage.

21.5 Control Mode Density/Area Sprinkler Protection Criteria for Single-, Double-, and Multiple-Row Racks for Group A Plastic Commodities Stored Up to and Including 25 ft (7.6 m) in Height.

C.22 [21.5] The protection of Group A plastics by extra large orifice (ELO) sprinklers designed to provide 0.6 gpm/ft^2/2000 ft^2 (24.5 mm/min / 185 m^2) or 0.45 gpm/ft^2/2000 ft^2 (18.3 mm/min/186 m^2) without the installation of in-rack sprinklers was developed from full-scale testing conducted with various double-row rack storage arrangements of a cartoned Group A nonexpanded plastic commodity at the Factory Mutual Research Corporation (FMRC) test facility. The results of this test program are documented in the FMRC technical report, FMRC J.I. 0X1R0.RR, "Large-Scale Fire Tests of Rack Stored Group A Plastics in Retail Operation Scenarios Protected by Extra Large Orifice (ELO) Sprinklers." The test program was initiated to address the fire protection issues presented by warehouse-type retail stores with regard to the display and storage of Group A plastic commodities including, but not limited to, acrylonitrile-butadiene-styrene copolymer (ABS) piping, polyvinyl chloride (PVC) hose and hose racks, tool boxes, polypropylene trash and storage containers, and patio furniture. Tests 1 and 2 of this series included protection of the Group A plastic commodity

EDUFIRE.IR

stored to 20 ft (6.1 m) under a 27 ft (8.2 m) ceiling by a design density of 0.6 gpm/ft^2 (24.5 mm/min) utilizing ELO sprinklers. The results of the testing program clearly demonstrate the acceptable performance of sprinkler systems that protect storage configurations involving Group A plastics up to 20 ft (6.1 m) in height under a 27 ft (8.2 m) ceiling where using ELO sprinklers to deliver a design density of 0.6 gpm/ft^2 (24.5 mm/min) and Group A plastics up to 14 ft (4.2 m) in height under a 22 ft (6.7 m) ceiling where using ELO sprinklers to deliver a design density of 0.45 gpm/ft^2 (18.3 mm/min). The tabulation of the pertinent tests shown in Table C.22 demonstrates acceptable performance.

The term *control mode density/area sprinkler* refers to the standard spray sprinkler that has been used extensively for sprinkler protection since 1955 and has a K-factor of 5.6 or larger. The protection criteria for this type of sprinkler are provided in terms of a density (flow divided by the area of coverage of the sprinkler) and an area of sprinkler operation that will be translated into a maximum number of sprinklers that might be expected to open in a fire event. Similar types of spray sprinklers also can be listed as control mode specific application (CMSA) sprinklers. The protection criteria for CMSA sprinklers are provided in terms of the minimum water pressure necessary at the sprinkler and a specific number of sprinklers in the design area. Protection criteria for CMSA sprinklers for rack storage of Group A plastics up to 25 ft (7.6 m) in height are found in Chapter 22.

Where CMDA sprinklers are used for the protection of storage up to 25 ft (7.6 m) in height, the ceiling sprinklers act as the primary protection for the full height of the commodity to provide cooling at the ceiling and structural protection at the roof deck where no in-rack sprinklers are installed. Where in-rack sprinklers are installed, they are expected to enhance control of the fire growth and spread of fire within the rack allowing for reduced ceiling densities. For in-rack sprinkler requirements see Chapter 25.

Subsection 21.4.2 is not specific about the size of the sprinklers that are to be used at the ceiling. Because most of the discharge criteria for ceiling sprinklers are above 0.34 gpm/ft^2 (13.9 mm/min), 21.1.4 would require the use of K-11.2 sprinklers or larger in the situations discussed in 21.4.2.

21.5.1 Plastic commodities shall be protected in accordance with this section. *(See Section C.21.)*

C.21 [21.5.1] In the RSP rack storage test series as well as the stored plastics program palletized test series, compartmented 16 oz (1.1 bar) polystyrene jars were found to produce significantly higher protection requirements than the same commodity in a nested configuration. Polystyrene glasses and expanded polystyrene plates were comparable to the nested jars.

Different storage configurations within cartons or different products of the same basic plastic might, therefore, require reduced protection requirements.

In Test RSP-7, with nominal 15 ft (4.6 m) high storage with compartmented jars, a 0.6 gpm/ft^2 (24.5 mm/min) density, 8 ft (2.4 m) aisles, and a 10 ft (3.0 m) clearance to ceiling, 29 sprinklers opened. In Tests RSP-4 with polystyrene glasses, RSP-5 with expanded polystyrene plates, and RSP-16 with nested polystyrene jars all stored at nominal 15 ft (4.6 m) height, 10 ft (3.1 m) clearance to ceiling, 8 ft (2.4 m) aisles, and 0.6 gpm/ft^2 (24.5 mm/min) density, only four sprinklers opened.

However, Test RSP-11, with expanded polystyrene plates and 6 ft (1.8 m) aisles, demonstrated an increase in the number of operating sprinklers to 29. Test RSP-10 with expanded polystyrene plates, nominally 15 ft (4.6 m) high with a 10 ft (3.1 m) clearance and 8 ft (2.4 m) aisles, but protected only by 0.45 gpm/ft^2 (18.3 mm/min) density, opened 46 sprinklers and burned 100 percent of the plastic commodity.

At a nominal 20 ft (6.1 m) storage height with 8 ft (2.4 m) aisles, a 3 ft (900 mm) clearance to ceiling, and a 0.6 gpm/ft^2 (24.5 mm/min) density opened four sprinklers with polystyrene glasses in Test RSP-2 and 11 sprinklers with expanded polystyrene plates in Test RSP-6. In Test RSP-8, however, with the clearance to ceiling increased to 10 ft (3.1 m) and other variables held constant, 51 sprinklers opened, and 100 percent of the plastic commodity burned.

Test RSP-3, with polystyrene glasses at a nominal height of 25 ft (7.6 m) with a 3 ft (900 mm) clearance to ceiling, 8 ft (2.4 m) aisles, and 0.6 gpm/ft^2 (24.5 mm/min) ceiling sprinkler density in combination with one level of in-rack sprinklers, resulted in four ceiling

EDUFIRE.IR

sprinklers and two in-rack sprinklers operating. Test RSP-9, with the same configuration but with polystyrene plates, opened 12 ceiling sprinklers and three in-rack sprinklers.

No tests were conducted with compartmented polystyrene jars at storage heights in excess of a nominal 15 ft (4.6 m) as a part of this program.

21.5.1.1 For Group A plastic commodities in cartons, encapsulated or nonencapsulated in single-, double-, and multiple-row racks and with a clearance to ceiling up to and including 10 ft (3.1 m), ceiling sprinkler water demand in terms of density [gpm/ft^2 (mm/min)] and area of operation [ft^2 (m^2)] shall be selected from Table 21.5.1.1.

TABLE C.22 *Summary of Test Results for Plastic Commodities Using ⅝ in. (15.9 mm) Orifice Sprinklers*

	Date of Test						
Test Parameters	***8/20/93***	***8/25/93***	***9/2/93***	***10/7/93***	***2/17/94***	***2/25/94***	***4/27/94***
Type of shelving	Slatted wood	Slatted wood	Slatted wood	Slatted wood	Slatted wood	Slatted wood	Wire mesh
Other conditions/ inclusions	—	—	—	—	Draft curtains	Draft curtains	—
Storage height (ft-in.)	19-11	19-11	15-4	15-4	19-11	19-11	13-11
Number of tiers	6[a]	6[a]	5[b]	5[b]	6[a]	6[b]	3
Clearance to ceiling/ sprinklers (ft-in.)	6-10/6-3	6-10/6-3	11-5/10-10	11-5/10-10	6-10/6-3	6-10/6-3	8-4/7-9
Longitudinal/ transverse flues (in.)	6/6 to 7½	6/6 to 7½	6/6 to 7	6/6 to 7½	6/6 to 7½	6/6 to 7½	6/3[c]
Aisle width (ft)	7½	7½	7½	7½	7½	7½	7½
Ignition centered below (number of sprinklers)	2	2	1	1	2	2	1
Sprinkler orifice size (in.)	0.64	0.64	0.64	0.64	0.64	0.64	0.64
Sprinkler temperature rating (°F)	165	286	286	165	165	286	286
Sprinkler RTI (ft-sec)$^{1/2}$	300	300	300	300	300	300	300
Sprinkler spacing (ft × ft)	8 × 10	8 × 10	8 × 10	8 × 10	8 × 10	8 × 10	10 × 10
Sprinkler identification	ELO-231	ELO-231	ELO-231	ELO-231	ELO-231	ELO-231	ELO-231
Constant water pressure (psi)	19	19	19	19	19	19	15.5
Minimum density (gpm/ft^2)	0.6	0.6	0.6	0.6	0.6	0.6	0.45
Test Results							
First sprinkler operation (min:sec)	2:03	2:25	1:12	0:44	1:25	0:52	0:49
Last sprinkler operation (min:sec)	2:12	15:19	6:34	7:34	15:54	14:08	10:58
Total sprinklers opened	4	9	7	13	35	18	12
Total sprinkler discharge (gpm)	205	450	363	613	1651	945	600
Average discharge per sprinkler (gpm)	51	50	52	47	47	52	50
Peak/maximum 1-min average gas temperature (°F)	1107/566	1412/868	965/308	662/184	1575/883	1162/767	1464/895
Peak/maximum 1-min average steel temperature (°F)	185/172	197/196	233/232	146/145	226/225	255/254	502/500

(Continues)

EDUFIRE.IR

TABLE C.22 *Continued*

Test Parameters	Date of Test						
	8/20/93	*8/25/93*	*9/2/93*	*10/7/93*	*2/17/94*	*2/25/94*	*4/27/94*
Peak/maximum 1-min average plume velocity (ft/sec)	27/15	25/18	18/15[d]	14/10[d]	26/23	20/18[d]	33/20
Peak/maximum 1-min heat flux (Btu/ft²/sec)	0.6/0.5	2.0/1.9	2.8/2.5	1.1/0.8	1.0/0.9	4.8/3.0	1.6/1.4
Aisle jump, east/west target ignition (min:sec)	None	8:24/None	5:35/10:10	None	None	[e]/8:18	[e]/None
Equivalent number of pallet loads consumed	3	9	6	5	12	13	12
Test duration (min)	30	30	30	30	30	30	30
Results acceptable	Yes	Yes	Yes	Yes	No[f]	No[g]	Yes

For SI units, 1 ft = 0.305 m; 1 in. = 25.4 mm; °F = (1.8 ×°C) + 32; °C = (°F – 32)/1.8; 1 psi = 0.069 bar; 1 gpm = 3.8 L/min; 1 ft/sec = 0.31 m/sec; 1 gpm/ft² = 40.746 mm/min.

[a]Main (ignition) racks divided into five or six tiers; bottom tiers each approximately 2 ft (600 mm) high and upper tiers each about 5 ft (1.5 m) high; wood shelving below commodity at second through fifth tiers.

[b]Main (ignition) racks divided into five or six tiers; bottom tiers each approximately 2 ft (600 mm) high and upper tiers each about 5 ft (1.5 m) high; wood shelving below commodity at second through fifth tiers; wire mesh shelving below commodity at sixth tier or below fifth (top) tier commodity.

[c]Transverse flues spaced 8 ft (2.4 m) apart [versus 3½ ft (1.1 m) apart in all other tests].

[d]Instrumentation located 5 ft (1.5 m) north of ignition.

[e]Minor surface damage to cartons.

[f]High water demand.

[g]Excessive firespread; marginally high water demand.

TABLE 21.5.1.1 *Control Mode Density/Area Sprinkler Protection Criteria for Single-, Double-, and Multiple-Row Racks for Group A Plastic Commodities in Cartons Stored Up to and Including 25 ft (7.6 m) in Height*

Commodity	*Storage height ft (m)*	*Maximum Clearance from Top of Storage to Ceiling ft (m)*	*Maximum Ceiling Height ft (m)*	*Ceiling Sprinklers Density Clearance to Ceiling Up to 10 ft gpm/ft² (mm/min)*	*Ceiling Sprinkler Operating Area ft² (m²)*
Group A plastic commodities in cartons, encapsulated	5 ft to 10 ft (1.5 m to 3.1)	<5 ft (1.5 m)	<15 ft (4.6 m)	0.30 gpm/ft² (12.2 mm/min)	2000 ft² (185 m²)
		5 ft to 10 ft (1.5 m to 3.1 m)	20 ft (6.1 m)	0.45 gpm/ft² (18.3 mm/min)	
	15 ft (4.6 m)	≥5 ft (1.5 m)	22 ft (6.7 m)	0.45 gpm/ft² (18.3 mm/min)	
		≤10 ft (3.1 m)	25 ft (7.6 m)	0.60 gpm/ft² (24.5 mm/min)	
	20 ft (6.1 m)	<5 ft (1.5 m)	<25 ft (7.6 m)	0.60 gpm/ft² (24.5 mm/min)[a,b]	
		5 ft to 10 ft (1.5 m to 3.1 m)	27 ft (8.2 m)	0.60 gpm/ft² (24.5 mm/min)[a]	
	25 ft (7.6 m)	<5 ft (1.5 m)	30 ft (9.1 m)	0.8 gpm/ft² (32.6 mm/min)[c]	
		5 ft to 10 ft (1.5 m to 3.1 m)	35 ft (11 m)		

[a]Ceiling-only protection is not permitted for this storage configuration except where K-11.2 or larger spray sprinklers listed for storage use are installed.

[b]For the protection of single- and double-row rack only.

[c]Ceiling-only protection shall not be permitted for this storage configuration except where K-16.8 spray sprinklers listed for storage use are installed.

EDUFIRE.IR

DESIGNER'S CORNER [21.5.1.1]

Can the protection criteria in Table 21.5.1.1 be used to protect exposed nonexpanded plastics?

No. The only protection criteria that can be used to protect exposed plastics are those that specifically state they are to be used for exposed plastics. Paragraph 21.5.1.1 specifically states that the protection criteria are for use only with plastics in cartons.

Prior to the 2013 edition, there was some confusion in NFPA 13 regarding this subject because the language in the plastics decision tree (Figure 20.4.8) seemed to imply that everything in Section 21.5 applied to exposed nonexpanded plastics. That, however, was not the case. The intent of the plastics decision tree is to allow exposed nonexpanded plastics to be protected only with criteria that are labeled for exposed nonexpanded plastics.

In the 2013 edition, the Technical Committee on Sprinkler System Discharge added criteria for protecting exposed nonexpanded plastics to Section 21.5. At the same time, the committee modified the plastics decision tree to clarify that only the protection criteria that specifically state they are for exposed plastics can be used with exposed plastics.

For the 2016 edition, the committee changed the plastics decision tree again to recognize that protection criteria for exposed expanded plastics are not available. With these new criteria, Chapter 21 now has protection information for all combinations of exposed, cartoned, expanded, and nonexpanded plastics, but the criteria in Table 21.5.1.1 cannot be used for any type of exposed plastic. Other portions of Chapter 21 through Chapter 25 must be used to protect exposed plastic (expanded or nonexpanded).

Table 21.5.1.1 is allowed to be used only to protect rack storage of plastics in cartons. Rack storage of exposed nonexpanded plastics using CMDA design criteria can be protected in accordance with 21.5.3. At this time, rack storage of exposed expanded plastics cannot be protected using CMDA and CMSA designs in accordance with NFPA 13. The only protection requirements for rack storage of exposed expanded plastics included in NFPA 13 — Chapter 23 and Chapter 25 — use ESFR sprinklers. These requirements were developed from a test program (see C.21) completed by the Fire Protection Research Foundation (FPRF).

21.5.1.2 Linear interpolation of design densities and areas of application shall be permitted between storage heights with the same clearance to ceiling.

21.5.1.3 No interpolation between clearance to ceiling shall be permitted.

21.5.1.4 An option shall be selected from Table 21.5.1.1 given the storage height and clearance being protected.

21.5.2 For storage of Group A plastics between 5 ft and 12 ft (1.5 m and 3.7 m) in height, the installation requirements for extra hazard systems shall apply.

The requirement in 21.5.2 fills a gap in the existing installation requirements for such issues as sprinkler spacing and types of pipe that can be used. NFPA 13 contains installation criteria for light hazard, ordinary hazard, extra hazard, and high-piled storage. There are no installation criteria for low-piled storage. If the low-piled storage can be protected as miscellaneous storage, Chapter 4 instructs the user to follow the rules for ordinary hazard or extra hazard. The rules in Table 10.2.4.2.1(d) are for storage above 12 ft (3.7 m) high and should not be used for storage under 12 ft (3.7 m) high. Subsection 21.5.2 provides the user with needed sprinkler spacing and installation criteria for low-piled storage situations.

21.5.3 Exposed nonexpanded Group A plastics protected with control mode density/area sprinklers shall be protected in accordance with Table 21.5.3.

The requirements in 21.5.3 were added to the 2013 edition to provide specific guidance on the protection of exposed nonexpanded plastics. Table 21.5.3 is used in a similar manner as are the figures for cartoned plastic. Referring to the information that represents the correct combination of storage type/height and ceiling height, the user selects a protection scenario from the options available in Table 21.5.3.

It should be noted that no specific guidance is provided relative to the allowance or prohibition of interpolation between storage heights Table 21.5.3.

EDUFIRE.IR

CLOSER LOOK [21.5.4.1]

Using CMDA to Protect Group A Plastic Storage Over 25 ft (7.6 m) in Height

The term *control mode density/area sprinkler* refers to the standard spray sprinkler that has been used extensively for sprinkler protection since 1955 and that has a K-factor of 5.6 or larger. The protection criteria for this type of sprinkler are provided in terms of density (flow divided by the area of coverage of the sprinkler) and area of sprinkler operation, which taken together translate into the maximum number of sprinklers that might be expected to open in a fire event. Similar types of spray sprinklers also can be listed as control mode specific application (CMSA) sprinklers. The protection criteria for CMSA sprinklers are provided in terms of the minimum water pressure necessary at the sprinkler and a specific number of sprinklers in the design area. Protection criteria for CMSA sprinklers for rack storage of Class I through Class IV commodities greater than 25 ft (7.6 m) in height are found in Chapter 25.

TABLE 21.5.3 *Control Mode Density/Area Sprinkler Protection Criteria for Exposed Nonexpanded Group A Plastics*

Commodity	*Storage height ft (m)*	*Maximum Ceiling Height ft (m)*	*Ceiling Sprinklers Density Clearance to Ceiling Up to 10 ft gpm/ft² (mm/min)*	*Ceiling Sprinkler Operating Area ft² (m²)*
Exposed nonexpanded Group A plastic	10 ft (3.1 m)	20 ft (6.1 m)	0.80 gpm/ft² (32.6 mm/min)	2500 ft² (230 m²)

21.5.4 Control Mode Density/Area Sprinkler Protection Criteria for Rack Storage of Group A Plastic Commodities Stored Over 25 ft (7.6 m) in Height for Single-, Double-, and Multiple-Row Racks.

21.5.4.1 The protection criteria requirements for rack storage of Group A plastic commodities stored over 25 ft (7.6 m) in height protected by CMDA sprinklers shall be in accordance with Chapter 25.

21.6* Control Mode Density/Area Sprinkler Protection Criteria for Rack Storage Rubber Tires.

A.21.6 The protection criteria in Table 21.6.1(a) and Table 21.6.1(b) have been developed from fire test data. Protection requirements for other storage methods are beyond the scope of this standard at the present time. From fire testing with densities of 0.45 gpm/ft² (18.3 mm/min) and higher, there have been indications that large orifice sprinklers at greater than 50 ft² (4.6 m²) spacing produce better results than the ½ in. (15 mm) orifice sprinklers at 50 ft² (4.6 m²) spacing.

Table 21.6.1(a) is based on operation of standard sprinklers. Use of quick-response or other special sprinklers should be based on appropriate tests as approved by the authority having jurisdiction.

The current changes to Table 21.6.1(a) and Table 21.6.1(b) represent test results from rubber tire fire tests performed at the Factory Mutual Research Center.

Storage heights and configurations, or both [e.g., automated material-handling systems above 30 ft (9.1 m)], beyond those indicated in the table have not had sufficient test data developed to establish recommended criteria. Detailed engineering reviews of the protection should be conducted and approved by the authority having jurisdiction.

EDUFIRE.IR

Before deciding to use the protection criteria in Section 21.6, the user must determine whether the storage can be considered miscellaneous tire storage. The definition for *miscellaneous tire storage* in 3.3.124 differentiates it from any other type of miscellaneous storage:

> The storage of rubber tires that is incidental to the main use of the building; storage areas do not exceed 2000 ft^2 (185 m^2), and on-tread storage piles, regardless of storage method, do not exceed 25 ft (7.6 m) in the direction of the wheel holes. Acceptable storage arrangements include (a) on-floor, on-side storage up to 12 ft (3.7 m) high; (b) on-floor, on-tread storage up to 5 ft (1.5 m) high; (c) double-row or multirow fixed or portable rack storage on-side or on-tread up to 5 ft (1.5 m) high; (d) single-row fixed or portable rack storage on-side or on-tread up to 12 ft (3.7 m) high; and (e) laced tires in racks up to 5 ft (1.5 m) in height.

If the rubber tire storage meets this definition of miscellaneous tire storage, the user should follow 4.3.1.6.

The selection of protection criteria from Table 21.6.1(a) and Table 21.6.1(b) requires identification of the specific tire storage configuration to be protected. See Exhibits 3.18, 3.19, 3.22, and 3.23 for examples of different types of rubber tire storage configurations.

Where the rubber tire storage is being protected with standard spray sprinklers using density/area criteria, the user can use either Table 21.6.1(a) or Table 21.6.1(b) within the bounds of the applicable storage arrangement and storage height permitted by each. Table 21.6.1(b) is referenced in Table 21.6.1(a) for the storage of tires on palletized portable racks and fixed rack storage from 5 ft (1.5 m) to 20 ft (6.1 m) with the tires on-side or on-tread and would be limited to such applications. In most cases, Table 21.6.1(a) and Table 21.6.1(b) provide the user with one density and one area (depending on whether ordinary- or high-temperature sprinklers at the ceiling are used). In some cases, however, the design is required to include a dual design criterion. In a few cases, the user is given some choices of sprinklers only at the ceiling, sprinklers at the ceiling in conjunction with in-rack sprinklers (see Chapter 25), or sprinklers at the ceiling with high-expansion foam.

21.6.1 Ceiling Systems. Protection of rubber tire storage by ceiling-only sprinkler arrangements shall be selected from Table 21.6.1(a) or Table 21.6.1(b) or per Chapter 25 using ceiling and in-rack sprinkler arrangements.

TABLE 21.6.1(a) *Protection Criteria for Rubber Tire Storage Using Control Mode Density/Area Sprinklers*

Piling Method[d]	*Pile Height [ft (m)]*	*Sprinkler Discharge Density*[a] *[gpm/ft^2 (mm/min)]*	*Areas of Application*[a] *[ft^2(m^2)]*	
			Ordinary Temperature	*High Temperature*[a]
(1) On-floor storage	Up to 5 (1.5)	0.19 (7.7)	2000 (185)	2000 (185)
(a) Pyramid piles, on-side	Over 5 (1.5) to 12 (3.7)	0.30 (12.2)	2500 (230)	2500 (230)
(b) Other arrangements such that no horizontal channels are formed[b]	Over 12 (3.7) to 18 (5.5)	0.60 (24.5)	Not allowed	2500 (230)
(2) On-floor storage Tires, on-tread	Up to 5 (1.5)	0.19 (7.7)	2000 (185)	2000 (185)
	Over 5 (1.5) to 12 (3.7)	0.30 (12.2)	2500 (230)	2500 (230)
(3) Palletized portable rack storage On-side or on-tread	Up to 5 (1.5)	0.19 (7.7)	2000 (185)	2000 (185)
	Over 5 (1.5) to 20 (6.1)	See Table 21.6.1(b)	—	—
	Over 20 (6.1) to 30 (9.1)	0.30 (12.2) plus high-expansion foam	3000 (280)	3000 (280)

(Continues)

EDUFIRE.IR

TABLE 21.6.1(a) Continued

Piling Method[d]	Pile Height [ft (m)]	Sprinkler Discharge Density[a] [gpm/ft² (mm/min)]	Areas of Application[a] [ft²(m²)] Ordinary Temperature	Areas of Application[a] [ft²(m²)] High Temperature[a]
(4) Palletized portable rack storage, on-side	Up to 5 (1.5)	0.19 (7.7)	2000 (185)	2000 (185)
	Over 5 (1.5) to 20 (6.1)	See Table 21.6.1(b)	—	—
	Over 20 (6.1) to 25 (7.6)	0.60 (24.5) and	Not allowed	5000 (465)
		0.90 (36.7)[c] or	Not allowed	3000 (280)
		0.75 (2.8) with 1-hour fire-resistive rating of roof and ceiling assembly	Not allowed	4000 (370)
(5) Open portable rack storage, on-side or on-tread	Up to 5 (1.5)	0.19 (7.7)	2000 (185)	2000 (185)
	Over 5 (1.5) to 12 (3.7)	0.60 (24.5)	5000 (465)	3000 (280)
	Over 12 (3.7) to 20 (6.1)	0.60 (24.5) and	Not allowed	5000 (465)
		0.90 (36.7)[c] or	Not allowed	3000 (280)
		0.30 (12.2) plus high-expansion foam	3000 (280)	3000 (280)
(6) Open portable rack storage, laced	Over 12 (3.7) to 20 (6.1)	0.60 (24.5) and	Not allowed	5000 (465)
		0.90 (36.7)[c,e]	Not allowed	3000 (280)
(7) Single-, double-, and multiple-row fixed rack storage on pallets, on-side, or on-tread without shelves	Up to 5 (1.5)	0.19 (7.7)	2000 (185)	2000 (185)
	Over 5 (1.5) to 20 (6.1)	See Table 21.6.1(b) or		
		0.30 (12.2) plus high-expansion foam	3000 (280)	3000 (280)
	Over 20 (6.1) to 30 (9.1)	0.30 (12.2) plus high-expansion foam	Not allowed	3000 (280)
(8) Single-, double-, and multiple-row fixed rack storage without pallets or shelves, on-side or on-tread	Up to 5 (1.5)	0.19 (7.7)	2000 (185)	2000 (185)
	Over 5 (1.5) to 12 (3.7)	0.60 (24.5)	5000 (465)	3000 (280)
	Over 12 (3.7) to 20 (6.1)	0.60 (24.5) and	Not allowed	5000 (465)
		0.90 (36.7)[c] or	Not allowed	3000 (280)
		0.30 (12.2) plus high-expansion foam	3000 (280)	3000 (280)
	Over 20 (6.1) to 30 (9.1)	0.30 (12.2) plus high-expansion foam	Not allowed	3000 (280)

Note: Shelf storage of rubber tires shall be protected as solid rack shelving.

[a]Sprinkler discharge densities and areas of application are based on a maximum clearance to ceiling of 10 ft (3.0 m) with the maximum height of storage anticipated.

[b]Laced tires on-floor, vertical stacking on-side (typical truck tires), and off-road tires. Laced tires are not stored to a significant height by this method due to the damage inflicted on the tire (i.e., bead).

[c]Water supply shall fulfill both requirements.

[d]Shelf storage of rubber tires shall be protected as solid rack shelving.

[e]This protection scheme is for use with K-16.8 (240) or larger control mode sprinklers only. Maximum clearance to ceiling can be increased to 14 ft (4.3 m) with this scheme.

EDUFIRE.IR

TABLE 21.6.1(b) *Control Mode Density/Area Sprinklers System Density (gpm/ft²) for Palletized Portable Rack Storage and Fixed Rack Storage of Rubber Tires with Pallets Over 5 ft (1.5 m) to 20 ft (3.7 m) in Height*

	Sprinkler Temperature	
Storage Height [ft (m)]	***High Temperature***	***Ordinary Temperature***
>5 to 10 (1.5 to 3.0)	0.32/2000 (13.0/185)	0.32/2000 (13.0/185)
>10 to 12 (3.0 to 3.7)	0.39/2000 (15.9/185)	0.39/2600 (15.9/270)
>12 to 14 (3.7 to 4.3)	0.45/2000 (18.3/185)	0.45/3200 (18.3/280)
>14 to 16 (4.3 to 4.9)	0.5/2300 (20.4/215)	0.5/3700 (20.4/320)
>16 to 18 (4.9 to 5.5)	0.55/2600 (22.4/270)	0.55/4400 (22.4/380)
>18 to 20 (5.5 to 6.1)	0.6/3000 (24.5/260)	0.6/5000 (24.5/465)

21.7 Control Mode Density/Area Sprinkler Protection Criteria for Roll Paper Storage.

21.7.1 Storage of heavyweight or mediumweight classes of rolled paper up to 10 ft (3.0 m) in height shall be protected by sprinklers designed for ordinary hazard Group 2 densities.

Tests indicate that adequate protection can be provided using an ordinary hazard (Group 2) density where heavyweight and mediumweight paper are stored no higher than 10 ft (3.0 m). Lightweight paper, however, cannot be protected with ordinary hazard criteria at those same storage heights (see 21.7.2).

21.7.2 Storage of tissue and lightweight classes of paper up to 10 ft (3.0 m) in height shall be protected by sprinklers in accordance with extra hazard Group 1 densities.

Because of the rapid fire spread across the surface of paper rolls classified as lightweight or tissue and the propensity for the fire to burrow into the roll, protection criteria must be increased to extra hazard (Group 1) where the storage is 10 ft (3.0 m) high or less.

21.7.3 Sprinkler design criteria for storage of roll paper 10 ft (3.0 m) high and higher in buildings or structures with roof or ceilings up to 30 ft (9.1 m) shall be in accordance with Table 21.7.3(a) and Table 21.7.3(b).

Testing with spray sprinklers using density/area criteria was conducted to establish the discharge densities needed to control fires in heavyweight and mediumweight paper stored up to 20 ft (6.1 m) and 25 ft (7.6 m) high. See the required densities in Table 21.7.3(a) and Table 21.7.3(b).

21.7.4* High-temperature sprinklers shall be used for installations protecting roll paper stored 15 ft (4.6 m) or higher.

A.21.7.4 Generally, more sprinklers open in fires involving roll paper storage protected by sprinklers rated below the high-temperature range. An increase of 67 percent in the design area should be considered.

High-temperature sprinklers were used in all the fire tests conducted on roll paper, which provided the data for developing the density/area design criteria in Table 21.7.3(a) and Table 21.7.3(b). Those tables should be used to determine the proper protection for roll paper storage. However, 21.1.9 allows ordinary-temperature sprinklers of K-11.2 (160) or larger to be used with the high-temperature sprinkler criteria, so technically the user would be allowed to protect roll paper storage with ordinary-temperature sprinklers with K-factors of 11.2 (160) or more.

EDUFIRE.IR

TABLE 21.7.3(a) *Control Mode Density/Area Sprinkler Protection Criteria for Roll Paper Storage for Buildings or Structures with Roof or Ceilings Up to 30 ft (Discharge Densities are gpm/ft² over ft²)*

Storage Height (ft)	Ceiling (ft)	Heavyweight					Mediumweight				Tissue All Storage Arrays
		Closed Array Banded or Unbanded	Standard Array		Open Array		Closed Array Banded or Unbanded	Standard Array		Open Array Banded or Unbanded	
			Banded	Unbanded	Banded	Unbanded		Banded	Unbanded		
10	≤5	0.3/2000	0.3/2000	0.3/2000	0.3/2000	0.3/2000	0.3/2000	0.3/2000	0.3/2000	0.3/2000	0.45/2000
10	>5	0.3/2000	0.3/2000	0.3/2000	0.3/2000	0.3/2000	0.3/2000	0.3/2000	0.3/2000	0.3/2000	0.45/2500
15	≤5	0.3/2000	0.3/2000	0.3/2000	0.3/2500	0.3/3000	0.3/2000	0.3/2000	0.45/2500	0.45/2500	0.60/2000
15	>5	0.3/2000	0.3/2000	0.3/2000	0.3/3000	0.3/3500	0.3/2000	0.3/2500	0.45/3000	0.45/3000	0.60/3000
20	≤5	0.3/2000	0.3/2000	0.3/2500	0.45/3000	0.45/3500	0.3/2000	0.45/2500	0.6/2500	0.6/2500	0.75/2500
20	>5	0.3/2000	0.3/2500	0.3/3000	0.45/3500	0.45/4000	0.3/2500	0.45/3000	0.6/3000	0.6/3000	0.75/3000
25	≤5	0.45/2500	0.45/3000	0.45/3500	0.6/2500	0.6/3000	0.45/3000	0.6/3000	0.75/2500	0.75/2500	*see Note 1*

Notes:

(1) Sprinkler protection requirements for tissue stored above 20 ft have not been determined.

(2) Densities or areas, or both, shall be permitted to be interpolated between any 5 ft storage height increment.

TABLE 21.7.3(b) *Control Mode Density/Area Sprinkler Protection Criteria for the Protection of Roll Paper Storage for Buildings or Structures with Roof or Ceilings Up to 9.1 m (Discharge Densities are mm/min over m²)*

Storage Height (m)	Ceiling (m)	Heavyweight					Mediumweight				Tissue All Storage Arrays
		Closed Array Banded or Unbanded	Standard Array		Open Array		Closed Array Banded or Unbanded	Standard Array		Open Array Banded or Unbanded	
			Banded	Unbanded	Banded	Unbanded		Banded	Unbanded		
3.0	≤1.5	12.2/185	12.2/185	12.2/185	12.2/185	12.2/185	12.2/185	12.2/185	12.2/185	12.2/185	18.3/185
3.0	>1.5	12.2/185	12.2/185	12.2/185	12.2/185	12.2/185	12.2/185	12.2/185	12.2/185	12.2/185	18.3/230
4.6	≤1.5	12.2/185	12.2/185	12.2/185	12.2/230	12.2/280	12.2/185	12.2/185	18.3/230	18.3/230	24.5/185
4.6	>1.5	12.2/185	12.2/185	12.2/185	12.2/280	12.2/330	12.2/185	12.2/230	18.3/280	18.3/280	24.5/280
6.1	≤1.5	12.2/185	12.2/185	12.2/230	18.3/280	18.3/325	12.2/185	18.3/230	24.5/230	24.5/230	31.0/230
6.1	>1.5	12.2/185	12.2/185	12.2/280	18.3/230	18.3/230	12.2/230	18.3/280	24.5/280	24.5/280	30.6/280
7.6	≤1.5	18.3/230	18.3/230	18.3/230	24.5/230	24.5/280	18.3/280	24.5/280	31.0/230	31.0/230	*see Note 1*

Notes:

(1) Sprinkler protection requirements for tissue stored above 6.1 m have not been determined.

(2) Densities or areas, or both, shall be permitted to be interpolated between any 1.5 m storage height increment.

21.7.5 The protection area per sprinkler shall not exceed 100 ft² (9.3 m²) or be less than 70 ft² (6.5 m²).

Because the protection area per sprinkler used in the roll paper fire test program was 100 ft² (9.3 m²), the sprinkler spacing should not exceed that amount. The minimum sprinkler coverage area of 70 ft² (6.5 m²) exists so that the sprinklers are not positioned too close together. If sprinklers are placed too close to one another, discharge from one sprinkler can wet the next sprinkler, which might prevent that next sprinkler from opening when it might be needed to establish fire control.

EDUFIRE.IR

21.7.6 Where high-expansion foam systems are installed in heavyweight class and mediumweight class storage areas, sprinkler discharge design densities shall be permitted to be reduced to not less than 0.24 gpm/ft^2 (9.8 mm/min) with a minimum operating area of 2000 ft^2 (185 m^2).

21.7.7 Where high-expansion foam systems are installed in tissue storage areas, sprinkler discharge densities and areas of application shall not be reduced below those provided in Table 21.7.3(a) and Table 21.7.3(b).

The roll paper fire test program did not include tests using high-expansion foam. However, high-expansion foam has been demonstrated on other storage commodities to substantially reduce the demand necessary from the ceiling sprinklers to achieve fire control. Therefore, the sprinkler density can be reduced where high-expansion foam systems are installed to protect heavyweight and mediumweight rolled paper but not for rolled tissue paper.

21.8 Special Design for Rack Storage of Class I Through Class IV Commodities and Group A Plastics Stored Up to and Including 25 ft (7.6 m) in Height.

21.8.1 Slatted Shelves.

21.8.1.1* Slatted rack shelves shall be considered equivalent to solid rack shelves where the shelving is not considered open rack shelving or where the requirements of 21.8.1.2 are not met. *(See Section C.20.)*

A.21.8.1.1 Slatting of decks or walkways or the use of open grating as a substitute for automatic sprinkler thereunder is not acceptable.

In addition, where shelving of any type is employed, it is for the basic purpose of providing an intermediate support between the structural members of the rack. As a result, it becomes almost impossible to define and maintain transverse flue spaces across the rack as required.

C.20 [21.8.1.1 and 23.13.1] A full-scale test program was conducted with various double-row rack storage arrangements of a cartoned Group A nonexpanded plastic commodity at the Factory Mutual Research Corporation (FMRC) test facility. The series of nine tests included several variations, one of which involved the use of the following four distinct shelving arrangements: slatted wood, solid wood, wire mesh, and no shelving. The results of the testing program, specifically Tests 1, 2, 3, and 5, clearly demonstrate the acceptable performance of sprinkler systems protecting storage configurations that involve the use of slated shelving as described in 21.8.1.1 and 23.13.1. As a result of the test program, Factory Mutual has amended FM Loss Prevention Data Sheet 8-9 to allow slatted shelving to be protected in the same manner as an open rack arrangement.

Complete details of the test program are documented in the FMRC technical report FMRC J. I. 0X1R0.RR, "Large-Scale Fire Tests of Rack Storage Group A Plastics in Retail Operation Scenarios Protected by Extra Large Orifice (ELO) Sprinklers."

Slatted shelves can form significant obstructions to ceiling sprinkler discharge. Where the area of solid slatted shelving exceeds 20 ft^2 (1.9 m^2), slatted shelves should be treated like solid shelves, regardless of the type of sprinklers installed at the ceiling, unless the special rules of 21.8.1.2 or 21.9.1 are followed. If the slatted shelves are to be treated as solid shelves, all the rules of Section 25.6 apply, including the requirement of additional in-rack sprinklers below the slatted shelves.

EDUFIRE.IR

21.8.1.2 A wet pipe system that is designed to provide a minimum of 0.6 gpm/ft^2 (24.5 mm/min) density over a minimum area of 2000 ft^2 (185 m^2) shall be permitted to protect single-row and double-row racks with slatted rack shelving where all of the following conditions are met:

(1) Sprinklers shall be K-11.2 (160), K-14.0 (200), or K-16.8 (240) orifice spray sprinklers with a temperature rating of ordinary, intermediate, or high and shall be listed for storage occupancies.
(2) The protected commodities shall be limited to Class I through Class IV, Group B plastics, Group C plastics, cartoned (expanded and nonexpanded) Group A plastics, and exposed (nonexpanded) Group A plastics.
(3) Slats in slatted rack shelving shall be a minimum nominal 2 in. (50 mm) thick by maximum nominal 6 in. (150 mm) wide, with the slats held in place by spacers that maintain a minimum 2 in. (50 mm) opening between each slat.
(4) Where K-11.2 (160), K-14.0 (200), or K-16.8 (240) orifice sprinklers are used, there shall be no slatted shelf levels in the rack above 12 ft (3.7 m). Open rack shelving using wire mesh shall be permitted for shelf levels above 12 ft (3.7 m).
(5) Transverse flue spaces at least 3 in. (75 mm) wide shall be provided at least every 10 ft (3.0 m) horizontally.
(6) Longitudinal flue spaces at least 6 in. (150 mm) wide shall be provided for double-row racks.
(7) The aisle widths shall be at least 7½ ft (2.3 m).
(8) The maximum roof height shall be 27 ft (8.2 m).
(9) The maximum storage height shall be 20 ft (6.1 m).
(10) Solid plywood or similar materials shall not be placed on the slatted shelves so that they block the 2 in. (50 mm) spaces between slats, nor shall they be placed on wire mesh shelves.

The requirements in 21.8.1.2 are the result of full-scale fire tests simulating the retail display of commodities stored on racks with slatted shelves. Rack storage configurations used in the testing included more shelving at lower levels within the reach of consumers and larger bulk storage, usually pallet loads, on the upper layers in a more traditional configuration. The tests showed that, when all 10 conditions in 21.8.1.2 were met, in-rack sprinklers were not needed below slatted shelves. Critical to the performance of the ceiling sprinklers are item (3) of 21.8.1.2, which mandates a specific distance between slats, and items (5) and (6), which require transverse and longitudinal flue spaces. Together, these openings in the racks allow water from the ceiling sprinklers to penetrate down through the racks to control or suppress fires in the rack structure.

21.9 Sprinkler Design Criteria for Storage and Display of Class I Through Class IV Commodities, Cartoned Nonexpanded Group A Plastics and Nonexpanded Exposed Group A Plastics in Retail Stores.

Section 21.9 contains design criteria for storage configurations in seven different retail store arrangements. Each configuration matches an arrangement of a specific large national chain of stores. These configurations can protect any commodity between Class I and exposed nonexpanded Group A plastics, provided the arrangement conforms to the limitations in the option that is selected. In some cases, the options contain two density/area criteria. In those instances, two sets of hydraulic calculations might have to be performed, and the water supply should be capable of meeting each one (individually, not simultaneously). One of the density/area criteria will be at a higher density over a smaller design area to ensure that the first few sprinklers that open will discharge a larger amount of water. The other density/area criteria will be at a lower density over a larger design area to ensure that when the full design area is operating, some minimum density is still maintained. Given that all water supplies have some degree of natural slope, this type of dual design criteria tends to mimic the expected operation of a system with the first operating sprinklers producing a greater discharge than the last.

EDUFIRE.IR

21.9.1 A wet pipe system designed to meet two separate design points — 0.6 gpm/ft^2 (24.5 mm/min) density over 2000 ft^2 (185 m^2) and 0.7 gpm/ft^2 (28.5 mm/min) density for the four hydraulically most demanding sprinklers with 500 gpm (1900 L/min) hose stream allowance for a 2-hour duration — shall be permitted to protect single- and double-row slatted shelf racks when the following conditions are met:

(1) An extended coverage sprinkler with a nominal K-factor of K-25.2 (360) listed for storage occupancies shall be provided.
(2) Shelves shall be either open shelving or slatted using a 2 in. (50 mm) thick by maximum 6 in. (150 mm) wide slat held in place by spacers that maintain a minimum 2 in. (50 mm) opening between each slat.
(3) There shall be no slatted shelf levels in the rack above nominal 12 ft (3.7 m) level. Wire mesh (greater than 50 percent opening) shall be permitted for shelf levels above 12 ft (3.7 m).
(4) A single level of solid shelving 3½ ft × 8 ft 3 in. (1.1 m × 2.5 m) shall be permissible at an elevation of not more than 5 ft (1.5 m).
(5) Perforated metal (open area of 40 percent or more) shall be permitted over either the open shelving or the slatted shelves up to the 60 in. (1500 mm) level.
(6) Other than what is allowed in this section, solid plywood or similar materials shall not be placed on the slatted shelves.
(7) Solid displays shall be permissible, provided that all flues are maintained and only one display is installed per bay.
(8) Maximum roof height shall be 30 ft (9.1 m) in the protected area.
(9) Maximum storage height shall be 22 ft (6.7 m).
(10) Aisle widths shall be a minimum of 8 ft (2.4 m).
(11) Minimum transverse flue spaces of 3 in. every 10 ft (75 mm every 3.0 m) horizontally shall be provided.
(12) Minimum longitudinal flue spaces of 6 in. (150 mm) shall be provided for double-row racks.
(13) Storage in the aisle shall be permissible, provided the aisle storage is no more than 4 ft (1.2 m) high and a minimum clear aisle of 4 ft (1.2 m) is maintained.

21.9.2 A wet pipe system designed to meet two separate design points — 0.425 gpm/ft^2 (17.3 mm/min) density over 2000 ft^2 (185 m^2) and 0.50 gpm/ft^2 (20.4 mm/min) density for the four hydraulically most demanding sprinklers with 500 gpm (1900 L/min) hose stream allowance for a 2-hour duration — shall be permitted in solid steel cantilever-style retail shelving racks (gondola racks) when the following conditions are met:

(1) An extended coverage sprinkler with a nominal K-factor of K-25.2 (360) listed for storage occupancies shall be provided.
(2) The storage height shall not exceed 12 ft (3.7 m).
(3) The ceiling height shall not exceed 22 ft (6.7 m) in the protected area.
(4) Gondola rack structure shall not exceed 48 in. (1200 mm) in aggregate depth or 78 in. (1950 mm) in height.
(5) A minimum aisle of 5 ft (1.5 m) between storage shall be maintained.
(6) Rack lengths shall be no more than 70 ft (21 m).

21.9.3 A wet system designed to meet two separate design points — 0.425 gpm/ft^2 (17.3 mm/min) density over 2000 ft^2 (185 m^2) and 0.50 gpm/ft^2 (20.4 mm/min) density for the four hydraulically most demanding sprinklers with 500 gpm (1900 L/min) hose stream allowance for a 2-hour duration — shall be permitted in solid steel cantilever-style retail shelving racks (gondola racks) when the following conditions are met:

(1) An extended coverage sprinkler with a nominal K-factor of K-25.2 (360) listed for storage occupancies shall be provided.
(2) Storage height shall not exceed 15 ft (4.6 m).

EDUFIRE.IR

DESIGNER'S CORNER [21.9.1]

Many protection rules in Chapter 21, such as Section 21.9, require the user to calculate two different densities over two different areas. What is the reason for this dual requirement, and are users required to calculate the "four hydraulically most demanding sprinklers" on the same branch line?

At one time, the concept of a dual point density design was more prevalent in NFPA standards. Now that concept appears only in optional criteria in Chapter 21. The idea is to ensure that the first few sprinklers that open discharge more water. If this significant discharge does not control the fire, the discharge is allowed to decrease as additional sprinklers (beyond the first four) open up.

NFPA 13 never requires all sprinklers to be calculated on the same branch line. The user is permitted to use the rules of 27.2.4.2.1 and calculate only a number of sprinklers equal to 1.2 times the square root of the design area along the branch line. In this case, the design area is the area covered by the four most demanding sprinklers.

For example, if the four most demanding sprinklers cover 384 ft² (35.7 m²), 1.2 times the square root of the area is 23.5 ft (7.2 m). If the sprinklers are spaced 12 ft (3.7 m) apart in the direction of the branch line [with 6 ft (1.8 m) to the wall], the distance of 23.5 ft (7.2 m) will require two sprinklers, and two sprinklers will be required on each of the two branch lines. If the distance between sprinklers is 8 ft (2.4 m) along the branch line [with 4 ft (1.2 m) to the wall], the design will require three sprinklers on the most remote branch line and a fourth sprinkler on the second most remote branch line, as shown in the left illustration below.

It is possible, when multiplying the square root of the design area by 1.2, to end up calculating four sprinklers on a branch line. As an example, for the sprinkler arrangement in the right illustration below, 1.2 times the square root of the design area will be 23.5 ft (7.2 m). Starting at the wall, a distance of 23.5 ft (7.2 m) will encompass territory covered by four sprinklers. So in that case, the four sprinklers on the most remote branch line must be calculated.

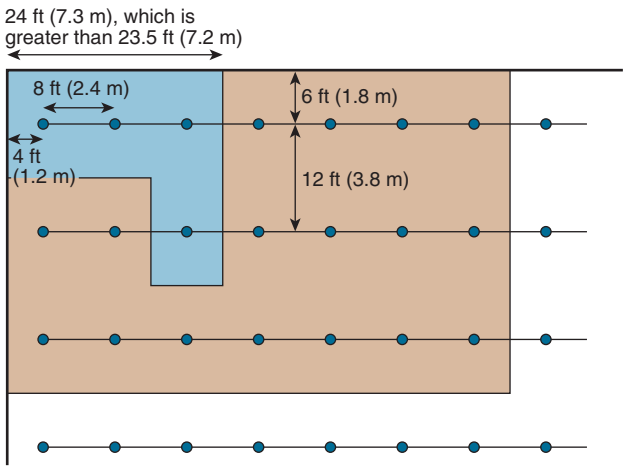

Dual-Density Design with 4 ft (1.2 m) to the Wall.

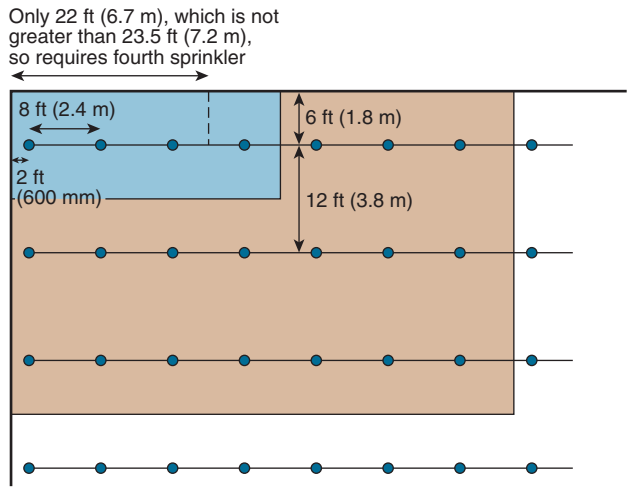

Dual-Density Design with 2 ft (600 mm) to the Wall.

Four-sprinkler design at 0.7 gpm/ft² (28.5 mm/min) density

2000 ft² (185 m²) sprinkler design at 0.6 gpm/ft² (24.5 mm/min) density

(3) Ceiling height shall not exceed 25 ft (7.6 m) in the protected area.
(4) Gondola rack structure shall not exceed 60 in. (1500 mm) in aggregate depth or 8 ft (2.4 m) in height.
(5) A perforated metal deck at the 8 ft (2.4 m) level shall be permissible with storage placed on top with or without flue spaces to a maximum height from floor of 15 ft (4.6 m).
(6) Rack lengths shall not exceed 70 ft (21 m).
(7) A minimum aisle space of 6 ft (1.8 m) shall be provided.

EDUFIRE.IR

21.9.4 A wet pipe system designed to meet two separate design points — 0.45 gpm/ft^2 (18.3 mm/min) density over 2000 ft^2 (185 m^2) and 0.55 gpm/ft^2 (22.4 mm/min) density for the four hydraulically most demanding sprinklers with 500 gpm (1900 L/min) hose stream allowance for a 2-hour duration — shall be permitted without the use of in-rack sprinklers when the following conditions are met:

(1) An extended coverage sprinkler with a nominal K-factor of K-25.2 (360) listed for storage occupancies shall be provided.
(2) Storage height shall not exceed 15 ft (4.6 m).
(3) Ceiling height shall not exceed 25 ft (7.6 m).
(4) Shelving structure shall not exceed 48 in. (1200 mm) aggregate depth or 12 ft (3.7 m) in height.
(5) Shelving shall be permitted to be made of solid particleboard.
(6) A minimum aisle space of 3 ft (900 mm) shall be maintained.
(7) Shelving length shall be a maximum of 70 ft (21 m).

21.9.5 A wet pipe system designed to meet two separate design points — 0.38 gpm/ft^2 (15.5 mm/min) density over 2000 ft^2 (185 m^2) and 0.45 gpm/ft^2 (18.3 mm/min) density for the four hydraulically most demanding sprinklers with 500 gpm (1900 L/min) hose stream allowance for a 2-hour duration — shall be permitted without the use of in-rack sprinklers in steel retail sales floor shelving racks where the following conditions are met:

(1) An extended coverage sprinkler with a nominal K-factor of K-25.2 (360) listed for storage occupancies shall be provided.
(2) Storage height shall not exceed 14 ft (4.3 m).
(3 Ceiling height shall not exceed 20 ft (6.1 m).
(4) Solid metal shelving shall be permissible up to the 72 in. (1800 mm) level and wire shelving shall be permissible up to the 10 ft (3.0 m) level.
(5) The solid metal shelving shall not exceed 66 in. (1650 mm) in aggregate depth with a 6 in. (150 mm) longitudinal flue between two 30 in. (750 mm) deep shelves.
(6) A minimum aisle space of 5 ft (1.5 m) shall be maintained.
(7) A minimum longitudinal flue of 6 in. (150 mm) shall be maintained.
(8) Rack length shall be a maximum of 70 ft (21 m).

21.9.6 A wet pipe system designed to meet two separate design points — 0.49 gpm/ft^2 (20 mm/min) density over 2000 ft^2 (185 m^2) and 0.55 gpm/ft^2 (22.4 mm/min) density for the four hydraulically most demanding sprinklers with 500 gpm (1900 L/min) hose stream allowance for a 2-hour duration — shall be permitted without the use of in-rack sprinklers in retail solid shelved steel rack structure when the following conditions are met:

(1) An extended coverage sprinkler with a nominal K-factor of K-25.2 (360) listed for storage occupancies shall be provided.
(2) Storage height shall not exceed 16.5 ft (5 m).
(3) Ceiling height shall not exceed 22 ft (6.7 m).
(4) Shelving structure shall not exceed 51 in. (1275 mm) aggregate depth or 148 in. (3700 mm) in height.
(5) The intersection of perpendicular steel racks shall be permissible as long as no storage is placed within the void space at the junction of the racks.
(6) The top shelf shall be wire mesh.
(7) A minimum aisle width of 4 ft (1.2 m) shall be maintained between shelf units and other displays.

EDUFIRE.IR

21.10* Control Mode Density/Area Sprinkler Protection Criteria for Baled Cotton Storage.

Fire tests for baled cotton storage are limited. Protection criteria are based largely on empirical data gathered over the course of several years by people in the baled cotton industry and members of the insurance community. Fires in baled cotton storage can burrow deep into the bale, which shields the fire from sprinkler discharge, making it more difficult for sprinklers to control or suppress the fires.

The cotton fiber itself contains enough entrained oxygen to sustain a fire deep within a compressed bale. Such a fire will slowly develop until it breaks out and exposes nearby bales. Flameover fires, or flashover as it is known in the baled cotton industry, can result from any number of sources burning across the surface of bales, involving areas such as exposed sample holes or fan-head bale ends, where cotton ties have come loose. Current bale-wrapping practices reduce the chance of flameover, but the possibility still exists.

Sustained application of water over large design areas is necessary, due to both the possibility of rapid fire spread and the large fuel load (Btu content) present in baled cotton storage. Recent developments in quick-response and larger orifice sprinklers should aid in control of the rapidly spreading nature of some baled cotton fires and in control of more deeply seated fires. Exhibit 21.2 provides an example of baled cotton storage.

EXHIBIT 21.2 *Baled Cotton. (Courtesy of Agriculture Guaranty, LLC)*

A.21.10 For protection of baled cotton, fire tests and actual fire experience indicate an initial low heat release; thus, sprinklers in the ordinary-temperature range should offer some advantage by opening faster than those of intermediate- or high-temperature classifications under similar conditions.

21.10.1 For tiered or rack storage up to a nominal 15 ft (4.6 m) in height, sprinkler discharge densities and areas of application shall be in accordance with Table 21.10.1.

EDUFIRE.IR

TABLE 21.10.1 *Baled Cotton Storage Up to and Including 15 ft (4.6 m)*

	Discharge Density per Area [gpm/ft² over ft² (mm/min over m²)]		
System Type	***Tiered Storage***	***Rack Storage***	***Untiered Storage***
Wet	0.25/3000 (10.2/280)	0.33/3000 (13.4/280)	0.15/3000 (6.1/280)
Dry	0.25/3900 (10.2/360)	0.33/3900 (13.4/360)	0.15/3900 (6.1/360)

The use of the tiered and untiered storage columns in Table 21.10.1 is based on the storage arrangement that meets the definition of *tiered storage* (see 3.3.219) or untiered storage (see A.3.3.219). Essentially, tiered storage is solid-piled bale storage that is two or more bales in height and untiered storage is solid-piled bale storage that is one bale high. The rack storage column in Table 21.10.1 should be used when the storage is on a rack. The additional 30 percent increase is shown for dry systems in each storage arrangement. The storage of baled cotton above a storage height of 15 ft (4.6 m) is not addressed by NFPA 13.

21.10.2 Where roof or ceiling heights would prohibit storage above a nominal 10 ft (3 m), the sprinkler discharge density shall be permitted to be reduced by 20 percent of that indicated in Table 21.10.1 but shall not be reduced to less than 0.15 gpm/ft² (6.1 mm/min).

Low roof or ceiling heights that do not permit storage above 10 ft (3.0 m) effectively limit storage of baled cotton to no more than two bales high on-end or five bales high on-side. Limited numbers of bales reduce the potential Btu content available to a fire, allowing for the indicated reduction in density.

21.11 Control Mode Density/Area Sprinkler Protection Criteria for Carton Records Storage with Catwalk Access.

Research by the records storage industry led to the addition of the special criteria in Section 21.11. If the storage racks are limited as discussed in this section, protection of the cartoned records can be achieved with a combination of ceiling sprinklers, in-rack sprinklers (see Chapter 25), and additional sprinklers centered in the catwalks. The use of this protection scheme is limited to the protection of carton records storage, as defined by 3.3.21, which predominantly includes paper records in cardboard cartons with a limited amount of plastic material.

21.11.1 Carton records storage shall be permitted to be protected in accordance with the succeeding subsections of Section 21.11.

21.11.2 Carton records storage shall be permitted to be supported on shelving that is a minimum of 50 percent open from approved flue space to approved flue space.

21.11.2.1 Transverse flue spaces of a nominal 6 in. (150 mm) width shall be located at each rack upright.

The transverse flue spaces are required only at the rack uprights. The transverse flues normally found between rack uprights in other types of rack storage are not required when Section 21.11 is being followed. Full-scale fire testing showed that when the racks described here are used and combined with in-rack sprinklers staggered at the rack uprights in the transverse flues and additional sprinklers under the catwalks, adequate fire control can be provided.

21.11.2.2 Rack uprights shall be installed on a maximum of 10 ft 6 in. (3.2 m) centers.

21.11.2.3 Longitudinal flues shall not be required.

EDUFIRE.IR

21.11.3 The storage rack structure for carton records storage shall consist of either of the following:

(1) A single-row rack not greater than 72 in. (1800 mm) deep
(2) Double-row racks having a total depth of not greater than 102 in. (2550 mm) aisle to aisle

21.11.3.1 Each storage rack shall be separated from other storage racks by aisles that are not less than 30 in. (750 mm) and not more than 36 in. (900 mm) in width.

21.11.3.2 Aisles used for ingress and egress shall be permitted to be up to 44 in. (1100 mm) wide when solid decking is used.

21.11.4 Catwalk aisles between racks shall be constructed of open metal grating that is at least 50 percent open.

21.11.4.1 Catwalk aisles at the ends of racks shall be permitted to be constructed of solid materials.

21.11.5 Catwalks shall be installed at a maximum of 12 ft (3.7 m) apart vertically.

21.11.6 Sprinkler Criteria.

C.25 [21.11.6] In July and August of 2007, a series of three large-scale fire tests were conducted at Southwest Research Institute to investigate the effectiveness of a specific ceiling and in-rack sprinkler protection scheme dedicated for the protection of paper files in 12 in. (300 mm) wide, and 16 in. (400 mm) and 10 in. (250 mm) high corrugated cardboard boxes (containers) maintained in multiple-row racks to a nominal height of 37 ft (11 m).

The storage rack for the main array in all three tests consisted of two 50 in. (1250 mm) deep racks placed back-to-back and separated by a 2 in. (50 mm) gap. The storage rack for the target array in all three tests consisted of a single 50 in. (1250 mm) deep rack separated on both sides of the main array by a 30 in. (750 mm) wide aisle. Rack uprights were a nominal 3 in. (75 mm) wide. Rack bays were 120 in. (3000 mm) wide, 38 in. (950 mm) high, and equipped with perforated metal decking having a minimum of 50 percent openings. Each storage bay was provided with 9 containers between uprights that was 3 containers deep and 3 containers high for a total of 81 containers per rack bay. Nominal 6 in. (150 mm) wide transverse flue spaces were provided at each rack upright. Both the main array and the target array were 4 bays long for an overall length of 41 ft 3 in. (13 m).

Open-grated (expanded) catwalks were provided in both storage aisles at the top of the third [9 ft 8 in. (2.9 m)], sixth [19 ft 2 in. (5.8 m)], and ninth [28 ft 8 in. (8.7 m)] tier levels.

The ceiling sprinkler system consisted of K-8.0 (115), 165°F (74°C) nominally rated, standard-response pendent automatic sprinklers installed on 10 ft × 10 ft (3.0 m × 3.0 m) spacing arranged to provide a constant 0.30 gpm/ft^2 (12.2 mm/min) density. A nominal 3 ft (900 mm) clearance was provided between the top of storage and the ceiling sprinklers.

The in-rack sprinkler system consisted of K-8.0 (115), 165°F (74°C) nominally rated, quick-response upright automatic sprinklers that were equipped with water shields and arranged to provide a constant 30 gpm (115 L/min) flow from each operating in-rack sprinkler. In-rack sprinklers were provided within the transverse flue spaces of the main array, 2 ft (600 mm) horizontally from the face of the rack, at the top of the third and ninth tier levels on one side of the main array and at the top of the sixth tier level on the other side of the main array. A minimum 6 in. (150 mm) vertical clearance was provided between the in-rack sprinkler and the top of storage within the storage rack.

The same type of sprinklers installed within the storage racks were also installed under each catwalk and designed to provide a constant 30 gpm (115 L/min) flow from each operating sprinkler. These sprinklers were centered within the aisles and installed 10 ft 3 in. (3.1 m)

EDUFIRE.IR

on line. They were arranged to be aligned with the adjacent transverse flue space when the flue space was not equipped with an in-rack sprinkler; they were positioned halfway between transverse flue spaces when the adjacent flue spaces were equipped with in-rack sprinklers.

In Test No. 1, ignition was at grade level, at the face of the rack and centered between rack uprights. The in-rack sprinklers within the transverse flue spaces nearest to the ignition location were at the top of the sixth tier level; the sprinkler under the catwalk at the top of the sixth tier level was located a horizontal distance of 15 in. (375 mm) away from the ignition location. The sprinkler under the catwalk at the top of the sixth tier level was the first sprinkler to operate at a time 2 minutes and 49 seconds after ignition. A total of 3 in-rack sprinklers and 1 catwalk sprinkler operated during this test; no ceiling-level sprinklers operated. The results of the test were considered acceptable.

In Test No. 2, ignition was at grade level at a rack upright, 2 ft (600 mm) horizontally from the rack face. The in-rack sprinkler within the transverse flue space of fire origin was at the top of the sixth tier level. The in-rack sprinkler directly over the ignition location was the first sprinkler to operate at a time 2 minutes and 9 seconds after ignition. A total of 2 in-rack sprinklers operated during this test; no ceiling-level sprinklers operated. The results of the test were considered acceptable.

In Test No. 3, ignition was at grade level, centered between rack uprights within the 2 in. (50 mm) gap. To allow vertical fire growth directly above the point of ignition, the gap was maintained open throughout the height of the storage rack. A total of 4 in-rack sprinklers and 1 sprinkler under a catwalk operated during the test; no ceiling-level sprinklers operated. The first in-rack sprinkler to operate was located at the top of the sixth tier level at a time 3 minutes and 1 second after ignition. The second in-rack sprinkler to operate was also at the top of the sixth tier level. The last 2 in-rack sprinklers to operate were both located at the top of the third tier level. The fifth and final sprinkler to operate was a sprinkler located under a catwalk at the top of the third tier level. The results of the test were considered acceptable.

All three tests were considered successful and confirmed that the ceiling and in-rack sprinkler protection scheme outlined in this standard for the protection of cartoned records storage maintained in multiple-row racks with catwalk access is acceptable.

21.11.6.1 Cartoned record storage in racks with access utilizing catwalks shall be protected in accordance with this subsection.

21.11.6.2 The design criteria for the ceiling sprinkler system shall be in accordance with Table 21.11.6.2.

TABLE 21.11.6.2 *Ceiling Sprinkler Design Criteria for Carton Record Storage*

	Up to 25 ft (7.6 m) High Storage		***Over 25 ft (7.6 m) High Storage***	
	Ordinary Temperature	***High Temperature***	***Ordinary Temperature***	***High Temperature***
Density				
gpm/ft^2	0.33	0.29	0.3	0.4
mm/min	13.4	11.8	12.2	16.3
Area				
ft^2	2000	2000	2000	2000
m^2	185	185	185	185
Hose Allowance				
gpm	500	500	500	500
L/min	1900	1900	1900	1900
Duration				
hours	2	2	2	2

EDUFIRE.IR

21.11.6.2.1 Ceiling sprinklers spaced to cover a maximum of 100 ft^2 (9 m^2) shall be standard-response spray sprinklers with K-factors in accordance with Section 21.1.

21.11.6.3 Intermediate-level sprinklers shall be installed at each catwalk level in accordance with 21.11.6.3.1 through 21.11.6.3.4 and shall be quick-response, ordinary temperature, nominal K-5.6 (80), K-8.0 (115), or K-11.2 (160).

21.11.6.3.1 Intermediate-level sprinklers shall be installed in the center ±4 in. (100 mm) of each aisle below each catwalk level.

21.11.6.3.2 Intermediate-level sprinklers shall be installed a minimum 6 in. (150 mm) above the top of storage.

21.11.6.3.3 Sprinklers shall be supplied from the in-rack sprinkler system.

21.11.6.3.4 Spacing of sprinklers within the aisles shall be located so as to align with the transverse flues and the center of the storage unit when staggered and shall not exceed 10 ft 6 in. (3.2 m) on center.

21.11.6.3.5* Sprinklers installed below each catwalk level shall be staggered vertically and horizontally. *[See Figure A.21.11.6.3.5(a) and Figure A.21.11.6.3.5(b).]*

A.21.11.6.3.5 Figure A.21.11.6.3.5(a) through Figure A.21.11.6.3.5(c) illustrate a typical rack layout for carton records storage showing the design and installation of in-rack sprinklers underneath the catwalks and in the transverse flues.

21.11.6.4 Sprinklers shall be provided in transverse flue spaces in accordance with 21.11.6.4.1 through 21.11.6.4.3.1 and Figure 21.11.6.4.

FIGURE A.21.11.6.3.5(a) *Typical Carton Record Storage Sprinkler Installation.*

EDUFIRE.IR

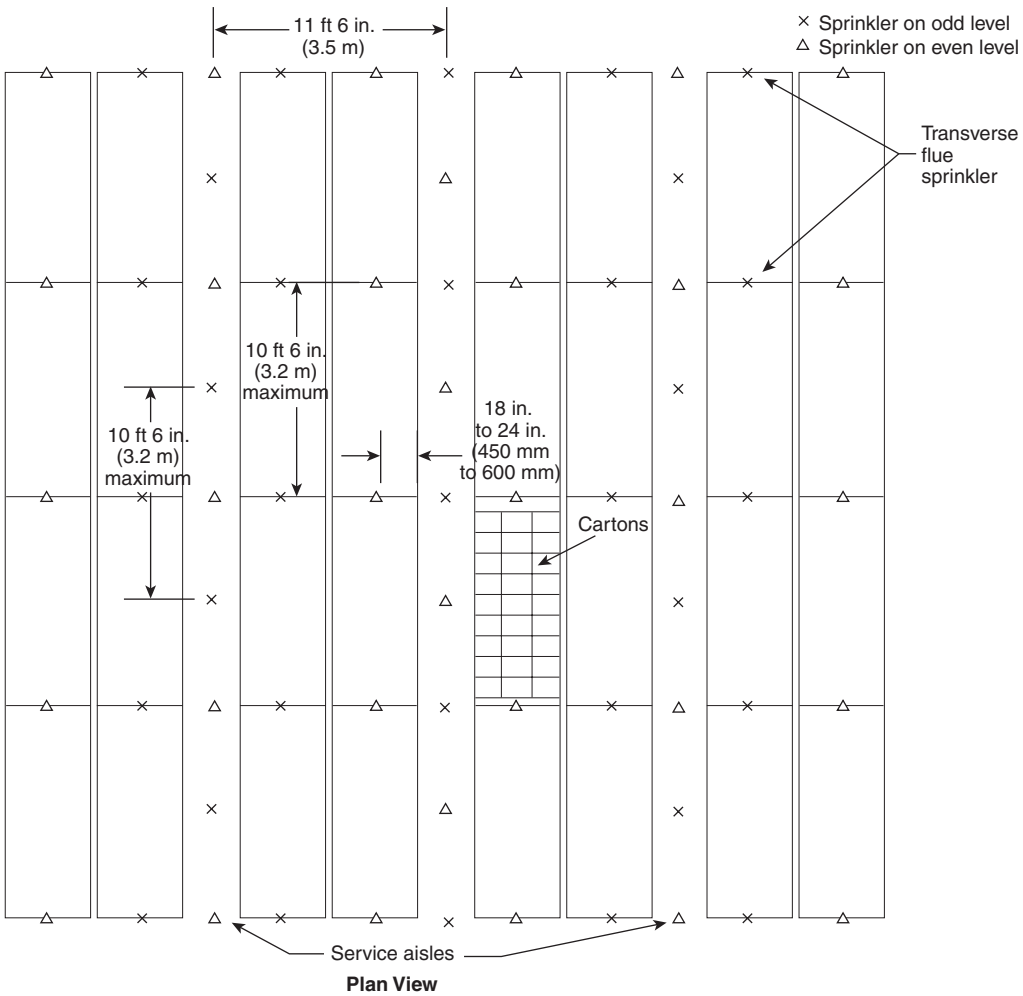

FIGURE A.21.11.6.3.5(b) *Plan View of Sprinkler Locations in Carton Record Storage.*

21.11.6.4.1 For double- and multiple-row racks, in-rack sprinklers shall be installed in the transverse flues at each catwalk level and shall be staggered vertically. For single-row racks, in-rack sprinklers shall be installed in the transverse flue at each catwalk level.

21.11.6.4.2 For double- and multiple-row racks sprinklers installed in the transverse flues shall be located not less than 18 in. (450 mm) but not greater than 24 in. (600 mm) from the face of the rack on the catwalk side.

21.11.6.4.3 For single-row racks, sprinklers installed in the transverse flues shall be staggered horizontally such that the sprinkler at first level is not less than 18 in. (450 mm) but not greater than 24 in. (600 mm) from the face of the rack on the catwalk side.

21.11.6.4.3.1 At the next level the sprinkler in the transverse flue shall be located not less than 6 in. (150 mm) but not greater than 12 in. (300 mm) from the back face of the rack. This staggering shall be repeated throughout all catwalk levels.

21.11.6.4.4 In-rack sprinklers shall be installed a minimum 6 in. (150 mm) above the top of storage.

EDUFIRE.IR

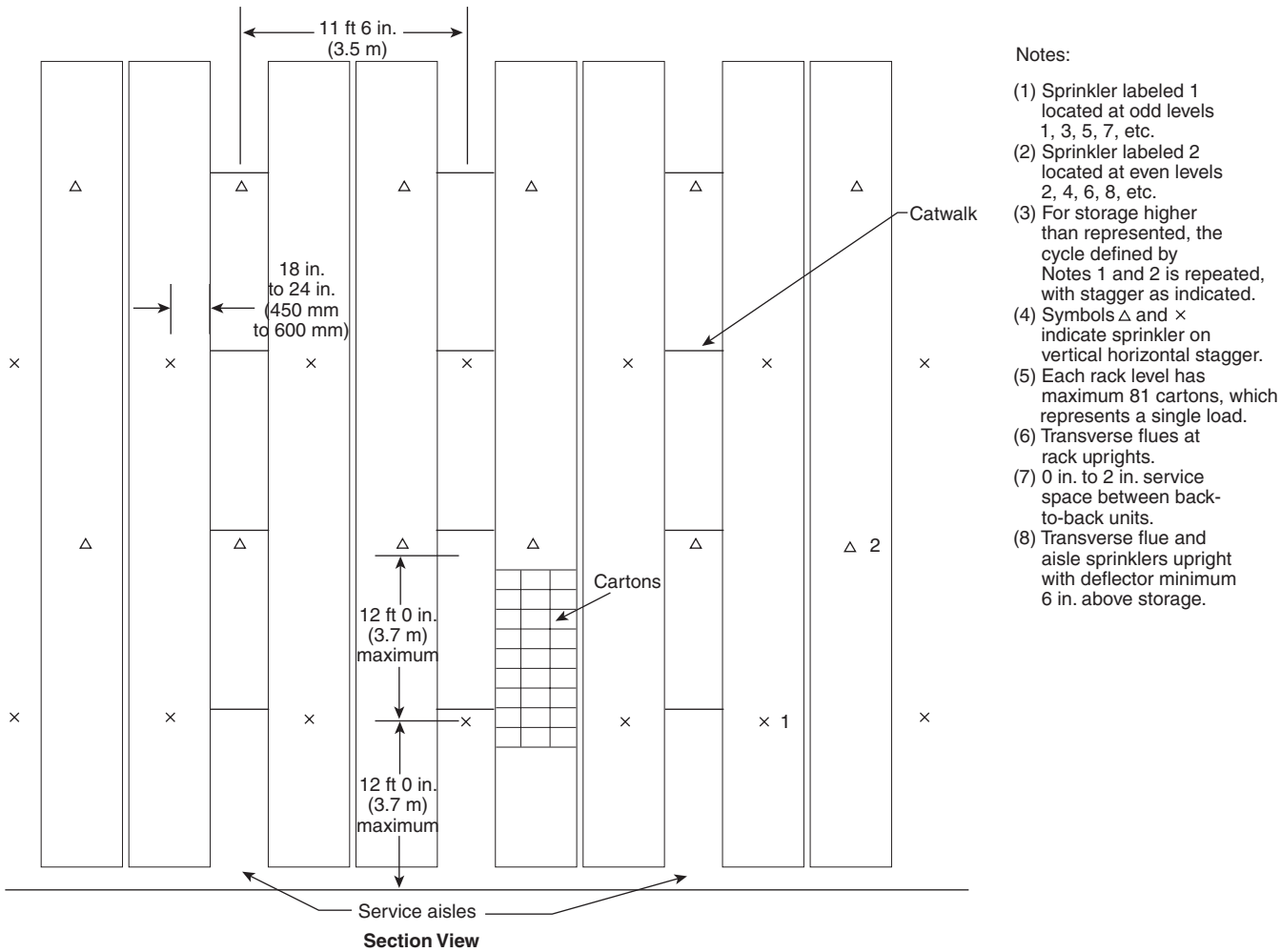

FIGURE A.21.11.6.3.5(c) *Section View of Sprinkler Locations in Carton Record Storage.*

21.11.6.4.5 Transverse flue sprinklers shall be quick-response, ordinary temperature, nominal K-5.6 (80), K-8.0 (115), or K-11.2 (160) and installed in accordance with Figure A.21.11.6.3.5(a) and Figure A.21.11.6.3.5(b).

21.11.6.5 For multiple-level catwalk systems, a minimum of 10 sprinklers, five on each of the top two levels, shall be calculated with a minimum flow rate of 30 gpm (115 L/min) per sprinkler. Calculated sprinklers shall be the hydraulically most demanding on each level.

21.11.6.5.1 For single-level catwalks, a minimum of six sprinklers shall be calculated with a minimum flow rate at 30 gpm (115 L/min) per sprinkler. Calculated sprinklers shall be the hydraulically most demanding.

21.11.6.5.2 The in-rack sprinkler system shall be balanced in with the ceiling system.

EDUFIRE.IR

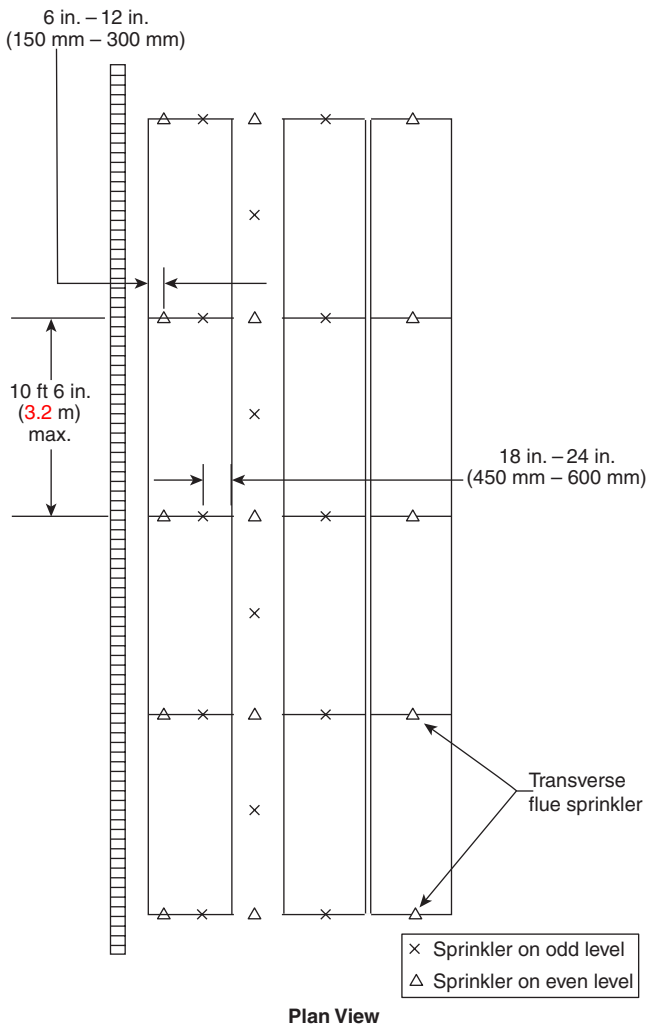

FIGURE 21.11.6.4 *Sprinkler Location and Spacing in Transverse Flues.*

21.12 Control Mode Density/Area Sprinkler Protection Criteria for Compact Storage of Commodities Consisting of Paper Files, Magazines, Books, and Similar Documents in Folders and Miscellaneous Supplies with No More Than 5 Percent Plastics Up to 8 ft (2.4 m) High.

The intent of Section 21.12 is to provide criteria for the use of compact mobile shelving up to 8 ft (2.4 m) high in light hazard design applications, with specific limitations to shelf design and commodity. This kind of storage is typical in doctors' offices, dentists' offices, and other occupancies ordinarily protected as light hazard. As a result, it was important to find the situation for which these units could be treated as light hazard. Exhibit 21.3 shows an example of this type of storage arrangement.

EDUFIRE.IR

EXHIBIT 21.3 *Compact Mobile Shelving Unit. (Courtesy of Spacesaver Corporation)*

The requirements in Section 21.12 are based on the report *Supporting Data Needs for NFPA Automatic Sprinkler Committees Research Project — Sprinkler Design Criteria for the Protection of Compact Mobile Shelving Systems*, published by the Fire Protection Research Foundation. According to the report, testing demonstrated that a light hazard design could adequately protect the commodity and shelving arrangements in Section 21.12 primarily because the storage array tends to limit the amount of oxygen available to the fire and confines the spread of fire inside the unit. If the compact storage does not comply with the limitations in Section 21.12, the light hazard rules cannot be used. Some higher criteria would have to be used as worked out with the authority having jurisdiction on a case-by-case basis.

ASK THE AHJ

Can the design criteria in Section 21.12 be applied to record storage racks or library stacks where the stacks are fixed and have clearances to sprinklers of less than 18 in. (450 mm)?

No. Such areas should be protected using the requirements of 9.3.7 and using an ordinary hazard (Group 2) occupancy classification per A.4.3.4.

C.24 [21.12] A series of fire tests were conducted by Spacesaver Corporation that indicated control was achieved with light hazard sprinkler spacing and design. The tests used quick-response, ordinary-temperature sprinklers on 15 ft × 15 ft (4.6 m × 4.6 m) spacing with an 8 ft (2.4 m) high compact storage unit located in the middle of the sprinkler array. Results indicated a classic definition of control, the fire was held in check within the compact storage module and the fire did not jump the aisle or ignite any of the target arrays.

21.12.1* Compact storage modules up to 8 ft (2.4 m) high storing commodities consisting of paper files, magazines, books, and similar documents in folders and miscellaneous supplies with no more than 5 percent plastics shall be permitted to be classified as light hazard.

EDUFIRE.IR

A.21.12.1 NFPA 13 contains protection criteria for limited configurations of compact mobile storage units and materials stored. Storage arrangements not specifically addressed in NFPA 13 are outside the scope of the standard (i.e., protection for commodities other than paper files, magazines, or books in compact mobile storage units does not simply follow high-piled storage protection criteria for shelves or racks). Where compact mobile storage configurations outside the scope of NFPA 13 are to be utilized, they must be addressed on a case-by-case basis with consideration given to the fact that no known sprinkler protection criteria is currently available. Additional protection features, such as rated construction, barriers within the storage, consideration for safe locating away from vulnerable areas, and methods for control or exhausting of the smoke, should be considered.

21.12.2 The top of the compact storage module shall be at least 18 in. (450 mm) below the sprinkler deflector.

A minimum clearance requirement for compact storage is in the standard because fire tests were conducted with an 18 in. (450 mm) clearance from the top of the storage to the sprinkler. The compact storage industry was given an opportunity to perform testing with less than 18 in. (450 mm) clearance to help determine acceptable criteria, since this clearance is frequently a problem. However, industry representatives to the research project did not support performing tests with lower clearances because they assumed that modules sold for storage arrays would always provide the 18 in. (450 mm) clearance.

21.12.3 Sprinklers shall be ordinary temperature, quick-response, standard spray upright or pendent.

21.12.4 The compact storage module shall be provided with minimum solid steel 24 gauge (0.63 mm) metal longitudinal barriers installed every third carriage.

21.12.5* Solid 24 gauge (0.63 mm) metal transverse barriers shall be spaced not more than 4 ft (1.2 m) apart.

A.21.12.5 Steel barriers that are shown to have equivalent resistance to passage of flames and heat transfer in fire tests as solid 24 gauge steel barriers are permitted.

21.12.6 Compact storage module sizes shall not exceed 250 ft^2 (23 m^2).

21.12.6.1 The size of a module shall be defined as the area of compact storage bound by the length of the carriages times the distance between longitudinal barriers or to the outward edge of a fixed storage unit in the module, including the width of the aisle in the module.

21.12.6.2 The lengths of the carriages shall be measured to the end of the carriages enclosed by solid metal transverse panels and separated by a minimum 28 in. (700 mm) aisle to a storage unit perpendicular to the carriage.

References Cited in Commentary

Fire Protection Research Foundation, 1 Batterymarch Park, Quincy, MA 02169-7471.
Supporting Data Needs for NFPA Automatic Sprinkler Committees Research Project — Sprinkler Design Criteria for the Protection of Compact Mobile Shelving Systems, January 2007.

EDUFIRE.IR

EDUFIRE.IR

CHAPTER

22

CMSA Requirements for Storage Applications

REORGANIZATION NOTE

The new Chapter 22 consolidates all control mode specific application (CMSA) sprinkler criteria into one chapter. All charts, curves, and tables relative to CMSA sprinklers are now in one location and are not intermixed with other sprinkler technologies.

This chapter addresses design concepts without the use of in-rack sprinklers or any references thereof. All the in-rack design concepts have been moved to Chapter 25. The user is encouraged to examine Chapter 22 first for a design regarding the protection of the commodities without in-rack sprinklers. If the user is unable to find a concept in this chapter, Chapter 25 should be consulted for additional design concepts using in-rack sprinklers.

22.1 General.

The criteria in Chapter 20 shall apply to storage protected with CMSA sprinklers.

22.1.1 Quick-response CMSA sprinklers designed to meet any criteria in Chapter 20 through Chapter 25 shall be permitted to protect any of the following:

(1) Light hazard occupancies
(2) Ordinary hazard occupancies

ASK THE AHJ

A few of the recent projects reviewed propose CMSA sprinklers. What are CMSA sprinklers?

Typical upright and pendent spray sprinklers are control mode sprinklers intended to keep a fire in control or from growing in size until the fire department arrives. CMSA sprinklers are characterized by large-droplet size and are listed for specific storage arrangements. Although the technology is not new, the CMSA acronym and terminology were not introduced into NFPA 13 until the 2010 edition. Prior to that, these types of sprinklers were commonly referred to as large-drop sprinklers.

22.1.2 Standard-response CMSA sprinklers designed to meet any criteria in Chapter 20 through Chapter 25 shall be permitted to protect ordinary hazard occupancies.

22.1.3 When using CMSA, the design area shall meet the requirements of 27.2.4.3.1.

The commentary following 21.1.10.3 is also true for CMSA sprinklers, which do not have density/area criteria but still need to account for the problem of a reasonable worst-case skew to the design area. By referencing 27.2.4.3.1 for CMSA sprinklers, NFPA 13 is referring the user to the requirement that the design area must be skewed at least 20 percent in the direction of the branch lines. Despite this guidance, CMSA

FAQ [22.1.1]

Can CMSA sprinklers protect light and ordinary hazard occupancies?

CMSA sprinklers can protect light and ordinary hazard occupancies, but only those listed as quick-response sprinklers can protect light hazard occupancies. The justification for the use of CMSA sprinklers for protecting light and ordinary hazard occupancies is similar to the discussion for early suppression fast-response (ESFR) sprinklers (see the commentary for 23.1.1). The requirement that CMSA sprinklers be the quick-response type ensures that the installation is consistent with the requirement in 9.4.3.1 that all new light hazard occupancies be protected with quick-response sprinklers.

SEE ALSO

3.3.205 for more information on sprinkler types and characteristics, including CMSA.

EDUFIRE.IR

sprinklers do not have a design area in terms of square feet (square meters) of which the user can take the square root for these calculations.

The requirement in 27.2.4.2.1 solves this problem by permitting the user to calculate a design area by taking the number of CMSA sprinklers in the design area and multiplying by the maximum protection area allowed by the CMSA sprinkler. The resulting number is the de facto design area. The user can then take the square root of that number to complete the calculation. For example, if Table 22.2 permits CMSA sprinklers to protect a certain storage arrangement with 15 sprinklers at 25 psi (1.7 bar), and if Table 13.2.5.2.1 permits 130 ft^2 (12 m^2) maximum spacing for those sprinklers, then the true design area is 1950 ft^2 (180 m^2). The design area would need to include the sprinklers parallel to the branch line covering a distance of 53 ft (16 m), which is 1.2 times the square root of 1950. If the sprinklers were spaced uniformly 12 ft (3.7 m) apart, five sprinklers would be needed in the design area in the direction parallel to the branch lines (53/12 = 4.4, rounded up to 5). With a total of 15 sprinklers in the design area, this particular sprinkler system would have five sprinklers on three branch lines for a design area.

22.1.4 Protection shall be provided as specified in this chapter or appropriate NFPA standards in terms of minimum operating pressure and the number of sprinklers to be included in the design area.

The number of sprinklers in the design area is provided in Table 22.2; however, the user is not given the arrangement (number of sprinklers to calculate on a branch line) for the design area in the table. To get that information, the user should go to 27.2.4.3 and calculate the design area by multiplying the number of sprinklers from Table 22.2 by the maximum allowable area of coverage per sprinkler from Table 13.2.5.2.1. Then, the number of sprinklers on the branch line is calculated by multiplying the square root of the calculated design area by 1.2.

For example, consider palletized storage of Class IV commodities stored 25 ft (7.6 m) high in a 30 ft (9.1 m) high building with noncombustible unobstructed ceiling construction being protected with a wet pipe sprinkler system using upright K-16.8 CMSA sprinklers. Table 22.2 would require 15 sprinklers in the design area, and Table 13.2.5.2.1 would allow 130 ft^2 (12 m^2) per sprinkler. Multiplying those two numbers yields an effective design area of 1950 ft^2 (180 m^2). Paragraph 27.2.4.3 instructs the user to multiply the square root of the effective design area by 1.2 to get the distance of the design area parallel to the branch line. In this case, that would be 53 ft (16 m). If the sprinklers are installed with 10 ft (3 m) between each sprinkler on the branch line, it would take six sprinklers to cover 53 ft (16 m). Therefore, six sprinklers would be needed on the most remote branch line, six sprinklers would be needed on the second most remote branch line, and three sprinklers would be needed on the third most remote branch line to make up the 15-sprinkler design area required by Table 22.2.

If the space were being used for rack storage of the same type and height of commodity storage, the allowable area per sprinkler from Table 13.2.5.2.1 would be 100 ft^2 (9 m^2) with an effective design area of 1500 ft^2 (140 m^2) and a design area length of 46.5 ft (14 m). With the sprinklers again spaced at 10 ft (3 m) along the branch line, it would require only five sprinklers to cover the required 46.5 ft (14 m). The 15-sprinkler design area would require five sprinklers on each of the three lines. For maximum design and usage flexibility of the space, it might be advisable to use the more conservative design application with the larger number of sprinklers along the branch line.

22.1.5 Open Wood Joist Construction.

22.1.5.1 Where CMSA sprinklers are installed under open wood joist construction, one of the following shall be provided:

(1) A minimum pressure of 50 psi (3.4 bar) for K-11.2 (160) sprinklers
(2) A minimum pressure of 22 psi (1.5 bar) for K-16.8 (240) sprinklers
(3) The pressure from Table 22.4 for K-19.6 (280) or larger sprinkler.
(4) The pressure from Table 22.4 for K-11.2 (160) or K-16.8 (240) where each joist channel is fully separated with material equal to the joist material to its full depth at intervals not exceeding 20 ft (6.1 m).

Per 13.2.7.1.2(2), CMSA sprinklers are permitted to be installed under wood joist construction with the sprinklers 1 in. to 6 in. (25 mm to 150 mm) below the bottom of the joists, provided that the sprinkler

EDUFIRE.IR

deflector is not more than 22 in. (550 mm) below the deck. However, when CMSA sprinklers are installed below wood joists, a specific minimum pressure at the sprinkler in accordance with 22.1.5.1 must be provided. The provisions of 22.1.5.1 would only allow the use of the K-11.2 (160) CMSA sprinkler at 50 psi (3.4 bar) and the K-16.8 (240) CMSA sprinkler at 22 psi (1.5 bar) beneath open wood joist construction, thereby prohibiting the use of the K-19.6 (280) CMSA sprinkler at any pressure. The limits in storage and ceiling/roof height allowed for those two sprinklers also must be met. This would effectively limit the height of storage to not more than 25 ft (7.6 m) under a 30 ft (9.1 m) deck since the only protection allowed above that height would be with the K-19.6 (280) CMSA sprinkler.

22.1.5.2 Preaction Systems.

22.1.5.2.1 For the purpose of using Table 22.2, preaction systems shall be classified as dry pipe systems.

Table 22.2 contains discharge criteria for only wet pipe systems and dry pipe systems. Preaction systems are allowed to be installed with CMSA sprinklers. Where a preaction system is installed, it must follow the discharge criteria for dry pipe systems. However, that does not make a preaction system a dry pipe system from the design and installation perspective. The requirement simply provides a mechanism in this chapter to establish the design discharge criteria for a preaction system. Note that the installation requirements of Section 8.3, not the rules of Section 8.2, apply to such preaction systems.

22.1.5.3 Building steel shall not require special protection where Table 22.2 are applied as appropriate for the storage configuration.

Chapter 22 does not contain any requirements mandating the protection of building steel for any storage warehouse being protected by a sprinkler system designed for storage arrangements governed in this chapter. Section 20.15 requires protection for structural steel in buildings containing rack storage of Class I through Class IV commodities under certain circumstances, but no such corresponding section exists in Chapter 22.

22.1.5.4* Storage Conditions. The design of the sprinkler system shall be based on those conditions that routinely or periodically exist in a building and create the greatest water demand, which include the following:

(1) Pile height
(2) Clearance to ceiling
(3) Pile stability
(4) Array

A.22.1.5.4 An evaluation for each field situation should be made to determine the worst applicable height–clearance to ceiling relationship that can be expected to appear in a particular case. Fire tests have shown that considerably greater demands occur where the clearance to ceiling is 10 ft (3.0 m) as compared to 3 ft (900 mm) and where a pile is stable as compared to an unstable pile. Since a system is designed for a particular clearance to ceiling, the system could be inadequate when significant areas do not have piling to the design height and larger clearances to ceiling. This can also be true where the packaging or arrangement is changed so that stable piling is created where unstable piling existed. Recognition of these conditions is essential to avoid installation of protection that is inadequate or becomes inadequate because of changes.

No tests were conducted simulating a peaked roof configuration. However, it is expected that the principles of Chapter 20 still apply. The worst applicable height–clearance to ceiling relationship that can be expected to occur should be found, and protection should be designed for it. If storage is all at the same height, the worst height–clearance to ceiling relationship creating the greatest water demand would occur under the peak. If commodities are stored higher under the peak, the various height–clearance to ceiling relationships should be tried and the one creating the greatest water demand used for designing protection.

The fire protection system has to be designed with the worst-case combination of variables to make sure that the owner is protected. If the owner is going to use some closed array and some open array storage,

EDUFIRE.IR

then the open array, being the worst-case arrangement due to the large flue spaces between piles, must be the subject of the design. Likewise, if the piles are going to be considered stable at times and unstable at other times, then the worst case of the stable piles should be taken into account in the design of the sprinkler system.

22.1.6* The ceiling design criteria for single-, double-, and multiple-row racks in Chapter 22 shall be based on open rack configurations as defined in 3.3.140.

A.22.1.6 Solid shelf racks as defined in 3.3.198 or obstructions resulting in solid shelf requirements could require additional in-rack sprinklers that could affect the ceiling design requirements.

See the commentary to 25.6.3.1 for more details on solid shelving.

22.1.7 CMSA sprinklers shall not be permitted to protect storage on solid shelf racks unless the solid shelf racks are protected with in-rack sprinklers in accordance with Chapter 25.

22.1.8 Protection criteria for Group A plastics shall be permitted for the protection of the same storage height and configuration of Class I, II, III, and IV commodities.

22.2 Palletized and Solid-Piled Storage of Class I Through Class IV Commodities.

Protection of palletized and solid-piled storage of Class I through Class IV commodities shall be in accordance with Table 22.2.

CMSA sprinklers are permitted to protect only solid-piled and palletized storage arrangements. Bin box and shelf storage must be protected with spray sprinklers in accordance with the density/area criteria in Section 21.2.

The design criteria in Table 22.2 must be selected based on the variables in the first six main columns of the table: configuration, commodity class, maximum storage height, maximum ceiling/roof height, K-factor/orientation, and type of system. Once the configuration and the commodity have been identified, the user selects the maximum storage height, which would include the proposed storage height for the facility and checks to see if the proposed ceiling/roof deck height is within the allowable maximum permitted for that selection. If it is not, a higher ceiling/roof height selection must be made that is within the maximum allowed. The available sprinkler options can then be identified. It should be noted that not all the options include criteria for both wet and dry systems and that some selections include multiple design options for wet systems.

22.3 Palletized and Solid-Piled Storage of Nonexpanded and Expanded Group A Plastic Commodities.

Protection of palletized and solid-piled storage of nonexpanded and expanded Group A plastic commodities shall be in accordance with Table 22.3.

CMSA sprinklers are currently allowed to protect only solid-piled and palletized storage arrangements. Bin box and shelf storage must be protected with spray sprinklers in accordance with the density/area criteria in Section 21.3.

The design criteria in Table 22.3 must be selected based on the variables in the first six main columns of the table: storage arrangement, commodity class, maximum storage height, maximum ceiling/roof height, K-factor/orientation, and type of system. Once the configuration and the commodity have been identified, the user then selects the maximum storage height, which would include the proposed storage

EDUFIRE.IR

TABLE 22.2 *CMSA Sprinkler Design Criteria for Palletized and Solid-Piled Storage of Class I Through Class IV Commodities (Encapsulated and Nonencapsulated)*

Configuration	Commodity Class	Maximum Storage Height		Maximum Ceiling/Roof Height		K-Factor/ Orientation	Type of System	Number of Design Sprinklers	Minimum Operating Pressure	
		ft	m	ft	m				psi	bar
Palletized	Class I or II	25	7.6	30	9.1	11.2 (160) Upright	Wet	15	25	1.7
							Dry	25	25	1.7
						16.8 (240) Upright	Wet	15	10	0.7
							Dry	25	15	1.0
						19.6 (280) Pendent	Wet	15	16	1.1
						25.2 (360) Pendent	Wet	15	10	0.7
				35	11	11.2 (160) Upright	Wet	15	25	1.7
							Dry	25	25	1.7
						16.8 (240) Upright	Wet	15	15	1.0
							Dry	25	15	1.0
				40	12	25.2 (360) Pendent	Wet	15	23	1.6
		30	9.1	35	11	19.6 (280) Pendent	Wet	15	25	1.7
				40	12	25.2 (360) Pendent	Wet	15	23	1.6
		35	11	40	12	19.6 (280) Pendent	Wet	15	30	2.1
						25.2 (360) Pendent	Wet	15	23	1.6
	Class III	25	7.6	30	9.1	11.2 (160) Upright	Wet	15	25	1.7
							Dry	25	25	1.7
						16.8 (240) Upright	Wet	15	15	1.0
							Dry	25	15	1.0
						19.6 (280) Pendent	Wet	15	16	1.1
						25.2 (360) Pendent	Wet	15	10	0.7
				35	11	11.2 (160) Upright	Wet	15	25	1.7
							Dry	25	25	1.7
						16.8 (240) Upright	Wet	15	15	1.0
							Dry	25	15	1.0
				40	12	25.2 (360) Pendent	Wet	15	23	1.6
		30	9.1	35	11	19.6 (280) Pendent	Wet	15	25	1.7
				40	12	25.2 (360) Pendent	Wet	15	23	1.6
		35	11	40	12	19.6 (280) Pendent	Wet	15	30	2.1
						25.2 (360) Pendent	Wet	15	23	1.6
	Class IV	20	6.1	30	9.1	11.2 (160) Upright	Wet	20	25	1.7
								15	50	3.4
						16.8 (240) Upright	Wet	20	15	1.0
								15	22	1.5
						19.6 (280) Pendent	Wet	15	16	1.1
						25.2 (360) Pendent	Wet	15	10	0.7
				40	12	25.2 (360) Pendent	Wet	15	23	1.6
		25	7.6	30	9.1	16.8 (240) Upright	Wet	15	22	1.5
						19.6 (280) Pendent	Wet	15	16	1.1
						25.2 (360) Pendent	Wet	15	10	0.7
				40	12	25.2 (360) Pendent	Wet	15	23	1.6
		30	9.1	35	11	19.6 (280) Pendent	Wet	15	25	1.7
				40	12	25.2 (360) Pendent	Wet	15	23	1.6
		35	11	40	12	19.6 (280) Pendent	Wet	15	30	2.1
						25.2 (360) Pendent	Wet	15	23	1.6

(Continues)

EDUFIRE.IR

TABLE 22.2 Continued

Configuration	Commodity Class	Maximum Storage Height		Maximum Ceiling/Roof Height		K-Factor/ Orientation	Type of System	Number of Design Sprinklers	Minimum Operating Pressure	
		ft	m	ft	m				psi	bar
Solid piled	Class I or II	20	6.1	30	9.1	11.2 (160) Upright	Wet	15	25	1.7
							Dry	25	25	1.7
						16.8 (240) Upright	Wet	15	10	0.7
							Dry	25	15	1.0
						19.6 (280) Pendent	Wet	15	16	1.1
						25.2 (360) Pendent	Wet	15	10	0.7
				40	12	25.2 (360) Pendent	Wet	15	23	1.6
		25	7.6	30	9.1	16.8 (240) Upright	Wet	15	10	0.7
						19.6 (280) Pendent	Wet	15	16	1.1
						25.2 (360) Pendent	Wet	15	10	0.7
				40	12	25.2 (360) Pendent	Wet	15	23	1.6
		30	9.1	35	11	19.6 (280) Pendent	Wet	15	25	1.7
				40	12	25.2 (360) Pendent	Wet	15	23	1.6
		35	11	40	12	19.6 (280) Pendent	Wet	15	30	2.1
						25.2 (360) Pendent	Wet	15	23	1.6
	Class III	20	6.1	30	9.1	11.2 (160) Upright	Wet	15	25	1.7
							Dry	25	25	1.7
						16.8 (240) Upright	Wet	15	15	1.0
							Dry	25	15	1.0
						19.6 (280) Pendent	Wet	15	16	1.1
						25.2 (360) Pendent	Wet	15	10	0.7
				40	12	25.2 (360) Pendent	Wet	15	23	1.6
		25	7.6	30	9.1	16.8 (240) Upright	Wet	15	22	1.5
						19.6 (280) Pendent	Wet	15	16	1.1
						25.2 (360) Pendent	Wet	15	10	0.7
				40	12	25.2 (360) Pendent	Wet	15	23	1.6
		30	9.1	35	11	19.6 (280) Pendent	Wet	15	25	1.7
				40	12	25.2 (360) Pendent	Wet	15	23	1.6
		35	11	40	12	19.6 (280) Pendent	Wet	15	30	2.1
						25.2 (360) Pendent	Wet	15	23	1.6
	Class IV	20	6.1	30	9.1	11.2 (160) Upright	Wet	15	50	3.4
						16.8 (240) Upright	Wet	15	22	1.5
						19.6 (280) Pendent	Wet	15	16	1.1
						25.2 (360) Pendent	Wet	15	10	0.7
				40	12	25.2 (360) Pendent	Wet	15	23	1.6
		25	7.6	30	9.1	16.8 (240) Upright	Wet	15	22	1.5
						19.6 (280) Pendent	Wet	15	16	1.1
						25.2 (360) Pendent	Wet	15	10	0.7
				40	12	25.2 (360) Pendent	Wet	15	23	1.6
		30	9.1	35	11	19.6 (280) Pendent	Wet	15	25	1.7
				40	12	25.2 (360) Pendent	Wet	15	23	1.6
		35	11	40	12	19.6 (280) Pendent	Wet	15	30	2.1
						25.2 (360) Pendent	Wet	15	23	1.6

EDUFIRE.IR

height for the facility, and checks to see if the proposed ceiling/roof deck height is within the allowable maximum permitted for that selection. If it is not, a higher ceiling/roof height selection must be made that is within the maximum allowed. The available sprinkler options can then be identified.

TABLE 22.3 *CMSA Sprinkler Design Criteria for Palletized and Solid-Piled Storage of Group A Plastic Commodities*

Storage Arrangement	*Commodity Class*	*Maximum Storage Height*		*Maximum Ceiling/Roof Height*		*K-Factor/ Orientation*	*Type of System*	*Number of Design Sprinklers*	*Minimum Operating Pressure*	
		ft	*m*	*ft*	*m*				*psi*	*bar*
Palletized	Cartoned nonexpanded plastics	20	6.1	30	9.1	11.2 (160) Upright	Wet	25	25	1.7
						16.8 (240) Upright	Wet	15	22	1.5
						19.6 (280) Pendent	Wet	15	16	1.1
						25.2 (360) Pendent	Wet	15	10	0.7
				40	12	25.2 (360) Pendent	Wet	15	23	1.6
		25	7.6	30	9.1	16.8 (240) Upright	Wet	15	22	1.5
						19.6 (280) Pendent	Wet	15	16	1.1
						25.2 (360) Pendent	Wet	15	10	0.7
				40	12	25.2 (360) Pendent	Wet	15	23	1.6
		30	9.1	35	11	19.6 (280) Pendent	Wet	15	25	1.7
				40	12	25.2 (360) Pendent	Wet	15	23	1.6
		35	11	40	12	19.6 (280) Pendent	Wet	15	30	2.1
						25.2 (360) Pendent	Wet	15	23	1.6
Solid piled	Cartoned nonexpanded plastics	20	6.1	30	9.1	11.2 (160) Upright	Wet	15	50	3.4
						16.8 (240) Upright	Wet	15	22	1.5
						19.6 (280) Pendent	Wet	15	16	1.1
						25.2 (360) Pendent	Wet	15	10	0.7
				40	12	25.2 (360) Pendent	Wet	15	23	1.6
		25	7.6	30	9.1	16.8 (240) Upright	Wet	15	22	1.5
						19.6 (280) Pendent	Wet	15	16	1.1
						25.2 (360) Pendent	Wet	15	10	0.7
				40	12	25.2 (360) Pendent	Wet	15	23	1.6
		30	9.1	35	11	19.6 (280) Pendent	Wet	15	25	1.7
				40	12	25.2 (360) Pendent	Wet	15	23	1.6
		35	11	40	12	19.6 (280) Pendent	Wet	15	30	2.1
						25.2 (360) Pendent	Wet	15	23	1.6
Palletized	Exposed nonexpanded plastics	20	6.1	30	9.1	11.2 (160) Upright	Wet	25	25	1.7
						16.8 (240) Upright	Wet	15	22	1.5
		25	7.6	30	9.1	16.8 (240) Upright	Wet	15	22	1.5
	Cartoned or exposed expanded plastics	18	5.5	26	7.9	11.2 (160) Upright	Wet	15	50	3.4
						16.8 (240) Upright	Wet	15	22	1.5
Solid piled	Cartoned or exposed nonexpanded plastics	20	6.1	30	9.1	11.2 (160) Upright	Wet	15	50	3.4
		25	7.6	30	9.1	16.8 (240) Upright	Wet	15	22	1.5

EDUFIRE.IR

22.4 Single-, Double-, and Multiple-Row Rack Storage for Class I Through Class IV Commodities.

Protection of single-, double-, and multiple-row rack storage for Class I through Class IV commodities shall be in accordance with Table 22.4.

CMSA sprinklers using the discharge criteria of Table 22.4 are based on open rack arrangements. For installations that include solid shelving, see 25.6.3.3.

The design criteria in Table 22.4 must be selected based on the variables in the first six main columns of the table: storage arrangement, commodity class, maximum storage height, maximum ceiling/roof height, K-factor/orientation, and type of system. Once the configuration and the commodity have been identified, the user then selects the maximum storage height, which would include the proposed storage height for the facility, and checks to see if the proposed ceiling/roof deck height is within the allowable maximum permitted for that selection. If it is not, a higher ceiling/roof height selection must be made that is within the maximum allowed. The available sprinkler options can then be identified. It should be noted that not all the options include criteria for both wet and dry systems and that some selections include multiple design options for wet systems.

Table 22.4 has been modified for the 2019 edition to combine both up to and including 25 ft 0 in. and over 25 ft 0 in., so that all densities are represented in a single table, rather than a separate table for each density.

22.5 Single-, Double-, and Multiple-Row Racks of Group A Plastic Commodities.

Protection of single-, double-, and multiple-row rack storage for nonexpanded Group A plastic commodities shall be in accordance with Table 22.5.

TABLE 22.4 *CMSA Sprinkler Design Criteria for Rack Storage of Class I Through Class IV Commodities (Encapsulated and Nonencapsulated)*

Storage Arrangement	*Commodity Class*	*Maximum Storage Height*		*Maximum Ceiling/ Roof Height*		*K-Factor/ Orientation*	*Type of System*	*Number of Design Sprinklers*	*Minimum Operating Pressure*	
		ft	*m*	*ft*	*m*				*psi*	*bar*
Single-, double-, and multiple-row racks (no open-top containers)	Class I or II	20	6.1	30	9.1	11.2 (160) Upright	Wet	15	25	1.7
							Dry	25	25	1.7
						16.8 (240) Upright	Wet	15	10	0.7
							Dry	25	15	1.0
						19.6 (280) Pendent	Wet	15	16	1.1
						25.2 (360) Pendent	Wet	15	10	0.7
				40	12	25.2 (360) Pendent	Wet	15	23	1.6
		25	7.6	30	9.1	11.2 (160) Upright	Wet	20	25	1.7
							Dry	30	25	1.7
						16.8 (240) Upright	Wet	15	10	0.7
							Dry	30	15	1.0
						19.6 (280) Pendent	Wet	15	16	1.1
						25.2 (360) Pendent	Wet	15	10	0.7
				40	12	25.2 (360) Pendent	Wet	15	23	1.6

EDUFIRE.IR

TABLE 22.4 Continued

Storage Arrangement	Commodity Class	Maximum Storage Height		Maximum Ceiling/ Roof Height		K-Factor/ Orientation	Type of System	Number of Design Sprinklers	Minimum Operating Pressure	
		ft	m	ft	m				psi	bar
Single-, double-, and multiple-row racks (no open-top containers)	Class III	20	6.1	30	9.1	11.2 (160) Upright	Wet	15	25	1.7
							Dry	25	25	1.7
						16.8 (240) Upright	Wet	15	15	1.0
							Dry	25	15	1.0
						19.6 (280) Pendent	Wet	15	16	1.1
						25.2 (360) Pendent	Wet	15	10	0.7
				40	12	25.2 (360) Pendent	Wet	15	23	1.6
		25	7.6	30	9.1	11.2 (160) Upright	Wet	*	NA	NA
							Dry	*	NA	NA
						16.8 (240) Upright	Wet	15	22	1.5
							Dry	*	NA	NA
						19.6 (280) Pendent	Wet	15	16	1.1
						25.2 (360) Pendent	Wet	15	10	0.7
				35	11	11.2 (160) Upright	Wet	*	NA	NA
							Dry	*	NA	NA
						16.8 (240) Upright	Wet	*	NA	NA
							Dry	*	NA	NA
						19.6 (280) Pendent	Wet	15	25	1.7
				40	12	19.6 (280) Pendent	Wet	15	30	2.1
						25.2 (360) Pendent	Wet	15	23	1.6
	Class IV	20	6.1	25	7.6	11.2 (160) Upright	Wet	15	50	3.4
						16.8 (240) Upright	Wet	15	22	1.5
						19.6 (280) Pendent	Wet	15	16	1.1
				30	9.1	11.2 (160) Upright	Wet	20	50	3.4
								15	75	5.2
						16.8 (240) Upright	Wet	15	22	1.5
						19.6 (280) Pendent	Wet	15	16	1.1
						25.2 (360) Pendent	Wet	15	10	0.7
				40	12	25.2 (360) Pendent	Wet	15	23	1.6
		25	7.6	30	9.1	11.2 (160) Upright	Wet	*	NA	NA
						16.8 (240) Upright	Wet	15	22	1.5
						19.6 (280) Pendent	Wet	15	16	1.1
						25.2 (360) Pendent	Wet	15	10	0.7
				35	11	11.2 (160) Upright	Wet	*	NA	NA
								*	NA	NA
						16.8 (240) Upright	Wet	*	NA	NA
								*	NA	NA
						19.6 (280) Pendent	Wet	15	25	1.7
				40	12	19.6 (280) Pendent	Wet	15	30	2.1
						25.2 (360) Pendent	Wet	15	23	1.6

NA: Not applicable

*In-rack sprinklers required. See Chapter 25.

EDUFIRE.IR

CMSA sprinklers using the discharge criteria of Table 22.5 are based on open rack arrangements. For installations that include solid shelving, see 25.6.3.3.

The design criteria in Table 22.5 must be selected based on the variables in the first six main columns of the table: storage arrangement, commodity class, maximum storage height, maximum ceiling/roof height, K-factor/orientation, and type of system. Once the configuration and the commodity have been identified, the user then selects the maximum storage height, which would include the proposed storage

TABLE 22.5 *CMSA Sprinkler Design Criteria for Single-, Double-, and Multiple-Row Racks of Group A Plastic Commodities Stored Up and Including 25 ft (7.6 m) in Height*

Storage Arrangement	*Commodity Class*	*Maximum Storage Height*		*Maximum Ceiling/Roof Height*		*K-Factor/ Orientation*	*Type of System*	*Number of Design Sprinklers*	*Minimum Operating Pressure*	
		ft	*m*	*ft*	*m*				*psi*	*bar*
Single-, double-, and multiple-row racks (no open-top containers)	Cartoned nonexpanded plastics	20	6.1	25	7.6	11.2 (160) Upright	Wet	15	50	3.4
						16.8 (240) Upright	Wet	15	22	1.5
						19.6 (280) Pendent	Wet	15	16	1.1
				30	9.1	11.2 (160) Upright	Wet	30	50	3.4
							Wet	20	75	5.2
						16.8 (240) Upright	Wet	15†	22	1.5
						19.6 (280) Pendent	Wet	15	16	1.1
		25	7.6	30	9.1	11.2 (160) Upright	Wet	*	NA	NA
						16.8 (240) Upright	Wet	15†	22	1.5
						19.6 (280) Pendent	Wet	15	16	1.1
						25.2 (360) Pendent	Wet	15	10	0.7
		25	7.6	35	11	11.2 (160) Upright	Wet	*	NA	NA
							Wet	*	NA	NA
						16.8 (240) Upright	Wet	*	NA	NA
							Wet	*	NA	NA
						19.6 (280) Pendent	Wet	15	25	1.7
		35	10.6	40	12	25.2 (360) Pendent	Wet	15	23	0.7
	Exposed nonexpanded plastics	20	6.1	25	7.6	11.2 (160) Upright	Wet	15	50	3.4
						16.8 (240) Upright	Wet	15	22	1.5
		20	6.1	30	9.1	11.2 (160) Upright	Wet	30	50	3.4
							Wet	20	75	5.2
						16.8 (240) Upright	Wet	15†	22	1.5
		25	7.6	30	9.1	11.2 (160) Upright	Wet	*	NA	NA
						16.8 (240) Upright	Wet	15†	22	1.5
		25	7.6	35	11	11.2 (160) Upright	Wet	*	NA	NA
							Wet	*	NA	NA
						16.8 (240) Upright	Wet	*	NA	NA
							Wet	*	NA	NA

NA: Not applicable

*In-rack sprinklers required. See Chapter 25.

†Limited to single- and double-row racks with minimum 8 ft (2.4 m) aisles.

EDUFIRE.IR

height for the facility, and checks to see if the proposed ceiling/roof deck height is within the allowable maximum permitted for that selection. If it is not, a higher ceiling/roof height selection must be made that is within the maximum allowed.

Table 22.5 has been modified in the 2019 edition to combine both up to and including 25 ft 0 in. and over 25 ft 0 in., so that all densities are represented in a single table, rather than a separate table for each density.

N 22.6 Rubber Tires.

Protection of rubber tires with CMSA sprinklers shall be in accordance with Table 22.6.

For rubber tire storage that is to be protected with CMSA sprinklers, the protection criteria are found in Table 22.6. This table provides the user with discharge criteria for K-11.2 and K-16.8 sprinklers at the ceiling, and in-rack sprinklers or high-expansion foam is not required.

The design criteria in Table 22.6 must be selected based on the variables in the first five main columns of the table: piling method, maximum storage height, maximum ceiling/roof height, K-factor, and type of system. Once the configuration and the commodity have been identified, the user then selects the maximum storage height, which would include the proposed storage height for the facility, and checks to see if the proposed ceiling/roof deck height is within the allowable maximum permitted for that selection. If it is not, either alternative design options must be made or a ceiling introduced to reduce the maximum ceiling height to that listed in the table. The available sprinkler options can then be identified.

TABLE 22.6 *Control Mode Specific Application (CMSA) Protection for Rubber Tires*

Piling Method	*Maximum Storage Height*		*Maximum Ceiling/ Roof Height*		*K-Factor*	*Type of System*	*Number of Sprinklers*	*Operating Pressure*
	ft	*m*	*ft*	*m*				
Rubber tire storage, on-side or on-tread, in palletized portable racks, or open portable racks, or fixed racks without solid shelves	25	7.6	32	10	11.2 (160)	Wet	15	75 psi (5.2 bar)
	25	7.6	32	10	16.8 (240)	Wet	15	35 psi (2.4 bar)

22.7 Roll Paper Storage.

Protection of roll paper storage with CMSA sprinklers shall be in accordance with Table 22.7.

Large drop sprinklers [now referred to as K-11.2 (160) CMSA sprinklers] used in the fire tests on roll paper had high-temperature ratings. But 21.7.4, which requires the use of high-temperature sprinklers, does not apply to CMSA sprinklers, and there is no indication in Table 22.7 that CMSA sprinklers with high-temperature sprinklers are required.

The design criteria in Table 22.7 must be selected based on the variables in the main columns of the table: storage height; maximum building height; nominal K-factor; type of system; and the weight of paper (heavyweight, mediumweight, or tissue), the type of storage array (closed, standard, or open), and whether the rolls are banded or unbanded. Once the configuration and the weight of paper have been identified, the user then selects the storage array and whether the rolled paper is banded or unbanded, which would include the proposed storage height for the facility, and checks to see if the proposed ceiling/roof deck height is within the allowable maximum permitted for that selection. If it is not, alternative design options must be made or a ceiling introduced to reduce the maximum ceiling height to that listed in the table. The available sprinkler options can then be identified.

EDUFIRE.IR

TABLE 22.7 *Control Mode Specific Application (CMSA) Protection of Roll Paper Storage [Number of Sprinklers at Operating Pressure, psi (bar)]*

Storage Height		Maximum Building Height		Nominal K-Factor	Type of System	Heavyweight					Mediumweight					Tissue All Storage Arrays
						Closed Array	Standard Array		Open Array		Closed Array	Standard Array		Open Array		
ft	m	ft	m			Banded or Unbanded	Banded	Unbanded	Banded	Unbanded	Banded or Unbanded	Banded	Unbanded	Banded	Unbanded	
20	6.1	30	9.1	11.2 (160)	Wet	15 at 50 (3.4)	15 at 50 (3.4)	15 at 50 (3.4)	15 at 50 (3.4)	NA	15 at 50 (3.4)	15 at 50 (3.4)	15 at 50 (3.4)	NA	NA	See Note
20	6.1	30	9.1	11.2 (160)	Dry	25 at 50 (3.4)	25 at 50 (3.4)	25 at 50 (3.4)	NA	NA	25 at 50 (3.4)	25 at 50 (3.4)	25 at 50 (3.4)	NA	NA	NA
26	7.9	60	18	11.2 (160)	Wet	15 at 50 (3.4)	15 at 50 (3.4)	15 at 50 (3.4)	15 at 50 (3.4)	NA	NA	NA	NA	NA	NA	NA
20	6.1	30	9.1	16.8 (240)	Wet	15 at 22 (1.5)	15 at 22 (1.5)	15 at 22 (1.5)	15 at 22 (1.5)	NA	15 at 22 (1.5)	15 at 22 (1.5)	15 at 22 (1.5)	NA	NA	See Note
20	6.1	30	9.1	16.8 (240)	Dry	25 at 22 (1.5)	25 at 22 (1.5)	25 at 22 (1.5)	NA	NA	25 at 22 (1.5)	25 at 22 (1.5)	25 at 22 (1.5)	NA	NA	NA
26	7.9	60	18	16.8 (240)	Wet	15 at 22 (1.5)	15 at 22 (1.5)	15 at 22 (1.5)	15 at 22 (1.5)	NA	NA	NA	NA	NA	NA	NA

Note: Base design on 25 sprinklers at 75 psi (5.2 bar) for K-11.2 (160) sprinklers or 25 sprinklers at 35 psi (240) for K-16.8 (240) sprinklers when storage is in closed or standard array; other arrays not applicable (NA).

EDUFIRE.IR

CHAPTER

23

ESFR Requirements for Storage Applications

REORGANIZATION NOTE

The new Chapter 23 consolidates all of the early suppression fast-response (ESFR) sprinkler criteria into one chapter. All charts, curves, and tables relative to ESFR sprinklers are now in one location and not intermixed with other sprinkler technologies.

This chapter addresses design concepts that do not use in-rack sprinklers or make any references thereto. All in-rack design concepts have been moved to Chapter 25. The user is encouraged to examine Chapter 23 first for a design regarding the protection of commodities without in-rack sprinklers. If the user is unable to find a concept in Chapter 23, Chapter 25 should be consulted for additional design concepts using in-rack sprinklers.

ESFR sprinklers are designed to provide fire suppression, rather than fire control, for a wide range of combustibles. For ESFR sprinklers to be effective, they must be installed in accordance with the ESFR-specific installation requirements in Section 14.2, with special attention given to avoidance of objects that could obstruct sprinkler spray patterns.

23.1 General.

The criteria in Chapter 20 shall apply to storage protected with ESFR sprinklers.

23.1.1 ESFR sprinklers designed to meet any criteria in this chapter shall be permitted to protect any of the following:

(1) Light hazard occupancies
(2) Ordinary hazard occupancies
(3) Any storage arrangement OH1, OH2, EH1, and EH2 design criteria

ASK THE AHJ

A few of the recent projects reviewed propose ESFR sprinklers. What are ESFR sprinklers?

ESFR sprinklers use a fast-response activation element, and the protection is designed to suppress, or nearly extinguish, a fire. Typical upright and pendent spray sprinklers are control mode sprinklers intended to keep a fire in control or from growing in size until the fire department arrives.

Although the protection criteria would exceed the minimum protection for such hazards, there is nothing wrong with providing more protection than is needed. Typically, there are two circumstances under which ESFR protection might be desirable for a light or ordinary hazard occupancy. The first would be where an ordinary hazard or light hazard portion of a building is adjacent to storage, such as offices or manufacturing facilities in conjunction with storage of the materials being used. In that case, ESFR sprinklers installed throughout the building would be efficient from a design perspective and would provide the owner/tenant with the flexibility to move the storage around as needed.

EDUFIRE.IR

The second situation under which ESFR sprinklers might be found in light or ordinary hazard occupancies would be where a speculative building is constructed with the final use as yet unknown. An engineer might specify and have installed ESFR sprinklers to provide flexibility, but if a retail store, office, or gym eventually moves into the building and keeps the high ceilings, it would not make sense to revamp the sprinkler system.

Systems protecting extra hazard occupancies are specifically left out of this discussion because ESFR sprinklers are not permitted to be used in systems protecting extra hazard occupancies due to the potential for shielding of combustibles. Many extra hazard occupancies have equipment or construction that will shield the combustibles from any fire sprinkler discharge at the ceiling/roof. ESFR sprinklers are not designed to protect hazards where the combustibles are shielded. Therefore, extra hazard occupancies have been specifically left out of the list of permissible ESFR uses.

ESFR sprinklers are also permitted to be used for the protection of storage arrangements requiring protection as an ordinary hazard Group 1 (OH1), ordinary hazard Group 2 (OH2), extra hazard Group 2 (EH1), or extra hazard Group 2 (EH2) design under the provisions of Chapter 4. While the design criteria for EH1 and EH2 are quite similar to that prescribed for extra hazard occupancies, these storage applications under Chapter 4 would not include a shielding hazard as might be the case with other extra hazard occupancy designs.

N **23.1.2 Draft Curtains.**

N **23.1.2.1** Where ESFR sprinkler systems are installed adjacent to sprinkler systems with standard-response sprinklers, a draft curtain of noncombustible construction and at least 2 ft (600 mm) in depth shall be required to separate the two areas.

N **23.1.2.2** A clear aisle of at least 4 ft (1.2 m) centered below the draft curtain shall be maintained for separation.

Where an ESFR sprinkler system is located adjacent to a standard-response sprinkler system without any separation, it is possible for ESFR sprinklers to operate before the standard-response sprinklers if the fire originates below the system using standard-response sprinklers. The best way to prevent this situation is to separate the two systems by a wall. NFPA 13 recognizes that this type of separation is not always possible — in that case, a draft curtain and an aisle can be used to separate the two systems. An aisle is needed to eliminate the potential for a fire starting under or near the draft curtain, with sprinklers operating on both sides.

23.1.3 ESFR sprinkler systems shall be designed such that the minimum operating pressure is not less than that indicated in Table 23.3.1 for commodity, storage height, and building height involved.

The most critical variable where ESFR sprinklers are used is the ceiling height. When the sprinkler discharges water near the ceiling, the water droplets need to fall through the fire plume and reach the seat of the fire to achieve suppression. The longer the water droplet travels in the fire plume, the greater chance it will be evaporated or carried away by the force of the plume. Some ESFR sprinklers simply cannot handle high ceiling spaces. The original ESFR criteria allowed K-14.0 (200) ESFR sprinklers to protect ceilings 40 ft (12 m) in height. However, subsequent fire tests have shown that, given a certain combination of fire ignition points between sprinklers with high clearance scenarios beneath 40 ft (12 m) ceilings, the K-14.0 (200) ESFR sprinkler might not provide fire suppression for all storage commodities. For that reason, the 2013 edition of NFPA 13 limited the use of K-14.0 (200) ESFR sprinklers to buildings with 35 ft (11 m) ceilings. Because the provisions of NFPA 13 generally are not retroactive (as indicated in Section 1.4), the replacement of K-14.0 (200) ESFR sprinklers in buildings having a ceiling height greater than 35 ft (11 m) would not be specifically mandated.

N **23.1.4** The ceiling design criteria for single-, double-, and multiple-row racks in Chapter 23 shall be based on open-rack configurations as defined in 3.3.140.

N **23.1.4.1** ESFR sprinklers shall not be permitted to protect storage on solid shelf racks unless the solid shelf racks are protected with in-rack sprinklers in accordance with Chapter 25.

EDUFIRE.IR

Prior to the 2013 edition, NFPA 13 prohibited the use of ESFR sprinklers with solid shelves because solid shelves prevent water from penetrating down through the racks to reach a fire under the shelves. Paragraph 23.1.4.1 was added in the 2013 edition to permit the use of ESFR sprinklers at the ceiling where in-rack sprinklers are installed below the solid shelves, in accordance with Section 25.6. The in-rack sprinklers protect the storage below the solid shelves.

23.1.4.2 ESFR sprinklers shall not be permitted to protect storage with open-top containers.

ESFR sprinklers are not permitted to protect storage consisting of open-top containers because the containers collect the water and do not allow it down through the racks to reach a fire below the open-top containers.

23.1.4.3 ESFR sprinkler shall be designed such that the minimum operating pressure is not less than that indicated in this chapter for type of storage, commodity, storage height, and building height involved.

N 23.2 ESFR Design Criteria.

ESFR design criteria shall be selected from Section 23.3 through Section 23.13.

23.3 Early Suppression Fast-Response (ESFR) Sprinklers for Palletized or Solid-Piled Storage of Class I Through Class IV Commodities.

23.3.1 Protection of palletized and solid-piled storage of Class I through Class IV commodities shall be in accordance with Table 23.3.1.

ESFR sprinklers are limited to being able to protect solid-piled and palletized storage. Bin box and shelf storage cannot be protected by ESFR sprinklers because the solid nature of the bin box and shelf arrays block sprinkler discharge from reaching the seat of fires originating in bin box and shelf units. For protection of bin box and shelf units, spray sprinklers must be used with density/area protection criteria in accordance with Section 21.2 or 21.2.4.

The design criteria in Table 23.3.1 must be selected based on the variables in the first five main columns of the table: commodity, maximum storage height, maximum ceiling/roof height, nominal K-factor, and orientation. Because the table covers the full range of commodities covered in Chapter 23, no choices need to be made. Moving from left to right in the table, the user selects the maximum storage height, which would include the proposed storage height for the facility, and checks to see if the proposed ceiling/roof deck height is also within the allowable maximum permitted for that selection. If it is not, a higher ceiling/roof height selection must be made that is within the maximum allowed. The available sprinkler options can then be identified.

FAQ [23.3.1]

Can ESFR sprinklers be used in buildings with ceiling heights greater than those in Table 23.3.1?

There are specially listed ESFR sprinklers that have achieved listings for ceiling heights beyond those in Table 23.3.1. These specially listed sprinklers are generally permitted to be used under the rules of Section 15.2 and the equivalency rules of Chapter 1, provided that all the restrictions in the special listing are followed.

Table 23.3.1 provides the minimum water pressure necessary at each sprinkler. To determine the minimum flow that needs to discharge from the sprinkler, the user must take the square root of the pressure and multiply it by the K-factor for the sprinkler, as shown in the following equation:

$$Q = K\sqrt{P}$$

23.4 Early Suppression Fast-Response (ESFR) Sprinklers for Palletized or Solid-Piled Storage of Group A Plastic Commodities.

N **23.4.1* Storage Conditions.** The design of the sprinkler system shall be based on those conditions that routinely or periodically exist in a building and create the greatest water demand, which include the following:

(1) Pile height
(2) Clearance to ceiling
(3) Pile stability
(4) Array

EDUFIRE.IR

TABLE 23.3.1 *ESFR Protection of Palletized and Solid-Piled Storage of Class I Through Class IV Commodities*

Commodity	*Maximum Storage Height*		*Maximum Ceiling/ Roof Height*		*Nominal K-Factor*	*Orientation*	*Minimum Operating Pressure*	
	ft	*m*	*ft*	*m*			*psi*	*bar*
Class I, II, III, or IV, encapsulated and nonencapsulated (no open-top containers)	20	6.1	25	7.6	14.0 (200)	Upright/pendent	50	3.4
					16.8 (240)	Upright/pendent	35	2.4
					22.4 (320)	Pendent	25	1.7
					25.2 (360)	Pendent	15	1.0
	25	7.6	30	9.1	14.0 (200)	Upright/pendent	50	3.4
					16.8 (240)	Upright/pendent	35	2.4
					22.4 (320)	Pendent	25	1.7
					25.2 (360)	Pendent	15	1.0
			32	10	14.0 (200)	Upright/pendent	60	4.1
					16.8 (240)	Upright/pendent	42	2.9
	30	9.1	35	11	14.0 (200)	Upright/pendent	75	5.2
					16.8 (240)	Upright/pendent	52	3.6
					22.4 (320)	Pendent	35	2.4
					25.2 (360)	Pendent	20	1.4
	35	11	40	12	16.8 (240)	Pendent	52	3.6
					22.4 (320)	Pendent	40	2.7
					25.2 (360)	Pendent	25	1.7
	35	11	45	14	22.4 (320)	Pendent	40	2.7
					25.2 (360)	Pendent	40	2.7
	40	12	45	14	22.4 (320)	Pendent	40	2.7
					25.2 (360)	Pendent	40	2.7

N **A.23.4.1** An evaluation for each field situation should be made to determine the worst applicable height–clearance to ceiling relationship that can be expected to appear in a particular case. Fire tests have shown that considerably greater demands occur where the clearance to ceiling is 10 ft (3.0 m) as compared to 3 ft (900 mm) and where a pile is stable as compared to an unstable pile. Since a system is designed for a particular clearance to ceiling, the system could be inadequate when significant areas do not have piling to the design height and larger clearances to ceiling. This can also be true where the packaging or arrangement is changed so that stable piling is created where unstable piling existed. Recognition of these conditions is essential to avoid installation of protection that is inadequate or becomes inadequate because of changes.

No tests were conducted simulating a peaked roof configuration. However, it is expected that the principles of Chapter 20 still apply. The worst applicable height–clearance to ceiling relationship that can be expected to occur should be found, and protection should be designed for it. If storage is all at the same height, the worst height–clearance to ceiling relationship creating the greatest water demand would occur under the peak. If commodities are stored higher under the peak, the various height–clearance to ceiling relationships should be tried and the one creating the greatest water demand used for designing protection.

EDUFIRE.IR

The fire protection system has to be designed with the worst-case combination of variables to make sure the owner is protected. If the owner is going to use some closed array storage and some open array storage, then the open array, being the worst-case arrangement due to the large flue spaces between piles, must be the subject of the design. Likewise, if the piles are going to be considered stable at times and unstable at other times, then the worst-case of the stable piles should be taken into account in the design of the sprinkler system.

23.4.2 Protection of palletized and solid-piled storage of cartoned or exposed nonexpanded plastic and cartoned expanded or exposed expanded plastic shall be in accordance with Table 23.4.2.

ESFR sprinklers are limited to being able to protect solid-piled and palletized storage. Bin box and shelf storage cannot be protected by ESFR sprinklers because the solid nature of the bin box and shelf arrays blocks water discharge from the sprinklers from reaching the seat of fires originating in bin box and shelf units. For protection of bin box and shelf units, spray sprinklers with density/area protection criteria must be used in accordance with Section 21.3.

The design criteria in Table 23.4.2 must be selected based on the variables in the first six main columns of the table: storage arrangement, commodity, maximum storage height, maximum ceiling/roof height, nominal K-factor, and orientation. Because the table covers the full range of commodities covered under the chapter, no choice is necessary. The user selects the maximum storage height, which would include the proposed storage height for the facility, and checks to see if the proposed ceiling/roof deck height is within the allowable maximum permitted for that selection. If it is not, a higher ceiling/roof height selection must be made that is within the maximum allowed. The available sprinkler options can then be identified.

Table 23.4.2 has been modified for the 2019 edition to combine both up to and including 25 ft 0 in. and over 25 ft 0 in., so that all densities are represented in a single table, rather than a separate table for each density.

23.5 Early Suppression Fast-Response (ESFR) Sprinklers for Rack Storage of Class I Through Class IV Commodities.

23.5.1 Protection of single-, double-, and multiple-row rack storage of Class I through Class IV commodities shall be in accordance with Table 23.5.1.

The design criteria in Table 23.5.1 must be selected based on the variables in the first six main columns of the table: storage arrangement, commodity, maximum storage height, maximum ceiling/roof height, nominal K-factor, and orientation. Because the table covers the full range of commodities covered under the chapter, no choice is necessary. The user selects the maximum storage height, which would include the proposed storage height for the facility, and checks to see if the proposed ceiling/roof deck height is within the allowable maximum permitted for that selection. If it is not, a higher ceiling/roof height selection must be made that is within the maximum allowed. The available sprinkler options can then be identified.

Table 23.5.1 has been modified for the 2019 edition to combine both up to and including 25 ft 0 in. and over 25 ft 0 in., so that all densities are represented in a single table, rather than a separate table for each density.

23.6 Early Suppression Fast-Response (ESFR) Sprinklers for Rack Storage of Group A Plastic Commodities.

23.6.1 Protection of single-, double-, and multiple-row rack storage of cartoned or exposed nonexpanded Group A plastic and cartoned expanded Group A plastic shall be in accordance with Table 23.6.1.

FAQ [23.6.1]

For buildings where the ceiling/roof height falls between the values shown in the ceiling/roof height column in Table 23.6.1, is it acceptable to interpolate the design criteria for ESFR sprinklers?

No, where the ceiling/roof height falls between the given values in Table 23.6.1, the design criteria for the next higher ceiling/roof height must be chosen.

EDUFIRE.IR

TABLE 23.4.2 *ESFR Protection of Palletized and Solid-Piled Storage of Group A Plastic Commodities*

Storage Arrangement	Commodity	Maximum Storage Height		Maximum Ceiling/Roof Height		Nominal K-Factor	Orientation	Minimum Operating Pressure	
		ft	m	ft	m			psi	bar
Palletized and solid-piled storage (no open-top containers)	Cartoned nonexpanded plastic	20	6.1	25	7.6	14.0 (200)	Upright/pendent	50	3.4
						16.8 (240)	Upright/pendent	35	2.4
						22.4 (320)	Pendent	25	1.7
						25.2 (360)	Pendent	15	1.0
				30	9.1	14.0 (200)	Upright/pendent	50	3.4
						16.8 (240)	Upright/pendent	35	2.4
						22.4 (320)	Pendent	25	1.7
						25.2 (360)	Pendent	15	1.0
				35	11	14.0 (200)	Upright/pendent	75	5.2
						16.8 (240)	Upright/pendent	52	3.6
						22.4 (320)	Pendent	35	2.4
						25.2 (360)	Pendent	20	1.4
		25	7.6	40	12	16.8 (240)	Pendent	52	3.6
						22.4 (320)	Pendent	40	2.7
						25.2 (360)	Pendent	25	1.7
				45	14	22.4 (320)	Pendent	40	2.7
						25.2 (360)	Pendent	40	2.7
				30	9.1	14.0 (200)	Upright/pendent	50	3.4
						16.8 (240)	Upright/pendent	35	2.4
						22.4 (320)	Pendent	25	1.7
						25.2 (360)	Pendent	15	1.0
				32	10	14.0 (200)	Upright/pendent	60	4.1
						16.8 (240)	Upright/pendent	42	2.9
				35	11	14.0 (200)	Upright or pendent	75	5.2
						16.8 (240)	Upright/pendent	52	3.6
						22.4 (320)	Pendent	35	2.4
						25.2 (360)	Pendent	20	1.4
				40	12	16.8 (240)	Pendent	52	3.6
						22.4 (320)	Pendent	40	2.7
						25.2 (360)	Pendent	25	1.7
				45	14	22.4 (320)	Pendent	40	2.7
						25.2 (360)	Pendent	40	2.7
		30	9.1	35	11	14.0 (200)	Upright/pendent	75	5.2
						16.8 (240)	Upright/pendent	52	3.6
						22.4 (320)	Pendent	35	2.4
						25.2 (360)	Pendent	20	1.4
				40	12	16.8 (240)	Pendent	52	3.6
						22.4 (320)	Pendent	40	2.7
						25.2 (360)	Pendent	25	1.7
				45	14	22.4 (320)	Pendent	40	2.7
						25.2 (360)	Pendent	40	2.7

EDUFIRE.IR

TABLE 23.4.2 Continued

Storage Arrangement	Commodity	Maximum Storage Height		Maximum Ceiling/Roof Height		Nominal K-Factor	Orientation	Minimum Operating Pressure	
		ft	m	ft	m			psi	bar
Palletized and solid-piled storage (no open-top containers)		35	10.7	40	12	16.8 (240)	Pendent	52	3.6
						22.4 (320)	Pendent	40	2.7
						25.2 (360)	Pendent	25	1.7
				45	14	22.4 (320)	Pendent	40	2.7
						25.2 (360)	Pendent	40	2.7
		40	12.2	45	14	22.4 (320)	Pendent	40	2.7
						25.2 (360)	Pendent	40	2.7
	Exposed nonexpanded plastic	20	6.1	25	7.6	14.0 (200)	Pendent	50	3.4
						16.8 (240)	Pendent	35	2.4
				30	9.1	14.0 (200)	Pendent	50	3.4
						16.8 (240)	Pendent	35	2.4
				35	11	14.0 (200)	Pendent	75	5.2
						16.8 (240)	Pendent	52	3.6
				40	12	16.8 (240)	Pendent	52	3.6
		25	7.6	30	9.1	14.0 (200)	Pendent	50	3.4
						16.8 (240)	Pendent	35	2.4
				32	9.7	14.0 (200)	Pendent	60	4.1
						16.8 (240)	Pendent	42	2.9
				35	11	14.0 (200)	Pendent	75	5.2
						16.8 (240)	Pendent	52	3.6
				40	12	16.8 (240)	Pendent	52	3.6
						22.4 (320)	Pendent	50	3.4
						25.2 (360)	Pendent	50	3.4
		30	9.1	35	11	14.0 (200)	Pendent	75	5.2
						16.8 (240)	Pendent	52	3.6
				40	12	16.8 (240)	Pendent	52	3.6
						22.4 (320)	Pendent	50	3.4
						25.2 (360)	Pendent	50	3.4
		35	11	40	12	16.8 (240)	Pendent	52	3.6
						22.4 (320)	Pendent	50	3.4
						25.2 (360)	Pendent	50	3.4
	Cartoned expanded plastic	20	6.1	25	7.6	14.0 (200)	Upright/pendent	50	3.4
						16.8 (240)	Upright/pendent	35	2.4
				30	9.1	14.0 (200)	Upright/pendent	50	3.4
						16.8 (240)	Upright/pendent	35	2.4
		25	7.6	30	9.1	14.0 (200)	Upright/pendent	50	3.4
						16.8 (240)	Upright/pendent	35	2.4
				32	10	14.0 (200)	Pendent	60	4.1
						16.8 (240)	Upright/pendent	42	2.9
	Exposed* expanded plastic	25	7.6	40	12	25.2 (360)	Pendent	60	4.1

*Applies to closed array storage only.

EDUFIRE.IR

TABLE 23.5.1 *ESFR Sprinkler Protection of Rack Storage of Class I Through Class IV Commodities*

Storage Arrangement	*Commodity*	*Maximum Storage Height*		*Maximum Ceiling/Roof Height*		*Nominal K-Factor*	*Orientation*	*Minimum Operating Pressure*	
		ft	*m*	*ft*	*m*			*psi*	*bar*
Single-row, double-row, and multiple-row racks (no open-top containers)	Class I, II, III, or IV, encapsulated or nonencapsulated	20	6.1	25	7.6	14 (200)	Upright/pendent	50	3.4
						16.8 (240)	Upright/pendent	35	2.4
						22.4 (320)	Pendent	25	1.7
						25.2 (360)	Pendent	15	1
				30	9.1	14 (200)	Upright/pendent	50	3.4
						16.8 (240)	Upright/pendent	35	2.4
						22.4 (320)	Pendent	25	1.7
						25.2 (360)	Pendent	15	1
				35	11	14 (200)	Upright/pendent	75	5.2
						16.8 (240)	Upright/pendent	52	3.6
						22.4 (320)	Pendent	35	2.4
						25.2 (360)	Pendent	20	1.4
				40	12	16.8 (240)	Pendent	52	3.6
						22.4 (320)	Pendent	40	2.8
						25.2 (360)	Pendent	25	1.7
				45	14	14 (200)	Pendent*	NA	NA
						16.8 (240)	Pendent*	NA	NA
						22.4 (320)	Pendent	40	2.8
						25.2 (360)	Pendent	40	2.8
		25	7.6	30	9.1	14 (200)	Upright/pendent	50	3.4
						16.8 (240)	Upright/pendent	35	2.4
						22.4 (320)	Pendent	25	1.7
						25.2 (360)	Pendent	15	1.0
				32	10	14 (200)	Upright/pendent	60	4.1
						16.8 (240)	Upright/pendent	42	2.9
				35	11	14 (200)	Upright/pendent	75	5.2
						16.8 (240)	Upright/pendent	52	3.6
						22.4 (320)	Pendent	35	2.4
						25.2 (360)	Pendent	20	1.4
				40	12	16.8 (240)	Pendent	52	3.6
						22.4 (320)	Pendent	40	2.8
						25.2 (360)	Pendent	25	1.7
				45	14	14 (200)	Pendent*	NA	NA
						16.8 (240)	Pendent*	NA	NA
						22.4 (320)	Pendent	40	2.8
						25.2 (360)	Pendent	40	2.8

EDUFIRE.IR

TABLE 23.5.1 *Continued*

Storage Arrangement	*Commodity*	*Maximum Storage Height*		*Maximum Ceiling/Roof Height*		*Nominal K-Factor*	*Orientation*	*Minimum Operating Pressure*	
		ft	*m*	*ft*	*m*			*psi*	*bar*
Single-, double-, and multiple-row rack (no open-top containers)	Class I, II, III, or IV, encapsulated or nonencapsulated	30	9.1	35	11	14 (200)	Upright/pendent	75	5.2
						16.8 (240)	Upright/pendent	52	3.6
						22.4 (320)	Pendent	35	2.4
						25.2 (360)	Pendent	20	1.4
				40	12	16.8 (240)	Pendent	52	3.6
						22.4 (320)	Pendent	40	2.8
						25.2 (360)	Pendent	25	1.7
				45	14	14 (200)	Pendent*	NA	NA
						16.8 (240)	Pendent*	NA	NA
						22.4 (320)	Pendent	40	2.8
						25.2 (360)	Pendent	40	2.8
		35	10.7	40	12	16.8 (240)	Pendent	52	3.6
						22.4 (320)	Pendent	40	2.8
						25.2 (360)	Pendent	25	1.7
				45	14	14 (200)	Pendent*	NA	NA
						16.8 (240)	Pendent*	NA	NA
						22.4 (320)	Pendent	40	2.8
						25.2 (360)	Pendent	40	2.8
		40	12	45	14	16.8 (240)	Pendent*	NA	NA
						22.4 (320)	Pendent	40	2.8
						25.2 (360)	Pendent	40	2.8

*In-rack sprinklers required. See Chapter 25.
NA: Not applicable.

The design criteria in Table 23.6.1 must be selected based on the variables in the first six main columns of the table: storage arrangement, commodity, maximum storage height, maximum ceiling/roof height, nominal K-factor, and orientation. Because the table covers the full range of commodities covered under the chapter, no choice is necessary. The user selects the maximum storage height, which would include the proposed storage height for the facility, and checks to see if the proposed ceiling/roof deck height is also within the allowable maximum permitted for that selection. If it is not, a higher ceiling/roof height selection must be made that is within the maximum allowed. The available sprinkler options can then be identified.

Some ESFR sprinklers simply cannot handle high ceiling spaces without help from in-rack sprinklers. The original ESFR criteria allowed K-14.0 ESFR sprinklers to protect ceilings 40 ft (12 m) in height without in-rack sprinklers. However, subsequent fire tests showed that, given a certain combination of fire ignition points between sprinklers with a high clearance scenario beneath 40 ft (12 m) high ceilings, the K-14.0 ESFR sprinkler might not provide fire suppression for all storage commodities. For this reason, the 2013 edition of NFPA 13 limited the use of K-14.0 ESFR sprinklers to buildings with 35 ft (11 m) ceilings when in-rack sprinklers are not being used. Because the provisions of NFPA 13 generally are not retroactive (as indicated in Section 1.4), the replacement of K-14.0 ESFR sprinklers in buildings with a ceiling height greater than 35 ft (11 m) would not be specifically mandated.

EDUFIRE.IR

TABLE 23.6.1 *ESFR Protection of Rack Storage of Group A Plastic Commodities*

Storage Arrangement	*Commodity*	*Maximum Storage Height*		*Maximum Ceiling/Roof Height*		*Nominal K-Factor*	*Orientation*	*Minimum Operating Pressure*	
		ft	*m*	*ft*	*m*			*psi*	*bar*
Single-, double-, and multiple-row racks (no open-top containers)	Cartoned nonexpanded	20	6.1	25	7.6	14 (200)	Upright/pendent	50	3.4
						16.8 (240)	Upright/pendent	35	2.4
						22.4 (320)	Pendent	25	1.7
						25.2 (360)	Pendent	15	1
				30	9.1	14 (200)	Upright/pendent	50	3.4
						16.8 (240)	Upright/pendent	35	2.4
						22.4 (320)	Pendent	25	1.7
						25.2 (360)	Pendent	15	1
				35	11	14 (200)	Upright/pendent	75	5.2
						16.8 (240)	Upright/pendent	52	3.6
						22.4 (320)	Pendent	35	2.4
						25.2 (360)	Pendent	20	1.4
				40	12	16.8 (240)	Pendent	52	3.6
						22.4 (320)	Pendent	40	2.7
						25.2 (360)	Pendent	25	1.7
				45	14	14 (200)	Pendent*	NA	NA
						16.8 (240)	Pendent*	NA	NA
						22.4 (320)	Pendent	40	2.7
						25.2 (360)	Pendent	40	2.7
		25	7.6	30	9.1	14 (200)	Upright/pendent	50	3.4
						16.8 (240)	Upright/pendent	35	2.4
						22.4 (320)	Pendent	25	1.7
						25.2 (360)	Pendent	15	1
				32	10	14 (200)	Upright/pendent	60	4.1
						16.8 (240)	Upright/pendent	42	2.9
				35	11	14 (200)	Upright/pendent	75	5.2
						16.8 (240)	Upright/pendent	52	3.6
						22.4 (320)	Pendent	35	2.4
						25.2 (360)	Pendent	20	1.4
				40	12	16.8 (240)	Pendent	52	3.6
						22.4 (320)	Pendent	40	2.7
						25.2 (360)	Pendent	25	1.7
				45	14	14 (200)	Pendent*	NA	NA
						16.8 (240)	Pendent*	NA	NA
						22.4 (320)	Pendent	40	2.7
						25.2 (360)	Pendent	40	2.7

EDUFIRE.IR

TABLE 23.6.1 Continued

Storage Arrangement	Commodity	Maximum Storage Height		Maximum Ceiling/Roof Height		Nominal K-Factor	Orientation	Minimum Operating Pressure	
		ft	m	ft	m			psi	bar
Single-, double-, and multiplerow racks (no open-top containers)	Cartoned nonexpanded	30	9.1	35	11	14 (200)	Upright/pendent	75	5.2
						16.8 (240)	Upright/pendent	52	3.6
						22.4 (320)	Pendent	35	2.4
						25.2 (360)	Pendent	20	1.4
				40	12	16.8 (240)	Pendent	52	3.6
						22.4 (320)	Pendent*	40	2.7
						25.2 (360)	Pendent*	25	1.7
				45	14	14 (200)	Pendent*	NA	NA
						16.8 (240)	Pendent*	NA	NA
						22.4 (320)	Pendent	40	2.7
						25.2 (360)	Pendent	40	2.7
		35	11	40	12	16.8 (240)	Pendent	52	3.6
						25.2 (360)	Pendent	25	1.7
				45	14	14 (200)	Pendent*	NA	NA
						16.8 (240)	Pendent*	NA	NA
						22.4 (320)	Pendent	40	2.7
						25.2 (360)	Pendent	40	2.7
		40	12	45	14	14 (200)	Pendent*	NA	NA
						16.8 (240)	Pendent*	NA	NA
						22.4 (320)	Pendent	40	2.7
						25.2 (360)	Pendent	40	2.7
	Cartoned Expanded	20	6.1	25	7.6	14 (200)	Upright/pendent	50	3.4
						16.8 (240)	Upright/pendent	35	2.4
				30	9.1	14 (200)	Upright/pendent	50	3.4
						16.8 (240)	Upright/pendent	35	2.4
		25	7.6	30	9.1	14 (200)	Upright/pendent	50	3.4
						16.8 (240)	Upright/pendent	35	2.4
				32	10	14 (200)	Pendent	60	4.1
						16.8 (240)	Upright/pendent	42	2.9
	Exposed nonexpanded	20	6.1	25	7.6	14 (200)	Pendent	50	3.4
						16.8 (240)	Pendent	35	2.4
				30	9.1	14 (200)	Pendent	50	3.4
						16.8 (240)	Pendent	35	2.4
				35	11	14 (200)	Pendent	75	5.2
						16.8 (240)	Pendent	52	3.6
				40	12	16.8 (240)	Pendent	52	3.6
				45	14	14 (200)	Pendent*	NA	NA
						16.8 (240)	Pendent*	NA	NA

(Continues)

EDUFIRE.IR

TABLE 23.6.1 Continued

Storage Arrangement	Commodity	Maximum Storage Height		Maximum Ceiling/Roof Height		Nominal K-Factor	Orientation	Minimum Operating Pressure	
		ft	m	ft	m			psi	bar
Single-, double-, and multiplerow racks (no open-top containers)	Exposed nonexpanded	25	7.6	30	9.1	14 (200)	Pendent	50	3.4
						16.8 (240)	Pendent	35	2.4
				32	10	14 (200)	Pendent	60	4.1
						16.8 (240)	Pendent	42	2.9
				35	11	14 (200)	Pendent	75	5.2
						16.8 (240)	Pendent	52	3.6
				40	12	16.8 (240)	Pendent	52	3.6
						22.4 (320)	Pendent	50	3.4
						25.2 (360)	Pendent	50	3.4
				45	14	14 (200)	Pendent*	NA	NA
						16.8 (240)	Pendent*	NA	NA
		30	9.1	35	10.7	14 (200)	Pendent	75	5.2
						16.8 (240)	Pendent	52	3.6
				40	11	16.8 (240)	Pendent	52	3.6
						22.4 (320)	Pendent	50	3.4
						25.2 (360)	Pendent	50	3.4
				45	12	14 (200)	Pendent*	NA	NA
						16.8 (240)	Pendent*	NA	NA
		35	11	40	12	16.8 (240)	Pendent	52	3.6
						22.4 (320)	Pendent	50	3.4
						25.2 (360)	Pendent	50	3.4
				45	14	14 (200)	Pendent*	NA	NA
						16.8 (240)	Pendent*	NA	NA
		40	12	45	14	14 (200)	Pendent*	NA	NA
						16.8 (240)	Pendent*	NA	NA

*In-rack sprinklers required. See Chapter 25.

NA: Not applicable.

23.6.1.1 ESFR protection as defined shall not apply to the following:

(1) Rack storage involving solid shelves, except as permitted by 23.6.1.2
(2) Rack storage involving open-top cartons or containers

Prior to the 2013 edition, NFPA 13 prohibited the use of ESFR sprinklers with solid shelves because solid shelves prevent water from penetrating down through the racks to reach a fire under the shelves. Paragraph 23.6.1.1 was added in the 2013 edition to permit the use of ESFR sprinklers at the ceiling where in-rack sprinklers are installed below the solid shelves, in accordance with Section 25.6. The in-rack sprinklers protect the storage below the solid shelves.

ESFR sprinklers are not permitted to protect storage consisting of open-top containers because the containers collect the water and do not allow it down through the racks to reach a fire below the open-top containers. See the commentary to 23.6.1.2 for additional discussion.

EDUFIRE.IR

23.6.1.2 ESFR sprinklers shall not be permitted to protect storage on solid shelf racks unless the solid shelf racks are protected with in-rack sprinklers in accordance with Section 25.6.

This requirement also addresses concerns with the installation of a solid shelf high up in the storage rack that would block the discharge of the overhead ESFR sprinkler. The installed in-rack sprinklers at the upper level height of a solid shelf level would be insufficient to make up for the blocked discharge for the full height beneath that solid shelf level. Requiring installation beneath every tier from the solid shelf level down addresses this concern and ensures that in-rack sprinkler discharge is available at sufficient vertical intervals.

23.6.2 ESFR sprinkler systems shall be designed such that the minimum operating pressure is not less than that indicated in Table 23.6.1 for type of storage, commodity, storage height, and building height involved.

23.6.3 The design area shall consist of the most hydraulically demanding area of 12 sprinklers, consisting of four sprinklers on each of three branch lines.

NFPA 13 used to require that an additional two sprinklers be added to the 12-sprinkler design to make a 14-sprinkler design. Starting with the 2013 edition, that rule was dropped because the committee reviewed the 20-year history of ESFR sprinklers in actual fire situations and found the 12-sprinkler design to be adequate, even where additional sprinklers were located beneath obstructions.

FAQ [23.6.1.1]

Can ESFR sprinklers be used in buildings with ceiling heights greater than those in Table 23.6.1?

There might be special ESFR sprinklers that have achieved listings for ceiling heights beyond those in Table 23.6.1. These specially listed sprinklers are generally permitted to be used under the rules of Section 15.2 and the equivalency rules of Chapter 1, provided all the restrictions in the special listing are followed.

Table 23.6.1 provides the minimum water pressure that is necessary at each sprinkler. To determine the minimum flow that needs to discharge from the sprinkler, the user must take the square root of the pressure and multiply it by the K-factor for the sprinkler, as shown in the following equation:

$$Q = K\sqrt{P}$$

23.7* Protection of Exposed Expanded Group A Plastics.

The criteria for the protection of rack storage of exposed expanded Group A plastics in Section 23.7 were added in the 2016 edition. To develop these criteria, the FPRF conducted a series of full-scale fire tests and documented the results in the report entitled *Protection of Rack Stored Exposed Expanded Group A Plastics with ESFR Sprinklers and Vertical Barriers*. Those tests demonstrated the effectiveness of a selected design criteria using a K-25.2 sprinkler combined with solid vertical barriers. However, this selected set of design criteria might not be representative of all available design criteria as indicated in A.20.4.8, which references Factory Mutual as a potential alternative source for protection criteria as approved by the authority having jurisdiction.

A.23.7 The Fire Protection Research Foundation conducted a series of full-scale fire tests at Underwriters Laboratories to develop protection criteria for the rack storage of exposed expanded Group A plastic commodities. The tests are documented in the report, "Protection of Rack Stored Exposed Expanded Group A Plastics with ESFR Sprinklers and Vertical Barriers." The criteria for exposed expanded plastics are based on Tests 2, 3, 7, and 8 of the series, which investigated a 40 ft (12 m) ceiling with a range of storage heights. The tests used K-25.2 intermediate-temperature ESFR sprinklers with vertical barriers attached to the rack uprights at nominal 16 ft (4.9 m) apart. Vertical barriers of sheet metal and ⅜ in. plywood were both investigated. In Tests 1 through 6, transverse flue spaces between commodities were blocked. Comparing the results of Test 6, with blocked transverse flue spaces, and Test 7, with no blocking of transverse flue spaces, revealed the number of operated sprinklers decreased from 11 to 7 and improved suppression of the fire. The criteria for exposed expanded plastics are based on Tests 9 and 10 of the series, which investigated a 30 ft (9.1 m) ceiling with a range of storage heights. The tests used K-25.2 intermediate-temperature ESFR sprinklers with vertical barriers attached to the rack uprights at 16 ft (4.9 m) (nominal) apart. Vertical barriers of ⅜ in. plywood was investigated.

The area limitation between the vertical barriers and aisles indicated in 23.7.8.2 will limit the depth of a multiple-row rack arrangement. The hose stream allowance and water supply duration requirements considered the burning characteristics of the exposed expanded plastic

EDUFIRE.IR

commodity, which generates a high rate of heat release very quickly. However, the commodity involved in the combustion process is quickly consumed after fire suppression or control is achieved.

23.7.1 Protection of single-, double-, and multiple-row rack storage of exposed expanded Group A plastics shall be permitted to be in accordance with 23.7.2 through 23.7.8.

The text in Section 23.7 includes a series of requirements that must be followed to protect exposed expanded Group A plastics. The test commodity, polystyrene meat trays such as those shown in Exhibit 23.1, was used throughout the series of tests conducted by the FPRF.

EXHIBIT 23.1 Exposed Expanded Group A Plastic Test Commodity — Polystyrene Meat Trays: (left) Shrink-Wrapped Bundles of Trays and (right) Front and Back of Tray. (Courtesy of UL)

23.7.2 The maximum storage height shall be 35 ft (11 m).

23.7.3 The maximum ceiling height shall be 40 ft (12 m).

23.7.4 Sprinklers shall be intermediate temperature–rated ESFR pendent sprinklers with a nominal K-factor of K-25.2 (360).

N **23.7.4.1** The maximum sprinkler deflector distance below the ceiling shall be 14 in. (350 mm).

Paragraph 23.7.4.1 has been added in the 2019 edition based on the actual testing completed for exposed expanded Group A plastics. The sprinkler deflector was 14 in. (350 mm) below the ceiling in this test, whereas other tests have used an 18 in. (450 mm) maximum deflector distance. This paragraph is an exception for the K-25.2 (360) sprinkler where the deflector is allowed to be installed at 18 in. (450 mm) per 14.2.10.1.3; see the commentary for 14.2.10.1.

23.7.5 The design area shall consist of the most hydraulically demanding area of 12 sprinklers.

23.7.6 The minimum operating pressure shall be either 30 psi (2.0 bar) or 60 psi (4.1 bar) based upon the applicable storage and ceiling height for the installation as follows:

EDUFIRE.IR

(1) 30 psi (2.0 bar) for storage heights up to 25 ft (7.6 m) with a maximum ceiling height of 30 ft (9.1 m)
(2) 60 psi (4.1 bar) for storage heights up to 25 ft (7.6 m) with a maximum ceiling height of 40 ft (12 m)

23.7.7 The minimum aisle width shall be 8 ft (2.4 m).

23.7.8 The rack shall have a solid vertical barrier of ⅜ in. (10 mm) plywood or particleboard, .78 mm sheet metal, or equivalent, from face of rack to face of rack, spaced at a maximum of 16.5 ft (5.0 m) intervals.

The vertical barrier concept, which was added in the 2016 edition, is recognized as the alternative protection scheme and the exposed expanded Group A plastic protection scheme. Exhibit 23.2 shows the vertical barriers after a fire test. The barriers are integral to this approach, and an inspection for their integrity should be added to inspection, testing, and maintenance (ITM) programs for buildings.

23.7.8.1 The vertical barrier shall extend from a maximum of 4 in. (100 mm) above the floor to the maximum storage height.

23.7.8.2 The plan area of storage between vertical barriers and aisles shall not exceed 124 ft2 (12 m^2).

23.7.8.3 The vertical barrier shall extend across the longitudinal flue.

Exhibit 23.3 shows the vertical barrier extended across the longitudinal flue.

23.7.8.4 Commodity shall be permitted to extend a nominal 4 in. (102 mm) beyond the vertical barrier at the aisle.

EXHIBIT 23.2 Noncombustible Barriers with the Commodity Removed. (Courtesy of UL)

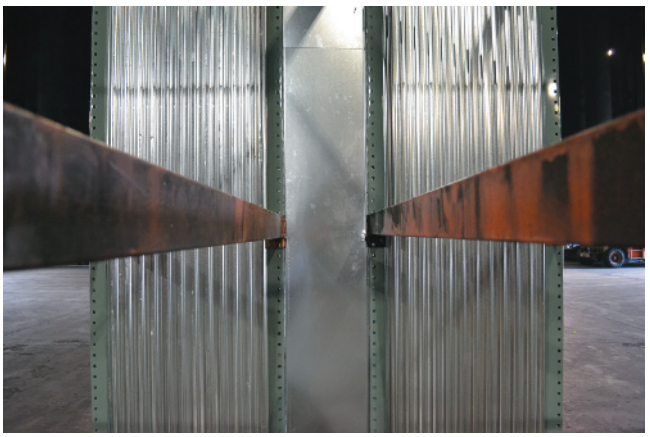

EXHIBIT 23.3 Vertical Barrier Across the Longitudinal Flue. (Courtesy of UL)

N 23.8 ESFR Protection of Rack Storage of Rubber Tires.

Sprinkler discharge and area of application shall be in accordance with Table 23.8.

The criteria for rubber tire storage being protected with ESFR sprinklers can be found in Table 23.8. Note that the table contains protection for a wide range of storage arrangements, including laced tire storage,

EDUFIRE.IR

which is the most difficult tire arrangement to protect. In a laced tire array, one tire is set at an angle into the hole of a tire below it. Another tire is then inserted at a right angle to that one with its tread in the hole of the tire below it (see Exhibit 23.4). Because the tire above blocks sprinkler discharge to the tire below, the laced array is extremely challenging to protect. ESFR sprinklers can protect laced arrays, but the discharge must be increased from the typical 12 sprinklers to 20 sprinklers (five sprinklers on four branch lines) with a minimum design area of 1600 ft^2 (149 m^2). Unlike other commodities protected with ESFR sprinklers, a rubber tire storage fire is only controlled rather than suppressed.

The design criteria in Table 23.8 must be selected based on the variables in the first five main columns of the table: piling method, pile height, maximum building height, nominal K-factor, and orientation. The user selects the maximum pile height, which would include the proposed storage height for the facility, and checks to see if the proposed ceiling/roof deck height is within the allowable maximum permitted for that selection. If it is not, a higher ceiling/roof height selection must be made that is within the maximum allowed. The available sprinkler options can then be identified.

EXHIBIT 23.4 *Laced Tire Storage on Portable Racks. (Courtesy of Ford Motor Company)*

DESIGNER'S CORNER [23.8]

Why are 20 ESFR sprinklers required in the design area for protection of laced tire arrays? Aren't ESFR sprinklers designed for suppression with a smaller design area?

Rubber tires are an extremely difficult commodity to protect from a fire protection perspective. Tires are made from a material that burns quickly and releases more heat than most other combustible materials. What makes rubber tires most difficult is their shape. A fire that has burned into a tire is shielded from sprinkler spray by the round shape of the tire, and there is plenty of air around the tire to support combustion. Whether tires are stored on their treads or on their sides, they present a difficult fire problem.

Tires stored in a laced array are the most challenging fire scenario of all. A typical laced array is shown in Figure A.3.3.185(g). Note how the tires are interlocked, blocking most sprinkler discharge from above and creating significant air pockets that allow for continued combustion. This combination creates challenges for the sprinkler system.

Fire tests with ESFR sprinklers demonstrated that they were capable of protecting the laced tire array, but they could not sufficiently decrease the heat release rate to consider the protection "suppression." Still, the water discharge from the ESFR sprinklers was sufficient to cool the hot gasses coming from the fire and prevent structural damage. In addition, sufficient cooling was provided by the 20 sprinklers to prevent additional sprinklers from opening.

While a discharge of 20 sprinklers is unusual for ESFR sprinklers, it is not unheard of. Twenty K-14 sprinklers at a discharge pressure of 75 psi (5.2 bar) will need at least 2425 gpm (9180 L/min) for the sprinkler system, which is a great deal of flow. But it is still a better option than using spray sprinklers (CMDA) in accordance with Table 21.6.1(a) and the required 0.6 gpm/ft^2 (24.4 mm/min)] density over 5000 ft^2 (465 m^2) [minimum 3000 gpm (11,350 lpm)] or 0.9 gpm/ft^2 (36.7 mm/min) density over 3000 ft^2 (280 m^2) [minimum of 2700 gpm (10,220 lpm)].

When used to protect a laced tire array, ESFR sprinklers are not considered to be in a suppression-oriented condition, so the hose stream demand and duration requirements will be greater than with other ESFR installations. The hose stream demand must be increased to 500 gpm (1900 L/min), and the water supply duration must be increased to 3 hours.

EDUFIRE.IR

N **TABLE 23.8** *Early Suppression Fast-Response (ESFR) Sprinklers for Protection of Rubber Tires*

Piling Method	Pile Height	Maximum Building Height		Nominal K-factor	Orientation	Number of Sprinklers	Minimum Operating Pressure[a]	
		ft	m				psi	bar
Rubber tire storage, on-side or on-tread, in palletized portable racks, open portable racks, or fixed racks without solid shelves	Up to 25 ft (7.6 m)	30	9.1	14.0 (200)	Upright/pendent	12[a]	50	3.4
				16.8 (240)	Upright/pendent	12[a]	35	2.4
				22.4 (320)	Pendent	12[a]	25	1.7
				25.2 (360)	Pendent	12[a]	15	1.0
Rubber tire storage, on-side, in palletized portable racks, open portable racks, or fixed racks without solid shelves	Up to 25 ft (7.6 m)	35	11	14.0 (200)	Upright/pendent	12[a]	75	5.2
				16.8 (240)	Pendent	12[a]	52	3.6
				22.4 (320)	Pendent	12[a]	35	2.4
				25.2 (360)	Pendent	12[a]	25	1.7
On-tread, on-side, and laced tires in open portable steel racks or palletized portable racks	Up to 25 ft (7.6 m)	30	9.1	14.0 (200)	Pendent	20[b,c]	75	5.2
				16.8 (240)	Pendent	20[b,c]	52	3.6
Rubber tire storage, on-side, in palletized portable racks	Up to 25 ft (7.6 m)	40	12	16.8 (240)	Pendent	12	52	3.6
Rubber tire storage, on-tread, or laced in open portable steel racks	Up to 25 ft (7.6 m)	40	12	25.2 (360)	Pendent	12	40	2.8
On-tread, on-side, and laced tires in open portable steel racks or palletized portable racks	Up to 30 ft (9.1 m)	40	12	25.2 (360)	Pendent	12	75	5.2

Note: Wet systems only.

[a]The shape of the design area shall be in accordance with 23.6.3.

[b]Where used in this application, ESFR protection is expected to control rather than to suppress the fire.

[c]The design area shall consist of the most hydraulically demanding area of 20 sprinklers, consisting of five sprinklers on each of four branch lines. The design shall include a minimum operating area of 1600 ft^2 (149 m^2).

23.9 Early Suppression Fast-Response (ESFR) Sprinklers for Protection of Roll Paper Storage.

Where automatic sprinkler system protection utilizes ESFR sprinklers, hydraulic design criteria shall be as specified in Table 23.9. Design discharge pressure shall be applied to 12 operating sprinklers.

ESFR sprinklers are not subject to the requirement of 21.7.4 and are permitted to be ordinary-temperature rated when protecting roll paper storage.

The design criteria in Table 23.9 must be selected based on the variables in the table: ESFR K-factor, orientation, system type, building height, and the array coupled with the weight of the paper. Based on the information in the table, the user selects the maximum pile height, which would include the proposed storage height for the facility, and checks to see if the proposed ceiling/roof deck height is within the allowable maximum permitted for that selection. If it is not, a higher ceiling/roof height selection must be made that is within the maximum allowed. The available sprinkler options can then be identified.

EDUFIRE.IR

TABLE 23.9 *ESFR Sprinklers for Protection of Roll Paper Storage (Maximum Height of Storage Permitted)*

ESFR K-Factor	Orientation	System Type	Pressure		Building Height		Heavyweight						Mediumweight						Tissue All Arrays
							Closed		Standard		Open		Closed		Standard		Open		
			psi	bar	ft	m	ft	m	ft	m	ft	m	ft	m	ft	m	ft	m	
14.0 (201)	Upright/ pendent	Wet	50	3.4	30	9.1	25	7.6	25	7.6	25	7.6	25	7.6	25	7.6	25	7.6	NA
16.8 (242)	Upright/ pendent	Wet	35	2.4															
22.4 (322)	Pendent	Wet	25	1.7															
25.2 (363)	Pendent	Wet	15	1.0															
14.0 (201)	Upright/ pendent	Wet	75	5.2	35	11	30	9.1	30	9.1	30	9.1	NA		NA		NA		NA
16.8 (242)	Upright/ pendent	Wet	52	3.6															
16.8 (242)	Pendent	Wet	52	3.6	40	12	30	9.1	30	9.1	30	9.1	NA		NA		NA		NA
22.4 (322)	Pendent	Wet	40	2.7															
25.2 (363)	Pendent	Wet	25	1.7															
22.4 (322)	Pendent	Wet	50	3.4	45	14	30	9.1	30	9.1	30	9.1	NA		NA		NA		NA
25.2 (363)	Pendent	Wet	50	3.4															

NA: Not applicable.

23.10 Plastic Motor Vehicle Components.

Group A plastic automotive components and associated packaging material shall be permitted to be protected in accordance with Table 23.10.

TABLE 23.10 *ESFR Sprinkler Design Criteria K-25.2 (360) for Portable Racks (Closed Array[a]) Without Solid Shelves Containing Automotive Components*

Commodity	Maximum Storage Height		Maximum Ceiling/Roof Height		Type of System	Maximum Sprinkler Spacing[b]		Number of Design Sprinklers by Minimum Operating Pressure[c]		Maximum Deflector Distance Below Ceiling[d]		Hose Stream Allowance		Water Supply Duration (hours)
	ft	m	ft	m		ft²	m²	psi	bar	in.	mm	gpm	L/min	
Automotive components and associated packaging material	25	7.6	35	11	Wet	100	9.3	16 at 37 psi	16 at 2.5 bar	18	450	500	1900	2

[a]Portable rack array shall be tightly nested without any flue spaces.

[b]Sprinkler spacing can exceed 100 ft² (9 m²) where sprinklers are listed for larger spacing.

[c]System hydraulic design shall also be capable of delivering a discharge density of 0.60 gpm/ft² (24.4 mm/min) over the most hydraulically remote 4000 ft² (370 m²) area.

[d]Maximum deflector distance below ceiling shall be permitted to exceed 18 in. (450 mm) where sprinklers are listed for greater distances.

EDUFIRE.IR

Section 23.10 provides requirements for the protection of large exposed expanded plastic automotive components such as instrument panels. The fire tests referenced in A.20.4.11 were funded by the automotive industry to deal with the storage of such automotive parts in a specific manner not adequately covered in Sections 23.4 or 23.6. Use of these criteria requires K-25.2 (360) ESFR sprinklers.

N 23.11 Sprinkler Design Criteria for Storage and Display of Class I Through Class IV Commodities, Cartoned Nonexpanded Group A Plastics and Nonexpanded Exposed Group A Plastics in Retail Stores.

Section 23.11 contains design criteria for a storage configuration in retail store arrangements. The configuration matches an arrangement of a specific large national chain of stores. The configuration can protect any commodity between Class I and exposed nonexpanded Group A plastics, provided the arrangement conforms to the limitations in the option that is selected.

N **23.11.1** A sprinkler system with K-25.2 (360) ESFR sprinklers operating at a minimum pressure of 15 psi (1 bar) shall be permitted to protect single- and double-row racks with solid displays without the use of in-rack sprinklers in retail sales floors where the following conditions are met:

(1) Storage height shall not exceed 20 ft (6.1 m).
(2) Solid veneered particleboard/plywood displays shall be permissible, provided that all flues are maintained and only one display is installed per bay.
(3) A single display shall be permitted to have one or two solid horizontal or slanted members, and a solid back.
(4) Maximum roof height shall be 30 ft (9.14 m) in the protected area.
(5) Aisle widths shall be a minimum of 6 ft (1.8 m).
(6) Minimum transverse flue spaces of 3 in. every 10 ft (76 mm every 3.05 m) horizontally shall be provided.
(7) Minimum longitudinal flue spaces of 6 in. (150 mm) shall be provided for double-row racks.
(8) Maximum roof height shall be 30 ft (9.1 m) in the protected area.
(9) Maximum storage height shall be 22 ft (6.7 m).
(10) Aisle widths shall be a minimum of 8 ft (2.4 m).
(11) Minimum transverse flue spaces of 3 in. every 10 ft (75 mm every 3 m) horizontally shall be provided.
(12) Minimum longitudinal flue spaces of 6 in. (150 mm) shall be provided for double-row racks.
(13) Storage in the aisle shall be permissible, provided the aisle storage is no more than 4 ft (1.2 m) high and a minimum clear aisle of 4 ft (1.2 m) is maintained.

23.12 Protection of High Bay Records Storage.

The requirements in Section 23.12 for protecting high bay records storage, as shown in Exhibit 23.5, are based on the results of full-scale fire testing at Southwest Research Institute. These requirements implement the combination of ESFR ceiling-only sprinklers and the structural requirements for the shelving units as detailed in 23.12.3 to contain a fire. This combination of requirements is specifically intended to address not only the NFPA 13 criteria for protection of storage but also the conservative loss limitation criteria of 300 ft^3 (8.5 m^3) or less in a single fire event, which is required for protection of U.S. federal government archival records.

EDUFIRE.IR

EXHIBIT 23.5 High Bay Records Storage. (Courtesy of Spacesaver Corporation)

23.12.1* Mobile High Bay Records Storage. The requirements in this section shall be permitted to apply to ceiling-only sprinkler protection of paper products, including paper files, magazines, books, and similar paper documents in corrugated containers either closed or open top, to include corrugated totes, with no more than 5 percent plastics stored in mobile shelving units greater than 12 ft (3.7 m) and up to 34 ft (10 m) high and up to 30 shelving units (storage tiers) high, when the shelving unit structure meets all of the requirements in 23.12.3.

A.23.12.1 See Figure A.23.12.1.

23.12.2 Fixed High Bay Records Storage. High bay record storage shall be permitted to be fixed in place when meeting the limitations of 23.12.1 and 23.12.3.

23.12.3 A wet pipe sprinkler system with nominal K-25.2 (360) ESFR sprinklers operating at a minimum of 40 psi (2.7 bar) shall be provided. The shelving units shall be subject to the following limitations:

(1) Back-to-back storage shelving units each no greater than 36 in. (900 mm) deep separated by longitudinal flue space not less than 6 in. (150 mm) wide.
(2) Solid steel shelving units not exceeding 54 in. (1350 mm) wide separated by steel barriers mechanically fastened to upright steel framing that forms a transverse flue space not less than 3 in. (75 mm) wide.
(3) Upright steel framing not completely blocking transverse flue space between adjacent shelving units.
(4) Noncombustible shelving backstops and side shelf supports, also referred to as side box guides, projecting not less than 3 in. (75 mm) above the shelves and that prevent stored commodities from encroaching into transverse and longitudinal flue spaces.

EDUFIRE.IR

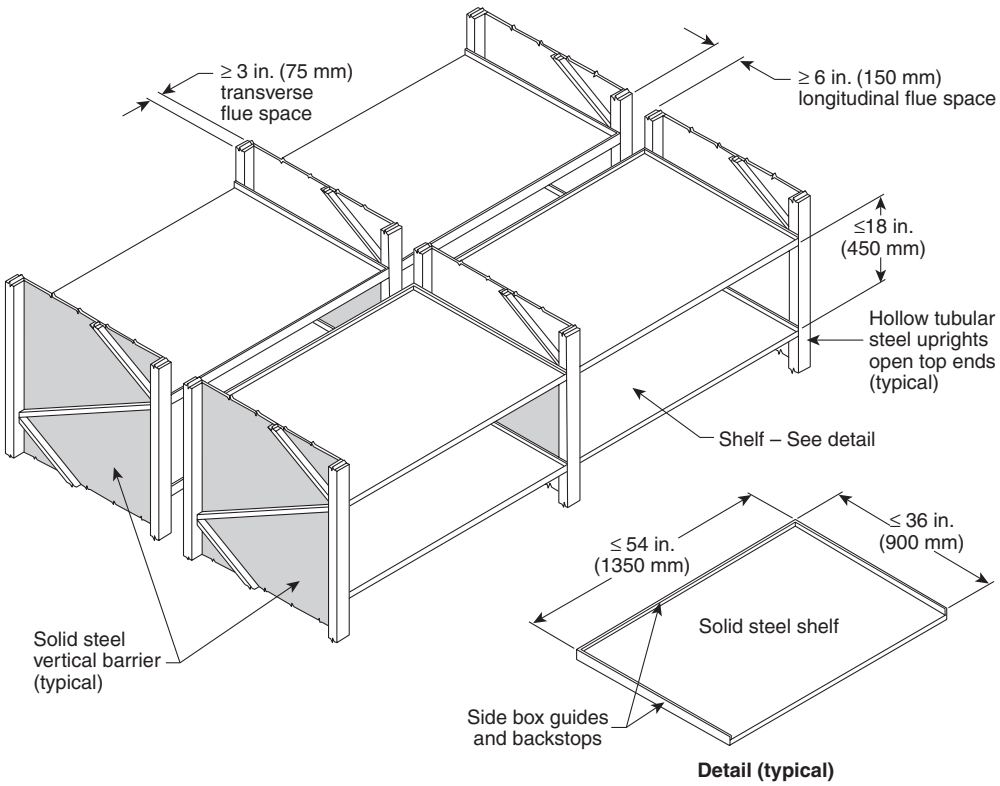

FIGURE A.23.12.1 *Typical Fixed High Bay Record Storage Structure.*

(5) Solid steel shelving not greater than 18 in. (450 mm) on centers vertically.
(6) Solid steel tops over top shelving units except at tops of transverse and longitudinal flue spaces.
(7) Open-ended, hollow tubular steel vertical (upright) shelving columns at top of shelving system.
(8) Shelving system framing and power tracks not exceeding 3 in. (75 mm) in width and not less than 1 ft (300 mm) on centers and not less than 6 in. (150 mm) below sprinkler deflectors.
(9) Minimum clearance of 36 in. (900 mm) above top solid steel cover over top storage shelf to the sprinkler deflector.
(10) Mobile shelving systems arranged to shift automatically to a uniform nominal 6 in. (150 mm) clearance clear space between mobile carriages supporting back-to-back shelving units. Systems shall be arranged to initiate the shifting 60 seconds after activation of ceiling-mounted smoke detectors or upon sprinkler flow, whichever is first. Shelving system carriage electrical motors shall be listed and integral to the mobile carriage systems for normal functions and shall not be required to have emergency power back-up.

In general, ESFR sprinklers are not permitted to be used to protect solid shelf racks without in-rack sprinklers. Subsection 23.12.3 is an exception to that rule, allowing ESFR sprinklers to be used to protect solid shelf racks with sprinklers only at the ceiling. This protection only works because of the unique design of the racks. The criteria should not be used to justify the use of ESFR sprinklers for other situations where solid shelves exist without in-rack sprinklers as required by Chapter 25.

EDUFIRE.IR

N 23.13 Slatted Shelves.

N **23.13.1*** Slatted rack shelves shall be considered equivalent to solid rack shelves where the shelving is not considered open rack shelving or where the requirements of 23.13.1 are not met. *(See Section C.20.)*

N **A.23.13.1** Slatting of decks or walkways or the use of open grating as a substitute for automatic sprinkler thereunder is not acceptable.

In addition, where shelving of any type is employed, it is for the basic purpose of providing an intermediate support between the structural members of the rack. As a result, it becomes almost impossible to define and maintain transverse flue spaces across the rack as required.

C.20 [21.8.1.1 and 23.13.1] A full-scale test program was conducted with various double-row rack storage arrangements of a cartoned Group A nonexpanded plastic commodity at the Factory Mutual Research Corporation (FMRC) test facility. The series of nine tests included several variations, one of which involved the use of the following four distinct shelving arrangements: slatted wood, solid wood, wire mesh, and no shelving. The results of the testing program, specifically Tests 1, 2, 3, and 5, clearly demonstrate the acceptable performance of sprinkler systems protecting storage configurations that involve the use of slated shelving as described in 21.8.1.1 and 23.13.1. As a result of the test program, Factory Mutual has amended FM Loss Prevention Data Sheet 8-9 to allow slatted shelving to be protected in the same manner as an open rack arrangement.

Complete details of the test program are documented in the FMRC technical report FMRC J. I. 0X1R0.RR, "Large-Scale Fire Tests of Rack Storage Group A Plastics in Retail Operation Scenarios Protected by Extra Large Orifice (ELO) Sprinklers."

Slatted shelves can form significant obstructions to ceiling sprinkler discharge. Where the area of solid slatted shelving exceeds 20 ft^2 (1.9 m^2), they should be treated like solid shelves, regardless of the type of sprinklers installed at the ceiling, unless the special rules of 23.13.2 or 21.9.1 are followed. If the slatted shelves are to be treated as solid shelves, all the rules of Section 25.6 apply, including the requirement of additional in-rack sprinklers below the slatted shelves.

N **23.13.2** A wet pipe system that is designed to provide K-14.0 (200) ESFR sprinklers operating at a minimum of 50 psi (3.4 bar), K-16.8 (240) sprinklers operating at a minimum of 32 psi (2.2 bar), or K-25.2 (360) ESFR sprinklers operating at a minimum of 15 psi (1.0 bar) shall be permitted to protect single- and double-row racks with slatted rack shelving racks where all of the following conditions are met:

(1) Sprinklers shall be K-14.0 (200), K-16.8 (240), or K-25.2 (360) ESFR.
(2) The protected commodities shall be limited to Class I through Class IV, Group B plastics, Group C plastics, cartoned (expanded and nonexpanded) Group A plastics, and exposed (nonexpanded) Group A plastics.
(3) Slats in slatted rack shelving shall be a minimum nominal 2 in. (50 mm) thick by maximum nominal 6 in. (150 mm) wide with the slats held in place by spacers that maintain a minimum 2 in. (50 mm) opening between each slat.
(4) Longitudinal flue spaces shall not be required.
(5) Transverse flue spaces at least 3 in. (75 mm) wide shall be provided at least every 10 ft (3.0 m) horizontally.
(6) The aisle widths shall be at least 7½ ft (2.3 m).
(7) The maximum roof height shall be 30 ft (9.1 m).
(8) The maximum storage height shall be 20 ft (6.1 m).
(9) Solid plywood or similar materials shall not be placed on the slatted shelves so that they block the 2 in. (50 mm) spaces between slats, nor shall they be placed on the wire mesh shelves.

EDUFIRE.IR

The requirements in 23.13.2, including items (1) through (9), are the result of full-scale fire tests simulating the retail display of commodities stored on racks with slatted shelves. Rack storage configurations used in the testing included more shelving at lower levels within the reach of consumers and larger bulk storage, usually pallet loads, on the upper layers in a more traditional configuration. The tests showed that, when all nine conditions in 23.13.2 were met, in-rack sprinklers were not needed below slatted shelves. Critical to the performance of the ceiling sprinklers are the condition in item (3) of 23.13.2, which mandates a specific distance between slats, and the condition in item (5). Together, those openings in the racks allow water from the ceiling sprinklers to penetrate down through the racks to control or suppress fires in the rack structure.

References Cited in Commentary

Fire Protection Research Foundation, 1 Batterymarch Park, Quincy, MA 02169-7471.
Protection of Rack Stored Exposed Expanded Group A Plastics with ESFR Sprinklers and Vertical Barriers, November 2014.

EDUFIRE.IR

EDUFIRE.IR

Alternative Sprinkler System Designs for Chapters 20 Through 25

CHAPTER

24

REORGANIZATION NOTE

Chapter 24 in the 2019 edition was Chapter 21 in the 2016 edition of NFPA 13. The entire chapter was carried over and sections renumbered to replace the Chapter 21 prefix with the Chapter 24 prefix.

Chapter 24 provides a method for actual full-scale fire testing for specific storage arrangements under given maximum ceiling heights to develop more specific design requirements based on the performance of the sprinkler, with minimum safety factors applied to the test results. The design approaches are not limited to the specific name of the sprinkler technology. The detailed requirements of fire testing in this chapter provide manufacturers, laboratories, and end users with a clear path to plan research to be submitted to the Technical Committee on Sprinkler System Discharge Criteria for acceptance. There are many storage arrangements, commodity classification mixtures, and storage method configuration tests that will not qualify for use of the general rules in Chapter 20 through Chapter 23 and Chapter 25. Chapter 24 provides a location for inclusion of such specific testing.

Using an alternative design approach to the requirements in Chapter 20 through Chapter 23 and Chapter 25 might be desirable if specific test data on a storage arrangement of a particular commodity are available. The test data might allow for more flexibility in the design of the sprinkler system as well as a more economical design that is not otherwise available through the use of the more general requirements of Chapter 20 through Chapter 23 and Chapter 25. The number of operating design sprinklers is set by using the results of successful reasonable worst-case fire tests and applying a 50 percent safety factor, as well as the adherence to a minimum baseline number of sprinklers for the design area based on the allowable coverage area for the sprinkler.

The intent of this chapter is to set a basis to allow manufacturers to conduct full-scale fire tests and then submit the results of the tests to the NFPA 13 Technical Committee on Sprinkler System Discharge Criteria. If, upon review, the committee determines that the test results are successful and that the minimum criteria have been met, the sprinkler will be added to the tables in Chapter 24. The first manufacturer to establish criteria — K-factor, orientation, response time index (RTI) rating, sprinkler spacing type, and temperature rating — with a specific type of sprinkler and a given commodity/storage arrangement will establish the design criteria for that particular combination. Other manufacturers will be able to have their sprinklers used for the same commodity/storage arrangement, but the design must adhere to the first manufacturer's discharge criteria. It was not the desire of the committee to have varying design criteria for different manufacturers producing the same type of sprinkler. The structure of Chapter 24 is an attempt by the committee to encourage new development while establishing some degree of standardization.

24.1* General.

A.24.1 The intent of this chapter is to provide protection options for the commodity hazards and storage arrangements outlined in Chapters 20 through 25 based on the characteristics of the sprinkler, such as K-factor, orientation, RTI rating, sprinkler spacing type and temperature rating, and using a design format of number of sprinklers at a minimum operating pressure.

EDUFIRE.IR

The protection options offered in this chapter will be based on the results of full-scale fire testing, as outlined in A.24.2 or A.24.3, while incorporating a minimum 50 percent safety factor into the number of sprinklers provided in the design. The intent of this chapter is to offer protection options using sprinklers having a nominal K-factor of 11.2 (160) or higher.

24.1.1 Sprinklers intended to protect storage fire risks shall be permitted to be installed using water supply design criteria that are different from the design criteria specified for the sprinklers described in Chapters 20 through 23 and 25 when specifically listed for such use within the limitations described in this chapter.

24.1.2 The requirements of Chapters 20 through 23 and 25 shall apply unless modified by this chapter.

24.1.2.1 Sprinklers having standard coverage areas that require up to 20 sprinklers to be included in the hydraulic calculation shall be installed in accordance with 14.2.3, 14.2.4, 14.2.4.1, and 20.6.5.

24.1.2.1.1 Quick-response sprinklers shall also be installed in accordance with 14.2.5.1 and 14.2.5.2.

24.1.2.2 Sprinklers having extended coverage areas that require up to 10 sprinklers to be included in the hydraulic calculation shall be installed in accordance with 14.2.3, 14.2.4, 14.2.4.1, and 20.6.5.

24.1.2.2.1 Quick-response sprinklers shall also be installed in accordance with 14.2.5.1 and 14.2.5.2.

For designs that include a limited number of sprinklers (20 or fewer for standard coverage sprinklers and 10 or fewer for extended coverage sprinklers), the application of certain installation rules typically associated with early suppression fast-response (ESFR) sprinklers is mandated. These rules include the following restrictions for the use of such designs:

1. Limited to roof slope of 2 in 12 or less (14.2.3)
2. Limited to buildings with unobstructed or obstructed construction (14.2.4)
3. Where beam depth exceeds 12 in. (300 mm), installation of sprinklers required within every beam channel (14.2.4.1)
4. Limited use of roof vents and draft curtains (14.2.5.1, 14.2.5.2, and 20.6.5)

24.1.3 The in-rack protection requirements of Chapter 25 shall apply when storage racks are equipped with solid shelves, and in-rack sprinklers are required per the applicable chapter.

The design criteria outlined in Chapter 24 are based on the fire testing without the installation of solid shelves. However, when solid shelves are used within a rack storage array, the addition of in-rack sprinklers is required by Chapter 20 through Chapter 23. Based on the limited number of operating sprinklers allowed by Chapter 24 for a design, the installation of in-rack sprinklers beneath every level of storage under the highest level of solid shelf installation is required. The hydraulic design of such installations is required to comply with 25.6.1. Alternatively, designs complying with 25.8 can be used where applicable.

24.1.4 The requirements of the applicable chapter shall apply when ceiling-only protection options are not available per this chapter.

24.1.5 The design criteria in this chapter shall not be used to permit a reduction in the water supply requirements for in-rack sprinkler protection.

24.1.6 A series of large-scale fire tests involving challenging test scenarios that address the range of variables associated with the intended application of the sprinkler shall be conducted

EDUFIRE.IR

to evaluate the ability of the sprinkler to protect storage fire risks that are representative of those described in the manufacturer's installation and design parameter instructions and referenced in the listing.

To establish the discharge criteria for the sprinklers in Chapter 24, reasonable worst-case fire tests had to be conducted. The Technical Committee on Sprinkler Systems Discharge Criteria wanted to review the fire tests to ensure that the tests represented reasonable worst-case scenarios. Factors affecting sprinkler performance during fires include more than just commodity classification. Ignition location, storage height, clearance to ceiling, aisle width, and storage configuration all play a role in determining whether sprinklers will be successful at providing fire suppression or control. The information contained in A.24.2 and A.24.3 establish necessary minimum test parameters.

24.1.7 The manufacturer's installation and design parameter instructions for these sprinklers shall specify in a standardized manner the end-use limitations and sprinkler system design criteria including at least the following:

(1) Commodity or commodities to be protected
(2) Storage arrangements allowed
(3) Installation guidelines including obstruction and ceiling construction limitations
(4) Maximum ceiling and storage heights with associated minimum operating pressures and number of sprinklers required to be included in the hydraulic calculation
(5) Hose stream allowance and duration

Subsection 24.1.7 provides significant flexibility for the testing of specific storage arrangements while providing minimum requirements for laboratories and manufacturers to include specific installation limits in the listings and installation guides, respectively.

24.1.8 The number of sprinklers to be used in the sprinkler system design shall be based on the worst-case result obtained from the full-scale fire test series increased by a minimum 50 percent.

24.1.8.1 Regardless of the number of sprinklers that operated during the worst-case full-scale fire test, the number in the sprinkler system demand shall be no less than one of the following:

(1) Twelve sprinklers for standard coverage sprinklers
(2) Eight sprinklers for extended-coverage sprinklers based on a spacing of 12 ft × 12 ft (3.7 × 3.7 m)
(3) Six sprinklers for extended-coverage sprinklers based on a spacing of 14 ft × 14 ft (4.3 m × 4.3 m)

Currently, there is no additional mandatory safety factor applied to the fire test results used in the development of Chapter 20 through Chapter 23 and Chapter 25. In the past, the Technical Committee on Sprinkler System Discharge Criteria and laboratories have applied a range of safety factors from 0 percent to 200 percent, based on the name of the technology. Subsection 24.1.8 provides a clear minimum safety factor applied to the fire test results for the application of this chapter that is not relative to the name of the sprinkler, provided the absolute minimum defined in 24.1.8.1 is also applied.

24.1.8.2 Once the number of sprinklers for a demand area has been established, the minimum operating area, based on the proposed sprinkler spacing, shall not be less than 768 ft^2 (71 m^2).

Regardless of the full-scale fire testing, the Technical Committee on Sprinkler System Discharge Criteria established in 24.1.8.2 an absolute minimum design area for any technology to prevent closely spaced sprinklers from being bunched together and creating the potential for a larger number of operating sprinklers than that specified. As an example of this, consider an extended coverage sprinkler with a six-sprinkler design in accordance with 24.1.8.1, which would require more sprinklers in the design area if the actual spacing was 10 ft by 10 ft (3.0 m by 3.0 m) [100 ft^2 (9.3 m^2)]. In that case, a minimum of eight sprinklers would be required in the design area.

EDUFIRE.IR

24.1.8.3 The design area and number of sprinklers calculated on a branch line shall be in accordance with 27.2.4.2 using an area of sprinkler operation equal to the required number of operating sprinklers and the maximum allowable coverage for the specific design criteria being utilized.

The number of sprinklers required in the design area is provided in the tables in this chapter. However, the user is not given the arrangement (number of sprinklers to calculate on a branch line) for the design area. For that information, the user must go to 27.2.4.2 and calculate a design area by multiplying the number of sprinklers from the applicable table by the maximum allowable area of coverage per sprinkler for the specific sprinkler for which the design was selected. Then, the number of sprinklers on the branch line is calculated by multiplying 1.2 by the square root of the calculated design area.

For example, consider rack storage of Class IV commodities stored 25 ft (7.6 m) high in a building 30 ft (9.1 m) high (with noncombustible unobstructed ceiling construction) that is protected with a wet pipe sprinkler system using pendent K-25.2 (K-360) extended coverage sprinklers spaced at a maximum of 14 ft × 14 ft (4.3 m × 4.3 m). Table 24.3.1 would require six sprinklers in the design area and maximum spacing of 14 ft × 14 ft (4.3 m × 4.3 m), or 196 ft^2 (18.2 m^2) per sprinkler. Multiplying the number of sprinklers (6) by 196 ft^2 (18.2 m^2) per sprinkler gives the user an effective design area of 1176 ft^2 (109 m^2). Per the requirement in 27.2.4.2, the square root of the effective design area is multiplied by 1.2 to get the length of the design area parallel to the branch line. In this case, it would be 41.2 ft (12.6 m).

$$\sqrt{1176} = 34.3$$

$$34.3 \times 1.2 = 42.16, \text{ rounded up to } 41.2$$

If the sprinklers are installed with 14 ft (4.3 m) between each sprinkler on the branch line, it would take three sprinklers to cover 41.2 ft (12.6 m), so three sprinklers would be needed on the most remote branch line, and three sprinklers would be needed on the second most remote branch line to make up the six-sprinkler design area required by Table 24.3.1.

24.1.9 Listed storage sprinklers that are not specifically referenced in Sections 24.2 and 24.3 but are tested in accordance with Chapter 24 with system design criteria based upon Sections 24.1, 24.4, and 24.5 shall be permitted to be used in accordance with their listing limitations, where approved.

Subsection 24.1.9 provides specific allowance for the use of listed storage sprinklers that are not included in Sections 24.2 and 24.3 but that have been successfully tested in accordance with A.24.2 or A.24.3, provided the design and installation comply with Sections 24.1, 24.4, and 24.5, the parameters of the specific testing have been completed, and the application is approved by the authority having jurisdiction.

24.2* Sprinkler Design Criteria for Palletized and Solid-Piled, Storage of Class I Through Class IV and Plastic Commodities.

A.24.2 The protection options offered in Section 24.2 are intended to be based on the results of full-scale fire tests conducted at a recognized testing laboratory using the standardized testing methods established by the testing laboratory and supplemented within this chapter.

Protection options for this chapter can be based on storage arrangements other than palletized, solid piled, bin box, shelf storage, or back-to-back shelf storage, provided that the tested storage arrangement (such as rack storage) is deemed more hazardous than the storage arrangements outlined for this chapter.

EDUFIRE.IR

Ceiling-level sprinkler system designs for this chapter should include a series of tests to evaluate the ability of the sprinkler to control or suppress a fire under a range of test variables for the commodity to be protected when maintained in a storage arrangement applicable to Section 24.2. The sprinkler standards referenced in Table A.7.1.1 provide detailed information regarding representative test commodities, measurement of steel temperatures, and the construction of igniters used to initiate the fire.

Test parameters to be held constant during the test series should include at least the following:

(1) Minimum operating pressure of the sprinklers
(2) Highest commodity hazard that will apply to the protection option
(3) Storage arrangement type

Test parameters that can vary during the test series should include at least the following:

(1) Ignition locations relative to the overhead sprinklers including the following:
    (a) Under one sprinkler
    (b) Between two sprinklers on the same branch line
    (c) Between four sprinklers
    (d) ADD analysis can be used to choose either A.24.2(1)(b) or A.24.2(1)(c)
(2) Maximum ceiling height *(see Table A.24.2 for ceiling height variance)*; representative tests at each ceiling height limitation that has a discrete minimum operating pressure or number of sprinklers required to be included in the hydraulic calculation
(3) Storage heights that are based on the following clearances between the deflector of the ceiling-level sprinkler and the top of storage:
    (a) Minimum clearance, which is typically 3 ft (900 mm)
    (b) Nominal 10 ft (3.0 m) clearance
    (c) Nominal 20 ft (6.1 m) clearance for maximum ceiling heights of 40 ft (12 m) or higher
(4) Minimum and maximum temperature ratings
(5) Minimum and maximum sprinkler spacing
(6) Maximum sprinkler distance below the ceiling when greater than 12 in. (300 mm).

See Figure A.24.2 for an example of a nominal 25 ft (7.6 m) high palletized storage fire test arrangement. See Table A.24.2 for a typical large-scale fire test series to investigate the performance of a sprinkler covered by this chapter having a standard coverage area and a discrete minimum operating pressure for a 30 ft (9.1 m) ceiling height.

In addition to determining the number of operated sprinklers, the maximum 1 minute average steel temperature measured above the fire should not exceed 1000°F (538°C), and there should be no sustained combustion at the far end of the main test array and at the outer edges of the target arrays during each test. In addition, no sprinklers should operate at the outer edges of the installed sprinkler system.

The number of sprinklers to be used in the sprinkler system design will be based on the worst-case result obtained from the full-scale fire test series increased by a minimum 50 percent. Regardless of the number of sprinklers that operated during the worst-case full-scale fire test, the number in the sprinkler system demand will be no less than 12 sprinklers for standard coverage sprinklers or six sprinklers for extended coverage sprinklers.

24.2.1 Protection of palletized and solid-piled storage of Class I through Class IV and cartoned nonexpanded plastic commodities shall be permitted to be protected in accordance with Table 24.2.1.

EDUFIRE.IR

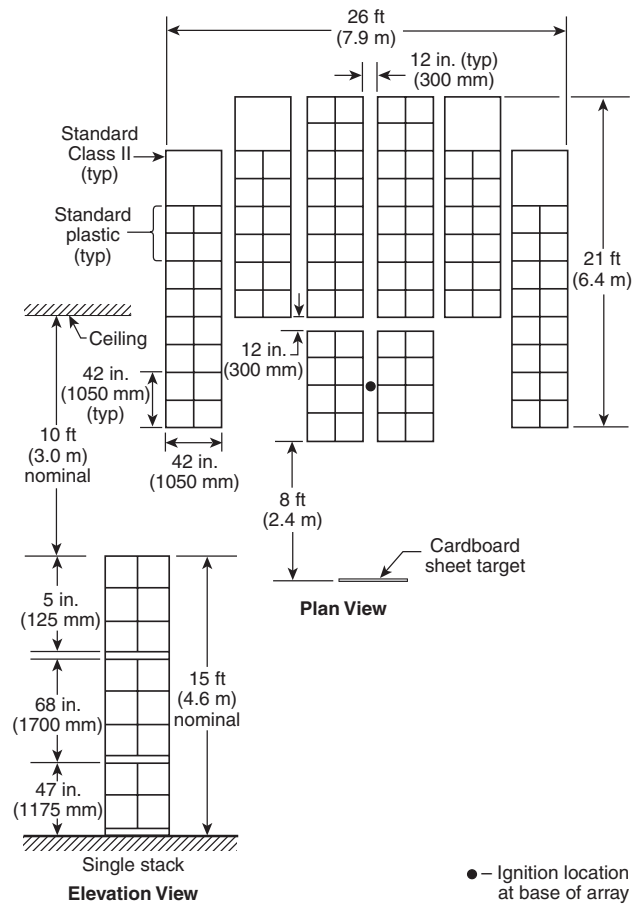

FIGURE A.24.2 *Typical Example of 15 ft (4.6 m) Palletized Storage Full-Scale Fire Test Arrangement.*

TABLE A.24.2 *Typical Example of 25 ft (7.6 m) Palletized Storage Under 30 ft (9.1 m) Ceiling Full-Scale Fire Test Series on Simulated Wet-Type Sprinkler System (considers ADD results)*

Parameter	*Test 1*	*Test 2*	*Test 3*	*Test 4*
Storage type	Palletized	Palletized	Palletized	Palletized
Nominal storage height, ft (m)	20 (6.1)	25 (7.6)	20 (6.1)	20 (6.1)
Nominal ceiling height, ft (m)	30 (9.1)	Adjusted to achieve minimum sprinkler deflector to commodity clearance	30 (9.1)	30 (9.1)
Sprinkler temperature rating	Minimum temperature rating	Maximum temperature rating	Minimum temperature rating	Minimum temperature rating
Nominal deflector to ceiling distance, in. (cm)	Maximum specified by manufacturer	Maximum specified by manufacturer	Maximum specified by manufacturer	Maximum specified by manufacturer
Sprinkler spacing	Maximum permitted by NFPA 13	Maximum permitted by NFPA 13	Minimum permitted by NFPA 13	Maximum permitted by NFPA 13
Nominal discharge pressure, psig (kPa)	Minimum operating	Minimum operating	Minimum operating	Minimum operating
Ignition location	Under one	Between two on same branch line or between four	Under one	Between two on same branch line or between four
Test duration, minutes	30	30	30	30

EDUFIRE.IR

TABLE 24.2.1 *Extended Coverage, CMSA [K-factor 25.2 (360)] Sprinkler Design Criteria for Palletized and Solid-Piled Storage of Class I Through Class IV and Cartoned Nonexpanded Plastic Commodities*

Storage Arrangement	*Commodity Class*	*Maximum Storage Height*		*Maximum Ceiling/ Roof Height*		*K-Factor/ Orientation*	*Type of System*	*Number of Design Sprinklers*	*Minimum Operating Pressure*	*Maximum Coverage Area*
		ft	*m*	*ft*	*m*					
Palletized and solid-piled	Class I through Class IV, encapsulated and nonencapsulated, and cartoned nonexpanded plastics	20	6.1	30	9.1	25.2 (360) Upright/pendent	Wet	6	30 psi (2.1 bar)	12 ft × 12 ft (3.7 m × 3.7 m) 144 ft² (13 m²)
		20	6.1	30	9.1	25.2 (360) Upright/pendent	Wet	6	30 psi (2.1 bar)	14 ft × 14 ft (4.3 m × 4.3 m) 196 ft² (18 m²)
		25	7.6	30	9.1	25.2 (360) Upright/pendent	Wet	6	30 psi (2.1 bar)	12 ft × 12 ft (3.7 m × 3.7 m) 144 ft² (13 m²)
		25	7.6	30	9.1	25.2 (360) Upright/pendent	Wet	6	30 psi (2.1 bar)	14 ft × 14 ft (4.3 m × 4.3 m) 196 ft² (18 m²)
		25	7.6	35	11	25.2 (360) Upright/pendent	Wet	8	40 psi (2.7 bar)	12 ft × 12 ft (3.7 m × 3.7 m) 144 ft² (13 m²)
		25	7.6	35	11	25.2 (360) Upright	Wet	8	40 psi (2.8 bar)	14 ft × 14 ft (4.3 m × 4.3 m) 196 ft² (18 m²)
		30	9.1	35	11	25.2 (360) Upright/pendent	Wet	8	40 psi (2.8 bar)	12 ft × 12 ft (3.7 m × 3.7 m) 144 ft² (13 m²)
		30	9.1	35	11	25.2 (360) Upright	Wet	8	40 psi (2.8 bar)	14 ft × 14 ft (4.3 m × 4.3 m) 196 ft² (18 m²)

24.3* Sprinkler Protection Criteria for Open-Frame Rack Storage of Class I Through Class IV and Plastic Commodities.

A.24.3 The protection options offered in Section 24.3 are intended to be based on the results of full-scale fire tests conducted at a recognized testing laboratory using the standardized testing methods established by the testing laboratory and supplemented within this chapter.

Ceiling-level sprinkler system designs for this chapter should include a series of tests to evaluate the ability of the sprinkler to control or suppress a fire under a range of test variables for the commodity to be protected when maintained in a storage arrangement applicable to Section 24.3. The sprinkler standards referenced in Table A.7.1.1 provide detailed information regarding representative test commodities, measurement of steel temperatures, and the construction of igniters used to initiate the fire.

Test parameters to be held constant during the test series should include at least the following:

(1) Minimum operating pressure of the ceiling-level sprinklers
(2) Highest commodity hazard that will apply to the protection option
(3) Storage arrangement type
(4) Minimum aisle width

EDUFIRE.IR

Test parameters that can vary during the test series should include at least the following:

(1) Ignition locations relative to the overhead sprinklers including the following:
   (a) Under one sprinkler
   (b) Between two sprinklers on the same branch line
   (c) Between four sprinklers
   (d) ADD analysis can be used to choose either A.24.3(1)(b) or A.24.3(1)(c)

(2) Maximum ceiling height *(see Table A.24.2 for ceiling height variance)*; representative tests at each ceiling height limitation that has a discrete minimum operating pressure or number of sprinklers required to be included in the hydraulic calculation

(3) Storage heights that are based on the following clearances between the deflector of the ceiling-level sprinkler and the top of storage:
   (a) Minimum clearance, which is typically 3 ft (900 mm)
   (b) Nominal 10 ft (3.0 m) clearance
   (c) Nominal 20 ft (6.1 m) clearance for maximum ceiling heights of 40 ft (12 m) or higher

(4) Minimum and maximum temperature ratings

(5) Minimum and maximum sprinkler spacing

(6) Maximum sprinkler distance below the ceiling when greater than 12 in. (300 mm)

Historical testing has indicated that a double-row rack storage arrangement is considered representative of single- and multiple-row rack storage. The ignition location relative to the sprinkler has been demonstrated to be a key variable associated with full-scale fire tests. The critical ignition scenarios include locating (1) one of the sprinklers directly above the center of the main storage array, (2) two of the sprinklers on the same branch line such that the mid-point between the two sprinklers is directly above the center of the storage array, and (3) four sprinklers (two each on adjacent branch lines) such that the geometric center point between the four sprinklers is located directly above the center of the main storage array. The igniters for this testing should be placed at the base of the storage array and offset from the center of the main array in the transverse flue space as illustrated in Figure A.24.3. Previous testing has demonstrated that an offset ignition location represents a challenging test scenario.

A double-rack storage array should be a nominal 32 ft (9.8 m) long with single-row target arrays located on each side of the main array. The sprinkler branch lines should be installed in a direction that is perpendicular to the longitudinal flue spacing of the storage arrangement, and the branch lines over the test array should be sized such that they represent the largest obstruction for upright-style sprinklers. See Figure A.24.3 for an example of a nominal 30 ft (9.1 m) high double-row rack storage fire test arrangement. See Table A.24.3(a) and Table A.24.3(b) for a typical full-scale fire test series to investigate the performance of a sprinkler covered by this chapter having a standard coverage area and a discrete minimum operating pressure for a 40 ft (12 m) ceiling height.

In addition to determining the number of operated sprinklers, the maximum 1 minute average steel temperature measured above the fire should not exceed 1000°F (538°C), and there should be no sustained combustion at the far end of the main test array and at the outer edges of the target arrays during each test. In addition, no sprinklers should operate at the outer edges of the installed sprinkler system.

The number of sprinklers to be used in the sprinkler system design will be based on the worst-case result obtained from the full-scale fire test series increased by a minimum 50 percent. Regardless of the number of sprinklers that operated during the worst-case full-scale fire test, the number in the sprinkler system demand will be no less than 12 sprinklers for standard coverage sprinklers or six sprinklers for extended coverage sprinklers.

Once the number of sprinklers for a demand area has been established, the minimum operating area, based on the proposed sprinkler spacing, cannot be less than 768 ft^2 (71 m^2).

EDUFIRE.IR

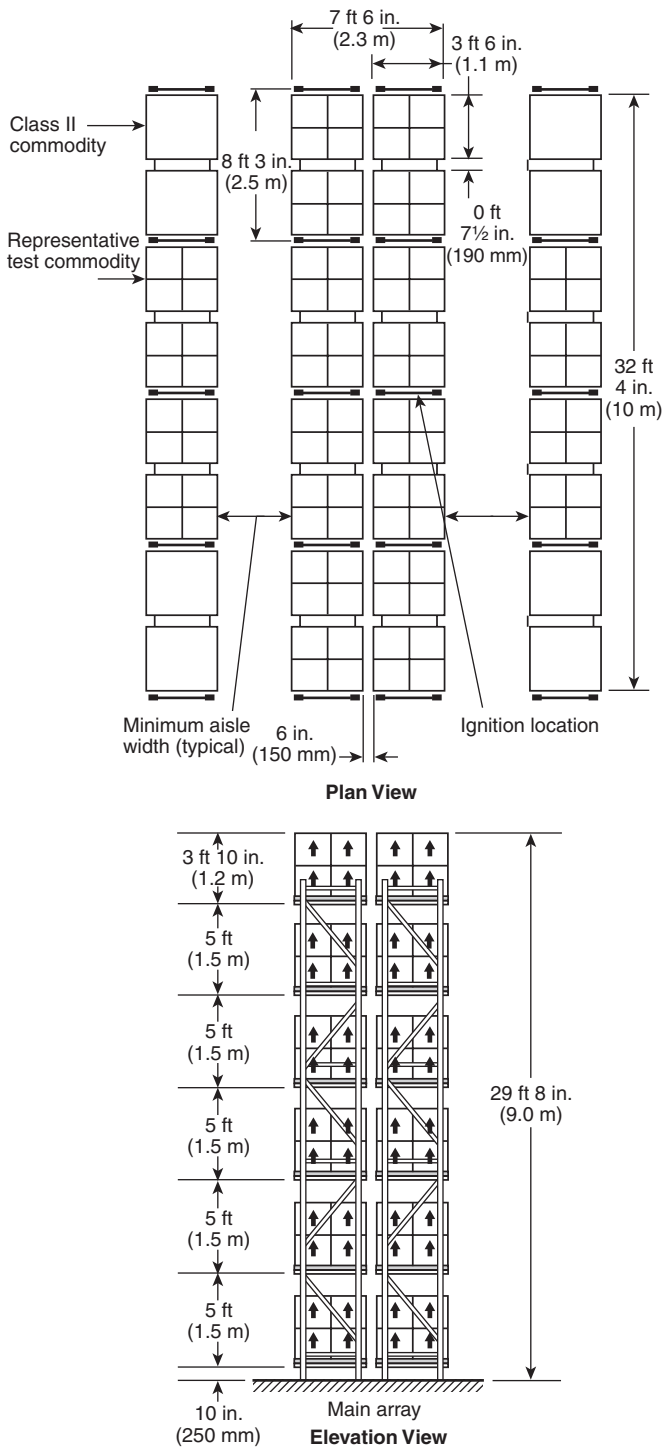

FIGURE A.24.3 *Typical Example of 30 ft (9.1 m) Double-Row Rack Storage Fire Test Arrangement.*

EDUFIRE.IR

TABLE A.24.3(a) *Typical Example of a 35 ft (10.7 m) Rack Storage Under a 40 ft (12 m) Ceiling Full-Scale Fire Test Series on a Simulated Wet-Type Sprinkler System (considers ADD results)*

Parameter	*Test 1*	*Test 2*	*Test 3*	*Test 4*
Storage type	Double-row rack	Double-row rack	Double-row rack	Double-row rack
Nominal storage height, ft (m)	30 (9.1)	35 (11)	30 (9.1)	20 (6.1)
Nominal ceiling height, ft (m)	40 (12)	Adjusted to achieve minimum sprinkler deflector to commodity clearance	40 (12)	40 (12)
Sprinkler temperature rating	Minimum temperature rating	Maximum temperature rating	Minimum temperature rating	Minimum temperature rating
Nominal deflector to ceiling distance, in. (mm)	Maximum specified by manufacturer	Maximum specified by manufacturer	Maximum specified by manufacturer	Maximum specified by manufacturer
Sprinkler spacing	Maximum permitted by NFPA 13	Maximum permitted by NFPA 13	Minimum permitted by NFPA 13	Maximum permitted by NFPA 13
Nominal discharge pressure, psig (kPa)	Minimum operating	Minimum operating	Minimum operating	Minimum operating
Ignition location	Under one	Between two on same branch line or between four	Under one	Between two on same branch line or between four
Test duration, minutes	30	30	30	30

TABLE A.24.3(b) *Typical Example of 35 ft (10.7 m) Rack Storage Under 40 ft (12 m) Ceiling Full-Scale Fire Test Series on a Simulated Wet-Type Sprinkler System*

Parameter	*Test 1*	*Test 2*	*Test 3*	*Test 4*
Storage type	Double-row rack	Double-row rack	Double-row rack	Double-row rack
Nominal storage height, ft (m)	30 (9.1)	35 (11)	30 (9.1)	20 (6.1)
Nominal ceiling height, ft (m)	40 (12)	Adjusted to achieve minimum sprinkler deflector to commodity clearance	40 (12)	40 (12)
Sprinkler temperature rating	Minimum temperature rating	Maximum temperature rating	Minimum temperature rating	Minimum temperature rating
Nominal deflector to ceiling distance, in. (mm)	Within 12 (300)	Maximum specified by manufacturer	Maximum specified by manufacturer	Maximum specified by manufacturer
Sprinkler spacing	10 × 10 (3.0 × 3.0)	10 × 10 (3.0 × 3.0)	10 × 10 (3.0 × 3.0)	10 × 10 (3.0 × 3.0)
Nominal discharge pressure, psig (kPa)	Minimum operating	Minimum operating	Minimum operating	Minimum operating
Ignition location	Under one	Between four	Between two on same branch line	Between two on same branch line
Test duration, minutes	30	30	30	30

24.3.1 Protection of single-, double-, and multiple-row racks without solid shelves of Class I through Class IV and cartoned nonexpanded plastic commodities shall be permitted to be protected in accordance with Table 24.3.1.

24.3.2 Protection of Class I through Class IV and cartoned nonexpanded plastic commodities stored on single-, double-, or multiple-row racks without solid shelves or solid-piled, palletized, storage arrangements shall be permitted to be protected in accordance with Table 24.3.2(a) or Table 24.3.2(b).

EDUFIRE.IR

TABLE 24.3.1 *Extended Coverage, CMSA [K-Factor 25.2 (360)] Sprinkler Design Criteria for Single-, Double-, and Multiple-Row Racks Without Solid Shelves of Class I Through Class IV and Cartoned Nonexpanded Plastic Commodities*

Storage Arrangement	Commodity Class	Maximum Storage Height		Maximum Ceiling/Roof Height		K-Factor/ Orientation	Type of System	Number of Design Sprinklers	Minimum Operating Pressure	Maximum Coverage Area
		ft	m	ft	m					
Single-, double-, and multiple-row racks without solid shelves (no open-top containers)	Class I through Class IV, encapsulated and nonencapsulated, and cartoned nonexpanded plastics	20	6.1	30	9.1	25.2 (360) Upright/ pendent	Wet	6	30 psi (2.1 bar)	12 ft × 12 ft (3.7 m × 3.7 m) 144 ft² (13 m²)
		20	6.1	30	9.1	25.2 (360) Upright/ pendent	Wet	6	30 psi (2.1 bar)	14 ft × 14 ft (4.3 m × 4.3 m) 196 ft² (18 m²)
		25	7.6	30	9.1	25.2 (360) Upright/ pendent	Wet	6	30 psi (2.1 bar)	12 ft × 12 ft (3.7 m × 3.7 m) 144 ft² (13 m²)
		25	7.6	30	9.1	25.2 (360) Upright/ pendent	Wet	6	30 psi (2.1 bar)	14 ft × 14 ft (4.3 m × 4.3 m) 196 ft² (18 m²)
		25	7.6	35	11	25.2 (360) Upright/ pendent	Wet	8	40 psi (2.6 bar)	12 ft × 12 ft (3.7 m × 3.7 m) 144 ft² (13 m²)
		25	7.6	35	11	25.2 (360) Upright	Wet	8	40 psi (2.6 bar)	14 ft × 14 ft (4.3 m × 4.3 m) 196 ft² (18 m²)
		30	9.1	35	11	25.2 (360) Upright/ pendent	Wet	8	40 psi (2.7 bar)	12 ft × 12 ft (3.7 m × 3.7 m) 144 ft² (13 m²)
		30	9.1	35	11	25.2 (360) Upright	Wet	8	40 psi (2.6 bar)	14 ft × 14 ft (4.3 m × 4.3 m) 196 ft² (18 m²)

TABLE 24.3.2(a) *CMSA K-25.2 Upright Standard Coverage Sprinkler Design Criteria for Single-, Double-, and Multiple-Row Racks Without Solid Shelves and Solid-Piled, Palletized Storage Arrangement of Class I Through IV and Cartoned Nonexpanded Plastic Commodities*

Storage Arrangement	Commodity Class	Maximum Storage Height		Maximum Ceiling/ Roof Height		K-Factor/ Orientation	System Type	Number of Design Sprinklers	Minimum Operating Pressure	Sprinkler Linear Spacing		Sprinkler Area Spacing	
		ft	m	ft	m					Min	Max	Min	Max
Solid-piled, palletized, and single-, double-, and multiple-row racks without solid shelves (no open-top containers)	Class I–IV encapsulated and nonencapsulated, and cartoned nonexpanded plastics	25	7.6	30	9.1	25.2 (360) Upright	Wet	12	20 psi (1.4 bar)	8 ft (2.4 m)	12 ft (3.6 m)	80 ft² (7.4 m²)	100 ft² (9.0 m²)

EDUFIRE.IR

TABLE 24.3.2(b) *CMSA K-25.2 Pendent Standard Coverage Sprinkler Design Criteria for Single-, Double-, and Multiple-Row Racks Without Solid Shelves and Solid-Piled, Palletized Storage Arrangement of Class I Through IV and Cartoned Nonexpanded Plastic Commodities*

Storage Arrangement	Commodity Class	Maximum Storage Height		Maximum Ceiling/ Roof Height		K-Factor/ Orientation	System Type	Number of Design Sprinklers	Minimum Operating Pressure	Sprinkler Linear Spacing		Sprinkler Area Spacing	
		ft	m	ft	m					Min	Max	Min	Max
Solid-piled, palletized, and single-, double-, and multiple-row racks without solid shelves (no open-top containers)	Class I–IV encapsulated and nonencapsulated, and cartoned nonexpanded plastics	25	7.6	30	9.1	25.2 (360) Pendent	Wet	12	15 psi (1.0 bar)	8 ft (2.4 m)	12 ft (3.6 m)	80 ft^2 (7.5 m^2)	100 ft^2 (9.0 m^2)

TABLE 24.3.3 *Standard Response Upright Sprinkler Design Criteria for Open Rack Storage of Class I Through Class III Commodities (Using High-Temperature-Rated Sprinklers)*

Storage Arrangement	Commodity Class	Maximum Storage Height		Maximum Ceiling/Roof Height		K-Factor/Orientation	Type of System	Number of Design Sprinklers	Minimum Operating Pressure	
		ft	m	ft	m				psi	bar
Rack storage without solid shelves (no open-top containers)	Class I, II, or III	35	10.6	40	12.1	25.2 (360)/Upright	Dry	24	15*	1*
		40	12.1	45	13.6	25.2 (360)/Upright	Dry	12	50†	3.5†

*25-second water delivery time maximum.

†20-second water delivery time maximum.

24.3.3 Protection of open rack storage of Class I through Class III commodities with dry pipe systems using standard response upright sprinkler design criteria using high-temperature-rated sprinklers shall be in accordance with Table 24.3.3.

24.3.3.1 For protection criteria using a minimum operating pressure of 15 psi (1 bar), a maximum water delivery time of 25 seconds shall be used.

24.3.3.2 For protection criteria using a minimum operating pressure of 50 psi (3.4 bar), a maximum water delivery time of 20 seconds shall be used.

24.4 Hose Stream Allowance and Water Supply Duration.

24.4.1 The minimum water supply requirements for a hydraulically designed occupancy hazard fire control sprinkler system shall be determined by adding the hose stream allowance from Table 24.4.1 to the water supply for sprinklers obtained from this chapter.

EDUFIRE.IR

TABLE 24.4.1 Hose Stream Allowance and Water Supply Duration

Sprinkler Type	Sprinkler Spacing Type	Number of Sprinklers in Design Area	Hose Stream Allowance		Water Supply Duration (minutes)
			gpm	L/min	
Control mode density/area and CMSA	Standard	Up to 12	250	950	60
		Over 12 to 15	500	1900	90
		Over 15 to 25	500	1900	120
		Over 25	500	1900	150
	Extended coverage	Up to 6	250	950	60
		Up to 8	250	950	60
		Over 6 to 8	500	1900	90
		Over 8 to 12	500	1900	120
		Over 12	500	1900	150
ESFR	Standard	Up to 12	250	950	60
		Over 12 to 15	500	1900	90
		Over 15 to 25	500	1900	120
		Over 25	500	1900	150

24.4.1.1 The water supply requirements for a hydraulically designed occupancy hazard fire control sprinkler system shall be available for the minimum duration specified in Table 24.4.1.

24.5 Minimum Obstruction Criteria.

NFPA 13 contains four different sets of obstruction criteria. In ascending order of difficulty to meet, they are as follows:

1. Standard spray sprinkler criteria (10.2.7)
2. Extended coverage sprinkler criteria (11.2.5)
3. CMSA sprinkler criteria (13.2.8)
4. ESFR sprinkler criteria (14.2.11)

The correct obstruction criteria to apply depend on two factors: the results of the full-scale fire tests and the number of operating sprinklers included in the design area. Where there is a small number of sprinklers included in the design area, the obstruction criteria become more critical because an extra operating sprinkler could overrun the system design area. As a result, where the sprinkler design area is small, the use of ESFR obstruction criteria would need to be followed. As the number of operating sprinklers becomes large enough, a relaxation of the obstruction rules consistent with CMSA obstruction rules is allowed. Additionally, if the results of the full-scale fire tests demonstrate that the sprinkler is less sensitive to certain obstructions, less difficult rules might also apply. Therefore, the user of Chapter 24 must read the manufacturer's data sheets carefully to understand fully which obstruction criteria to apply.

The intent of Chapter 24 is not to develop its own obstruction criteria but to reference other criteria already in NFPA 13 or more specific information contained in the listing for the sprinkler.

24.5.1 General. The installation guidelines for obstructions to ceiling-level sprinklers shall be in accordance with the requirements of Section 24.5 for sprinkler system designs obtained from this chapter.

24.5.2 Standard Coverage Spacing Sprinklers.

24.5.2.1 Sprinklers having standard coverage areas requiring up to 20 sprinklers to be included in the hydraulic calculation shall be installed in accordance with the obstruction

EDUFIRE.IR

criteria described in 14.2.11, unless large-scale fire testing is conducted with a representative obstruction below the sprinkler that demonstrates equivalent performance.

Smaller design areas allowed by this chapter assume the performance is based on limited obstructions to the sprinkler discharge. Subsection 14.2.11 details the obstruction rules for ESFR sprinklers, which allow only limited obstructions to discharge.

24.5.2.2 Control mode density/area (CMDA) and CMSA sprinklers having standard coverage areas requiring more than 20 sprinklers in the design area shall be installed in accordance with the obstructions to sprinkler discharge criteria described in 13.2.8.

Subsection 13.2.8 details the obstruction criteria for CMSA sprinklers, which allow for moderate obstructions to discharge. For design areas with more than 20 sprinklers, more obstructions are acceptable in the sprinkler discharge.

24.5.2.2.1 ESFR sprinklers having standard-coverage areas requiring more than 20 sprinklers in the design area shall be installed in accordance with the obstructions to sprinkler discharge criteria described in 14.2.11.

Designs that use ESFR sprinklers, regardless of the number of operating sprinklers, are required to meet the obstruction rules of 14.2.11.

24.5.2.2.2 Other obstruction criteria shall be acceptable if large-scale fire testing is conducted with a representative obstruction below the sprinkler that demonstrates equivalent performance.

Consistent with the intent of Chapter 24, full-scale fire testing is key to the design requirements. Obstruction criteria differing from 13.2.8 and 14.2.11 can be used provided the arrangement has been proven to be equivalent by large-scale fire testing.

24.5.3 Extended Coverage Spacing Sprinklers.

24.5.3.1 Sprinklers having extended coverage areas requiring up to 10 sprinklers to be included in the hydraulic calculation shall be installed in accordance with the obstruction criteria described in 11.2.5.1, 14.2.11.2, and 14.2.11.3, unless large-scale fire testing is conducted with a representative obstruction below the sprinkler that demonstrates equivalent performance.

Smaller design areas allowed by this chapter assume the performance is based on limited obstructions to the sprinkler discharge. Paragraph 24.5.3.1 combines the requirements for obstructions of extended coverage sprinklers (11.2.5.1) and ESFR sprinklers (14.2.11), which allow only limited obstructions to discharge.

24.5.3.2 CMDA and CMSA sprinklers having extended coverage areas requiring more than 10 sprinklers in the design area shall be installed in accordance with the obstructions to sprinkler discharge criteria described in 13.2.8 and 11.2.5.1.

The requirements in 13.2.8 and 11.2.5.1 combine the obstruction criteria for CMSA sprinklers and extended coverage sprinklers, which allow moderate obstructions to discharge. For design areas with more than 10 sprinklers, more obstructions are acceptable in the sprinkler discharge.

24.5.3.2.1 ESFR sprinklers having extended coverage areas requiring more than 10 sprinklers in the design area shall be installed in accordance with the obstructions to sprinkler discharge criteria described in 14.2.11.2 and 14.2.11.3.

Designs that use ESFR sprinklers, regardless of the number of operating sprinklers, are required to meet the obstruction rules of 14.2.11.2 and 14.2.11.3.

24.5.3.2.2 Other obstruction criteria shall be acceptable if large-scale fire testing is conducted with a representative obstruction below the sprinkler that demonstrates equivalent performance.

EDUFIRE.IR

Consistent with the intent of Chapter 24, full-scale fire testing is the key to the design requirements. Obstruction criteria differing from 13.2.8 and 14.2.11 can be used provided the arrangement has been proven to be effective by large-scale fire testing.

24.5.3.2.3 When utilizing upright CMSA, CMDA, or ESFR sprinklers, any continuous obstruction 4 in. (100 mm) or less shall be permitted to be ignored.

In recognition of the fact that when upright sprinklers are tested, the pipe to which they are attached is an obstruction to discharge, the full-scale results account for an obstruction up to 4 in. (100 mm) within the most critical part of the discharge pattern.

EDUFIRE.IR

EDUFIRE.IR

CHAPTER

25

Protection of Rack Storage Using In-Rack Sprinklers

REORGANIZATION NOTE

Chapter 25 is new to the 2019 edition and consolidates all the in-rack sprinkler design criteria into one chapter, eliminating redundancy and confusion. Chapters 21 through 24 are now dedicated to ceiling-only sprinkler protection options, with Chapter 25 addressing protection options that incorporate in-rack sprinklers. This allows users of Chapter 25 to determine all their protection options for in-rack sprinklers — and the accompanying ceiling sprinkler system — without having to leave the chapter.

The requirements in Chapter 20 apply to all storage occupancies, including those covered in Chapter 25. Using the requirements from Chapter 20 in conjunction with those of this chapter is critical to the development of a correct and efficient fire sprinkler system design. Chapter 20 contains both the allowances and the restrictions that can affect the system design and that must be considered where applicable. For example, 20.6.1 would limit the design in Chapter 25 to ceiling slopes not exceeding 2 in 12 (16.7 percent), restricting the applicability of the design criteria.

25.1 General Requirements of In-Rack Sprinklers.

25.1.1 Scope. This chapter shall apply where rack storage of Class I through Class IV commodities, Group A plastic commodities, or rubber tires will be protected with in-rack sprinklers. Applicable sections shall include the following:

(1) See Section 25.2 for the ceiling-level sprinkler design criteria applicable to designs with in-rack sprinklers.
(2) See Section 25.3 for in-rack sprinkler characteristics.
(3) See Section 25.4 for vertical spacing and location of in-rack sprinklers.
(4) See Section 25.5 for horizontal location and spacing of in-rack sprinklers.
(5) See Section 25.6 for protection of racks with solid shelves.
(6) See Section 25.7 for horizontal barriers in combination with in-rack sprinklers.
(7) See Section 25.8 for in-rack sprinkler arrangements and designs independent of ceiling-level sprinklers.
(8) See Section 25.9 for in-rack sprinkler arrangements in combination with CMDA sprinklers at ceiling level.
(9) See Section 25.10 for in-rack sprinkler arrangements in combination with CMSA sprinklers at ceiling level.
(10) See Section 25.11 for in-rack sprinkler arrangements in combination with ESFR sprinklers at ceiling level.
(11) See Section 25.12 for design criteria for in-rack sprinklers in combination with ceiling-level sprinklers.

EDUFIRE.IR

25.1.2 Open Rack Storage.

25.1.2.1 The in-rack sprinkler arrangements as well as the ceiling and in-rack sprinkler design criteria for rack storage in this chapter shall be based on open rack configurations as defined in 3.3.140 unless indicated otherwise.

Paragraph 25.1.2.1 does not mean that there are no in-rack sprinkler protection options for rack configurations that have solid shelves, but rather that the in-rack sprinkler protection options shown in all sections in the chapter, except for Section 25.6, involve open rack configurations. For those racks having solid shelves, in-rack sprinkler protection options are provided in Section 25.6.

25.1.3 In-Rack Sprinkler System.

25.1.3.1 In-Rack Sprinkler System Size. The area protected by a single in-rack sprinkler system shall not exceed 40,000 ft^2 (3720 m^2) of floor area occupied by the racks, including aisles, regardless of the number of in-rack sprinkler levels.

25.1.3.2* In-Rack Sprinkler System Control Valves.

A.25.1.3.2 In-rack sprinklers and ceiling sprinklers selected for protection should be controlled by at least two separate indicating valves and drains. In higher rack arrangements, consideration should be given to providing more than one in-rack control valve to limit the extent of any single impairment.

The control valves addressed in 25.1.3.2 are intended to allow isolation of the in-rack system from the ceiling system, as indicated in Exhibit 25.1. In-rack sprinklers are susceptible to damage due to their location. Control valves are required to allow the ceiling system to remain in service while an in-rack sprinkler is replaced. Additionally, when the ceiling system is out of service, the valves are to be arranged so that the in-rack system remains operational.

25.1.3.2.1 Unless the requirements of 25.1.3.2.2 or 25.1.3.2.3 are met, separate indicating control valves and drains shall be provided and arranged so that ceiling and in-rack sprinkler systems can be controlled independently.

Sprinklers and sprinkler piping installed in pallet racks are more likely to experience damage from forklifts or other material-handling equipment. Providing a separate control valve allows the piping to be shut down quickly without impairing ceiling-level protection for the entire area of the building.

25.1.3.2.2 A separate indicating control valve shall not be required where 20 or fewer in-rack sprinklers are supplied by any one ceiling sprinkler system.

Paragraph 25.1.3.2.2 permits an in-rack sprinkler system consisting of up to 20 sprinklers to be supplied from the overhead system without a separate control valve (see Exhibit 25.2). The 20-sprinkler limit is the total number of in-rack sprinklers supplied from a given system riser.

25.1.3.2.3 The separate indicating valves shall be permitted to be arranged as sectional control valves supplied from the ceiling sprinkler system where in-rack sprinklers are required and the racks, including the adjacent aisles, occupy 8000 ft^2 (740 m^2) or less of the area protected by the ceiling sprinklers.

When the in-rack system covers only a portion of the area protected by the overhead sprinkler system, 25.1.3.2.3 permits a sectional control valve to be installed where the in-rack sprinklers connect to the overhead sprinkler piping to serve as the control valve. This allows the in-rack system to be isolated without impairing the overhead sprinkler system. This provision applies only where the in-rack system has more than 20 sprinklers but occupies only a portion of the area protected by the overhead system, since an impairment to the overhead system will also impair the in-rack system. The intent is that the overhead sprinklers and the in-rack sprinklers are not to be impaired at the same time. While the size of the area covered by the in-rack system is not defined, the intent is that, while the rack portion should remain relatively small, where the rack area is significant, separate in-rack system control valves will be provided.

EDUFIRE.IR

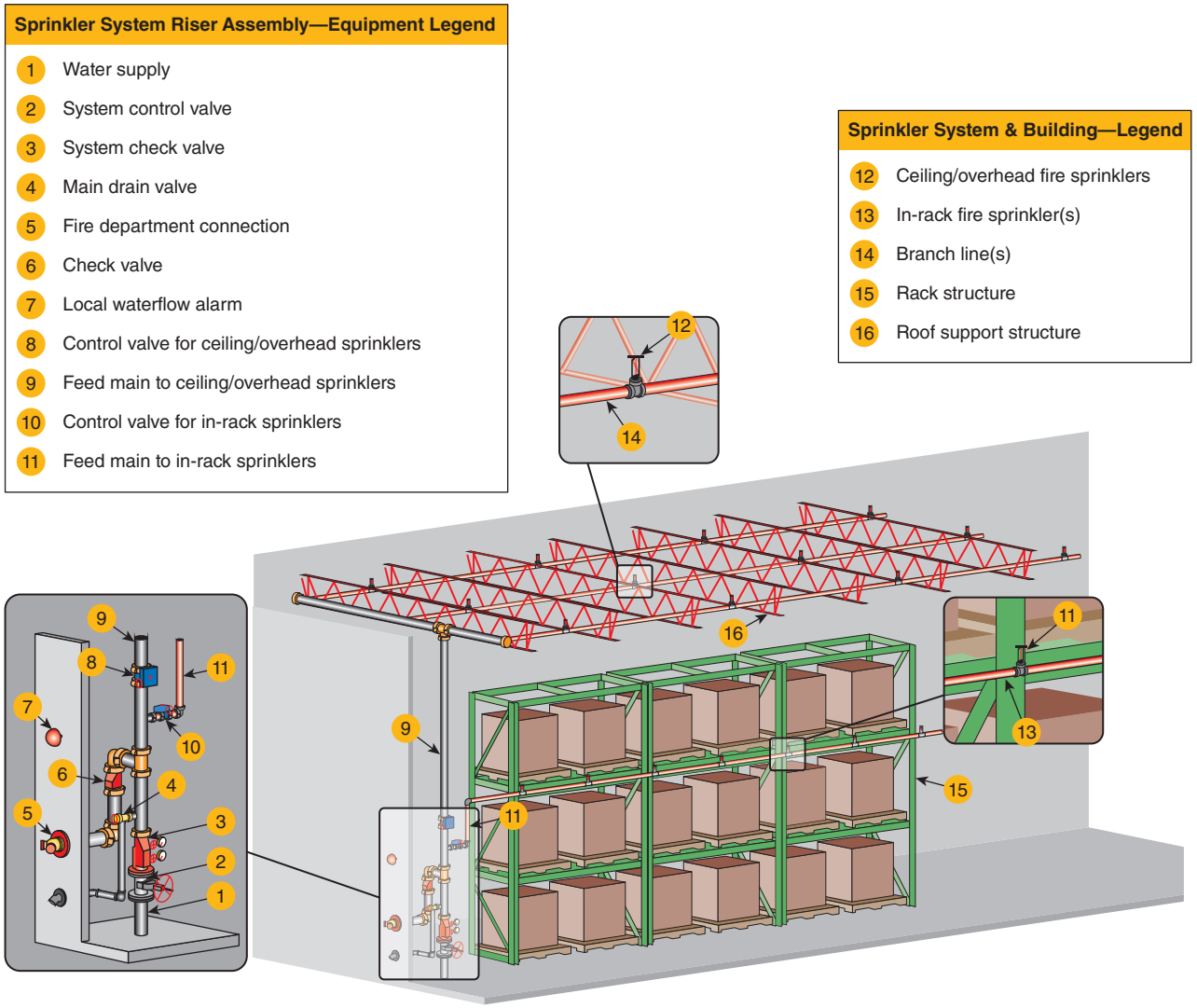

EXHIBIT 25.1 Separately Controlled Ceiling and In-Rack Sprinklers. (Courtesy of Stephan Laforest)

Exhibit 25.3 provides an example of this arrangement, and Exhibit 25.4 shows a sectional valve arrangement for an in-rack system.

25.1.3.3* Sprinkler Waterflow Alarm for In-Rack Sprinklers. See Section C.4.

C.4 [25.1.3.3] The time of operation of the first sprinkler varied from 52 seconds to 3 minutes and 55 seconds, with most tests under 3 minutes, except in Test 64 (Class III), where the first sprinkler operated in 7 minutes and 44 seconds. Fire detection more sensitive than waterflow is, therefore, considered necessary only in exceptional cases.

A.25.1.3.3 See A.16.11.2.

25.1.4 Building Steel Protection. Where in-rack sprinklers are installed in accordance with this chapter, building steel shall not require special protection.

EDUFIRE.IR

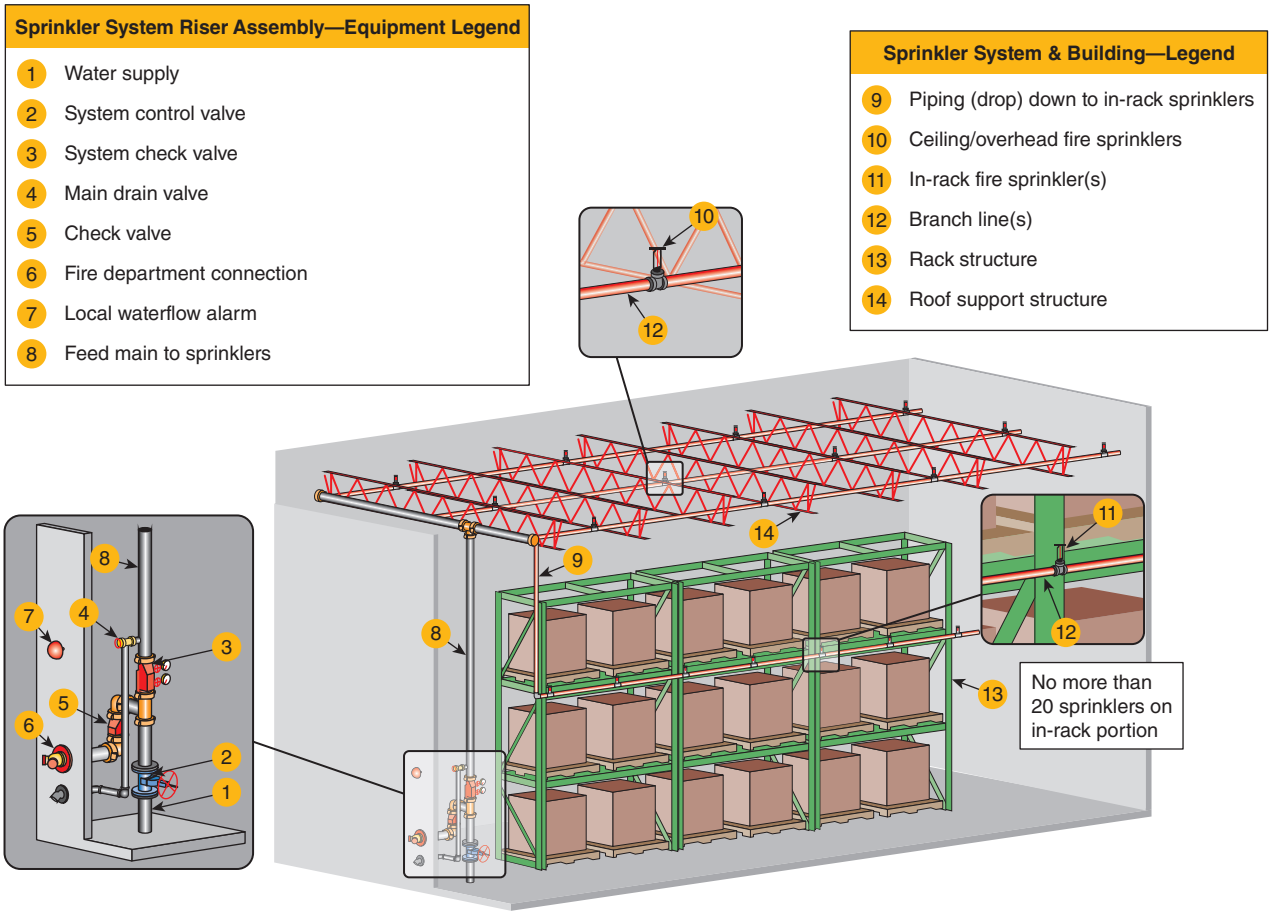

EXHIBIT 25.2 In-Rack Sprinklers Supplied Directly from Ceiling System Without Separate Control Valve. (Courtesy of Stephan Laforest)

25.2 Ceiling-Level Sprinkler Design Criteria in Combination with In-Rack Sprinklers.

25.2.1 General.

25.2.1.1 This section shall apply to storage of Class I through Class IV and Group A plastic commodities as well as rubber tires, representing the broad range of combustibles stored in racks that are being protected by in-rack sprinklers. The requirements of Chapter 20 shall apply unless modified by this chapter. *(See Section C.9.)*

C.9 [25.2.1.1] The discharge criteria of Section 20.10 uses as a basis the large-scale fire test series conducted at the Factory Mutual Research Center, West Glocester, Rhode Island.

The test building is approximately 200 ft × 250 ft (61 m × 76 m) [50,000 ft^2 (4650 m^2) in area], of fire-resistive construction, and contains a volume of approximately 2.25 million ft^3 (63,713 m^3), the equivalent of a 100,000 ft^2 (9230 m^2) building that is 22.5 ft (6.9 m) high. The test building has two primary heights beneath a single large ceiling. The east section is 30 ft (9.1 m) high, and the west section is 60 ft (18 m) high.

The test series for storage height of 20 ft (6.1 m) was conducted in the 30 ft (9.1 m) section with clearances from the top of storage to the ceiling nominally 10 ft (3.0 m).

EDUFIRE.IR

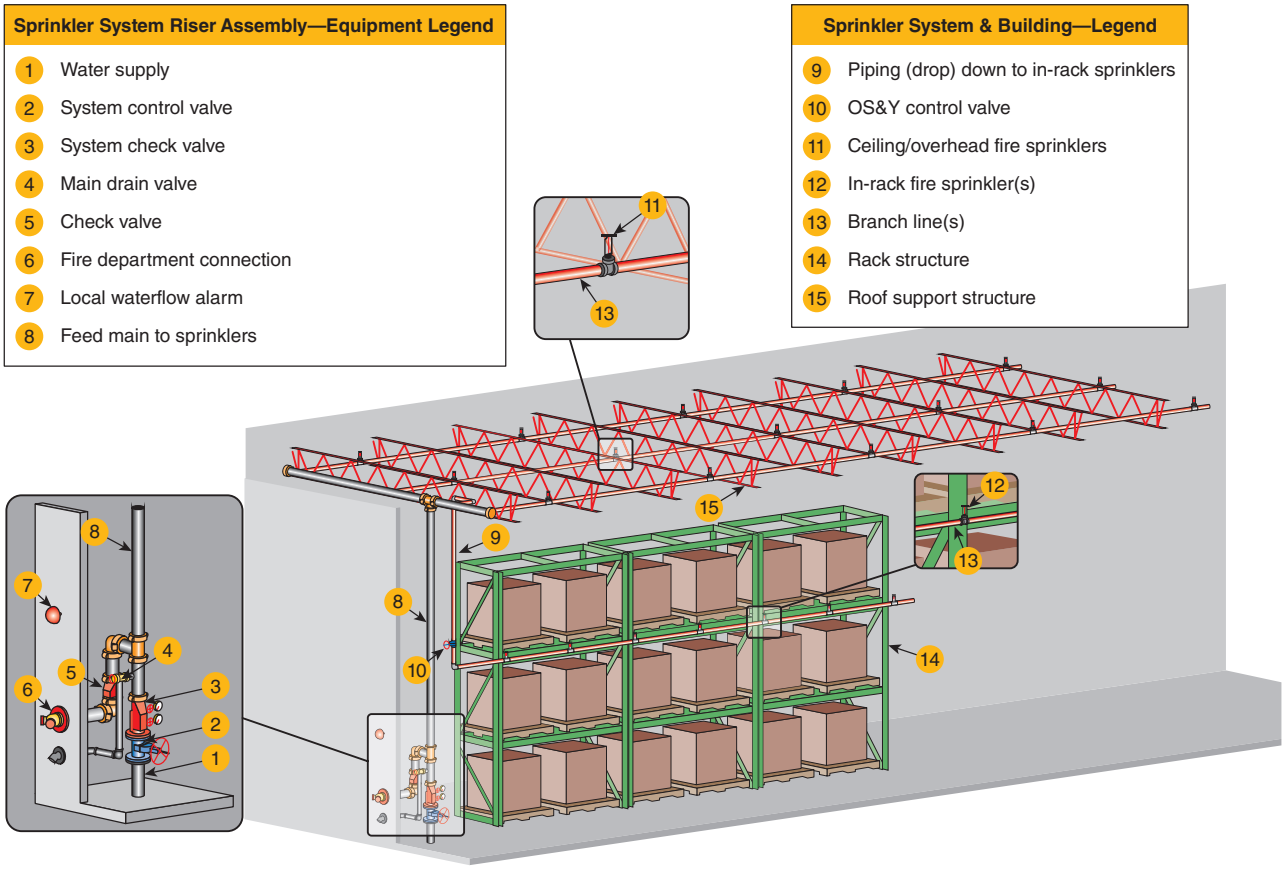

Note: In-rack sprinkler portion contains more than 20 sprinklers but only occupies portion of area protected by ceiling system.

EXHIBIT 25.3 *In-Rack Sprinklers Occupying Only Portion of Area Protected by Ceiling Sprinklers. (Courtesy of Stephan Laforest)*

Doors at the lower and intermediate levels and ventilation louvers at the tops of walls were kept closed during the majority of the fire tests, which minimized the effect of exterior conditions.

The entire test series was fully instrumented with thermocouples attached to rack members, simulated building columns, bar joists, and the ceiling.

Racks were constructed of steel vertical and horizontal members designed for 4000 lb (1815 kg) loads. Vertical members were 8 ft (2.4 m) on center for conventional racks and 4 ft (1.2 m) on center for simulated automated racks. Racks were 3½ ft (1 m) wide with 6 in. (150 mm) longitudinal flue space for an overall width of 7½ ft (2.3 m). Simulated automated racks and slave pallets were used in the main central rack in the 4 ft (1.2 m) aisle tests. Conventional racks and conventional pallets were used in the main central rack in the 8 ft (2.4 m) aisle tests. The majority of the tests were conducted with 100 ft^2 (9.3 m^2) sprinkler spacing.

The test configuration for storage heights of 15 ft (4.6 m), 20 ft (6.1 m), and 25 ft (7.6 m) covered an 1800 ft^2 (167.2 m^2) floor area, including aisles between racks. Tests that were used in producing this standard limited fire damage to this area. The maximum water damage area anticipated in the standard is 6000 ft^2 (555 m^2), the upper limit of the design curves.

The test data show that, as density is increased, both the extent of fire damage and sprinkler operation are reduced. The data also indicate that, with sprinklers installed in the racks, a reduction is gained in the area of fire damage and sprinkler operations (e.g., water damage).

Table C.9 illustrates these points. The information shown in the table is taken from the test series for storage height of 20 ft (6.1 m) using the standard commodity.

EXHIBIT 25.4 *Sectional Control Valve for In-Rack Sprinklers.*

EDUFIRE.IR

The fact that there is a reduction in both fire damage and area of water application as sprinkler densities are increased or where sprinklers are installed in racks should be considered carefully by those responsible for applying this standard to the rack storage situation.

In the test for storage height of 25 ft (7.6 m), a density of 0.55 gpm/ft^2 (22.4 mm/min) produced 42 percent, or 756 ft^2 (70 m^2), fire damage in the test array and a sprinkler-wetted area of 1400 ft^2 (130 m^2). Lesser densities would not be expected to achieve the same limited degree of control. Therefore, if the goal of smaller areas of fire damage is to be achieved, sprinklers in racks should be considered.

The test series for storage height over 25 ft (7.6 m) was conducted in the 60 ft (18 m) section of the test building with nominal clearances from the top of storage to the ceiling of either 30 ft (9.1 m) or 10 ft (3.0 m).

Doors at the lower and intermediate levels and ventilation louvers at the top of walls were kept closed during the fire tests, which minimized the effect of exterior wind conditions.

The purpose of the tests for storage height over 25 ft (7.6 m) was to accomplish the following:

(1) Determine the arrangement of in-rack sprinklers that can be repeated as pile height increases and that provide control of the fire
(2) Determine other protective arrangements, such as high-expansion foam, that provide control of the fire

Control was considered to have been accomplished if the fire was unlikely to spread from the rack of origin to adjacent racks or spread beyond the length of the 25 ft (7.6 m) test rack. To aid in this judgment, control was considered to have been achieved if the fire failed to exhibit the following characteristics:

(1) Jump the 4 ft (1.2 m) aisles to adjoining racks
(2) Reach the end face of the end stacks (north or south ends) of the main rack

Control is defined as holding the fire in check through the extinguishing system until the commodities initially involved are consumed or until the fire is extinguished by the extinguishing system or manual aid.

The standard commodity as selected in the 20 ft (6.1 m) test series was used in the majority of tests for storage over 25 ft (7.6 m). Hallmark products and 3M products described in the 20 ft (6.1 m) test series report also were used as representative of Class III or Class IV commodities, or both, in several tests. The results of privately sponsored tests on Hallmark products and plastic encapsulated standard commodities also were made available to the committee.

A 25 ft (7.6 m) long test array was used for the majority of the tests for storage over 25 ft (7.6 m). The decision to use such an array was made because it was believed that a fire in racks over 25 ft (7.6 m) high that extended the full length of a 50 ft (15 m) long rack could not be considered controlled, particularly as storage heights increased.

One of the purposes of the tests was to determine arrangements of in-rack sprinklers that can be repeated as pile height increases and that provide control of the fire. The tests for storage height of 30 ft (9.1 m) explored the effect of such arrays. Many of these tests, however, produced appreciable fire spread in storage in tiers above the top level of protection within the racks. (In some cases, a total burnout of the top tiers of both the main rack and the target rack occurred.) In the case of the 30 ft (9.1 m) Hallmark Test 134 on the 60 ft (18 m) site, the material in the top tiers of storage burned vigorously, and the fire jumped the aisle above the fourth tier. The fire then burned downward into the south end of the fourth tier. In the test on the floor, a nominal 30 ft (9.1 m) clearance occurred between the top of storage and the ceiling sprinklers, whereas on the platform this clearance was reduced to nominal 10 ft (3.0 m). In most cases, the in-rack sprinklers were effective in controlling fire below the top level of protection within the racks. It has been assumed by the Test Planning Committee that, in an actual case with a clearance of 10 ft (3.0 m) or less above storage, ceiling sprinklers would be expected to control damage above the top level of protection within the racks. Tests have been planned to investigate lesser clearances.

EDUFIRE.IR

Tests 114 and 128 explore the effect of changing the ignition point from the in-rack standard ignition point to a face ignition location. It should be noted, however, that both of these tests were conducted with 30 ft (9.1 m) clearance from the ceiling sprinklers to the top of storage and, as such, ceiling sprinklers had little effect on the fire in the top two tiers of storage. Firespread in the three lower tiers is essentially the same. A similar change in the firespread where the ignition point is changed was noted in Tests 126 and 127. Once again, 30 ft (9.1 m) clearance occurred between the top of storage and the ceiling sprinklers, and, as such, the ceiling sprinklers had little effect on the face fire. Comparisons of Tests 129, 130, and 131 in the test series for storage height of 50 ft (15 m) indicate little effect of point of ignition in the particular configuration tested.

Test 125, when compared with Test 133, indicates no significant difference in result between approved low-profile sprinklers and standard sprinklers in the racks.

The requirements in Chapter 20 apply to all storage occupancies, including those covered in this chapter. Using the requirements from Chapter 20 in conjunction with those of Chapter 25 is critical to the development of a correct and efficient fire sprinkler system design. Chapter 20 contains both the allowances and the restrictions that can affect the system design and that must be considered where applicable. For example, 20.6.1 would limit the design in Chapter 25 to ceiling slopes not exceeding 2 in 12 (16.7 percent), restricting the applicability of the design criteria.

TABLE C.9 *Summary of Relationship Between Sprinkler Discharge Density and the Extent of Fire Damage and Sprinkler Operation*

Density [gpm/ft² (Lpm/m²)]	*Fire Damage in Test Array*		*Sprinkler Operation [165°F (74°C)] Area [ft² (m²)]*
	%	*ft² (m²)*	
0.30 (12.2) (ceiling only)	22	395 (37)	4500–4800 (420–445)
0.375 (15.3) (ceiling only)	17	306 (24)	1800 (165)
0.45 (18.3) (ceiling only)	9	162 (15)	700 (65)
0.20 (8.2) (ceiling only)	28–36	504–648 (46–60)	13,100–14,000 (1215–1300)
0.20 (8.2) (sprinklers at ceiling and in racks)	8	144 (13)	4100 (380)
0.30 (12.2) (sprinklers at ceiling and in racks)	7	126 (12)	700 (65)

For SI units, 1 ft = 0.3048 m; °C = ⅝ (°F – 32); 1 gpm/ft² = 40.746 mm/min.

25.2.1.2* Ceiling-level sprinkler design criteria for single-, double-, and multiple-row racks in Section 25.2 shall be based on open rack configurations as defined in 3.3.140.

See Section 25.6 for the protection requirements where the storage racks are not in an open rack configuration.

A.25.2.1.2 Solid shelf racks as defined in 3.3.198 or obstructions resulting in solid shelf requirements could require additional in-rack sprinklers that could affect the ceiling design requirements.

25.2.1.3* Ceiling-level sprinkler design criteria for Group A plastic commodities in this chapter shall be permitted for the protection of the same storage height and configuration of Class I, II, III, and IV commodities.

A.25.2.1.3 Information for the protection of Classes I, II, III, and IV commodities was extrapolated from full-scale fire tests that were performed at different times than the tests that were used to develop the protection for Group A plastic commodities. It is possible that, by selecting certain points from the tables (and after applying the appropriate modifications), the protection specified by 25.2.3.2.4 for Class I through Class IV commodities exceeds the

EDUFIRE.IR

requirements for Group A plastic commodities. In such situations, the protection specified for plastics, although less than that required by the tables, can adequately protect Class I, II, III, and IV commodities. This section also allows storage areas that are designed to protect Group A plastic commodities to store Class I, II, III, and IV commodities without a re-evaluation of fire protection systems.

The discharge requirements in Chapter 25 for the protection of Group A plastics by control mode density/area (CMDA) sprinklers can sometimes be less restrictive than the requirements for Class IV commodities where adjustments are required. This is because the criteria were developed from different fire tests with different safety factors and different generations of sprinklers. The results have demonstrated some efficiency in the more recent designs for Group A plastics. Any sprinkler protection criteria that work for Group A plastics are also going to work for lesser commodities, so any of the criteria in Chapter 25 for Group A plastics can be used to protect Class I, II, III, and IV commodities covered in Chapter 25.

25.2.1.4 Ceiling-level sprinkler design criteria for single- and double-row rack storage of Group A plastic commodities shall be applicable where aisles are 3.5 ft (1.1 m) or greater in width.

The requirement in 25.2.1.4 reminds the user that storage on racks with aisles that are less than 3.5 ft (1.1 m) wide must be treated as multiple-row rack storage (as discussed in 25.2.1.5).

25.2.1.5 Ceiling-level sprinkler design criteria for rack storage of Group A plastic commodities shall be protected as multiple-row racks where aisles are less than 3.5 ft (1.1 m) in width.

25.2.1.6 The minimum water supply requirements for a hydraulically designed occupancy hazard ceiling-level sprinkler system shall be determined by adding the hose stream allowance from Table 20.12.2.6 to the water supply for in-rack sprinklers determined in Section 25.12, unless indicated otherwise.

In this instance, the user does have to leave Chapter 25 in order to obtain design criteria for the ceiling and in-rack sprinkler systems. While consideration was given to creating a duplicate version of Table 20.12.2.6 in Chapter 25, the Technical Committee on Sprinkler System Discharge Criteria ultimately decided that Table 20.12.2.6 should be the one source for all sprinkler system designs, except where indicated otherwise by a specific design requirement.

25.2.2 Miscellaneous and Low-Piled Storage.

Subsection 25.2.2 covers the requirements for sprinkler systems in facilities that contain either miscellaneous or low-piled storage and that are protected with in-rack sprinklers. The 2016 edition of NFPA 13 was modified to include the additional reference to low-piled storage as permitted by 25.2.2.1.1.

There are two types of miscellaneous storage defined by NFPA 13. These include a general definition for miscellaneous storage and a specific definition for miscellaneous tire storage. The general definition for *miscellaneous storage* in 3.3.123 includes storage having all of the following characteristics:

1. The storage must be incidental to another occupancy use group.
2. The height of storage must not exceed 12 ft (3.7 m).
3. The aggregate storage area cannot exceed 10 percent of the building area or 4000 ft^2 (372 m^2) of the sprinklered area, whichever is greater.
4. Individual storage piles cannot exceed 1000 ft^2 (93 m^2) with each storage pile being separated from other piles by at least 25 ft (7.6 m).

To qualify as miscellaneous storage, the storage has to be incidental to the primary usage of the building or space. For example, a room used to store the tables and chairs for a banquet facility would be considered miscellaneous storage (assuming that it meets all the size and storage height criteria) because the building itself was not constructed for storage. Instead, the building was constructed to be a place for meetings, banquets, and celebrations, and the storage rooms are incidental (but necessary) to that use.

This definition of *miscellaneous storage* would apply to the storage of Class I through Class IV commodities, Group A plastics, and rolled paper. *Miscellaneous tire storage* as defined by 3.3.124 includes those storage arrangements having all of the following characteristics:

EDUFIRE.IR

1. The height of the tire storage is limited based on the storage method as follows:
   a. On-floor, on-side tire storage is 12 ft (3.7 m) or less.
   b. On-floor, on-tread tire storage is 5 ft (1.5 m) or less.
   c. Double-row or multi-row (fixed or portable) racks, on-side or on-tread tire storage is 5 ft (1.5 m) or less.
   d. Single-row (fixed or portable) racks, on-side or on-tread tire storage is 12 ft (3.7 m) or less.
   e. Racks, laced tire storage is 5 ft (1.5 m) or less.
2. The tire storage must be incidental to the primary use of the building.

Such locations might include small tire storage areas incidental to the main use of the building within aircraft hangars, automobile dealers, repair garages, retail storage facilities, automotive and truck assembly plants, and mobile home assembly plants.

The provisions of 25.2.2 also apply to the protection of low-piled storage, miscellaneous or not, of Class I through Class IV commodities up to 12 ft (3.7 m) in height and Group A plastics up to 5 ft (1.5 m) in height.

The requirements of 4.3.1.4, 4.3.1.5, and 25.2.2 are independent of the other storage rules in NFPA 13. The general rules of Chapter 20 do not apply to these requirements, as noted in Section 20.1. This difference is in recognition of the fact that miscellaneous storage tends to burn more similarly to the hazards defined in Chapter 19 than to the hazards outlined in Chapter 20 through Chapter 24. Therefore, it is crucial to understand where 25.2.2 is applicable based on storage height, ceiling height, and commodity classification.

DESIGNER'S CORNER [25.2.2]

What is the difference between storage and miscellaneous storage?

The concept of miscellaneous storage first appeared in NFPA 13 in the 1990s. At that time, several other standards contained sprinkler protection criteria for storage occupancies, most notably NFPA 231, *Standard for General Storage*, for solid-piled, palletized, bin box, and shelf storage and NFPA 231C, *Standard for Rack Storage of Materials*, for rack storage. With three different documents being written by three different technical committees, there were numerous discrepancies regarding how to protect similar situations with sprinklers, leading to arguments about which committee had jurisdiction over low-piled storage.

The differences among the three standards fell into three categories:

1. Hazard classification for a specific storage height
2. Hose stream demand
3. Requirement for first-aid hose stations [1½ in. (40 mm) hose connections with 100 ft (30.5 m) of hose spread throughout the storage area]

Philosophically, NFPA 13 was supposed to be used only with nonstorage occupancies, while NFPA 231 and NFPA 231C were supposed to be used only with storage occupancies.

The issue came to a head when the NFPA 231 technical committee was asked for an interpretation regarding a room in a hotel where extra tables and chairs were being stored between meetings. The question was whether the room should be treated as an ordinary hazard room in the hotel protected in accordance with NFPA 13 or as a storage room with storage up to 8 ft (2.4 m) in height protected in accordance with NFPA 231. The committee answered that the room should be protected as a storage room with 8 ft (2.4 m) of storage and that it would need to be protected in accordance with NFPA 231, which would have required hose stations that NFPA 13 would not have required. Arguments followed among the committees with complaints to the NFPA Standards Council over jurisdiction and scope.

The chairs of the three committees met to try to resolve the problem. They came up with the concept of miscellaneous storage to end the arguments. Small amounts of storage in otherwise nonstorage occupancies would be allowed to be protected in accordance with NFPA 13, while storage of the same height in a storage warehouse would have to be protected in accordance with NFPA 231 or NFPA 231C. This idea worked to at least clearly define the jurisdictional boundaries, even if it did not bring about consistent rules.

For the 1999 edition of NFPA 13, the rules for the protection of storage occupancies were brought into NFPA 13, and the separate storage standards — NFPA 231 and NFPA 231C — were eliminated. A single technical committee was assigned to the rules for discharge protection criteria for all types of storage, including miscellaneous storage. This committee has made changes since 1999 to make the rules more consistent. Now, there is little reason to make a distinction between storage and miscellaneous storage. For Class I through Class IV commodities, the same rules apply whether the storage is considered miscellaneous or not. The only real difference in rules is in the protection of Group A plastics.

EDUFIRE.IR

25.2.2.1 Miscellaneous Storage.

25.2.2.1.1 This section shall apply to any of the following situations:

(1) Miscellaneous rack storage of Class I through Class IV commodities up to and including 12 ft (3.7 m) in height
(2) Miscellaneous rack storage of Group A plastic commodities up to and including 12 ft (3.7 m) in height
(3) Miscellaneous rack storage of rubber tires up to and including 12 ft (3.7 m) in height

25.2.2.1.2 Where in-rack sprinklers are installed in accordance with Section 25.4 through Section 25.7 to protect miscellaneous rack storage of Class I through Class IV and Group A plastic commodities, as well as miscellaneous rack storage of rubber tires, up to and including 12 ft (3.7 m) in height under a maximum 32 ft (10.0 m) high ceiling, the ceiling-level sprinkler design criteria shall be in accordance with Figure 25.2.2.1.2.

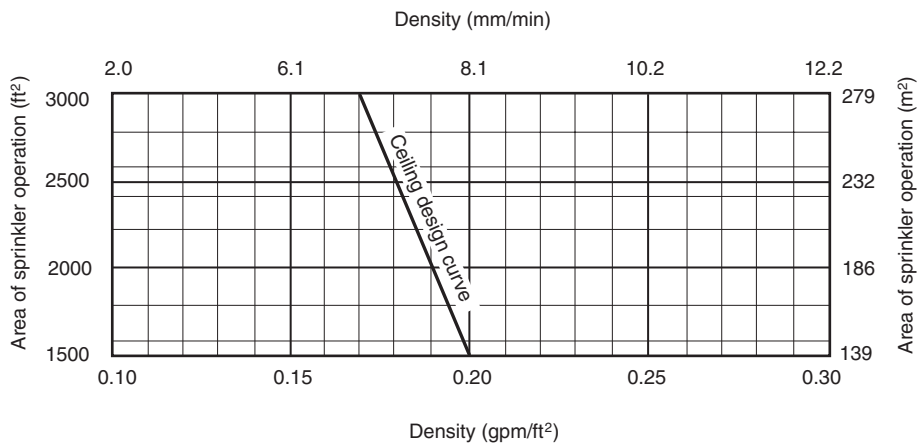

FIGURE 25.2.2.1.2 *CMDA Ceiling-Level Sprinkler Design Criteria for Miscellaneous Storage Protected with One Level of In-Rack Sprinklers.*

Note that the ceiling designs indicated in Figure 25.2.2.1.2 are the same as those ceiling designs indicated for Ordinary Hazard Group 2 occupancies.

FAQ [25.2.2.1.4]

Are hose connections required for miscellaneous storage situations where in-rack sprinklers are provided?

Hose connections are not required for the protection of miscellaneous storage because the storage is incidental to another occupancy. Typically, miscellaneous storage is incidental to ordinary and extra hazard occupancies. The miscellaneous storage is there to support these other occupancies. Since hose stations are not needed for ordinary or extra hazard occupancies, they are not required by NFPA 13 even if a limited amount of storage also is present.

25.2.2.1.3 Installation criteria as permitted by NFPA 13 and design criteria and modifiers as permitted by the density/area method of Section 19.2 for ordinary hazard Group 2 occupancies shall be applicable.

The most popular modifier from Chapter 19 is the reduction in the design area (based on the ceiling height) for the use of quick-response sprinklers. This reduction is not allowed for storage protected in accordance with Chapter 20 or any of the requirements in Chapter 21 through Chapter 25 (accept as noted in Chapter 25), but the reduction is allowed for miscellaneous storage and low-piled storage based on 25.2.2.1.3. Any of the adjustments that apply to ordinary hazard occupancies under Chapter 19 also apply to the corresponding miscellaneous or low-piled storage if protected with in-rack sprinklers. This adjustment includes the 30 percent increase to the design area for steep ceiling slope (greater than 2 in 12, or 16.7 percent), which is not permitted to be used with other types of storage but is allowed to protect miscellaneous and low-piled storage.

25.2.2.1.4 Hose Connections. Hose connections shall not be required for the protection of miscellaneous storage.

25.2.2.2 Low-Piled Rack Storage.

25.2.2.2.1 This section shall apply to any of the following situations:

EDUFIRE.IR

(1) Rack storage of Class I through Class IV commodities up to and including 12 ft (3.7 m) in height
(2)* Rack storage of Group A plastic commodities up to and including 5 ft (1.5 m) in height

A.25.2.2.2.1(2) All rack fire tests of Group A plastic commodities were run with an approximate 10 ft (3.0 m) maximum clearance to ceiling.

25.2.2.2.2 Where in-rack sprinklers are installed in accordance with Sections 25.4 through 25.7 to protect low-piled rack storage that does not meet the definition of miscellaneous storage, of Class I through Class IV and Group A plastic commodities, the ceiling-level design shall be in accordance with Figure 25.2.2.1.2.

25.2.2.2.3 For low-piled rack storage that does not meet the definition of miscellaneous storage, with solid shelves of Class I through Class IV commodities up to and including 12 ft (3.7 m) in height, in-rack sprinklers shall be provided in accordance with Section 25.6, and the ceiling-level sprinkler design shall be in accordance with Figure 25.2.2.1.2.

25.2.2.2.4 For low-piled rack storage that does not meet the definition of miscellaneous storage, with solid shelves of Group A plastic commodities up to and including 5 ft (1.5 m) in height, in-rack sprinklers shall be provided in accordance with Section 25.6, and the ceiling-level sprinkler design shall be in accordance with Figure 25.2.2.1.2.

The requirements in 25.2.2.2.3 and 25.2.2.2.4 were added to the 2016 edition of NFPA 13 to address situations where the installation of in-rack sprinklers would be required for solid shelf racks that are protected in accordance with the requirements for miscellaneous and low-piled storage. For non-miscellaneous rack storage of Class I through Class IV commodities up to 12 ft (3.7 m) and Group A plastics up to 5 ft (1.5 m) that are allowed to be protected under the provisions of 25.2.2.2.1(1) and 25.2.2.2.1(2), respectively, the installation of in-rack sprinklers beneath solid shelves is required in accordance with 25.2.2.2.3 for Class I through Class IV commodities and 25.2.2.2.4 for Group A plastics. The ceiling sprinkler design for these storage areas is permitted to be determined from Figure 25.2.2.1.2.

Conversely, the installation of in-rack sprinklers is not required beneath solid shelving installed within racking arrays that do not exceed the limits of miscellaneous storage. In other words, smaller storage arrays complying with the definition of miscellaneous storage are permitted to use solid shelving without the installation of in-rack sprinklers.

25.2.3 CMDA Ceiling-Level Sprinkler Design Criteria in Combination with In-Rack Sprinklers.

25.2.3.1 General.

25.2.3.1.1 Ceiling-level sprinkler design criteria in combination with in-rack sprinklers for the rack storage of Class I through Class IV commodities shall be in accordance with 25.2.3.2 for storage over 12 ft (3.7 m) and up to and including 25 ft (7.6 m) in height and 25.2.3.3 for storage over 25 ft (7.6 m) in height.

25.2.3.1.2 Ceiling-level sprinkler design criteria in combination with in-rack sprinklers for the rack storage of Group A plastic commodities shall be in accordance with 25.2.3.4 for storage over 5 ft (1.5 m) and up to and including 25 ft (7.6 m) in height and 25.2.3.5 for storage over 25 ft (7.6 m) in height.

Paragraphs 25.2.3.1.1 and 25.2.3.1.2 make a distinction between open rack storage up to 25 ft (7.6 m) in height and open rack storage in excess of 25 ft (7.6 m) in height. This is because storage at heights greater than 25 ft (7.6 m) can generate fires with substantially higher vertical momentum to the fire plume, making it much more difficult for ceiling sprinklers alone to control or suppress the fire. Once rack storage exceeds 25 ft (7.6 m) in height, in-rack sprinklers are required where CMDA sprinklers are installed at ceiling level.

Several full-scale fire tests were conducted with in-rack sprinklers in the late 1960s and early 1970s using standard-response K-5.6 (K-80) sprinklers both at ceiling level and within the storage racks. For storage up to 25 ft (7.6 m) in height, testing demonstrated that in-rack sprinklers in only the longitudinal flue

EDUFIRE.IR

space in combination with ceiling-level sprinklers could provide fire control. However, once the storage height exceeded 25 ft (7.6 m), the combination of ceiling sprinklers and in-rack sprinklers in only the longitudinal flue space was not sufficient to control fires that originated at the face of the rack. This resulted in the need for face sprinklers for storage heights in excess of 25 ft (7.6 m) in height, whereas face sprinklers were not required for open rack storage that did not exceed 25 ft (7.6 m) in height.

As a result, the rules for protecting rack storage of Class I through Class IV and Group A commodities are divided into two sets. The first set of rules is for the protection of storage up to and including 25 ft (7.6 m) in height and can be found in 25.2.3.4. The second set is for the protection of storage over 25 ft (7.6 m) in height and can be found in 25.2.3.5.

25.2.3.1.3 For design densities of 0.2 gpm/ft² (8.1 mm/min) or less, standard-response CMDA sprinklers with a K-factor of K-5.6 (80) or larger shall be permitted.

Storage commodity fires have become more challenging over the years, and the flow demand from sprinkler systems to control or suppress such fires has increased. At the same time, it has been recognized that water droplet momentum (the product of mass times velocity of the water droplet as it moves toward the floor from the sprinkler) is critical to achieving fire control or suppression. Fire tests and fire experience have shown that K-5.6 (K-80) sprinklers, discharging at the pressure necessary to protect high-challenge storage fires, do not produce as many large water droplets as would be ideal for developing good droplet momentum. Therefore, the use of these sprinklers for new projects has been limited to less challenging storage commodities, which are defined by way of design density. Storage situations that need only a density of 0.2 gpm per ft² (8.1 mm/min) or less are less demanding than most storage occupancies and are valid for K-5.6 (K-80) orifice size sprinklers.

It should be noted that this rule applies only to storage occupancies. Sprinklers with K-5.6 orifice sizes are permitted to be used for any ordinary or extra hazard situation, even where the discharge density requirement is greater than 0.2 gpm per ft² (8.1 mm/min).

It also should be noted that this rule pertains only to new ceiling and in-rack sprinkler systems. Existing ceiling and in-rack sprinkler systems that were designed and installed under older editions of NFPA 13 before this requirement went into effect are permitted to remain in use (see 25.2.3.1.6). There is no retroactive requirement in the standard that would require the replacement of K-5.6 (K-80) sprinklers on an older system where they were correctly used in conformance with an earlier edition of NFPA 13.

25.2.3.1.4 For design densities greater than 0.2 gpm/ft² and up to 0.34 gpm/ft² (8.1 mm/min to 13.9 mm/min), standard-response CMDA sprinklers with a nominal K-factor of K-8.0 (115) or larger shall be used.

Similar to the situation discussed in the commentary to 25.2.3.1.3, the size of fires that can be protected with K-8.0 (K-115) sprinklers in storage occupancies is limited to medium-size fires, defined in the standard as those that need 0.34 gpm per ft² (13.9 mm/min) or less as a design density. This limitation is only for new systems and applies only to storage occupancies (see 25.2.3.1.6).

25.2.3.1.5 For design densities greater than 0.34 gpm/ft² (13.9 mm/min), standard-response CMDA sprinklers with a K-factor of K-11.2 (160) or larger that are listed for storage applications shall be used.

Fire tests have shown that sprinklers with larger orifices — K-factors of K-11.2 (K-160) or larger — perform better during storage fires with strong fire plumes than sprinklers with smaller orifices at the same design density (see 25.2.3.1.3). The design of the deflector, along with the lower pressure at which the sprinkler operates, generally results in water droplets with more momentum leaving the sprinkler and penetrating the fire plume to better achieve fire suppression or control.

25.2.3.1.6 The requirements of 25.2.3.1.4 and 25.2.3.1.5 shall not apply to modifications to existing storage application systems, using sprinklers with K-factors of K-8.0 (115) or less.

25.2.3.1.7 The use of quick-response CMDA sprinklers for storage applications shall be permitted when listed for such use.

In some situations, a storage fire might only be controlled, not suppressed, by the sprinkler system. During the time that the sprinkler system has established control, but before the final extinguishment of the fire

EDUFIRE.IR

by fire department personnel, the fire will still be releasing heat into the building. With the significant heat release possible from storage fires, along with the sensitivity of quick-response sprinklers, there is some concern that more quick-response sprinklers will open remote from the fire and that the water supply will then be incapable of maintaining fire control. As a result, quick-response sprinklers cannot be used interchangeably with standard-response sprinklers unless they are specifically listed for such use.

25.2.3.1.8 The ceiling sprinkler design figures in 25.2.3 indicate water demands for ordinary-temperature-rated and nominal high-temperature-rated CMDA sprinklers at the ceiling.

Most of the density/area discharge criteria given in 25.2.3 were developed from full-scale fire tests over a period of more than 40 years. In many of those tests, high-temperature sprinklers with K-factors of K-8.0 (K-115) or K-5.6 (K-80) tended to have fewer sprinklers open to provide fire control compared with ordinary-temperature sprinklers with the same orifice size. Some tables and figures in 25.2.3 take this difference into account and provide for smaller design areas or lesser densities at the same design area because of that effect.

When intermediate-temperature sprinklers are used, the design density should follow the criteria for ordinary-temperature sprinklers. See the commentary following 25.2.3.1.9 for more information on options within Chapter 25 for the use of different temperature-rated sprinklers.

25.2.3.1.8.1 The ordinary-temperature ceiling sprinkler design densities correspond to ordinary-temperature-rated sprinklers and shall be used for sprinklers with ordinary- and intermediate-temperature classification.

25.2.3.1.8.2 The high-temperature ceiling sprinkler design densities correspond to high-temperature-rated sprinklers and shall be used for sprinklers having a high-temperature rating.

25.2.3.1.9 Ordinary- and intermediate-temperature CMDA ceiling sprinklers with K-factors of K-11.2 (K-160) or larger, where listed for storage, shall be permitted to use the densities for high-temperature sprinklers.

The original fire tests that were conducted to determine the discharge criteria for solid-piled, palletized, and rack storage were conducted with K-5.6 (K-80) and K-8.0 (K-115) sprinklers. During those tests, it was noticed that the use of high-temperature sprinklers could significantly reduce the number of sprinklers that opened during a fire, which has the effect of conserving the water supply. Density/area criteria were developed for high-temperature sprinklers with K-5.6 (K-80) or K-8.0 (K-115) to take advantage of such conservation by allowing either a reduction in sprinkler densities for the same design area or a reduction in design area for the same discharge densities. When the K-11.2 (K-160) and larger sprinklers were developed, full-scale fire tests showed that the ordinary-temperature sprinklers of the larger orifice sizes performed better than the high-temperature sprinklers of K-5.6 (K-80) or K-8.0 (K-115).

The improved discharge quality (increased droplet size and resultant momentum) associated with the larger orifice sprinklers [K-11.2 (K-160) and larger] provided for better fire control and a corresponding reduction in the number of operating sprinklers. As a result, K-11.2 (K-160) and larger sprinklers are permitted to be used with the more efficient high-temperature curves, even though they are ordinary-temperature sprinklers.

25.2.3.1.10 Discharge Considerations.

25.2.3.1.10.1 The water supply for ceiling and in-rack sprinklers only shall be determined from the density/area requirements of Chapter 25.

25.2.3.1.10.2 The calculations shall satisfy any single point on appropriate density/area curves.

NFPA 13 does not require every point on the density/area curves to be satisfied. Instead, the designer is permitted to select any single point and make appropriate adjustments. After the adjustments are made, the designer does not need to revisit the curves. Once the designer knows in advance the adjustments that have to be made, specific points on the curves can be selected that contemplate the specific properties associated with the project's water supply. For example, if the designer knows that the building will have unsprinklered combustible concealed spaces that force the design area to a minimum of 3000 ft^2 (280 m^2), it would make sense to select the density corresponding to 3000 ft^2 (280 m^2) from the curve rather than selecting a higher density corresponding to a lower area and having to use that density once the design area is increased due to the concealed spaces.

EDUFIRE.IR

CLOSER LOOK [25.2.3.1.10.2]

Understanding Density/Area Curves

Beginning with the 2010 edition of NFPA 13, the density/area curves in Chapter 21 and Chapter 25 have been truncated at a maximum of 3000 ft² (280 m²) operating area, whereas some of the curves in previous editions had been as high as 6000 ft² (555 m²). The reduction was a compromise between some members of the committee who favored single point densities for simplicity and other members who preferred the flexibility of the curves. There was widespread agreement among committee members that it was not a good idea to use the upper ends of the curves, where densities were lower and design areas were larger, because they allowed greater fire damage to occur compared with points lower down on the curve which tended to discharge more water out of the first few sprinklers.

The development of K-11.2 (K-160) and larger sprinklers for fire control has significantly reduced the need for larger design areas (sliding up the curves) to reduce the required density by lowering the pressure necessary to get the greater densities from the first sprinklers that open. For example, if a discharge density of 0.45 gpm/ft² (18.3 mm/min) was necessary to protect a specific storage commodity with the sprinklers spaced at 100 ft² (9.3 m²) per sprinkler, a flow of 45 gpm (170 L/min) would be needed from each sprinkler. If sprinklers with an orifice size of K-5.6 (K-80) were used, it would take a pressure of about 65 psi (4.5 bar) to push that flow out of the sprinkler. Going up to a K-8.0 (K-115) sprinkler would still require a pressure of about 32 psi (2.2 bar). Those are very high starting pressures for the most remote sprinkler on a system. Once the friction and elevation losses were accounted for, this water supply might need 60 psi (4.1 bar) or 70 psi (4.8 bar) to supply the sprinkler system.

If the water supply had sufficient flow but insufficient pressure, the only option that a designer had years ago might be to slide up the curve to a higher operating area with a lower density. That would lower the pressure needed at the most remote sprinkler and lower the friction loss in the smaller pipes, thereby lowering the total sprinkler system's pressure demand.

The development of K-11.2 (K-160) and larger sprinklers, however, allowed designers to drop the pressure and keep the discharge density the same. To achieve a flow of 45 gpm (170 L/min) from a sprinkler with a K-factor of K-11.2 (160), a pressure of only 16 psi (1.1 bar) is required. Larger orifice sprinklers drop the pressure even further.

There are still at least the following four reasons why designers might want to use the flexibility offered by the curves when ceiling and in-rack sprinklers are to be installed:

1. *Sliding up the curve to provide more options for orifice sizes required by 25.2.3.1.3 through 25.2.3.1.5*. For example, if a commodity required a density of 0.35 gpm/ft² (13.3 mm/min) over a protection area of 2000 ft² (186 m²), 25.2.3.1.5 would mandate the use of a K-11.2 (K-160) or larger orifice sprinkler for that protection. By sliding up the curve to a greater area, the designer can achieve a density lower than 0.34 gpm/ft² (13.9 mm/min) and use a sprinkler with an orifice size of K-8.0 (K-115) (see 25.2.3.1.4).
2. *Obtaining a greater spacing allowance, as specified in Table 10.2.4.2.1(d)*. Where a storage commodity can be protected with densities that are close to but just over the 0.25 gpm/ft² (9.5 mm/min) limit, a design area no larger than 100 ft² (9.3 m²) would be required. But by sliding up the curve to a lower density, under 0.25 gpm/ft² (9.5 mm/min), an increase in the sprinkler spacing from 100 ft² to 130 ft² (9.3 m² to 12.1 m²) would be permitted, and an increase in the maximum spacing would be permitted from 12 ft to 15 ft (3.7 m to 4.6 m).
3. *Mixing of extra hazard occupancies with storage and designing for the worst case*. Frequently, the owner will have both extra hazard and storage occupancies in a building. Because the minimum design area for extra hazard occupancies is 2500 ft² (232 m²), according to Figure 19.3.3.1.1, and the minimum design area for most storage occupancies is 2000 ft² (186 m²), "if there's a fire,"? it can sometimes be difficult to determine what the most demanding area will be and if the storage can be interchanged with the extra hazard. But if the designer slides up the curves for the storage commodity protection to the density for 2500 ft² (232 m²), it will be easier to discern which is the more demanding situation. For example, if a building is going to have mixed use of extra hazard (Group 1) and open double-row rack storage with 8 ft (2.4 m) wide aisles of nonencapsulated Class IV commodity up to 20 ft (6.1 m) in height protected with ordinary-temperature ceiling sprinklers and one level of in-rack sprinklers, it might be difficult to discern which is the more demanding situation. The extra hazard (Group 1) protection needs a minimum density of 0.3 gpm/ft² (12.2 mm/min) over 2500 ft² (232 m²) (see Figure 19.3.3.1.1), whereas the storage needs a minimum density of 0.37 gpm/ft² (15.1 mm/min) over 2000 ft² (186 m²) [see Figure 25.2.3.2.3.1(d)]. By sliding up the Class IV curve to 2500 ft² (232 m²), the density requirement becomes 0.345 gpm/ft² (14.0 mm/min), which makes it clear that the storage is worse than the extra hazard. If the sprinkler system is designed to protect the storage at 0.345 gpm/ft² (14.0 mm/min) over 2500 ft² (232 m²), the owner will be allowed to move the extra hazard use of the building anywhere without having to redo the sprinkler system.
4. *Designing a sprinkler system for a storage occupancy with unsprinklered combustible concealed spaces*. Section 20.7 requires that the sprinkler systems in buildings with certain combustible concealed spaces that do not have fire sprinklers need to be designed for a minimum design area of 3000 ft² (280 m²). Therefore, when the designer is selecting a point from the density/area curves for these buildings, it would be prudent to start at the density corresponding to 3000 ft² (280 m²) rather than being forced to go up to 3000 ft² (280 m²) later in the calculations.

EDUFIRE.IR

25.2.3.1.10.3 The design area shall meet the requirements of 19.6.4.2.

The shape of the design area needs to be based on a reasonable worst-case situation. Without any walls or air currents to push the hot gases from a fire, the sprinklers around a fire would open based on their radius from the fire, so the design area would take on the shape of a square (or something close to a square if spacing was not quite uniform). The hydraulic calculation rules have been written to allow for some worst-case assumptions to be made to account for situations such as walls or air currents pushing the hot gases from a fire to open more sprinklers in one direction than in the other. If the hot gases from a fire open more sprinklers in the direction of the branch line, it is more difficult for the water supply because more water will be required to get down the branch line, which traditionally has smaller pipe. So, when sprinklers with a density/area design are used, Chapter 27 of NFPA 13 requires that the design area be skewed in the direction parallel to the branch lines more than in the direction parallel to the mains. Chapter 27 requires a skew of at least 20 percent in the direction of the branch lines by forcing the user to make the dimension of the design area parallel to the branch lines 1.2 times the square root of the design area.

25.2.3.1.10.4 The minimum design density shall be not less than 0.15 gpm/ft² (6.1 mm/min) after all adjustments are made.

It is possible that after all the appropriate density adjustments have been made to some 12 ft to 14 ft (3.7 m to 4.3 m) storage height arrangements of Class I and Class II commodities, the density could be lower than 0.15 gpm/ft² (6.1 mm/min). That density would be considered too low for storage protection because it would not have acceptable safety factors, and the designer would have to increase the protection to a density of 0.15 gpm/ft² (6.1 mm/min).

25.2.3.2 Rack Storage of Class I Through Class IV Commodities Stored Over 12 ft (3.7 m) and Up to and Including 25 ft (7.6 m) in Height.

25.2.3.2.1* Single- and Double-Row Racks. For single- or double-row rack storage of Class I through Class IV commodities, encapsulated or nonencapsulated, stored over 12 ft (3.7 m) and up to and including 25 ft (7.6 m) in height, Table 25.2.3.2.1 shall be used to determine the appropriate figure for determining ceiling-level sprinkler design criteria with the provision of one level of in-rack sprinklers.

ASK THE AHJ

Often the hydraulic calculations submitted to the authority having jurisdiction using the curves in Figure 25.2.3.2.3.1(a) through Figure 25.2.3.2.3.1(g) are based on a minimum design density specified to a tolerance of ±0.001. Is this permitted?

Each of the curves in the figures spans between the hundredth (0.01) grid lines of each figure, with the density varying with an infinite degree of available accuracy values with movement along the curve. However, the degree of accuracy that can be read from the curves is limited by the overall scale of the figure and the provided hundredth grid lines in the figure. For measurements using a scale, the uncertainty of a measurement is half the smallest division of that scale. Therefore, for a reasonable degree of accuracy, it is suggested that the density be read to the nearest greater 0.005 gpm/ft² (0.2 mm/min). It is important to note that this would apply to the reading of the figure and that modifications to the required density due to other adjustments, such as additional in-rack sprinklers, height adjustments, or encapsulation, can result in more precise calculated densities but should be rounded to the nearest 0.001 gpm/ft² (0.04 mm/min).

Single-row and double-row racks create similar fire hazards, and the rules for protecting both can be found in 25.2.3.2.1. Multiple-row racks, however, present a significantly more challenging fire scenario due to the limited number of aisles separating the racks of combustibles. Separate rules for protecting multiple-row racks can be found in 25.2.3.2.2.

EDUFIRE.IR

TABLE 25.2.3.2.1 *Determining Appropriate Ceiling-Level Protection Criteria Figure for Single- or Double-Row Racks of Class I Through Class IV Commodities — Storage Height Over 12 ft (3.7 m) Up to and Including 25 ft (7.6 m)*

Storage Height	Commodity Class	Encapsulated	Aisle Width* ft	Aisle Width* m	No. of In-Rack Sprinkler Levels	Appropriate Figure and Curves: Figure	Appropriate Figure and Curves: Curves	Apply Figure 25.2.3.2.4.1
Over 12 ft (3.7 m) and up to and including 20 ft (6.1 m)	I	No	4	1.2	1 Level	25.2.3.2.3.1(a)	C and D	Yes
			8	2.4			A and B	
		Yes	4	1.2		25.2.3.2.3.1(e)	C and D	
			8	2.4			A and B	
	II	No	4	1.2		25.2.3.2.3.1(b)	C and D	
			8	2.4			A and B	
		Yes	4	1.2		25.2.3.2.3.1(e)	C and D	
			8	2.4			A and B	
	III	No	4	1.2		25.2.3.2.3.1(c)	C and D	
			8	2.4			A and B	
		Yes	4	1.2		25.2.3.2.3.1(f)	C and D	
			8	2.4			A and B	
	IV	No	4	1.2		25.2.3.2.3.1(d)	C and D	
			8	2.4			A and B	
		Yes	4	1.2		25.2.3.2.3.1(g)	C and D	
			8	2.4			A and B	
Over 20 ft (6.1 m) and up to and including 22 ft (6.7 m)	I	No	4	1.2	1 Level	25.2.3.2.3.1(a)	C and D	No
			8	2.4			A and B	
		Yes	4	1.2		25.2.3.2.3.1(e)	C and D	
			8	2.4			A and B	
	II	No	4	1.2		25.2.3.2.3.1(b)	C and D	
			8	2.4			A and B	
		Yes	4	1.2		25.2.3.2.3.1(e)	C and D	
			8	2.4			A and B	
	III	No	4	1.2		25.2.3.2.3.1(c)	C and D	
			8	2.4			A and B	
		Yes	4	1.2		25.2.3.2.3.1(f)	C and D	
			8	2.4			A and B	
	IV	No	4	1.2		25.2.3.2.3.1(d)	C and D	
			8	2.4			A and B	
		Yes	4	1.2		25.2.3.2.3.1(g)	C and D	
			8	2.4			A and B	
Over 22 ft (6.7 m) and up to and including 25 ft (7.6 m)	I	No	4	1.2	1 Level	25.2.3.2.3.1(a)	C and D	No
			8	2.4			A and B	
		Yes	4	1.2		25.2.3.2.3.1(e)	C and D	
			8	2.4			A and B	
	II	No	4	1.2		25.2.3.2.3.1(b)	C and D	
			8	2.4			A and B	
		Yes	4	1.2		25.2.3.2.3.1(e)	C and D	
			8	2.4			A and B	
	III	No	4	1.2		25.2.3.2.3.1(c)	C and D	
			8	2.4			A and B	
		Yes	4	1.2		25.2.3.2.3.1(f)	C and D	
			8	2.4			A and B	
	IV	No	4	1.2		25.2.3.2.3.1(d)	C and D	
			8	2.4			A and B	
		Yes	4	1.2		25.2.3.2.3.1(g)	C and D	
			8	2.4			A and B	

*See 25.2.3.2.1.1 for interpolation of aisle widths.

EDUFIRE.IR

There are 28 different density/area curves that apply to the rack storage of Class I through Class IV commodities stored on racks that are protected with in-rack sprinklers. To help the user determine which density/area curve to use for any given single- or double-row rack situation, Table 25.2.3.2.1 organizes the information so that the user does not need to hunt through the legends of seven different figures. As long as users know the storage height, the commodity classification, whether or not the storage is encapsulated, and the width of the aisles, they will be able to determine which of the 28 density/area curves apply to their situation.

A.25.2.3.2.1 Bulkheads are not a substitute for sprinklers in racks. Their installation does not justify reduction in sprinkler densities or design operating areas as specified in the design curves.

25.2.3.2.1.1* Design densities for single- and double-row racks shall be selected to correspond to aisle width. *(See Section C.15.)*

(A) For aisle widths between 4 ft (1.2 m) and 8 ft (2.4 m), the rules for 4 ft (1.2 m) wide aisles shall be used or direct linear interpolation between the densities shall be permitted.

(B) The density given for 8 ft (2.4 m) wide aisles shall be applied to aisles wider than 8 ft (2.4 m).

(C) The density given for 4 ft (1.2 m) wide aisles shall be applied to aisles more narrow than 4 ft (1.2 m) down to 3½ ft (1.1 m).

(D) Where aisles are more narrow than 3½ ft (1.1 m), racks shall be considered multiple-row racks.

FAQ [25.2.3.2.1.1]

For aisles greater than 8 ft (2.4 m) in width, do the sprinkler protection requirements decrease?

There is no credit given to situations where the aisles are greater than 8 ft (2.4 m) wide. For aisle widths less than 8 ft (2.4 m), a higher density is needed to prevent a fire from jumping the aisle, but for aisle widths greater than 8 ft (2.4 m), aisle jump is no longer a controlling factor in protection requirements.

DESIGNER'S CORNER [25.2.3.2.1]

Why do the density/area curves associated with 25.2.3.2.3.1 end at 3000 ft² (280 m²)? Would I ever want to go above the lowest point on the curve since the lowest point is the most efficient?

If you refer to older editions of NFPA 13, you will find that most of the density/area curves continued well above 3000 ft² (280 m²). Starting with the 2002 edition, the committee discussed the value of the density/area curves and agreed that the lowest point on the curve will be the most efficient in many circumstances.

For example, if you are protecting a storage commodity in accordance with curve C in Figure 25.2.3.2.3.1(b), the point 0.255 gpm/ft² (10.3 mm/min) over 2000 ft² (186 m²) will require a minimum of 510 gpm (1930 L/min)(0.255 x 2000 = 510) to work, whereas the point of 0.23 gpm/ft² (9.4 mm/min), which is based on a 3000 ft² (280 m²) demand area, will require a minimum of 690 gpm (2610 L/min)(0.23 x 3000 = 690).

Ultimately, the NFPA membership convinced the Technical Committee on Sprinkler System Discharge to keep the curves. However, the committee could not find a good reason to select a point above 3000 ft² (280 m²), so the curves were cut off at the 3000 ft² (280 m²) level.

There are at least three reasons why selecting a point between 2000 ft² (186 m²) and 3000 ft² (280 m²) might be useful:

1. If you are protecting a storage occupancy that has unsprinklered combustible concealed spaces and that requires a design area of 3000 ft² (280 m²), you might as well start with 3000 ft² (280 m²) rather than starting lower on the curve and increasing the area to 3000 ft² (280 m²). To return to the example used earlier, starting with 0.23 gpm/ft² (9.4 mm/min) over 3000 ft² (280 m²) would be more efficient than starting with 0.255 gpm/ft² (10.3 mm/min) over 2000 ft² (186 m²) and then increasing the design area to 3000 ft² (280 m²) and ending with 0.55 gpm/ft² (22.2 mm/min) over 3000 ft² (280 m²).
2. If the storage occupancy is adjacent to an extra hazard occupancy with a design area of 2500 ft² (232 m²), it is easier to determine if the storage demand is greater than the extra hazard design if you select a storage design at 2500 ft² (232 m²) on the curve.
3. The rules regarding area of coverage per sprinkler and the spacing rules of Table 10.2.4.2.1(d) are more flexible where the density is below 0.25 gpm/ft². You could select a point with a density less than 0.25 gpm/ft² (10.2 mm/min) to increase the sprinkler spacing and/or coverage area. Sticking with the example of curve C in Figure 25.2.3.2.3.1(b), if you select the point at the bottom of the curve — 0.255 gpm/ft² (10.3 mm/min) over 2000 ft² (186 m²) — you are limited to 12 ft (3.7 m) between sprinklers and a coverage area of 100 ft² (9 m²) per sprinkler. However, if you pick 0.245 gpm/ft² (10 mm/min) over 2200 ft² (205 m²), you are permitted to increase the sprinkler spacing to 15 ft (4.6 m) between sprinklers and the coverage area to 130 ft² (12.1 m²) per sprinkler. This spacing might make the sprinkler system significantly more economical.

Recognizing the potential value of the points between 2000 ft² (186 m²) and 3000 ft² (280 m²), the committee decided to keep these points on the curve. But the committee could see no legitimate reason to pick points above 3000 ft² (280 m²) and chose to eliminate them.

EDUFIRE.IR

CLOSER LOOK [25.2.3.2.1]

Understanding the CMDA Curves in Chapter 25

Each of the curves in these figures spans between the hundredth (0.01) grid line of each figure, with the density varying with an infinite degree of available accuracy values with movement along the curve. However, the degree of accuracy to be read from the curves is limited by the overall scale of the figure and the provided hundredth grid line in the figure. For measurements using a scale, the uncertainty of a measurement is half the smallest division of that scale. Therefore, for a reasonable degree of accuracy in reading the required density, it is suggested that the density be read to the nearest greater 0.005 gpm/ft^2.

If the user does not know this information, a more conservative route through the table might be necessary. For some situations, the higher hazard is easy to spot. For example, encapsulated storage is always more difficult to protect than nonencapsulated storage. But for some issues such as aisle width, it is harder for the novice user to determine which is the higher hazard. For rack storage protection, 4 ft (1.2 m) wide aisles are always more difficult to protect than 8 ft (2.4 m) aisles because the radiant heat from a fire makes it easier for the fire to cross a narrow aisle than to cross a wide one. Radiant heat transfer decreases exponentially with distance, so a small change in distance creates a much easier condition for fire fighting. To absorb radiant heat from the fire to prevent the fire from jumping the aisle, the discharge from a sprinkler protecting buildings with 4 ft (1.2 m) aisles must be much greater than the discharge from sprinklers protecting buildings with 8 ft (2.4 m) aisles. For aisles that are not exactly 4 ft (1.2 m) or 8 ft (2.4 m), see 25.2.3.2.1.1.

For each combination of hazards (storage height, commodity class, encapsulation, and aisle width), the user is given the following three pieces of information:

1. The correct figure to use — Figure 25.2.3.2.3.1(a) through Figure 25.2.3.2.3.1(g)
2. The correct curves to use from the figures — curves A through D
3. Whether it is appropriate to use the density adjustment of Figure 25.2.3.2.4.1 based on the storage height

For each combination of hazards, the user ends up with two potential curves to use. Which curve should be used depends on the type of sprinklers chosen to protect the storage occupancy. One curve will apply to ordinary-temperature sprinklers, while the other curve will apply to high-temperature sprinklers. It is important to remember that 25.2.3.1.3 allows ordinary-temperature sprinklers with K-factors of 11.2 (160) or greater to use the high-temperature curves. There are two ways to determine which curve applies to the ordinary-temperature situation and which curve applies to the high-temperature and ordinary-temperature K-11.2 (K-160) or larger situation. The first is to read the legend on the appropriate figure. The second is to examine the figure itself. The ordinary-temperature curve will always be farther to the right on the figures than the high-temperature and ordinary-temperature K-11.2 (K-160) or higher curve. Because the high-temperature and ordinary-temperature K-11.2 (K-160) sprinklers perform better and limit the number of sprinklers that open in a fire, their discharge criteria are more efficient and their curves appear further to the left on the figures. The following example illustrates how to use Table 25.2.3.2.1 to determine which figure to use for double-row rack storage 22 ft (6.7 m) high of Class III commodity (nonencapsulated) in a warehouse with 4 ft (1.2 m) wide aisles. The owner wants to install in-rack sprinklers.

Start with the first column of the table for storage between 20 ft and 22 ft (6.1 m and 6.7 m). Then following horizontally across the table starting with the parameters of Class III commodity, nonencapsulated, and 4 ft (1.2 m) aisle, the table indicates that one level of in-rack sprinklers is needed for the ceiling sprinkler design that will be given in the last three columns. With one level of in-rack sprinklers installed, the table indicates that curves C and D from Figure 25.2.3.2.3.1(c) should be used and that an adjustment to the density for the storage height per Figure 25.2.3.2.4.1 is not required. If ordinary-temperature K-11.2 (K-160) sprinklers are to be used, a point should be chosen from curve C such as 0.255 gpm/ft^2 over 2000 ft^2 (10.3 mm/min over 186 m^2) [since K-11.2 (K-160) or larger sprinklers can use the high-temperature curve regardless of the temperature rating]. Because an adjustment to the density per Figure 25.2.3.2.4.1 is not required, the final ceiling sprinkler system density/area criteria for this example would be 0.255 gpm/ft^2 over 2000 ft^2 (10.3 mm/min over 186 m^2).

A.25.2.3.2.1.1 The aisle width and the depth of racks are determined by material-handling methods. The widths of aisles should be considered in the design of the protection system. Storage in aisles can render protection ineffective and should be discouraged.

25.2.3.2.2 Multiple-Row Racks.

Experience and full-scale fire testing have revealed that there are two kinds of multiple-row racks: those that are easier to protect and those that are harder to protect. The factors that make a multiple-row rack easy or hard to protect are the depth of the racks and the width of the aisles separating the rack structures. For a multiple-row rack to be easier to protect, it must have a relatively shallow depth and have a wide aisle separating it from other rack structures. If both criteria cannot be met, the rack must be considered hard to protect.

NFPA 13 provides two different tables of discharge criteria for multiple-row racks 25 ft (7.6 m) in height or less being protected using a density/area approach: Table 25.2.3.2.2.1 for racks that are easier to protect

EDUFIRE.IR

and Table 25.2.3.2.2.2 for racks that are harder to protect. If a rack is more than 16 ft (4.9 m) deep, it does not matter how wide the aisles are that separate the rack from other rack structures; it must be considered a rack that is hard to protect, and the discharge criteria must come from Table 25.2.3.2.2.2.

25.2.3.2.2.1 For multiple-row racks, having a rack depth up to and including 16 ft (4.9 m) with aisles 8 ft (2.4 m) or wider, storing Class I through Class IV commodities, encapsulated or nonencapsulated, over 12 ft (3.7 m) and up to and including 25 ft (7.6 m) in height, Table 25.2.3.2.2.1 shall be used to determine the appropriate figure for determining ceiling-level sprinkler design criteria with the provision of in-rack sprinklers.

The aisle width indicated in Table 25.2.3.2.2.1 refers to the aisles between adjacent multiple-row rack structure arrays and not the aisles between individual racks that make up a multiple-row rack array itself. The table is to be used in the same manner as Table 25.2.3.2.1 (see the commentary pertaining to that table) except that encapsulation is addressed by increasing the design density by a fixed multiplier as opposed to using a separate curve. The design density obtained from the applicable curve is increased by 25 percent for encapsulated Class I, Class II, and Class III commodities, whereas the design density for an encapsulated Class IV commodity is increased by 50 percent. That adjustment is for the encapsulating plastic that helps the commodity shed water and stay dry, which makes it more difficult to keep the fire from spreading into the commodity due to a lack of prewetting.

TABLE 25.2.3.2.2.1 *Determining Appropriate Ceiling-Level Protection Criteria Figure for Multiple-Row Racks of Class I Through Class IV Commodities — Rack Depth Up to and Including 16 ft (4.9 m), Aisles 8 ft (2.4 m) or Wider, and Storage Height Over 12 ft (3.7 m) Up to 25 ft (7.6 m)*

Storage Height	Commodity Class	Encapsulated	No. of In-Rack Sprinkler Levels	Appropriate Figure and Curves		
				Figure	Apply Figure 25.2.3.2.4.1	Density Multiplier
Over 12 ft (3.7 m) and up to and including 15 ft (4.6 m)	I	No	1 Level	25.2.3.2.3.1(a)	Yes	1.0
		Yes				1.25
	II	No		25.2.3.2.3.1(b)		1.0
		Yes				1.25
	III	No		25.2.3.2.3.1(c)		1.0
		Yes				1.25
	IV	No		25.2.3.2.3.1(d)		1.0
		Yes				1.5
Over 15 ft (4.6 m) and up to and including 20 ft (6.1 m)	I	No	1 Level	25.2.3.2.3.1(a)	Yes	1.0
		Yes				1.25
	II	No		25.2.3.2.3.1(b)		1.0
		Yes				1.25
	III	No		25.2.3.2.3.1(c)		1.0
		Yes				1.25
	IV	No		25.2.3.2.3.1(d)		1.0
		Yes				1.5
Over 20 ft (6.1 m) and up to and including 25 ft (7.6 m)	I	No	1 Level	25.2.3.2.3.1(a)	No	1.0
		Yes				1.25
	II	No		25.2.3.2.3.1(b)		1.0
		Yes				1.25
	III	No		25.2.3.2.3.1(c)		1.0
		Yes				1.25
	IV	No	2 Levels	25.2.3.2.3.1(d)		1.0
		Yes	2 Levels			1.5

EDUFIRE.IR

25.2.3.2.2.2 For multiple-row racks, having a rack depth over 16 ft (4.9 m) or aisles less than 8 ft (2.4 m) wide, storing Class I through Class IV commodities, encapsulated or nonencapsulated, over 12 ft (3.7 m) and up to and including 25 ft (7.6 m) in height, Table 25.2.3.2.2.2 shall be used to determine the appropriate figure for determining ceiling-level sprinkler design criteria with the provision of in-rack sprinklers.

The aisle width indicated in Table 25.2.3.2.2.2 refers to the aisles between adjacent multiple-row rack structure arrays and not the aisles between individual racks that make up a multiple-row rack array itself. Table 25.2.3.2.2.2 is to be used in the same manner as Table 25.2.3.2.1 (see the commentary pertaining to that table) except that encapsulation is addressed by increasing the design density by a fixed multiplier as opposed to using a separate curve. The design density obtained from the applicable curve is increased by 25 percent for encapsulated Class I, Class II, and Class III commodities, whereas the design density for an encapsulated Class IV commodity is increased by 50 percent. That adjustment is for the encapsulating plastic that helps the commodity shed water and stay dry, which makes it more difficult to keep the fire from spreading into the commodity due to a lack of prewetting.

TABLE 25.2.3.2.2.2 *Determining Appropriate Ceiling-Level Protection Criteria Figure for Multiple-Row Racks of Class I Through Class IV Commodities — Rack Depth Over 16 ft (4.9 m) or Aisles Narrower than 8 ft (2.4 m), Storage Height Over 12 ft (3.7 m) Up to and Including 25 ft (7.6 m)*

Storage Height	*Commodity Class*	*Encapsulated*	*No. of In-Rack Sprinkler Levels*	*Appropriate Figure and Curves*			
				Figure	*Curves*	*Apply Figure 25.2.3.2.4.1*	*Density Multiplier*
Over 12 ft (3.7 m) and up to and including 15 ft (4.6 m)	I	No	1 Level	25.2.3.2.3.1(a)	C and D	Yes	1.0
		Yes					1.25
	II	No		25.2.3.2.3.1(b)			1.0
		Yes					1.25
	III	No		25.2.3.2.3.1(c)			1.0
		Yes					1.25
	IV	No		25.2.3.2.3.1(d)			1.0
		Yes					1.5
Over 15 ft (4.6 m) and up to and including 20 ft (6.1 m)	I	No	1 Level	25.2.3.2.3.1(a)	C and D	Yes	1.0
		Yes					1.25
	II	No		25.2.3.2.3.1(b)			1.0
		Yes					1.25
	III	No		25.2.3.2.3.1(c)			1.0
		Yes					1.25
	IV	No		25.2.3.2.3.1(d)			1.0
		Yes					1.5
Over 20 ft (6.1 m) and up to and including 25 ft (7.6 m)	I	No	1 Level	25.2.3.2.3.1(a)	C and D	No	1.0
		Yes					1.25
	II	No		25.2.3.2.3.1(b)			1.0
		Yes					1.25
	III	No		25.2.3.2.3.1(c)			1.0
		Yes					1.25
	IV	No	2 Levels	25.2.3.2.3.1(d)			1.0
		Yes					1.5

EDUFIRE.IR

25.2.3.2.3 Ceiling-Level Protection, Used in Combination with In-Rack Sprinklers, Criteria Figures.

25.2.3.2.3.1* The ceiling-level sprinkler design criteria in terms of density [gpm/ft^2 (mm/min)] and area of sprinkler operation [ft^2 (m^2) of ceiling or roof sprinklers] obtained from the appropriate density/area curves of Figure 25.2.3.2.3.1(a) through Figure 25.2.3.2.3.1(g) shall be modified as appropriate by 25.2.3.2.4. These requirements shall apply to portable racks arranged in the same manner as single-, double-, or multiple-row racks. *(See Section C.14.)*

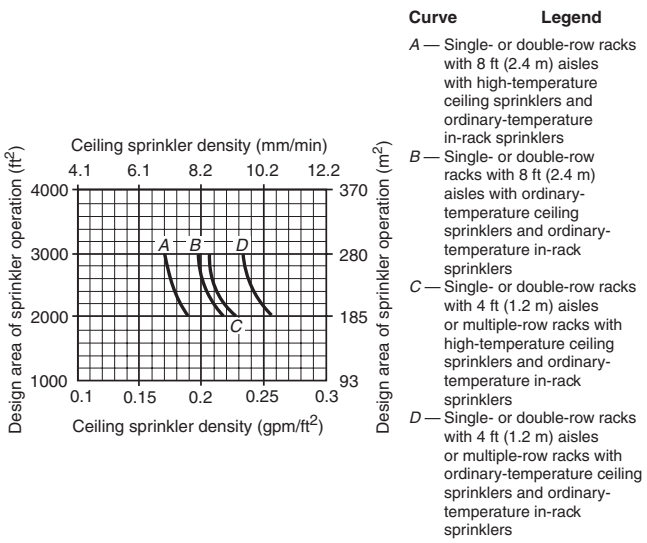

FIGURE 25.2.3.2.3.1(a) *CMDA Sprinkler System Design Curves — 20 ft (6.1 m) High Rack Storage —Class I Nonencapsulated Commodities — Conventional Pallets.*

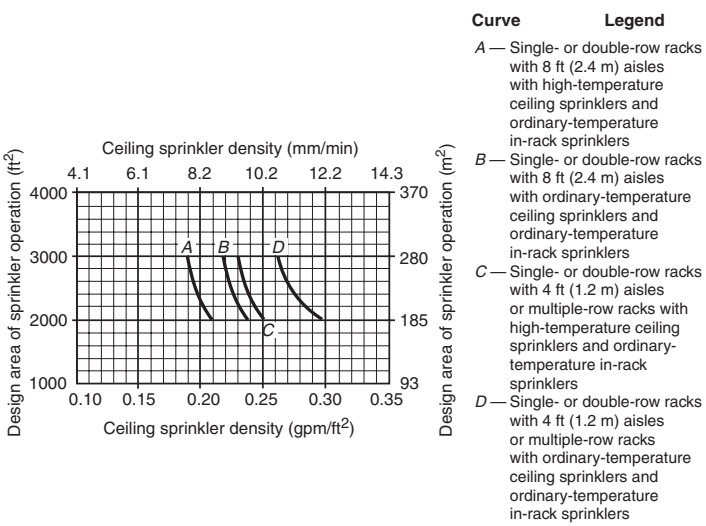

FIGURE 25.2.3.2.3.1(b) *CMDA Sprinkler System Design Curves — 20 ft (6.1 m) High Rack Storage — Class II Nonencapsulated Commodities — Conventional Pallets.*

EDUFIRE.IR

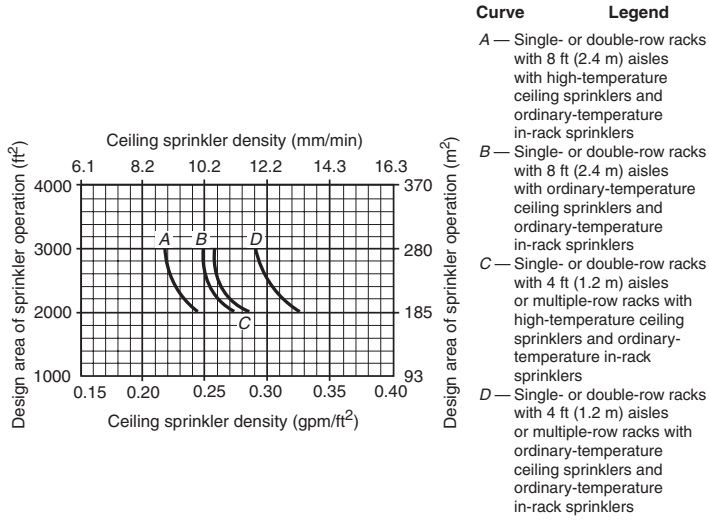

FIGURE 25.2.3.2.3.1(c) *CMDA Sprinkler System Design Curves — 20 ft (6.1 m) High Rack Storage — Class III Nonencapsulated Commodities — Conventional Pallets.*

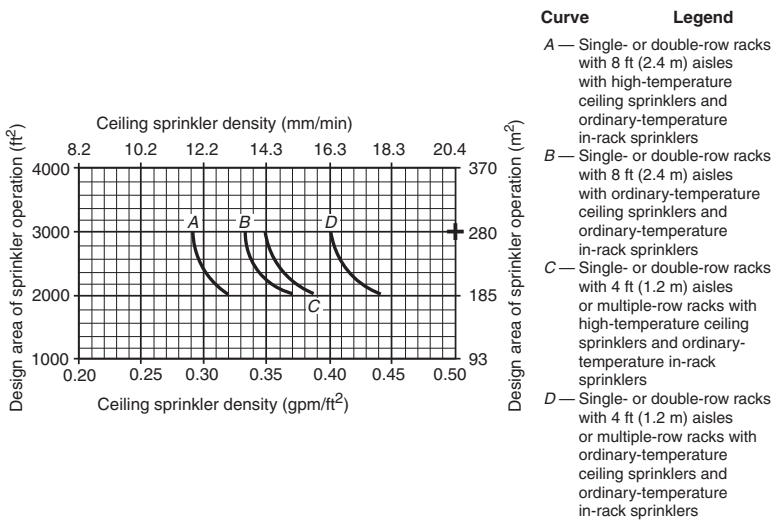

FIGURE 25.2.3.2.3.1(d) *CMDA Sprinkler System Design Curves — 20 ft (6.1 m) High Rack Storage — Class IV Nonencapsulated Commodities — Conventional Pallets.*

Figure 25.2.3.2.3.1(a) through Figure 25.2.3.2.3.1(g) show the density/area curves for Class I through Class IV commodities that are stored 20 ft (6.1 m) in height. For storage that is not exactly 20 ft (6.1 m), the density taken from Figure 25.2.3.2.3.1(a) through Figure 25.2.3.2.3.1(g) should be multiplied by the modifier shown in Figure 25.2.3.2.4.1 when indicated to do so by Table 25.2.3.2.1, Table 25.2.3.2.2.1, or Table 25.2.3.2.2.2.

The density/area curves of Figure 25.2.3.2.3.1(a) through Figure 25.2.3.2.3.1(g) were developed from full-scale fire tests and experience with ordinary-temperature sprinklers having K-factors of 5.6 (80) and

EDUFIRE.IR

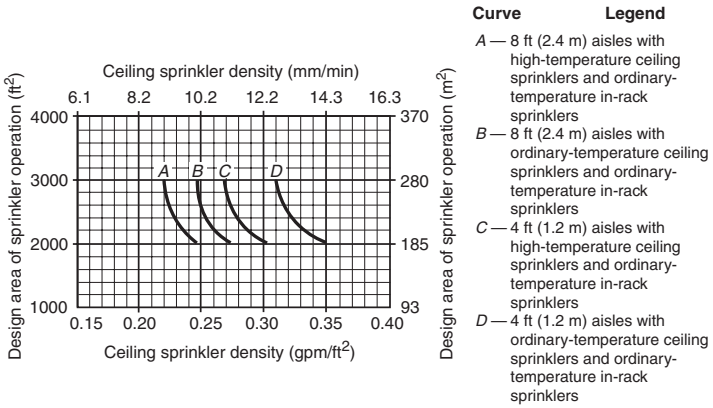

FIGURE 25.2.3.2.3.1(e) *CMDA Sprinkler System Design Curves — Single- or Double-Row Racks — 20 ft (6.1 m) High Rack Storage — Class I and Class II Encapsulated Commodities — Conventional Pallets.*

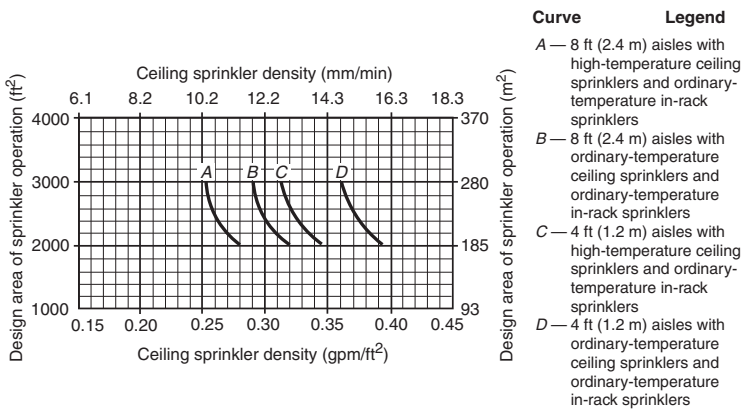

FIGURE 25.2.3.2.3.1(f) *CMDA Sprinkler System Design Curves — Single- or Double-Row Racks — 20 ft (6.1 m) High Rack Storage — Class III Encapsulated Commodities — Conventional Pallets.*

8.0 (115) more than 30 years ago. Since that time, additional full-scale tests have been performed to show that ordinary-temperature sprinklers with larger K-factors [11.2 (160) and higher] perform better than indicated in those density/area curves and should not be limited to those curves. Therefore, 25.2.3.1.5 permits ordinary-temperature sprinklers with K-factors of 11.2 (160) or greater to use the density/area criteria indicated for high-temperature sprinklers.

Where intermediate-temperature sprinklers are used, the same discharge criteria should be followed as for ordinary-temperature sprinklers. This means that if an intermediate-temperature sprinkler with a K-factor of 5.6 (80) or 8.0 (115) is used, the density/area criteria indicated for ordinary-temperature sprinklers in Figure 25.2.3.2.3.1(a) through Figure 25.2.3.2.3.1(g) must be used. If an intermediate-temperature sprinkler with a K-factor of 11.2 (160) or greater is used, the density/area criteria for a high-temperature sprinkler can be used.

The requirements in 25.2.3.1.3 through 25.2.3.1.5 of NFPA 13 limit the orifice size of the sprinkler permitted to be used based on the final density after modifications are applied. K-5.6 (K-80) sprinklers can

EDUFIRE.IR

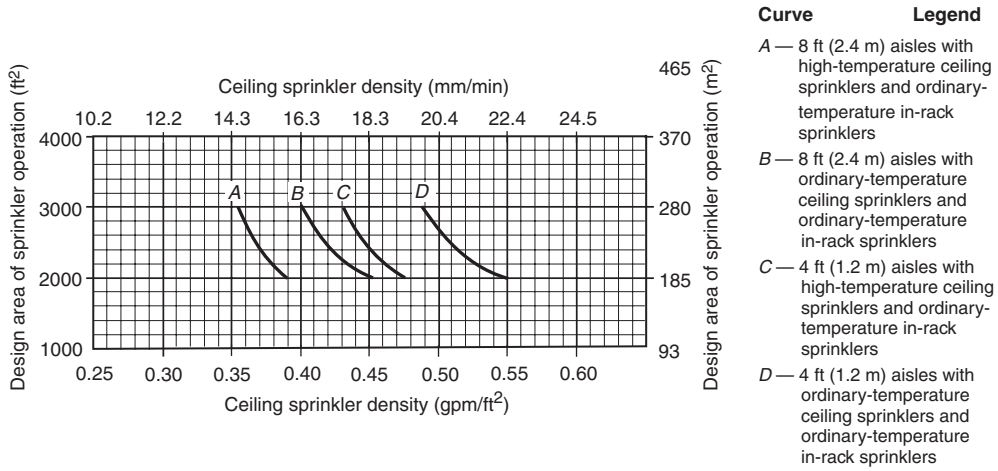

FIGURE 25.2.3.2.3.1(g) *CMDA Sprinkler System Design Curves — Single- or Double-Row Racks — 20 ft (6.1 m) High Rack Storage — Class IV Encapsulated Commodities — Conventional Pallets.*

be used only if the final density is 0.2 gpm/ft² (8.2 mm/min) or less. K-8.0 (K-115) sprinklers can be used only if the final density is 0.34 gpm/ft² (13.9 mm/min) or less. If the density is greater than 0.34 gpm/ft² (13.9 mm/min), then a sprinkler with a K-factor of 11.2 (160) or greater needs to be used. These rules, together with the requirements in 25.2.3.1.9, limit the practical application of Figure 25.2.3.2.3.1(a) through Figure 25.2.3.2.3.1(g) to lower storage heights of lower commodity classifications. If the user needs to protect higher storage heights of higher commodity classification, a point can be selected on the curve above 2000 ft² (186 m²) so that after modification the density is below 0.34 gpm/ft² (13.9 mm/min).

For example, if a building is being designed with K-8.0 (K-115) ordinary-temperature ceiling sprinklers and one level of in-rack sprinklers to store nonencapsulated Class III commodities 25 ft (7.6 m) high in open double-row racks with 8 ft (2.4 m) wide aisles, the user could select a point of 0.275 gpm/ft² over 2000 ft² (11.2 mm/min over 186 m²) from curve B in Figure 25.2.3.2.3.1(c), which is within the limit of 0.34 gpm/ft² (13.9 mm/min). In this case, K-8.0 (K-115) sprinklers would be allowed.

C.14 [21.4.1.1 and 25.2.3.2.3.1] Tests 65 and 66, compared with Test 69, and Test 93, compared with Test 94, indicated a reduction in areas of application of 44.5 percent and 45.5 percent, respectively, with high temperature–rated sprinklers as compared with ordinary temperature–rated sprinklers. Other extensive Factory Mutual tests produced an average reduction of 40 percent. Design curves are based on this area reduction. In constructing the design curves, the high-temperature curves above 3600 ft² (335 m²) of application, therefore, represent 40 percent reductions in area of application of the ordinary temperature curves in the 6000 ft² to 10,000 ft² (555 m² to 930 m²) range.

Test 84 indicated the number of intermediate temperature–rated sprinklers operating is essentially the same as ordinary temperature–rated sprinklers.

A.25.2.3.2.3.1 Data indicate that the sprinkler protection criteria in Figure 25.2.3.2.3.1(a) through Figure 25.2.3.2.3.1(g) are ineffective, by themselves, for rack storage with solid shelves, if the required flue spaces are not maintained. Use of Figure 25.2.3.2.3.1(a) through Figure 25.2.3.2.3.1(g), along with the additional provisions that are required by this standard, can provide acceptable protection.

25.2.3.2.4* Ceiling Sprinkler Density Adjustments.

The protection criteria discussed in this chapter might need to be further adjusted based on special conditions that might exist. Paragraph 25.2.3.2.4 and its subparagraphs outline those special conditions, which in most cases, allow ceiling sprinkler densities to be reduced for situations where extra (more than the

EDUFIRE.IR

minimum required) in-rack sprinklers are installed or where low clearance exists between the top of storage and the ceiling of the room. However, there are other special situations, which are also listed here, that require the sprinkler density to increase. The user of NFPA 13 should read these paragraphs carefully and apply the adjustments if conditions warrant.

A.25.2.3.2.4 The adjustments in 25.2.3.2.4 apply to solid shelves where the minimum required level of in-rack sprinklers from an open rack option is exceeded.

The installation of in-rack sprinklers to protect beneath solid shelves that also exceed the minimum number of in-rack sprinklers normally required for an open rack allow for a reduction in the required ceiling density under the provisions of 25.2.3.2.4.1 where CMDA sprinklers are installed at ceiling level. This change would allow both the 20 percent reduction in required ceiling density where more than the minimum number of in-rack sprinklers are installed (but not in every tier) and the 40 percent reduction in the required ceiling density where in-rack sprinklers are installed between every tier as provided in Table 25.2.3.2.4.2.

25.2.3.2.4.1 Where in-rack sprinklers are being installed within racks of Class I through Class IV commodities stored over 12 ft (3.7 m) up to and including 20 ft (6.1 m) protected with CMDA sprinklers at ceiling level along with the minimum number of required in-rack sprinkler levels, densities obtained from design curves shall be adjusted in accordance with Figure 25.2.3.2.4.1.

Figure 25.2.3.2.4.1 is used to adjust the density for certain storage configurations as outlined in 25.2.3.2.4.1 and designated in Table 25.2.3.2.1, Table 25.2.3.2.2.1, and Table 25.2.3.2.2.2. The base protection criteria assume a storage height of 20 ft (6.1 m) because that was the storage height used for most of the full-scale fire tests that originally were performed to create this protection. Note that the 100 percent adjustment point on the curve in Figure 25.2.3.2.4.1 runs through the 20 ft (6.1 m) storage height. Rack storage less than 20 ft (6.1 m) in height is allowed to have a reduced density (adjustment less than 100 percent). Storage over 20 ft (6.1 m), however, is not required to be adjusted per Figure 25.2.3.2.4.1 since the rack storage is protected with in-rack sprinklers.

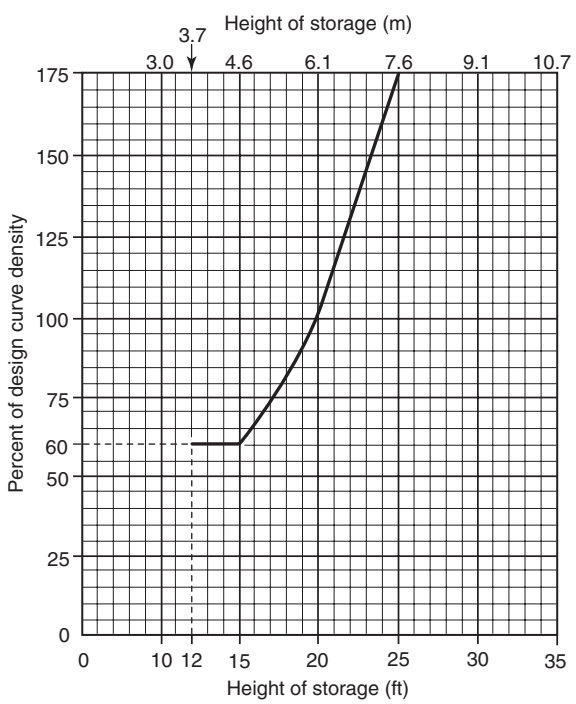

FIGURE 25.2.3.2.4.1 *Adjustment to Ceiling-Level Sprinkler Density Due to Storage Height.*

EDUFIRE.IR

25.2.3.2.4.2 Where in-rack sprinklers are being installed within racks of Class I through Class IV commodities stored over 12 ft (3.7 m) and up to and including 20 ft (6.1 m) in height protected with CMDA sprinklers at ceiling level along with more than one level of in-rack sprinklers, but not in every tier, densities obtained from design curves and adjusted in accordance with Figure 25.2.3.2.4.1 shall be permitted to be reduced an additional 20 percent, as indicated in Table 25.2.3.2.4.2.

TABLE 25.2.3.2.4.2 *Adjustment to Ceiling-Level Sprinkler Density Due to Storage Height and In-Rack Sprinklers*

Storage Height	*In-Rack Sprinklers*	*Apply Figure 25.2.3.2.4.1*	*Permitted Ceiling-Level Sprinkler Density Adjustment Due to In-Rack Sprinklers*
Over 12 ft (3.7 m) and up to and including 20 ft (6.1 m)	Minimum required	Yes	None
	More than required but not in every tier	Yes	Reduce density 20% from that for minimum in-rack sprinklers
	Every tier level	Yes	Reduce density 40% from that for minimum in-rack sprinklers
Over 20 ft (6.1 m) and up to and including 25 ft (7.6 m)	Minimum required	No	None
	More than required but not in every tier	No	Reduce density 20% from that for minimum in-rack sprinklers
	Every tier level	No	Reduce density 40% from that for minimum in-rack sprinklers

Table 25.2.3.2.4.2 summarizes situations in which ceiling sprinkler discharge can be reduced where extra levels of in-rack sprinklers are installed (all of which are spelled out in 25.2.3.2.4.2 through 25.2.3.2.4.6). Text was added to A.25.2.3.2.4.3 in the 2016 edition to clarify that in-rack sprinklers need not be installed above the top tier of storage to qualify for the permitted "in every tier" reduction. The installation of extra in-rack sprinklers can reduce ceiling sprinkler demand because when extra in-rack sprinklers help control the fire lower down on the racks, the ceiling sprinklers will be dealing with less fire. This is an excellent way to increase the efficiency of a sprinkler system for a rack storage warehouse with a marginal water supply.

The following is an example of an adjustment for in-rack sprinklers protecting a nonencapsulated Class III commodity stored to a height of 20 ft (6.1 m) in double-row racks with 4 ft (1.2 m) aisles with high-temperature sprinklers at the ceiling and one level of in-rack sprinklers. Table 25.2.3.2.1, which references Figure 25.2.3.2.3.1 (curve C), would require a density of 0.29 gpm/ft^2 (11.6 mm/min) over 2000 ft^2 (186 m^2). However, because in-rack sprinklers need to be installed anyway, the designer might choose the option of using more than the minimum level of in-rack sprinklers required. If a second level of in-rack sprinklers were installed, the ceiling sprinkler density could be reduced by 20 percent per Table 25.2.3.2.4.2, which would result in a required density of 0.23 gpm/ft^2 (9.3 mm/min) over 2000 ft^2 (186 m^2). If in-rack sprinklers were added at every level, the ceiling sprinkler density could be reduced by 40 percent per Table 25.2.3.2.4.2, which would result in a required density of 0.17 gpm/ft^2 (7.0 mm/min) over 2000 ft^2 (186 m^2).

25.2.3.2.4.3* Where in-rack sprinklers are being installed within racks of Class I through Class IV commodities stored over 12 ft (3.7 m) and up to and including 20 ft (6.1 m) in height protected with CMDA sprinklers at ceiling level along with in-rack sprinklers at each tier level, densities obtained from design curves and adjusted in accordance with Figure 25.2.3.2.4.1 shall be permitted to be reduced an additional 40 percent, as indicated in Table 25.2.3.2.4.2.

A.25.2.3.2.4.3 It is not the intent that an in-rack sprinkler be installed above the top-tier of storage when utilizing "in-rack sprinklers at each tier level."

EDUFIRE.IR

25.2.3.2.4.4 Where in-rack sprinklers are being installed within racks of Class I through Class IV commodities stored over 20 ft (6.1 m) and up to and including 25 ft (7.6 m) in height protected with CMDA sprinklers at ceiling level along with the minimum number of required in-rack sprinkler levels, densities obtained from design curves shall be used. Densities shall not be adjusted in accordance with Figure 25.2.3.2.4.1.

The protection required for storage heights above 20 ft (6.1 m) — with one level of in-rack sprinklers per 25.2.3.2.3, Table 25.2.3.2.2.1, or Table 25.2.3.2.2.2 — is not required to be increased further in accordance with Figure 25.2.3.2.4.1. The penalty is not necessary because the in-rack sprinklers help control the fire.

25.2.3.2.4.5 Where in-rack sprinklers are being installed within racks of Class I through Class IV commodities stored over 20 ft (6.1 m) and up to and including 25 ft (7.6 m) in height protected with CMDA sprinklers at ceiling level along with more than the minimum required level of in-rack sprinklers, but not in every tier, densities obtained from design curves shall be permitted to be reduced 20 percent, as indicated in Table 25.2.3.2.4.2. Densities shall not be adjusted in accordance with Figure 25.2.3.2.4.1 for storage height.

25.2.3.2.4.6 Where in-rack sprinklers are being installed within racks of Class I through Class IV commodities stored over 20 ft (6.1 m) and up to and including 25 ft (7.6 m) in height protected with CMDA sprinklers at ceiling level along with in-rack sprinklers at each tier level, except above the top tier, densities obtained from design curves shall be permitted to be reduced 40 percent, as indicated in Table 25.2.3.2.4.2. Densities shall not be adjusted in accordance with Figure 25.2.3.2.4.1 for storage height.

25.2.3.3 Rack Storage of Class I Through Class IV Commodities Over 25 ft (7.6 m) in Height.

25.2.3.3.1* Single- and Double-Row Racks. Where in-rack sprinklers are being installed within single- and double-row racks separated by aisles at least 4 ft (1.2 m) wide and with a clearance to ceiling up to and including 10 ft (3.0 m) of Class I through Class IV commodities stored over 25 ft (7.6 m) in height protected by CMDA sprinklers at ceiling level, the ceiling sprinkler designs shall be in accordance with Table 25.2.3.3.1.

TABLE 25.2.3.3.1 *CMDA Ceiling-Level Sprinkler Design Criteria for Single- or Double-Row Racks of Class I Through Class IV Commodities Stored Over 25 ft (7.6 m) in Height with Aisles 4 ft (1.2 m) or More in Width, Clearance to Ceiling Up to and Including 10 ft (3.0 m) Supplemented with In-Rack Sprinklers*

Commodity Class	*Applicable In-Rack Sprinkler Installation Figures*	*Encapsulated*	*Ceiling Sprinkler Density, Clearance to Ceiling Up to 10 ft (3.0 m)*				*Ceiling Sprinkler Operating Area*	
			Ordinary Temperature		*High Temperature*			
			gpm/ft²	*mm/min*	*gpm/ft²*	*mm/min*	*ft²*	*m²*
I	25.9.2.2.1(a)–(b)	No	0.25	10.2	0.35	14.3	2000	185
		Yes	0.31	12.8	0.44	17.9		
I, II, III	25.9.2.2.1(c)–(g)	No	0.3	12.2	0.4	16.3		
		Yes	0.37	15.3	0.5	20.4		
I, II, III, IV	25.9.2.2.1(h)–(j)	No	0.35	15.1	0.45	18.3		
		Yes	0.44	17.9	0.56	22.8		

Direction for the ceiling sprinkler design densities protecting storage on single- and double-row racks is in Table 25.2.3.3.1 and is based on a maximum ceiling clearance of 10 ft (3.0 m). Table 25.2.3.3.1 covers the 10 in-rack sprinkler arrangements shown in Figure 25.9.2.2.1(a) through Figure 25.9.2.2.1(j). All 10 are applicable for protection of Class I commodities, eight are applicable to Class I through Class III commodities,

EDUFIRE.IR

CLOSER LOOK [25.3.2.2.1]

Using CMDA to Protect Class I Through Class IV Commodity Storage Over 25 ft (7.6 m)

The term *control mode density/area (CMDA) sprinkler* refers to the standard spray sprinkler that has been used extensively for sprinkler protection since 1955 and has a K-factor of 5.6 (80) or larger. The protection criteria for this type of sprinkler are provided in terms of density (flow divided by the area of coverage of the sprinkler) and area of sprinkler operation, which taken together translate into the maximum number of sprinklers expected to open in a fire event. Similar types of spray sprinklers can also be listed as control mode specific application (CMSA) sprinklers. The protection criteria for CMSA sprinklers are provided in terms of the minimum water pressure necessary at the sprinkler and the number of sprinklers in the design area. Protection criteria for CMSA sprinklers for rack storage of Class I through Class IV commodities greater than 25 ft (7.6 m) in height are found in 25.5.2.3.

Where CMDA sprinklers are used for the protection of storage that exceeds 25 ft (7.6 m) in height, the ceiling sprinklers are used primarily to protect the commodity between the top level of required in-rack sprinklers and the top of storage. In addition, ceiling cooling and structural protection are provided by the ceiling sprinklers. The in-rack protection is expected to control the growth and spread of fire within the rack structure at the lower levels. That is why the ceiling density is the same for the protection of 30 ft (9.1 m) of storage and 75 ft (23 m) of storage where the amount of storage above the highest level of in-rack sprinklers is the same.

Regardless of whether the plastics are in cartons or are exposed unexpanded plastics, the ceiling sprinkler protection rules are the same because the ceiling sprinklers need to protect only the storage above the highest level of in-rack sprinklers. Table 25.2.3.5 requires the minimum density for the ceiling sprinklers to be 0.30 gpm/ft over 2000 ft^2 (12.2 mm/min over 186 m^2) where storage above the top level of in-rack sprinklers is 5 ft (1.5 m) or less. The density goes up to 0.45 gpm/ft^2 over 2000 ft^2 (18.3 mm/min over 186 m^2) where the storage above the top level of in-rack sprinklers exceeds 5 ft (1.5 m).

This criterion holds until the storage above the top level of sprinklers reaches 10 ft (3.0 m). According to the rules for in-rack sprinkler placement, that is the maximum storage allowed above the top level of in-rack sprinklers. If storage over the top level of in-rack sprinklers exceeds 10 ft (3.0 m), another level of in-rack sprinklers would be required (see 25.2.3.5).

and only three are applicable to Class I through Class IV commodities. Additionally, two entries are limited to storage heights of not more than 30 ft (9.1 m) — one for Class I and the other for Class I through Class III commodities. By selecting the commodity classification and storage height to be protected, the available design options for in-rack layout can be identified, along with the required ceiling density/design area. The ceiling sprinkler density is dependent on the temperature rating of the ceiling sprinklers. It is important to remember that 25.2.3.1.9 allows ordinary-temperature sprinklers with K-factors of 11.2 (160) or greater to use the high-temperature design density.

Once the applicable in-rack sprinkler layout options have been identified, the user should review each of the notes associated with the individual layouts along with note d for Table 25.9.2.2.1, as applicable, to ensure a full understanding of the required layout of in-rack sprinklers for the particular storage arrangement in question.

A.25.2.3.3.1 Water demand for storage height over 25 ft (7.6 m) on racks separated by aisles at least 4 ft (1.2 m) wide and with more than 10 ft (3.0 m) between the top of storage and the sprinklers should be based on sprinklers in a 2000 ft^2 (185 m^2) operating area for double-row racks and a 3000 ft^2 (280 m^2) operating area for multiple-row racks discharging a minimum of 0.18 gpm/ft^2 (7.3 mm/min) for Class I commodities, 0.21 gpm/ft^2 (8.6 mm/min) for Class II and Class III commodities, and 0.25 gpm/ft^2 (10.2 mm/min) for Class IV commodities for ordinary temperature–rated sprinklers or a minimum of 0.25 gpm/ft^2 (10.2 mm/min) for Class I commodities, 0.28 gpm/ft^2 (11.4 mm/min) for Class II and Class III commodities, and 0.32 gpm/ft^2 (13 mm/min) for Class IV commodities for high temperature–rated sprinklers. *(See A.25.9.2.3.1.)* Where such storage is encapsulated, ceiling sprinkler density should be 25 percent greater than for nonencapsulated storage. Data indicate that the sprinkler protection criteria in 25.2.3.3.1 are ineffective, by themselves, for rack storage with solid shelves if the required flue spaces are not maintained. Use of 25.2.3.3.1, along with the additional provisions that are required by this standard, can provide acceptable protection.

EDUFIRE.IR

Encapsulated storage is much more difficult to protect than nonencapsulated storage because of the plastic covering over the top of the storage array. CMDA sprinklers help control a fire by prewetting adjacent combustibles ahead of the advancing flame front, thereby limiting fire spread. But with encapsulation of the storage array, water is shed and is not absorbed into the commodities adjacent to the fire. That prevents the commodity from getting wet and makes it easier for the fire to spread to the commodities. As a result, encapsulated storage arrangements require an increased ceiling density to help deal with the water shedding capability.

25.2.3.3.2 Multiple-Row Racks. Where in-rack sprinklers are being installed within multiple-row racks separated by aisles at least 4 ft (1.2 m) wide and with a clearance to ceiling up to and including 10 ft (3.0 m) of Class I through Class IV commodities stored over 25 ft (7.6 m) in height protected by CMDA sprinklers at ceiling level, the ceiling sprinkler designs shall be in accordance with Table 25.2.3.3.2.

Direction for the ceiling sprinkler design densities protecting storage on multiple-row racks is found in Table 25.2.3.3.2 and is based on a maximum ceiling clearance of 10 ft (3.0 m).

Table 25.2.3.3.2 covers three groupings involving in-rack sprinklers. All three are applicable for protection of Class I commodities, two are applicable to Class I through Class III commodities, and only one is applicable to Class I through Class IV commodities. By selecting the commodity classification, including encapsulation, to be protected, the required ceiling density/design area can be identified; the permissible in-rack sprinkler layouts are found in 25.9.2.3. The ceiling sprinkler density is dependent on the temperature rating of the ceiling sprinklers. It is important to remember that 25.2.3.1.9 allows ordinary-temperature sprinklers with K-factors of 11.2 (160) or greater to use the high-temperature design density. The density/area criteria in the table cover both encapsulated and unencapsulated commodities. The densities for the encapsulated commodities incorporate a 25 percent increase to account for the water shed from the encapsulated plastic.

Once the applicable in-rack sprinkler layout options have been identified, the user should review each of the notes associated with the individual layouts to ensure a full understanding of the required layout of in-rack sprinklers for the particular storage arrangement in question.

TABLE 25.2.3.3.2 *CMDA Ceiling-Level Sprinkler Design Criteria for Multiple-Row Racks of Class I Through Class IV Commodities Stored Over 25 ft (7.6 m) in Height, Clearance to Ceiling Up to and Including 10 ft (3.0 m) Supplemented with In-Rack Sprinklers*

Commodity Class	Encapsulated	Maximum Allowable Storage Height Above Top In-Rack Sprinkler Level		Ceiling Sprinkler Density, Clearance to Ceiling Up to 10 ft (3.0 m)				Ceiling Sprinkler Operating Area	
				Ordinary Temperature		High Temperature			
		ft	m	gpm/ft²	mm/min	gpm/ft²	mm/min	ft²	m²
I	No	10	3.0	0.25	10.2	0.35	14.3	2000	185
	Yes			0.31	12.6	0.44	17.9		
I, II, III	No	10	3.0	0.3	12.2	0.4	16.3		
	Yes			0.37	15.1	0.5	20.4		
I, II, III, IV	No	5	1.5	0.35	14.3	0.45	18.3		
	Yes			0.44	17.9	0.56	22.8		

Encapsulated storage is much more difficult to protect than nonencapsulated storage because of the plastic covering over the top of the storage array. CMDA sprinklers help control a fire by prewetting adjacent combustibles ahead of the advancing flame front, thereby limiting fire spread. But with encapsulation of the storage array, water is shed and is not absorbed into the commodities adjacent to the fire. That prevents the commodity from getting wet and makes it easier for the fire to spread to the commodities. As a result, encapsulated storage arrangements require an increased ceiling density to help deal with the water shedding capability.

EDUFIRE.IR

25.2.3.4 Rack Storage of Group A Plastic Commodities Stored Over 5 ft (1.5 m) and Up to and Including 25 ft (7.6 m) in Height.

25.2.3.4.1 Cartoned Group A Plastic Commodities.

25.2.3.4.1.1 Where rack storage of cartoned Group A plastic commodities, encapsulated or nonencapsulated, having a clearance to ceiling up to and including 10 ft (3.0 m) is protected by in-rack sprinklers, ceiling-level sprinkler designs in terms of density [gpm/ft^2 (mm/min)] and area of operation [ft^2 (m^2)] shall be selected from Figure 25.9.3.1(a) through Figure 25.9.3.1(e).

Paragraph 25.2.3.4.1.1 and its associated figures [Figures 25.9.3.1(a) through 25.9.3.1(e)] are allowed to be used to protect only rack storage of plastics in cartons. Rack storage of exposed nonexpanded plastics using CMDA design criteria can be protected in accordance with 25.2.3.4.2 and its associated figures [Figure 25.9.3.3(a) through Figure 25.9.3.3(k)]. At this time, rack storage of exposed expanded plastics cannot be protected using CMDA and CMSA ceiling sprinklers in accordance with NFPA 13. The only protection requirements included in NFPA 13 for exposed expanded plastics are provided in Section 23.7 and use ESFR sprinklers. Those requirements were developed from a test program completed by the Fire Protection Research Foundation (FPRF).

CLOSER LOOK [25.2.3.4]

Using CMDA to Protect Group A Plastic Storage Under 25 ft (7.6 m) in Height

As explained in 25.2.3.4.1.1, NFPA 13 provides a number of figures to illustrate the different potential combinations of CMDA ceiling sprinkler and in-rack sprinkler criteria options for protecting different combinations of storage heights up to 25 ft (7.6 m) and ceiling heights. See Figure 25.9.3.1(a) through Figure 25.9.3.1(e) for the protection of cartoned Group A plastics and Figure 25.9.3.3(a) through Figure 25.9.3.3(k) for the protection of exposed nonexpanded Group A plastics. In some cases, the options are shown graphically in the figures. In other cases, the options are explained in the notes. All the options are considered equivalent in providing a minimum level of acceptable protection. The user is permitted to select any one of the options, provided that all the rules associated with that option are followed. In some combinations of storage height and ceiling height, many options are presented. In other combinations of storage height and ceiling height, only one option is presented. Where fewer options are presented, there is a lack of successful fire testing to support additional options at this time.

In the options for each figure, the "o" and "x" characters indicate where the in-rack sprinklers should be located in the racks (see A.25.9.3.2 for an explanation of what the "o" and "x" characters mean).

Each figure shows a plan view and an elevation view of a single-row rack, a double-row rack, and two variations of multiple-row racks. The plan view shows the horizontal spacing of in-rack sprinklers in each type of rack configuration. The elevation view shows the vertical spacing of in-rack sprinklers for each rack configuration. With each storage cube measuring 4 ft to 5 ft (1.2 m to 1.5 m) represented in each dimension, the maximum spacing between in-rack sprinklers, both horizontally and vertically, can be determined by the number of storage cubes between the illustrated in-rack sprinkler positions where a maximum dimension is not otherwise shown. It is important to note that the location of the in-rack sprinklers with respect to the available flue spaces must also meet the provisions of 25.5.1.2, 25.5.1.3, and 25.5.1.4.

For example, Figure 25.9.3.1(c) provides four options for protection of rack storage of cartoned Group A plastics stored up to 20 ft (6.1 m) in height in a 30 ft (9.1 m) high building with 5 ft to 10 ft (1.5 m to 3.0 m) of clearance. The first option is in the upper left corner of the figure with ceiling sprinkler discharge criteria of 0.45 gpm/ft^2 over 2000 ft^2 (18.3 mm/min over 186 m^2) and one level of in-rack sprinklers approximately halfway up the rack with the in-rack sprinklers spaced at every other transverse flue space [a maximum of 10 ft (3.0 m) apart].

The second option, in the upper right corner of the figure, decreases the ceiling sprinkler discharge to 0.30 gpm/ft^2 over 2000 ft^2 (12.2 mm/min over 186 m^2) by doubling the number of in-rack sprinklers to two levels (25 percent of the way up the rack and 75 percent of the way up the rack) with the sprinklers at every other transverse flue and a maximum of 10 ft (3.0 m) apart, but with the in-rack sprinklers staggered so that every flue space is covered with one in-rack sprinkler. The fire can never go from the bottom tier of storage to the top without eventually encountering an in-rack sprinkler.

The third option, in the lower left portion of the figure, is a variation of the second option with the same ceiling discharge criteria of 0.30 gpm/ft^2 over 2000 ft^2 (12.2 mm/min over 186 m^2) and two levels of staggered in-rack sprinklers. The difference is that the lower level of in-rack sprinklers is at the 50 percent height of the rack instead of the 25 percent height tier.

The fourth option is to keep the ceiling sprinkler criteria at 0.30 gpm/ft^2 over 2000 ft^2 (12.2 mm/min over 186 m^2) and install one level of in-rack sprinklers 75 percent of the way up the rack, which results in the same number of in-rack sprinklers as the second and third options but keeps all the in-rack sprinklers at the same level.

EDUFIRE.IR

DESIGNER'S CORNER [25.2.3.4]

Can the protection criteria in Figure 25.9.3.1(a) through Figure 25.9.3.1(e) be used to protect exposed nonexpanded plastics?

No. The only protection criteria that can be used to protect exposed plastics are those that specifically state they are to be used for exposed plastics. Paragraph 25.2.3.4.1.1 specifically states that the protection criteria are for use only with plastics in cartons.

Prior to the 2013 edition, there was some confusion in NFPA 13 regarding this subject because the language in the plastics decision tree (Figure 20.4.8) seemed to imply that everything in Section 25.2.3.4 applied to exposed nonexpanded plastics. That, however, was not the case. The intent of the plastics decision tree is to allow only exposed nonexpanded plastics to be protected with criteria that are labeled for exposed nonexpanded plastics.

In the 2013 edition, the Technical Committee on Sprinkler System Discharge added criteria for protecting exposed nonexpanded plastics to Section 25.2.3.4.2. At the same time, the committee modified the plastics decision tree to clarify that only the protection criteria that specifically state they are for exposed plastics can be used with exposed plastics.

For the 2016 edition, the committee changed the plastics decision tree again to recognize that protection criteria for exposed expanded plastics are not available. With those new criteria, Chapter 25 now has protection information for all combinations of exposed, cartoned, expanded, and nonexpanded plastics, but the criteria in 25.2.3.4.1 and Figure 25.9.3.1(a) through Figure 25.9.3.1(e) cannot be used for any type of exposed plastic. Other portions of Chapter 25 must be used to protect exposed plastic (expanded or unexpanded).

25.2.3.4.1.2 Linear interpolation of design densities and areas of application shall be permitted between storage heights with the same clearance to ceiling.

NFPA 13 permits interpolation of protection criteria for different storage heights using the same clearance to the ceiling.

For example, a user who wants to protect storage 18 ft (5.5 m) high in a building 24 ft (7.3 m) high could interpolate between the requirements for storage 15 ft (4.6 m) high in a building 25 ft (7.6 m) high and storage 20 ft (6.1 m) high in a building 30 ft (9.1 m) high. Such interpolation would be calculated as follows:

1. Storage 18 ft (5.5 m) high in a building 24 ft (7.3 m) high results in an actual clearance of 6 ft (1.8 m).
2. Figure 25.9.3.1(a) provides criteria for storage 15 ft (4.6 m) high up to 10 ft (3.0 m) high, which includes 6 ft (1.8 m) clearance to the ceiling. The first interpolation point is then 0.3 gpm/ft^2 per 2000 ft^2 (12.2 mm/min per 186 m^2).
3. Figure 25.9.3.1(c) provides the criteria for storage 20 ft (6.1 m) high with 5 ft to 10 ft (1.5 m to 3.0 m) clearance. The second interpolation point is 0.45 gpm/ft^2 per 2000 ft^2 (18.3 mm/min per 186 m^2) for the option that includes the same in-rack sprinkler array as that chosen above. It is important to select the criteria for the same clearance. A common error is to select Figure 25.9.3.1(b) for storage 20 ft (6.1 m) high and a clearance of less than 5 ft (1.5 m) as the second point.
4. Interpolation between the density for the 15 ft and 20 ft (4.6 m and 6.1 m) storage heights determines the result for storage 18 ft (5.5 m) high as follows:
   - Density for storage 20 ft (6.1 m) high and 5 ft to 10 ft (1.5 m to 3.0 m) of clearance = 0.45 gpm/ft^2 (18.3 mm/min)
   - Density for storage 15 ft (4.6 m) high and 5 ft to 10 ft (1.5 m to 3.0 m) of clearance = 0.3 gpm/ft^2 (12.2 mm/min)
   - Difference between the densities = 0.15 gpm/ft^2 (6.1 mm/min)
   - Then divide 0.15 by 5 (difference in height of storage) = 0.03
   - Then multiply 0.03 by 3 (difference between height of first interpolation point and actual storage height) = 0.09
   - Then add 0.09 to 0.3 (density of first interpolation point) = 0.39

The result is that for storage 18 ft (5.5 m) high with 5 ft to 10 ft (1.5 m to 3.0 m) of clearance, the density required would be 0.39 gpm/ft^2 (15.9 mm/min).

EDUFIRE.IR

25.2.3.4.1.3 No interpolation between clearance to ceiling shall be permitted.

25.2.3.4.2 Exposed Nonexpanded Group A Plastic Commodities. Where in-rack sprinkler protection is installed to protect rack storage of exposed nonexpanded Group A plastic commodities, encapsulated or nonencapsulated, stored over 5 ft (1.5 m) and up to and including 25 ft (7.6 m) in height protected by CMDA sprinklers at ceiling level, the ceiling sprinkler design shall be in accordance with one of the following:

(1) Where in-rack sprinklers are installed in accordance with Figure 25.9.3.3(a) for storage up to 10 ft (3.0 m) high in a building up to 20 ft (6.1 m) high, the ceiling-level sprinkler design shall be a minimum 0.45 gpm/ft^2 (18.3 mm/min) density over a 2000 ft^2 (185 m^2) demand area.

(2) Where in-rack sprinklers are installed in accordance with Figure 25.9.3.3(b) for storage up to 10 ft (3.0 m) high in a building up to 20 ft (6.1 m) high, the ceiling-level sprinkler design shall be a minimum 0.30 gpm/ft^2 (12.2 mm/min) density over a 2000 ft^2 (185 m^2) demand area.

(3) Where in-rack sprinklers are installed in accordance with Figure 25.9.3.3(c) for storage up to 15 ft (4.6 m) high in a building up to 25 ft (7.6 m) high, the ceiling-level sprinkler design shall be a minimum 0.45 gpm/ft^2 (18.3 mm/min) density over a 2000 ft^2 (185 m^2) demand area.

(4) Where in-rack sprinklers are installed in accordance with Figure 25.9.3.3(d) for storage up to 15 ft (4.6 m) high in a building up to 25 ft (7.6 m) high, the ceiling-level sprinkler design shall be a minimum 0.30 gpm/ft^2 (12.2 mm/min) density over a 2000 ft^2 (185 m^2) demand area.

(5) Where in-rack sprinklers are installed in accordance with Figure 25.9.3.3(e) for storage up to 20 ft (6.1 m) high in a building up to 25 ft (7.6 m) high, the ceiling-level sprinkler design shall be a minimum 0.6 gpm/ft^2 (24.5 mm/min) density over a 2000 ft^2 (185 m^2) demand area.

(6) Where in-rack sprinklers are installed in accordance with Figure 25.9.3.3(f) for storage up to 20 ft (6.1 m) high in a building up to 25 ft (7.6 m) high, the ceiling-level sprinkler design shall be a minimum 0.45 gpm/ft^2 (18.3 mm/min) density over a 2000 ft^2 (185 m^2) demand area.

(7) Where in-rack sprinklers are installed in accordance with Figure 25.9.3.3(g) for storage up to 20 ft (6.1 m) high in a building up to 30 ft (9.1 m) high, the ceiling-level sprinkler design shall be a minimum 0.8 gpm/ft^2 (32.6 mm/min) density over a 1500 ft^2 (140 m^2) demand area.

(8) Where in-rack sprinklers are installed in accordance with Figure 25.9.3.3(h) for storage up to 20 ft (6.1 m) high in a building up to 30 ft (9.1 m) high, the ceiling-level sprinkler design shall be a minimum 0.6 gpm/ft^2 (24.5 mm/min) density over a 1500 ft^2 (140 m^2) demand area.

(9) Where in-rack sprinklers are installed in accordance with Figure 25.9.3.3(i) for storage up to 20 ft (6.1 m) high in a building up to 30 ft (9.1 m) high, the ceiling-level sprinkler design shall be a minimum 0.30 gpm/ft^2 (12.2 mm/min) density over a 2000 ft^2 (185 m^2) demand area.

(10) Where in-rack sprinklers are installed in accordance with Figure 25.9.3.3(j) for storage up to 25 ft (7.6 m) high in a building up to 35 ft (11 m) high, the ceiling-level sprinkler design shall be a minimum 0.8 gpm/ft^2 (32.6 mm/min) density over a 1500 ft^2 (140 m^2) demand area.

(11) Where in-rack sprinklers are installed in accordance with Figure 25.9.3.3(k) for storage up to 25 ft (7.6 m) high in a building up to 35 ft (11 m) high, the ceiling-level sprinkler design shall be a minimum 0.30 gpm/ft^2 (12.2 mm/min) density over a 2000 ft^2 (185 m^2) demand area.

EDUFIRE.IR

The requirements in 25.2.3.4.2 and the corresponding figures [Figure 25.9.3.3(a) through Figure 25.9.3.3(k)] were added to the 2013 edition to provide specific guidance on the protection of exposed nonexpanded plastics stored in open racks to a maximum height of 25 ft (7.6 m). The figures are used in a very similar manner as the figures for cartoned plastic [see Figure 25.9.3.1(a) through Figure 25.9.3.1(e)]. Referring to the figure that represents the correct combination of storage type/height and ceiling height, the user selects a protection scenario from the options available in the figure.

Each figure shows a plan view and an elevation view of two variations of a single-row rack and a double-row rack and two variations of multiple-row racks. The plan view shows the horizontal spacing of in-rack sprinklers in each type of rack configuration. The elevation view shows the vertical spacing of in-rack sprinklers for each rack configuration. With each storage cube measuring 4 ft to 5 ft (1.2 m to 1.5 m) represented in each dimension, the maximum spacing between in-rack sprinklers, both horizontally and vertically, can be determined by the number of storage cubes between the illustrated in-rack sprinkler positions. It is important to note that the location of the in-rack sprinklers with respect to the available flue spaces must also meet the provisions of 25.5.1.2, 25.5.1.3, and 25.5.1.4.

It should be noted that no specific guidance is provided relative to the allowance or prohibition of interpolation between storage heights using these figures.

25.2.3.5* Rack Storage of Group A Plastic Commodities Stored Over 25 ft (7.6 m) in Height. Where rack storage of Group A plastic commodities, encapsulated or nonencapsulated, over 25 ft (7.6 m) in height are protected by in-rack sprinklers in accordance with 25.9.4, ceiling-level sprinkler designs, in terms of density [gpm/ft^2 (mm/min)] and area of operation [ft^2 (m^2)], shall be selected from Table 25.2.3.5 based on the storage height of commodity above the top level of in-rack sprinklers.

TABLE 25.2.3.5 *CMDA Ceiling-Level Sprinkler Design Criteria for Rack Storage of Group A Plastic Commodities with Storage Over 25 ft (7.6 m) in Height, Clearance to Ceiling Up to and Including 10 ft (3.0 m) Supplemented with In-Rack Sprinklers*

Storage Height Above Top Level of In-Rack Sprinklers		***Ceiling-Level Sprinkler Design Criteria***	
ft	***m***	***gpm/ft^2 over ft^2***	***mm/min over m^2***
Up to and including 5 ft	Up to and including 1.5 m	0.30/2000	12.2/185 m^2
Over 5 ft and up to and including 10 ft	Over 1.5 m and up to and including 3.0 m	0.45/2000	18.3/185 m^2

The required discharge density at the ceiling for CMDA designs over 25 ft (7.6 m) is fixed as provided in Table 25.2.3.5. This density is based on the storage height above the top level of in-rack sprinklers, with the in-rack sprinklers providing primary fire control within the rack structure from the height of the installed in-rack sprinklers down. The ceiling sprinklers protect the storage above and provide cooling for the structure.

A.25.2.3.5 In this application ordinary-, intermediate-, or high-temperature ceiling-level sprinklers can be used. There are no data to support temperature rating restrictions for this section.

25.2.3.6 Rack Storage of Rubber Tires Stored Over 12 ft (3.7 m) in Height.

Paragraph 25.2.3.6 covers requirements for the protection of rubber tires stored in open racks and protected by in-rack sprinklers. When protecting rubber tire storage in accordance with this paragraph, the user should first review Chapter 20 for the general design criteria that apply and then review this 25.2.3.6 for the specific rules for the storage situation.

Rubber tire storage that is covered in the definition for *miscellaneous tire storage* in 3.3.124 can be protected in accordance with the criteria provided in 25.2.2.1 in lieu of those provided by Chapter 20 and 25.2.3.6. See the commentary to 25.2.3.6.2 for additional information on miscellaneous tire storage.

EDUFIRE.IR

25.2.3.6.1 General. The requirements of Chapter 20 shall apply unless modified in this section.

The rules of Chapter 20 apply to all storage occupancies (excluding miscellaneous storage), including those covered in 25.2.3.6. Use of the rules from Chapter 20 in conjunction with the rules of 25.2.3.6 is critical to the development of a correct and efficient fire sprinkler system design. The provisions of Chapter 20 contain both allowances and restrictions that can affect the system design and that must be considered where applicable. For example, 25.2.3.1.5 requires the use of K-11.2 (K-160) or larger sprinklers for any situation where the density demand exceeds 0.34 gpm/ft^2 (13.9 mm/min). This requirement is important in applying the rules of 25.2.3.4.1.1, which require ceiling sprinklers to discharge greater than 0.34 gpm/ft^2 (13.9 mm/min) in some circumstances and less than 0.34 gpm/ft^2 in others. As another example, 20.6.1 would limit the design from Chapter 25 to ceiling slopes not exceeding 2 in 12 (16.7 percent), thereby restricting the applicability of the design criteria contained therein.

To protect any rubber tire storage configuration, sprinklers might be needed only at the ceiling, or sprinklers might be needed at the ceiling as well as in the racks. Chapter 25 addresses the design and installation requirements for installation of in-rack sprinklers within the racks. In some situations, sprinklers will not be required in the racks. However, the provision of in-rack sprinklers does provide a more efficient and higher level of protection of the space, which some building owners or insurance authorities might request. As with any in-rack sprinkler installation, the designer needs to gain an understanding of the facility's material handling processes so that the in-rack sprinklers can be installed in such a manner to help protect against potential damage to the sprinklers as materials are moved in and out of the racks.

Rubber tires represent a difficult challenge. Rubber burns with significant heat release, and because the tires are exposed and generally stored close together, the fire easily moves from tire to tire. The shape of the tires shields the fire from the sprinkler's discharge and makes it difficult for water to penetrate the burning materials. Also, the tires have a great deal of surface area, which makes them easy to pyrolyze and support combustion. Putting all this together, rubber tires represent such a unique and difficult challenge for sprinklers that they deserve their own section in NFPA 13. Exhibits 3.18, 3.19, 3.22, and 3.23 show examples of typical rubber tire storage arrangements.

25.2.3.6.2 Ceiling Systems. Where rack storage of rubber tires on pallets, either on-side or on-tread, over 5 ft (1.5 m) and up to and including 20 ft (6.1 m) in height protected by CMDA sprinklers at ceiling level with a maximum clearance to ceiling of 10 ft (3.0 m) along with one level of in-rack sprinklers, the ceiling-level sprinkler system design density and area of application shall be a minimum 0.40 gpm/ft^2 (16.3 mm/min) density over a 3000 ft^2 (280 m^2) demand area. *(See A.21.6.)*

Before deciding to use the protection criteria in 25.2.3.6.2, the user must determine whether the storage can be considered miscellaneous tire storage. The definition of *miscellaneous tire storage* in 3.3.124 differentiates it from other types of miscellaneous storage. If the rubber tire storage meets the definition of *miscellaneous tire storage*, the user should follow the portions of 25.2.2.1 that apply to open rack storage of rubber tires protected by ceiling and in-rack sprinklers with allowable modifications from Chapter 19 rather than any portion of Chapter 20 and this section.

25.2.3.6.3 Reduced-Discharge Density. Where high-expansion foam systems are installed in accordance with NFPA 11 to protect rack storage of rubber tires, either on-side or on-tread, over 5 ft (1.5 m) and up to and including 20 ft (6.1 m) in height protected by CMDA sprinklers at ceiling level with a maximum clearance to ceiling of 10 ft (3.0 m) and one level of in-rack sprinklers, the ceiling-level sprinkler system design density shall be permitted to be reduced from 0.40 gpm/ft^2 (16.3 mm/min) to 0.24 gpm/ft^2 (9.8 mm/min).

The provisions of 25.2.3.6.3 apply only to CMDA ceiling sprinkler protection in combination with in-rack sprinklers that is not otherwise required to have high-expansion foam. In these cases, the addition of high-expansion foam reduces the discharge necessary from the ceiling sprinklers to protect exposed steel and structural members. While this protection is not usually cost-effective for a new building, it might help a building owner with an existing system add rubber tire storage to the building without the need to make serious changes to the overhead sprinkler system.

EDUFIRE.IR

The density can be reduced using 25.2.3.6.3, but it cannot be reduced below 0.24 gpm/ft² (9.8 mm/min). If the density is reduced, the area must remain the same, based on the temperature rating of the sprinklers at the ceiling.

25.2.3.6.4 Water Supplies. Total water supplies shall be capable of providing flow for automatic sprinklers, hose streams, and foam systems (if provided) for the duration required in Table 20.12.2.6.

The hose stream and duration demands shown in Table 20.12.2.6 for protecting rubber tires are much higher than those for Class I through Class IV commodities or Group A plastics due to the difficult nature of controlling fires involving rubber tires.

25.2.4 CMSA Ceiling-Level Sprinkler Design Criteria in Combination with In-Rack Sprinklers.

The discharge criteria for CMSA sprinklers — the minimum pressure and the required number of sprinklers for the design area — are provided in Table 25.2.4.2.1 and Table 25.2.4.3.1. To calculate the minimum flow (*Q*) from the sprinkler, the user must multiply the K-factor (*K*) for the sprinkler by the square root of the minimum pressure (*P*), as shown in the following equation:

$$Q = K\sqrt{P}$$

To be effective, CMSA sprinklers must be installed in accordance with the CMSA-specific requirements of Chapter 13.

CMSA sprinklers evolved from the large drop sprinklers invented by the Viking Corporation in the mid-1980s. Rather than relying on the density/area concept to control or suppress fires, CMSA sprinklers rely on the discharge of water at a certain pressure to improve the momentum, size, and quality of the water droplets.

25.2.4.1 General.

25.2.4.1.1 Open Wood Joist Construction with CMSA Sprinklers at Ceiling Level.

The requirement in 13.2.7.1.2(2) allows CMSA sprinklers to be installed under wood joist construction with the sprinklers 1 in. to 6 in. (25 mm to 150 mm) below the bottom of the joists, provided the sprinkler deflector is not more than 22 in. (550 mm) below the deck. However, the user must understand the implications of this decision. Where CMSA sprinklers are installed below wood joists, the user needs to provide either a specific minimum pressure at the sprinkler in accordance with 25.2.4.1.1.1 or firestopping across the channels of the joists (to the full depth of the joist) at 20 ft (6.1 m) intervals in accordance with 25.2.4.1.1.2.

The provisions of 25.2.4.1.1 would allow the use of the K-11.2 (K-160) CMSA sprinkler only at 50 psi (3.4 bar) and the K-16.8 (K-240) CMSA sprinkler only at 22 psi (1.5 bar) beneath open wood joist construction. At this time, these are the only two CMSA sprinklers in NFPA 13 that have ceiling sprinkler protection options in combination with in-rack sprinklers.

25.2.4.1.1.1 Where CMSA sprinklers are installed under open wood joist construction, firestopping in accordance with 25.2.4.1.1.2 shall be provided or the minimum operating pressure of the sprinklers shall be 50 psi (3.4 bar) for a K-11.2 (160) sprinkler or 22 psi (1.5 bar) for a K-16.8 (240) sprinkler.

25.2.4.1.1.2 Where each joist channel of open wood joist construction is fully firestopped to its full depth at intervals not exceeding 20 ft (6.1 m), the lower pressures specified in Table 25.2.4.2.1 shall be permitted to be used.

25.2.4.1.2 Preaction Systems for CMSA Sprinklers. For the purpose of using Table 25.2.4.2.1, preaction systems shall be classified as dry pipe systems.

Table 25.2.4.2.1 contains design criteria for both wet pipe systems and dry pipe systems involving CMSA ceiling sprinklers in combination with in-rack sprinklers; Table 25.2.4.3.1 contains design criteria only for

EDUFIRE.IR

wet pipe systems. Preaction systems are allowed to be installed with CMSA sprinklers; however, where a preaction system is installed, it must comply with the discharge criteria for dry pipe systems. As a result, a preaction sprinkler system can be used only with the dry pipe sprinkler designs indicated in Table 25.2.4.2.1. It should be noted that this requirement does not make a preaction system a dry pipe system from the design and installation perspective. The requirement simply provides a mechanism to establish the design discharge criteria for a preaction system used with CMSA sprinklers. The installation requirements of Section 8.3, not the requirements of Section 8.2, apply to such preaction systems.

25.2.4.2 Rack Storage of Class I Through Class IV Commodities.

25.2.4.2.1 Where rack storage of Class I through Class IV commodities is protected by CMSA sprinklers at ceiling level along with one level of in-rack sprinklers, the ceiling-level sprinkler design criteria shall be in accordance with Table 25.2.4.2.1.

CMSA sprinklers using the discharge criteria of Table 25.2.4.2.1 are based on open rack arrangements. For installations that include solid shelving, see the requirements of Section 25.6.

The design criteria in Table 25.2.4.2.1 must be selected based on the variables in the first six main columns of the table: storage arrangement, commodity class, maximum storage height, maximum ceiling/roof height, K-factor/orientation, and type of system. Once the configuration and the commodity have been identified, the user then selects the maximum storage height, which would include the proposed storage height for the facility, and checks to see if the proposed ceiling/roof deck height is within the allowable maximum permitted for that selection. If it is not, a higher ceiling/roof height selection must be made that is within the maximum allowed. The available sprinkler options can then be identified. It should be noted that not all the options include criteria for both wet and dry systems and that some selections include two design options for wet systems.

TABLE 25.2.4.2.1 *CMSA Ceiling-Level Sprinkler Design Criteria for Rack Storage of Class I Through Class IV Commodities (Encapsulated and Nonencapsulated) Supplemented with In-Rack Sprinklers*

Storage Arrangement	*Commodity Class*	*Maximum Storage Height*		*Maximum Ceiling/ Roof Height*		*K-Factor/ Orientation*	*Type of System*	*No. of Ceiling Sprinklers in the Design*	*No. of Required Levels of In-Rack Sprinklers*	*Minimum Ceiling Sprinkler Operating Pressure*	
		ft	*m*	*ft*	*m*					*psi*	*bar*
Single-, double-, and multiple-row racks (no open-top containers)	I or II	30	9.1	35	11	11.2 (160) Upright	Wet	20	One level	25	1.7
							Dry	30	One level	25	1.7
						16.8 (240) Upright	Wet	20	One level	15	1
							Dry	30	One level	15	1
	III	25	7.6	30	9.1	11.2 (160) Upright	Wet	15	One level	25	1.7
							Dry	25	One level	25	1.7
						16.8 (240) Upright	Dry	25	One level	15	1
				35	11	11.2 (160) Upright	Wet	15	One level	25	1.7
							Dry	25	One level	25	1.7
						16.8 (240) Upright	Wet	15	One level	15	1
							Dry	25	One level	15	1
	IV	25	7.6	30	9.1	11.2 (160) Upright	Wet	15	One level	50	3.4
				35	11	11.2 (160) Upright	Wet	20	One level	50	3.4
								15	One level	75	5.2
						16.8 (240) Upright	Wet	20	One level	22	1.5
								15	One level	35	2.4

EDUFIRE.IR

25.2.4.2.2 Protection shall be provided as specified in Table 25.2.4.2.1 or appropriate NFPA standards in terms of minimum operating pressure and the number of ceiling-level sprinklers to be included in the design area.

The number of sprinklers in the design area is provided in Table 25.2.4.2.1; however, the table does not provide the arrangement (number of sprinklers to calculate on a branch line) for the design area. For that information, the user should go to 27.2.4.2.1 and calculate a design area by multiplying the number of sprinklers from Table 25.2.4.2.1 by the maximum allowable area of coverage per sprinkler from Table 13.2.5.2.1. The number of sprinklers on the branch line is calculated by multiplying the square root of the calculated design area by 1.2.

For example, consider rack storage of Class IV commodities stored 25 ft (7.6 m) high in a 30 ft (9.1 m) high building (with noncombustible unobstructed ceiling construction) that is protected with a wet pipe sprinkler system using upright K-11.2 (K-160) CMSA sprinklers. Table 25.2.4.2.1 would require 15 sprinklers in the design area, and Table 13.2.5.2.1 would allow 100 ft^2 (9.3 m^2) per sprinkler. Multiplying those two numbers gives the user an effective design area of 1500 ft^2 (139 m^2).

Per the requirement in 27.2.4.2.1, the user multiplies the square root of the effective design area by 1.2 to get the distance of the design area parallel to the branch line. In this case, that would be 46.5 ft (14.2 m). If the sprinklers were installed with 10 ft (3.0 m) between each sprinkler on the branch line, it would take five sprinklers to cover 46.5 ft (14.2 m). Therefore, five sprinklers would be needed on the most remote branch line, five sprinklers would be needed on the second most remote branch line, and five sprinklers would be needed on the third most remote branch line to make up the 15-sprinkler design area required by Table 25.2.4.2.1.

25.2.4.3 Rack Storage of Group A Plastic Commodities.

25.2.4.3.1 Where rack storage of nonexpanded, cartoned and exposed, Group A plastic commodities is protected by CMSA sprinklers at ceiling level along with one level of in-rack sprinklers, the ceiling-level sprinkler system design criteria shall be in accordance with Table 25.2.4.3.1.

CMSA sprinklers using the discharge criteria of Table 25.2.4.3.1 are based on open rack arrangements. For installations that include solid shelving, see the requirements of Section 25.6.

TABLE 25.2.4.3.1 *CMSA Ceiling-Level Sprinkler Design Criteria for Rack Storage of Group A Plastic Commodities Stored Up to and Including 25 ft (7.6 m) in Height Supplemented with In-Rack Sprinklers*

Storage Arrangement	*Commodity Class*	*Maximum Storage Height*		*Maximum Ceiling/ Roof Height*		*K-Factor/ Orientation*	*Type of System*	*No. of Ceiling Sprinklers in the Design*	*No. of Required Levels of In-Rack Sprinklers*	*Minimum Ceiling Sprinkler Operating Pressure*	
		ft	*m*	*ft*	*m*					*psi*	*bar*
Single-, double-, and multiple-row racks (no open-top containers)	Cartoned nonexpanded plastics and exposed nonexpanded plastics	25	7.6	30	9.1	11.2 (160) upright	Wet	15	One level	50	3.4
				35	11	11.2 (160) upright	Wet	30	One level	50	3.4
							Wet	20	One level	75	5.2
						16.8 (240) upright	Wet	30	One level	22	1.5
							Wet	20	One level	35	2.4

25.2.4.3.2 Protection shall be provided as specified in Table 25.2.4.3.1 or appropriate NFPA standards in terms of minimum operating pressure and the number of ceiling-level sprinklers to be included in the design area.

The number of sprinklers in the design area is provided in Table 25.2.4.3.1. The table, however, does not provide the arrangement (number of sprinklers to calculate on a branch line) for the design area. For that information, the user should go to 27.2.4.2.1 and calculate a design area by multiplying the number

EDUFIRE.IR

of sprinklers from Table 25.2.4.3.1 by the maximum allowable area of coverage per sprinkler from Table 13.2.5.2.1. The number of sprinklers on the branch line is calculated by multiplying the square root of the calculated design area by 1.2.

For example, consider rack storage of cartoned nonexpanded Group A plastic commodities stored 25 ft (7.6 m) high in a 30 ft (9.1 m) high building (with noncombustible unobstructed ceiling construction) that is protected with a wet pipe sprinkler system using upright K-11.2 (K-160) CMSA sprinklers. Table 25.2.4.3.1 would require 15 sprinklers in the design area, and Table 13.2.5.2.1 would allow 100 ft^2 (9.3 m^2) per sprinkler. Multiplying those two numbers gives the user an effective design area of 1500 ft^2 (139 m^2).

Per the requirement in 27.2.4.2.1, the user multiplies the square root of the effective design area by 1.2 to get the distance of the design area parallel to the branch line. In this case, that would be 46.5 ft (14.2 m). If the sprinklers were installed with 10 ft (3.0 m) between each sprinkler on the branch line, it would take five sprinklers to cover 46.5 ft (14.2 m). Therefore, five sprinklers would be needed on the most remote branch line, five sprinklers would be needed on the second most remote branch line, and five sprinklers would be needed on the third most remote branch line to make up the 15-sprinkler design area required by Table 25.2.4.3.1.

25.2.5 ESFR Ceiling-Level Sprinkler Design Criteria in Combination with In-Rack Sprinklers.

Early suppression fast-response (ESFR) sprinklers are designed to provide fire suppression, rather than fire control, for a wide range of combustibles. To be effective, ESFR sprinklers must be installed in accordance with the ESFR-specific requirements in Chapter 14, with special attention given to avoidance of objects that could obstruct sprinkler spray patterns.

The discharge criteria for ESFR sprinklers — the minimum pressure and the required number of sprinklers for the design area — are provided in Table 25.2.5.1.1. To calculate the minimum flow (Q) from the sprinkler, the user must multiply the K-factor for the sprinkler (K) by the square root of the minimum pressure (P), as shown in the following equation:

$$Q = K\sqrt{P}$$

25.2.5.1 Rack Storage of Class I Through Class IV and Group A Plastic Commodities.

25.2.5.1.1 Where rack storage of Class I through Class IV and Group A plastic commodities is protected by ESFR sprinklers at ceiling level along with one level of in-rack sprinklers, the ceiling-level sprinkler design criteria shall be in accordance with Table 25.2.5.1.1.

ESFR sprinklers using the discharge criteria of Table 25.2.5.1.1 are based on open rack arrangements. For installations that include solid shelving, see the requirements of Section 25.6.

TABLE 25.2.5.1.1 *ESFR Ceiling-Level Sprinkler Design Criteria for Rack Storage of Class I Through Class IV and Group A Plastic Commodities (Encapsulated and Nonencapsulated) Supplemented with In-Rack Sprinklers*

Storage Arrangement	*Commodity Class*	*Maximum Storage Height*		*Maximum Ceiling/ Roof Height*		*K-Factor*	*Orientation*	*No. of Ceiling Sprinklers in the Design*	*No. of Required Levels of In-Rack Sprinklers*	*Minimum Ceiling Sprinkler Operating Pressure*	
		ft	*m*	*ft*	*m*					*psi*	*bar*
Single-, double-, and multiple-row racks (no open-top containers)	Class I, II, III or IV, encapsulated or nonencapsulated, cartoned nonexpanded and exposed nonexpanded plastics	25	7.6	45	14	14.0 (200)	Pendent	12	One level	90	6.2
						16.8 (240)	Pendent	12	One level	63	4.3

EDUFIRE.IR

25.2.5.1.2 ESFR sprinkler systems, when supplemented with in-rack sprinklers, shall be designed such that the minimum operating pressure is not less than that indicated in Table 25.2.5.1.1 for type of storage, commodity, storage height, and building height involved.

25.2.5.1.3 The design area applicable to the ceiling-level design options listed in Table 25.2.5.1.1 shall consist of the most hydraulically demanding area of 12 sprinklers, consisting of 4 sprinklers on each of three branch lines.

NFPA 13 used to require that an additional two sprinklers be added to the 12-sprinkler design to make a 14-sprinkler design when additional ESFR sprinklers had to be added under obstructions. Starting with the 2013 edition, this rule was dropped because the Technical Committee on Sprinkler System Discharge reviewed the 20-year history of ESFR sprinklers in actual fire situations and found the 12-sprinkler design to be adequate, even where additional sprinklers were located beneath obstructions.

25.3 In-Rack Sprinkler Characteristics.

25.3.1 In-rack sprinklers shall be pendent or upright, standard- or quick-response, ordinary-temperature-rated and have a nominal K-factor of K-5.6 (80), K-8.0 (115), or K-11.2 (160).

Theoretically, the use of quick-response in-rack sprinklers can speed up sprinkler operation, resulting in the application of water to a smaller fire, thereby improving sprinkler performance. However, at this time limited test data have been submitted that would allow The Technical Committee on Sprinkler System Discharge to determine the potential difference in performance between standard-response and quick-response in-rack sprinklers. Where quick-response sprinklers are required, it is because the testing that resulted in the indicated design was performed with quick-response in-rack sprinklers. As a result, there are currently no differences in generic in-rack sprinkler design requirements between quick-response in-rack sprinklers and standard-response in-rack sprinklers. The same can be said about pendent and upright in-rack sprinklers. Most in-rack sprinkler designs use K-5.6 (K-80) or K-8.0 (K-115) orifice sprinklers. K-11.2 (K-160) in-rack sprinklers have been listed, are permitted, and might be required in some designs.

25.3.2 In-rack sprinklers protecting open rack storage where ESFR sprinklers are installed at ceiling level shall be quick-response, ordinary-temperature-rated, and either K-8.0 (115) or K-11.2 (160).

There are times when in-rack sprinklers are required to be quick-response. These circumstances include when the ceiling sprinklers are ESFR or when in-rack sprinkler protection is provided in accordance with Section 25.8. In other circumstances, the in-rack sprinklers can be either quick-response or standard-response. But where ESFR sprinklers are at the ceiling, the in-rack sprinklers should have sensitivity comparable to that of the ESFR sprinklers so that the in-rack sprinklers can activate as quickly as possible, thus helping to minimize the number of ESFR sprinklers that operate.

25.3.3 In-rack sprinklers with intermediate- and high-temperature ratings shall be used near heat sources as required by 9.4.2.

25.3.4 In-rack sprinklers shall be permitted to have a different RTI rating from the ceiling sprinklers under which they are installed.

The requirements of 25.3.4 allow for the installation of quick-response in-rack sprinklers where sprinklers at ceiling level are standard-response. Note that 25.3.4 does not allow for the installation of standard-response in-rack sprinklers where sprinklers at ceiling level are quick-response — there are specific rules that require quick-response in-rack sprinklers (e.g., ESFR sprinklers at ceiling level).

25.3.5 In-Rack Sprinkler Water Shields.

Where more than one level of in-rack sprinklers exists, and horizontal barriers are not installed, water shields over the lower level in-rack sprinklers are required to minimize the likelihood that discharge from

EDUFIRE.IR

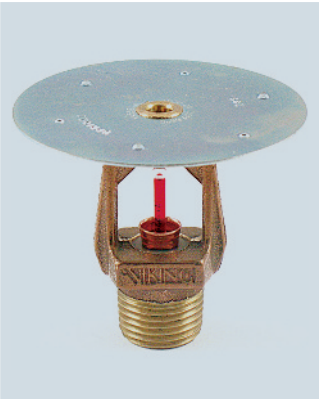

EXHIBIT 25.5 In-Rack Sprinkler Equipped with Listed Water Shield. (Courtesy of Viking®)

upper level in-rack sprinklers will cold solder the lower level in-rack sprinklers. As an exception to water shields, listed intermediate level/rack storage sprinklers are permitted. Exhibit 25.5 shows in-rack sprinklers that are equipped with a water shield.

25.3.5.1 In-Rack Sprinkler Water Shields for Storage of Class I Through Class IV Commodities. Water shields shall be provided directly above in-rack sprinklers, or listed intermediate level/rack storage sprinklers shall be used where there is more than one level, if not shielded by horizontal barriers. *(See Section C.3.)*

C.3 [25.3.5.1] Tests 71, 73, 81, 83, 91, 92, 95, and 100 in the 20 ft (6.1 m) high array involving a single level of in-rack sprinklers were conducted without heat or water shields. Results were satisfactory.

Test 115 was conducted with two levels of sprinklers in racks with shields. Test 116, identical to Test 115 but without water shields, produced a lack of control. Visual observation of lower level in-rack sprinklers that did not operate although they were in the fire area indicated a need for water shields.

Tests 115 and 116 were conducted to investigate the necessity for water shields where multiple levels of in-rack sprinklers are installed. Where water shields were not installed in Test 116, the fire jumped the aisle, and approximately 76 boxes were damaged. In Test 115 with water shields, the fire did not jump the aisle, and only 32 boxes were damaged. Water shields are, therefore, suggested wherever multiple levels of in-rack sprinklers are installed, except for installations with horizontal barriers or shelves that serve as water shields.

25.3.5.2 In-Rack Sprinkler Water Shields for Group A Plastic Storage. Where in-rack sprinklers are not shielded by horizontal barriers, water shields shall be provided above the sprinklers, or listed intermediate level/rack storage sprinklers shall be used.

25.4 Vertical Spacing and Location of In-Rack Sprinklers.

25.4.1 In-rack sprinklers shall not be required to meet the obstruction criteria and clearance from storage requirements of Section 9.5.

The guidelines in Section 9.5 are for ceiling-level sprinklers with the intent of ensuring an acceptable level of water delivery from the ceiling sprinkler to the top of storage during a fire event. Since in-rack sprinklers are installed within the rack below the very top of storage, they are not prone to the same obstruction issues that ceiling sprinklers are, and thus their own set of obstruction guidelines are provided in Chapter 25.

25.4.2 A minimum 6 in. (150 mm) vertical clear space shall be maintained between in-rack sprinkler deflectors and the top of storage located below them.

For all rack storage arrangements, except for single- and double-row racks of Class I through Class IV commodities up to and including 20 ft (6.1 m) in height (see 25.4.2.1), in-rack sprinklers are required to be installed with a clear space of at least 6 in. (150 mm) between the sprinkler deflector and the top of stored load. Positioning the in-rack sprinkler in this manner increases the amount of discharged water from the in-rack sprinkler to reach the top of adjacent storage for the given allowable horizontal distances the in-rack sprinkler can be installed within flue spaces. Most full-scale fire tests with in-rack sprinklers have been conducted with a 6 in. (150 mm) wide flue space (longitudinal and transverse). As the flue space width in which the in-rack sprinkler is installed increases, the farther away horizontally the top of the pallet load becomes from the in-rack sprinkler and the more likely it is that water discharge will hit the side of the pallet load instead of the top of it. As a result, consideration should be given to try to maximum the vertical clear space of the in-rack sprinkler, where possible, to help maximize the amount of water discharge that can reach the top of each pallet load within the rack storage array.

25.4.2.1* Where in-rack sprinklers are being installed within single- and double-row racks of Class I through Class IV commodities up to and including 20 ft (6.1 m) in height, the vertical

EDUFIRE.IR

clear space of in-rack sprinkler deflectors with respect to the top of storage located below them shall be permitted to be less than 6 in. (150 mm). *(See Section C.16.)*

A.25.4.2.1 Where possible, it is recommended that in-rack sprinkler deflectors be located at least 6 in. (150 mm) vertically above the top of storage located below them.

While it is not mandatory that the vertical position of in-rack sprinklers in single- or double-row racks without solid shelves not exceeding 20 ft (6.1 m) in height be optimum for water distribution, it is recommended that the installation position for the in-rack sprinkler discharge be above the top of the storage and below the horizontal rack beam above.

C.16 [25.4.2.1] In one 20 ft (6.1 m) high test, sprinklers were buried in the flue space 1 ft (300 mm) above the bottom of the pallet load, and results were satisfactory. Coverage of aisles by in-rack sprinklers is, therefore, not necessary, and distribution across the tops of pallet loads at any level is not necessary for the occupancy classes tested.

25.4.3 In-rack sprinkler discharge shall not be obstructed by horizontal rack members.

For optimum water distribution, the vertical position of the in-rack sprinkler must be positioned below the rack beam. Positioning the in-rack sprinkler in this manner allows the in-rack sprinkler discharge to pass under the beam and reach the top of the storage load. It can be difficult to comply with this rule and still protect the sprinkler from damage as loads are moved in and out of the rack. However, careful placement of the sprinkler and use of load-stops can help ensure that the load is not pushed too far.

25.4.4* Where one level of in-rack sprinklers are required by the guidelines of this chapter and the vertical location of the in-rack sprinklers is not indicated in an applicable figure, in-rack sprinklers shall be installed at the first tier level at or above one-half of the highest expected storage height.

In calculating coverage for situations where there is only one level of in-rack sprinklers, the user should figure on approximately half the height of storage below the in-rack sprinkler and half the height of storage above the in-rack sprinkler.

See Exhibit 25.6 for an illustration of sprinkler placement for rack storage of a single level of in-rack sprinklers where the storage height is 20 ft (6.1 m).

A.25.4.4 Where one level of in-rack sprinklers are required by the guidelines in Chapter 25, in-rack sprinklers for multiple-row rack storage up to and including 25 ft (7.6 m) of Class I through Class IV commodities should be installed at the first tier level nearest one-half to two-thirds of the highest expected storage height.

25.4.5 Where two levels of in-rack sprinklers are required by the guidelines of this chapter and the vertical location of the in-rack sprinklers is not indicated in an applicable figure, in-rack sprinklers shall be installed at the first tier level at or above one-third and two-thirds of the highest expected storage height.

In calculating coverage for situations where there are two levels of in-rack sprinklers, the user should figure on approximately one-third the height of the storage below the lower level of in-rack sprinklers and two-thirds the height of storage below the upper level of in-rack sprinklers.

See Exhibit 25.7 for an illustration of sprinkler placement for rack storage for two levels of in-rack sprinklers where the storage height is 25 ft (7.6 m).

25.4.6 Maximum Storage Height Above Top In-Rack Sprinkler Level.

25.4.6.1 Where in-rack sprinklers are required for single- and double-row rack storage of Class I through Class IV commodities over 25 ft (7.6 m) in height and protected by CMDA sprinklers at ceiling level, storage above the top level of in-rack sprinklers shall not exceed 10 ft (3.0 m).

EDUFIRE.IR

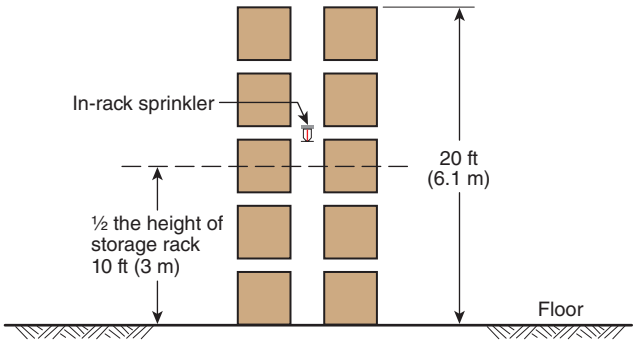

EXHIBIT 25.6 Positioning of One Level of In-Rack Sprinklers for Situations Where Half of the Storage Height Is in the Middle of a Tier of Storage.

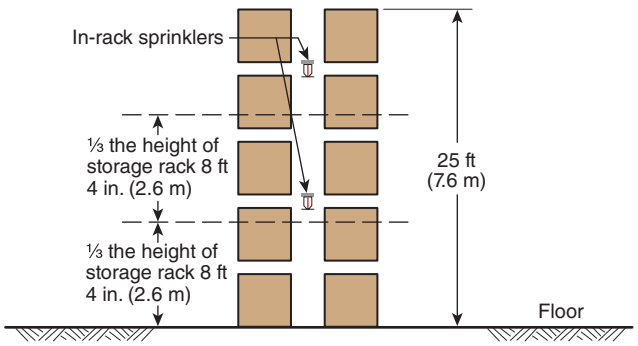

EXHIBIT 25.7 Positioning of Two Levels of In-Rack Sprinklers.

25.4.6.2 Where in-rack sprinklers are required for multiple-row rack storage of Class I through Class IV commodities over 25 ft (7.6 m) in height and protected by CMDA sprinklers at ceiling level, storage above the top level of in-rack sprinklers shall not exceed 10 ft (3.0 m) for Class I, Class II, or Class III commodities or 5 ft (1.5 m) for Class IV commodities.

25.4.6.3 Where in-rack sprinklers are required for rack storage of Group A plastic commodities over 25 ft (7.6 m) in height and protected by CMDA sprinklers at ceiling level, storage above the top level of in-rack sprinklers shall not exceed 10 ft (3.0 m).

25.4.7 Staggering of In-Rack Sprinklers for Class I Through Class IV Commodities Over 25 ft (7.6 m) in Height.

25.4.7.1 Where single-, double-, and multiple-row rack storage of Class I through Class IV commodities is over 25 ft (7.6 m) in height and protected by CMDA sprinklers at ceiling level, in-rack sprinklers shall be staggered vertically where installed in accordance with Table 25.9.2.1.1, Figure 25.9.2.2.1(a) through Figure 25.9.2.2.1(j), and Figure 25.9.2.1.1(a) through Figure 25.9.2.1.1(e).

25.5 Horizontal Location and Spacing of In-Rack Sprinklers.

25.5.1 Horizontal Location of In-Rack Sprinklers.

25.5.1.1 In-rack sprinklers shall not be required to meet the obstruction criteria and clearance from storage requirements of Section 9.5.

The guidelines in Section 9.5 are for ceiling-level sprinklers with the intent of ensuring an acceptable level of water delivery from the ceiling sprinkler to the top of storage during a fire event. Since in-rack sprinklers are installed within the rack below the very top of storage, they are not prone to the same obstruction issues that ceiling sprinklers are, and thus their own set of obstruction guidelines are provided in Chapter 25.

25.5.1.2* Where in-rack sprinklers are installed in longitudinal flues, they shall be located at an intersection of transverse and longitudinal flues while not exceeding the maximum horizontal spacing rules.

A.25.5.1.2 In-rack sprinklers have proven to be the most effective way to fight fires in rack storage. To accomplish this, however, in-rack sprinklers must be located where they will operate early in a fire as well as direct water where it will do the most good. Simply maintaining

EDUFIRE.IR

a minimum horizontal spacing between sprinklers does not achieve this goal. This is because fires in rack storage develop and grow in transverse and longitudinal flues, and in-rack sprinklers do not operate until flames actually impinge on them. To ensure early operation and effective discharge, in-rack sprinklers in the longitudinal flue of open racks must be located at transverse flue intersections.

In-rack sprinklers located in the longitudinal flue must be positioned at the intersection of the transverse and longitudinal flues to ensure that the sprinklers are located where the fire is likely to be. A fire will travel under a load of storage until it reaches a flue space and will then move up that flue space. Locating the sprinkler at the intersection of the flue spaces ensures that the fire will encounter an in-rack sprinkler. Depending on the maximum allowable distance between in-rack sprinklers and the distance between rack uprights, it might be necessary to place sprinklers at every intersection of transverse flues, but it also might be possible to install in-rack sprinklers at every other intersection. Rack uprights, which help form natural transverse flues, are generally a good location to install longitudinal sprinklers because the rack uprights help to protect the in-rack sprinklers from damage as loads are moved into and out of the racks.

Even if installed at every transverse flue space, the maximum horizontal spacing of in-rack sprinklers also must be taken into account. The easiest way to do that is to first locate in-rack sprinklers in the longitudinal flue spaces at the intersection with transverse flue spaces at the rack uprights. Then, the maximum allowable distance between sprinklers should be checked to see if additional sprinklers need to be added. If additional sprinklers are needed, they should be placed at other intersections of flues. If there are no more intersections, sprinklers should be placed along the longitudinal flue between the available transverse flues. If there are no transverse flues, the maximum spacing rules must be followed, and sprinklers should be installed in the racks wherever possible, while minimizing the potential for them to be broken by the commodity being moved into and out of the racks. Note that there is no minimum distance between in-rack sprinklers. It is possible — and quite common — to see in-rack sprinklers less than 6 ft (1.8 m) apart.

While the provisions of 25.5.1.2 require the installation of in-rack sprinklers at the intersection of the longitudinal and transverse flue spaces, which can typically coincide with the location of the rack uprights, rack storage arrangements greater than 25 ft (7.6 m) are required to have an in-rack sprinkler offset from the edge of the upright by a minimum distance of 3 in. (75 mm) (see 25.5.1.6).

25.5.1.3 Where horizontal distances between transverse flues exceed the maximum allowable horizontal linear spacing for in-rack sprinklers, in-rack sprinklers shall be installed at the intersection of the transverse and longitudinal flues, and additional in-rack sprinklers shall be installed between transverse flues to meet the maximum allowable horizontal linear spacing rules for in-rack sprinklers.

25.5.1.4 Where no transverse flues exist, horizontal spacing of in-rack sprinklers shall not exceed the maximum allowable spacing rules.

25.5.1.5 Where in-rack sprinklers are installed to protect a higher-hazard commodity that occupies only a portion of the length of a rack, in-rack sprinklers shall be extended a minimum of 8 ft (2.4 m) or one bay, whichever is greater, in each direction along the rack on either side of the higher hazard. The in-rack sprinklers protecting the higher hazard shall not be required to extend across the aisle.

The requirement in 25.5.1.5 is similar to the 15 ft (4.6 m) extension of the higher hazard ceiling protection area specified in 20.10.1. However, an 8 ft (2.4 m) extension of protection within the rack is believed to be adequate to absorb the extra heat that might be released from a fire in the higher hazard commodity within the rack. If the adjacent bays contain in-rack sprinklers installed to a lower hazard, the pipe sizing should be adequate for the in-rack demand of the higher hazard for the 8 ft (2.4 m) distance.

25.5.1.6* Where rack storage is over 25 ft (7.6 m) in height, in-rack sprinklers shall be a minimum 3 in. (75 mm) radially from the side of rack uprights.

For storage heights exceeding 25 ft (7.6 m), the horizontal position of in-rack sprinklers must be based on proximity to the rack uprights for optimum water distribution, with a minimum horizontal separation of at least 3 in. (75 mm) from the sprinkler to the edge of the rack uprights. This requirement, along with

EDUFIRE.IR

avoiding obstruction to the in-rack sprinkler's discharge pattern by the horizontal beams of the storage rack (see 25.4.3 and 25.5.1.10), are the only obstruction rules that must be followed for in-rack sprinklers. Other rules, such as the Three Times Rule (see 10.2.7.2.1.3), do not apply to in-rack sprinklers.

A.25.5.1.6 Where rack storage is up to and including 25 ft (7.6 m) in height, in-rack sprinklers should be a minimum 3 in. (75 mm) radially from the side of rack uprights.

25.5.1.6.1 Where rack storage of Class I through Class IV commodities is up to and including 25 ft (7.6 m), in-rack sprinklers shall be permitted to be installed horizontally without regard to rack uprights. *(See Section C.17.)*

While it is not mandatory that the horizontal position of in-rack sprinklers for storage up to 25 ft (7.6 m) in height be for optimum water distribution, it is recommended that the installation location for the in-rack sprinkler is at least 3 in. (75 mm) from the edge of the rack uprights.

C.17 [25.5.1.6.1] In all tests with in-rack sprinklers, obstructions measuring 3 in. × 3 ft (75 mm × 900 mm) were introduced on each side of the sprinkler approximately 3 in. (75 mm) from the sprinkler to simulate rack structure member obstruction. This obstruction had no effect on sprinkler performance in the 20 ft (6.1 m) high tests.

Tests 103, 104, 105, and 109 in the 30 ft (9.1 m) high test with in-rack sprinklers obstructed by rack uprights produced unsatisfactory results. Tests 113, 114, 115, 117, 118, and 120 in the 30 ft (9.1 m) high test series with in-rack sprinklers located a minimum of 2 ft (600 mm) from rack uprights produced improved results.

25.5.1.7 Where rack storage is over 25 ft (7.6 m) in height and requires face sprinklers, the face sprinklers shall be located within the rack a minimum 3 in. (75 mm) from rack uprights and no more than 18 in. (450 mm) from the aisle face of storage.

Face sprinklers are special in-rack sprinklers that are placed near the aisle, within the rack structure, to provide a sufficient amount of water to the face of the rack that can't be adequately protected by either the ceiling-level sprinklers or in-rack sprinklers installed deeper in the rack, such as those in a longitudinal flue space. These sprinklers are usually installed behind rack uprights to protect them from being damaged. However, each face sprinkler must be at least 3 in. (75 mm) horizontally away from the rack upright so that the spray pattern is not obstructed. In addition, the face sprinklers must be within 18 in. (450 mm) of the rack face, without protruding into the aisle, so they can operate in a timely fashion and provide a sufficient water discharge to the vertical surfaces of the pallet loads facing the aisle.

25.5.1.8 Where single- and double-row rack storage of Class I through Class IV commodities is over 25 ft (7.6 m) in height and protected by CMDA sprinklers at ceiling level, in-rack sprinklers shall be staggered horizontally where installed in accordance with Table 25.9.2.1.1 and Figure 25.9.2.1.1(a) through Figure 25.9.2.1.1(e) for single-row racks or Table 25.9.2.2.1 and Figure 25.9.2.2.1(a) through Figure 25.9.2.2.1(j) for double-row racks.

25.5.1.9 Where multiple-row rack storage of Class I through Class IV commodities is over 25 ft (7.6 m) in height and protected by CMDA sprinklers at ceiling level, in-rack sprinklers shall be staggered horizontally where installed in accordance with Table 25.9.2.3.1 and Figure 25.9.2.3.1(a) through Figure 25.9.2.3.1(c).

25.5.1.10 Where rack storage of Group A plastic commodities is over 25 ft (7.6 m) in height, in-rack sprinklers in longitudinal flues shall be installed with the deflector located at or below the bottom of horizontal load beams or above or below other adjacent horizontal rack members.

25.5.2 Horizontal Spacing of In-Rack Sprinklers.

Horizontal location and spacing on the in-rack sprinklers should take into account both the maximum horizontal spacing allowed by 25.5.2 and the placement of in-rack sprinklers at the intersection of flue spaces in accordance with 25.5.1.2. See the commentary to 25.5.1.2 for additional information.

EDUFIRE.IR

25.5.2.1 General.

25.5.2.1.1 Unless specified elsewhere in this standard, the maximum allowable horizontal spacing of in-rack sprinklers shall be in accordance with 25.5.2.1.2 through 25.5.2.1.4.

25.5.2.1.2 In-rack sprinklers shall be permitted to be installed horizontally less than 6 ft (1.8 m) apart.

In-rack sprinklers are not required to be separated by baffles where they are installed closer than 6 ft (1.8 m) apart because they have been tested for those configurations. In-rack sprinklers are often required to be spaced closer than 6 ft (1.8 m) horizontally so they are aligned with the intersections of the longitudinal and transverse flue spaces. The closer spacing allows the in-rack sprinkler nearest the fire to operate in as timely a manner as possible. With the required vertical clear space provided between the in-rack sprinkler and the top of storage below it, the operating in-rack sprinkler can discharge water not only into the flue space intersection where it is located, but also into the two adjacent flue space intersections on either side of it as well. As a result, it is acceptable for the nearest in-rack sprinklers to be cold soldered as the first operating sprinkler is discharging water into the flue spaces they are protecting.

25.5.2.1.3 For rack storage of rubber tires, the maximum allowable horizontal spacing of in-rack sprinklers shall be 8 ft (2.4 m).

25.5.2.1.4 The maximum allowable horizontal spacing of in-rack sprinklers for Class IV and Group A plastic commodities in miscellaneous, low-piled, and rack storage shall be 10 ft (3.0 m).

25.5.2.2 CMDA Sprinklers Installed at Ceiling Level.

25.5.2.2.1* Where single- and double-row rack storage of Class I through Class IV commodities is up to and including 25 ft (7.6 m) in height and protected by CMDA sprinklers at ceiling level, the maximum allowable horizontal spacing of in-rack sprinklers shall be in accordance with Table 25.5.2.2.1.

TABLE 25.5.2.2.1 *In-Rack Sprinkler Horizontal Spacing for Class I, II, III, and IV Commodities Stored in Single- or Double-Row Racks Up to 25 ft (7.6 m) in Height Protected by CMDA Sprinklers at Ceiling Level*

Commodity Class	*Aisle Width*		*Encapsulated*	*Maximum Allowable Linear Spacing*	
	ft	*m*		*ft*	*m*
I, II	8	2.4	No	12	3.7
			Yes	8	2.4
	4	1.2	No	12	3.7
			Yes	8	2.4
III	8	2.4	No	12	3.7
			Yes	8	2.4
	4	1.2	No	10	3
			Yes	8	2.4
IV	8	2.4	No	10	3
			Yes	8	2.4
	4	1.2	No	10	3
			Yes	8	2.4

A.25.5.2.2.1 Spacing of sprinklers on branch lines in racks in the various tests demonstrates that maximum spacing as specified is proper.

25.5.2.2.2 Where multiple-row rack storage of Class I through Class IV commodities is up to and including 25 ft (7.6 m) in height and protected by CMDA sprinklers at ceiling level, the maximum allowable horizontal spacing of in-rack sprinklers shall be in accordance with Table 25.5.2.2.2.

EDUFIRE.IR

With multiple-row racks, additional consideration has to be given to the area of coverage that the in-rack sprinkler will protect within the rack. Table 25.5.2.2.2 allows in-rack sprinklers to cover only 100 ft² (9.3 m²) of rack structure for Class I through Class III commodities and limits in-rack sprinklers protecting Class IV commodities to 80 ft² (7.4 m²). When calculating this area, only the rack structure is to be counted, not the aisle space. For example, if a multiple-row rack for a Class IV commodity was 16 ft (4.9 m) wide and a single row of in-rack sprinklers was being used to protect all the way across the rack, the maximum area that could be protected by the sprinkler would be 80 ft² (7.4 m²), in accordance with Table 25.5.2.2.2, and the sprinklers could be only 5 ft (1.5 m) apart, even though the table allows them to be up to 8 ft (2.4 m) apart.

(A) The rack plan view shall be considered in determining the area covered by each sprinkler.

(B) The aisles shall not be included in area calculations.

The requirements in 25.5.2.2.2 and its subparagraphs (A) and (B) provide direction on how determine the area covered per in-rack sprinkler within the rack. The area is determined based on the horizontal projection, represented in a plan view, by the horizontal distance between in-rack sprinklers along the length of the rack and the width of the rack covered per line of in-rack sprinklers.

TABLE 25.5.2.2.2 *In-Rack Sprinkler Horizontal Spacing for Class I, II, III, and IV Commodities Stored in Multiple-Row Racks Up to 25 ft (7.6 m) in Height Protected by Control Mode Density/Area Sprinklers at Ceiling Level*

	Linear Spacing		*Area Spacing*	
Commodity Class	***ft***	***m***	***ft²***	***m²***
I, II, III	12	3.7	100	9.3
IV	8	2.4	80	9

25.5.2.2.3* For horizontal spacing of in-rack sprinklers not addressed by 25.5.2.2.1 or 25.5.2.2.2, the maximum allowable horizontal spacing of in-rack sprinklers shall be in accordance with Table 25.5.2.2.3.

TABLE 25.5.2.2.3 *Horizontal Spacing for In-Rack Sprinklers in Combination with CMDA Ceiling Sprinklers That Are Represented by Figures*

		Storage Height		
Commodity Class	***Storage Rack Type***	***ft***	***m***	***Applicable Table and/or Figure for Horizontal Spacing of In-Rack Sprinklers***
Class I through IV	Single-row	Over 25	Over 7.6	Table 25.9.2.1.1 and Figures 25.9.2.1.1(a)–(e)
	Double-row	Over 25	Over 7.6	Table 25.9.2.2.1 and Figures 25.9.2.2.1(a)–(j)
	Multiple-row	Over 25	Over 7.6	Table 25.9.2.3.1 and Figures 25.9.2.3.1(a)–(c)
Group A plastics	Single-, double-, and multiple-row	Up to 25	Up to 7.6	Figures 25.9.3.1(a)–(e)
Group A plastics, cartoned	Single-row	Over 25	Over 7.6	Figures 25.9.4.1.1(a)–(d)
	Double-row	Over 25	Over 7.6	Figures 25.9.4.2.1(a)–(c)
	Multiple-row	Over 25	Over 7.6	Figures 25.9.4.3.1(a)–(f)
Group A plastics, exposed nonexpanded	Single-row, maximum 3 ft (0.9 m) deep	Over 25	Over 7.6	Figure 25.9.4.1.3
	Multiple-row	Over 25	Over 7.6	Figures 25.9.4.3.1(a)–(f)

A.25.5.2.2.3 The protection area per sprinkler under barriers should be no greater than 80 ft² (7.4 m²) in Figure 25.9.4.3.1(a) and Figure 25.9.4.3.1(b). The protection area per sprinkler under barriers should be no greater than 50 ft² (4.6 m²) in Figure 25.9.4.3.1(c) through Figure 25.9.4.3.1(f).

EDUFIRE.IR

25.5.2.3 CMSA Sprinklers Installed at Ceiling Level.

25.5.2.3.1 Where rack storage of Class I through Class IV commodities is up to and including 25 ft (7.6 m) in height and protected by CMSA sprinklers at ceiling level, the maximum allowable horizontal spacing of in-rack sprinklers shall be 8 ft (2.4 m).

25.5.2.3.2 Where rack storage of plastic commodities is up to and including 25 ft (7.6 m) in height and protected by CMSA sprinklers at ceiling level, the maximum allowable horizontal spacing of in-rack sprinklers shall be 5 ft (1.5 m).

25.5.2.3.3 Where rack storage of Class I through Class IV commodities is over 25 ft (7.6 m) in height and protected by CMSA sprinklers at ceiling level, the maximum allowable horizontal spacing of in-rack sprinklers shall be 5 ft (1.5 m).

25.5.2.4 ESFR Sprinklers Installed at Ceiling Level. Where rack storage is protected by ESFR sprinklers at ceiling level, the maximum allowable horizontal spacing of in-rack sprinklers shall be 5 ft (1.5 m).

25.6 Protection of Racks with Solid Shelves.

25.6.1 General. The requirements in this chapter for the installation of in-rack sprinklers shall apply to racks with solid shelves except as modified in this section.

25.6.2 Ceiling-level sprinkler design criteria for CMDA, CMSA, and ESFR sprinklers shall be an applicable option for open racks combined with in-rack sprinklers installed in accordance with the criteria for solid shelving.

25.6.3 Vertical Spacing and Location of In-Rack Sprinklers in Racks with Solid Shelves.

25.6.3.1 Where CMDA sprinklers are at ceiling level protecting racks with solid shelving that exceeds 20 ft^2 (1.9 m^2) in area but not 64 ft^2 (5.9 m^2), in-rack sprinklers shall not be required below every shelf but shall be installed below shelves at intermediate levels not more than 6 ft (1.8 m) apart vertically. *(See Section C.11.)*

C.11 [25.6.3.1] Test 98 with solid shelves 24 ft (7.3 m) long and 7½ ft (2.3 m) deep at each level produced total destruction of the commodity in the main rack and jumped the aisle. Density was 0.3 gpm/ft^2 (12.2 mm/min) from the ceiling sprinklers only. Test 108 with shelves 24 ft (7.3 m) long and 3½ ft (1.0 m) deep and with a 6 in. (150 mm) longitudinal flue space and one level of sprinklers in the rack resulted in damage to most of the commodity in the main rack but did not jump the aisle. Density from ceiling sprinklers was 0.375 gpm/ft^2 (15.3 mm/min), and rack sprinklers discharged at 15 psi (1.0 bar).

These tests did not yield sufficient information to develop a comprehensive protection standard for solid shelf racks. Items such as increased ceiling density, use of bulkheads, other configurations of sprinklers in racks, and limitation of shelf length and depth should be considered.

Where such rack installations exist or are contemplated, the damage potential should be considered, and sound engineering judgment should be used in designing the protection system.

Test 98, with solid shelving obstructing both the longitudinal and transverse flue space, produced unsatisfactory results and indicates a need for sprinklers at each level in such a rack structure.

Test 147 was conducted with ceiling sprinklers only. Density was 0.45 gpm/ft^2 (18.3 mm/min) with a sprinkler spacing of 100 ft^2 (9 m^2). A total of 47 sprinklers opened, and 83 percent of the

EDUFIRE.IR

commodity was consumed. The fire jumped both aisles and spread to both ends of the main and target racks. The test was considered unsuccessful.

Test 148 was conducted with ceiling sprinklers and in-rack sprinklers. In-rack sprinklers were provided at each level (top of first, second, and third tiers) and were located in the longitudinal flue. They were directly above each other and 24 ft (7.3 m) on center or 22 ft (6.7 m) on each side of the ignition flue. Ceiling sprinkler discharge density was 0.375 gpm/ft^2 (15.3 mm/min). In-rack sprinkler discharge pressure was 30 psi (2.1 bar). A total of 46 ceiling sprinklers and three in-rack sprinklers opened, and 34 percent of the commodity was consumed. The fire consumed most of the material between the in-rack sprinklers and jumped both aisles.

It is not uncommon to see rack storage with transverse flues at rack uprights and 4 ft × 8 ft (1.2 m × 2.4 m) sheets of plywood between the rack uprights forming solid shelves that are 32 ft^2 (3 m^2). Where this type of solid shelf rack has shelves spaced every 18 in. (450 mm) or 2 ft (0.6 m) vertically, installing in-rack sprinklers under every level would be excessive. As long as the shelves are not blocking more than 64 ft^2 (5.9 m^2), the in-rack sprinklers only need to be placed every 6 ft (1.8 m) vertically, which would leave three or four shelves between each level of in-rack sprinklers.

Note that the allowance to install in-rack sprinklers only beneath intermediate solid shelf levels with the maximum 6 ft (1.8 m) intervals applies exclusively to ceiling and in-rack sprinkler protection designs where CMDA sprinklers are installed at ceiling level. Where solid shelves exceeding 20 ft^2 (1.9 m^2) are used with CMSA or ESFR sprinkler designs, the provisions of 25.6.3.3 and 25.6.3.4 require the installation of in-rack sprinklers beneath every tier (including those with and without a solid shelf) from the highest level of solid shelving down.

25.6.3.2 Where CMDA sprinklers are at ceiling level protecting racks with solid shelving that exceeds 64 ft^2 (5.9 m^2) in area or where the levels of storage exceed 6 ft (1.8 m), in-rack sprinklers shall be installed below each level of shelving.

Given that 25.6.3.2 requires in-rack sprinklers at a maximum spacing of 6 ft (1.8 m) apart vertically for shelves with an area of 20 ft^2 (1.9 m^2) up to 64 ft^2 (5.9 m^2), shelves spaced greater than 6 ft (1.8 m) apart vertically require sprinklers under every shelf, regardless of whether the shelves are greater than 20 ft^2 (1.9 m^2) or 64 ft^2 (5.9 m^2).

25.6.3.3 Where CMSA sprinklers are at ceiling level and protect racks with solid shelving, in-rack sprinklers shall be installed beneath all tiers under the highest solid shelf.

The requirement in 25.6.3.3, which was new to the 2016 edition of NFPA 13, provides in-rack sprinkler installation criteria where solid shelving is installed within storage racks protected by CMSA sprinklers at ceiling level. The new requirement also addresses concerns with the scenario where solid shelving is installed high up in the storage rack that not only would effectively block the discharge of the overhead CMSA sprinklers but would potentially allow for too much storage below the in-rack sprinklers installed directly under the solid shelving. Depending on the stored commodity hazard and the height of the storage under the solid shelving, the concern was that the discharge from the installed in-rack sprinklers at the upper level height of a solid shelf would be insufficient to make up for the blocked ceiling-level sprinkler discharge for the full height beneath that solid shelf level. Requiring in-rack sprinkler installation beneath every tier from the solid shelf level down addresses that concern and ensures that in-rack sprinkler discharge is available at sufficient vertical intervals.

25.6.3.4 Where ESFR sprinklers are at ceiling level and protect racks with solid shelving, in-rack sprinklers shall be installed beneath all tiers under the highest solid shelf.

The requirement in 25.6.3.4, which was new to the 2016 edition, provides in-rack sprinkler installation criteria where solid shelving is installed within storage racks protected by ESFR sprinklers at ceiling level. The requirement also addresses concerns with the scenario where solid shelving is installed high up in the storage rack that not only would effectively block the discharge of the overhead ESFR sprinklers but would potentially allow for too much storage below the in-rack sprinklers installed directly under the solid shelving. Depending on the stored commodity hazard and the height of the storage under the solid shelving, the concern was that the discharge from the installed in-rack sprinklers at the upper level height of a solid

EDUFIRE.IR

shelf would be insufficient to make up for the blocked ceiling-level sprinkler discharge for the full height beneath that solid shelf level. Requiring in-rack sprinkler installation beneath every tier from the solid shelf level down addresses that concern and ensures that in-rack sprinkler discharge is available at sufficient vertical intervals.

25.6.3.5 Where racks with solid shelves obstruct only a portion of an open rack, in-rack sprinklers shall be installed vertically as follows:

(1) In accordance with 25.6.3.1 and 25.6.3.2 where CMDA sprinklers are installed at ceiling level
(2) In accordance with 25.6.3.3 where CMSA sprinklers are installed at ceiling level
(3) In accordance with 25.6.3.4 where ESFR sprinklers are installed at ceiling level

25.6.4 Horizontal Location and Spacing of In-Rack Sprinklers in Racks with Solid Shelves.

25.6.4.1 Where racks with solid shelves contain storage of Class I through Class IV commodities, the maximum allowable horizontal spacing of in-rack sprinklers shall be 10 ft (3.0 m).

25.6.4.2 Where racks with solid shelves contain storage of Group A plastic commodities, the maximum allowable horizontal spacing of in-rack sprinklers shall be 5 ft (1.5 m).

25.6.4.3 Where racks with solid shelves obstruct only a portion of an open rack, in-rack sprinklers shall be extended beyond the end of the solid shelf a minimum of 4 ft (1.2 m) to the nearest flue space intersection.

25.7 Horizontal Barriers in Combination with In-Rack Sprinklers.

25.7.1* Where required by sections of this chapter, horizontal barriers used in combination with in-rack sprinklers to impede vertical fire development shall be constructed of sheet metal, wood, or similar material and shall extend the full length and depth of the rack.

A.25.7.1 Barriers should be of sufficient strength to avoid sagging that interferes with loading and unloading operations.

25.7.2 Barriers shall be fitted within 2 in. (50 mm) horizontally around rack uprights.

25.8 Alternative In-Rack Sprinkler Protection Options That Are Independent of the Ceiling Sprinkler Design.

25.8.1 In-Rack Sprinkler Protection for Class I Through Class IV and Group A Plastic Commodities That Are Independent of the Ceiling Sprinkler Design, Option 1.

The provisions of 25.8.1, which were new to the 2016 edition, represent a significant alternative to providing localized protection for higher hazard commodities without having to adjust the overhead sprinkler system design. As an example, consider the storage of a Class IV commodity within a select number of rack bays (exceeding the number prescribed by 20.4.14.3) as part of a larger warehouse space that is otherwise designed to store a Class II commodity. Prior to the 2016 edition, this arrangement would have been required to be protected with an overhead sprinkler system design alone or in combination with in-rack sprinklers for a Class IV commodity.

Using a combination of closely spaced in-rack sprinklers within the rack discharging at 60 gpm (230 L/min) and horizontal barriers allows for localized protection of such higher hazard commodities without benefit of the surrounding ceiling sprinkler system design. The design criteria for the ceiling sprinklers

EDUFIRE.IR

in this example would be allowed to remain for the protection of the Class II commodity, while the area containing the Class IV commodity would be protected using the alternative in-rack sprinkler/barrier protection. The details for design of such protection are prescribed in 25.8.1.1 through 25.8.1.10.

25.8.1.1 Where Class I, II, III, IV, and Group A plastic commodities are protected in accordance with the guidelines of this section, the in-rack sprinkler system shall not be required to be hydraulically balanced with the ceiling-level sprinkler system.

This allowance in 25.8.1.1, combined with that provided by 25.8.1.10, represents the most significant advantage for the use of the alternative protection allowed by 25.8.1. By not requiring the demands of the ceiling sprinklers and in-rack sprinklers to be balanced or added together, the full available water supply can be calculated for the in-rack sprinklers and the ceiling sprinklers separately. This allowance provides alternative protection without affecting the overall demand for the ceiling sprinkler system.

25.8.1.2 Where a storage rack will not be solely dedicated to the in-rack sprinkler system outlined in this section, either of the following shall apply:

(1) Extend the protection outlined in this section horizontally one pallet load in all directions beyond the commodity storage area that is being protected by the alternative in-rack sprinkler arrangement.
(2) Install a vertical barrier to segregate the commodities that are being protected by the alternative in-rack sprinkler arrangement.

The provisions of 25.8.1.2 address the situation where the storage of the higher hazard commodity occupies only a portion of the length of a larger rack array. In those circumstances, the following two options are available:

1. The in-rack sprinkler protection and horizontal barriers required by 25.8.1 can be extended at least one pallet beyond the edge of the higher hazard commodity, which is deemed sufficient to check the fire spread further into rack.
2. A vertical barrier can be used to provide a surrounding enclosure to check the fire spread.

While no specific construction criteria are prescribed for the vertical barriers, construction consistent with that prescribed for the horizontal barriers would be sufficient for such containment purposes.

Exhibit 25.8 illustrates option 1, and Exhibits 25.9 and 25.10 illustrate option 2.

25.8.1.3 Where a storage rack is partially protected by the in-rack sprinkler system outlined in this section, commodities that can be protected by the ceiling-level sprinkler system shall be permitted to be stored vertically above and horizontally adjacent to the portions of the storage rack protected in accordance with this section.

Similar to those in 25.8.1.2, the provisions in 25.8.1.3 address the situation where the storage of the higher hazard commodity occupies only the lower vertical portion of the rack array. In this circumstance, the lower hazard commodity can be stored atop a rack having the lower portions protected using the alternative protection scheme. However, the ceiling design within this area must be sufficient for the storage of the lower hazard commodity to the full overall height storage for such lower hazard commodity. This arrangement is common where commodity is stored atop a rack structure in which the lower portions are protected using the alternative protection specified in 25.8.1. Exhibit 25.11 illustrates this arrangement.

25.8.1.4 Horizontal Barriers for Alternative In-Rack Sprinkler Protection Option 1.

To provide for timely operation of the in-rack sprinklers and to prevent continued vertical extension of the fire upward within the rack, it is critical that horizontal barriers be properly installed. The barriers must be constructed of materials with adequate integrity to survive the initial fire exposure for a sufficient period of time to obtain activation of the in-rack sprinklers. They also must be reasonably tight across the full width and length of the rack, substantially covering the flue spaces, to prevent extension of fire upward between levels. The barriers must be positioned at a maximum vertical interval of 12 ft (3.7 m) for open-frame rack storage to limit the height through which the installed in-rack sprinklers have to penetrate to reach the base of the array. When solid shelves greater than 20 ft^2 (1.9 m^2) are installed, the installation of additional levels of in-rack sprinklers would be needed to ensure the same degree of water penetration through the array.

EDUFIRE.IR

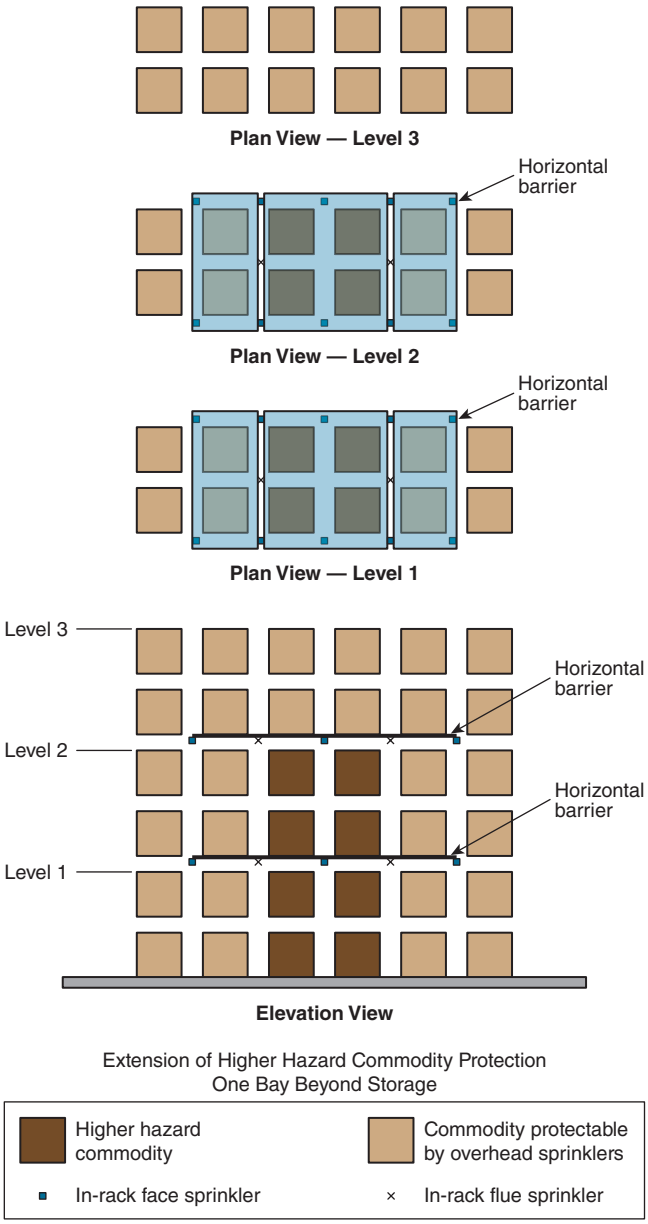

EXHIBIT 25.8 Arrangement in Option 1.

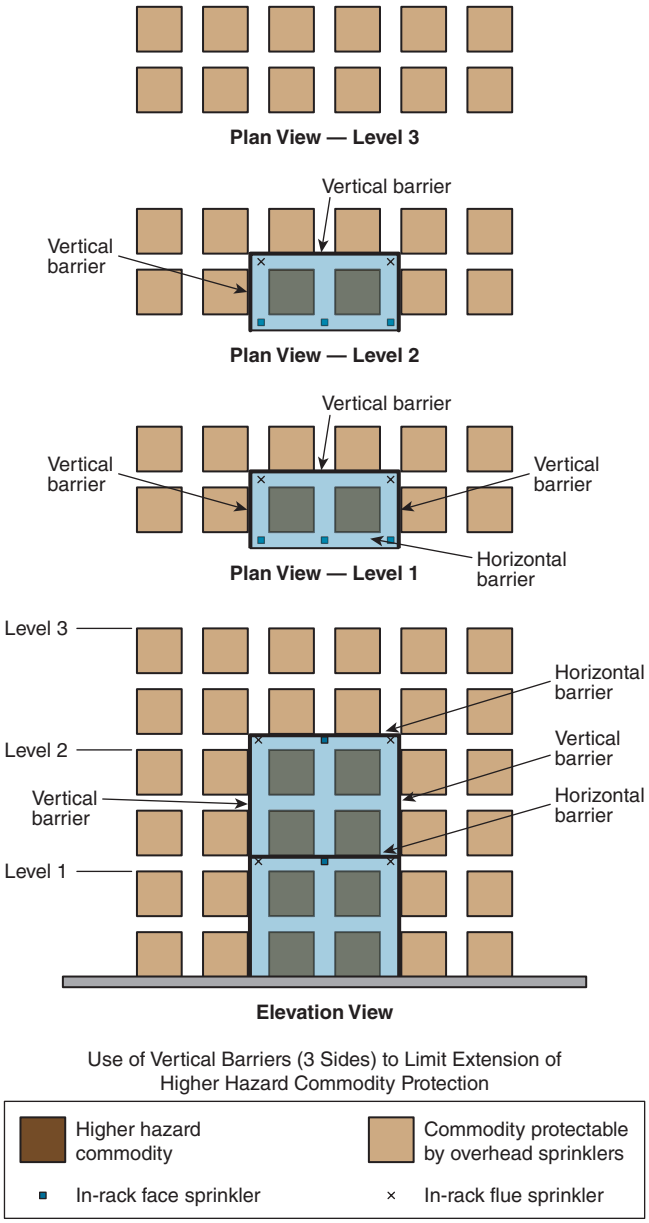

EXHIBIT 25.9 Arrangement in Option 2: Variation 1.

25.8.1.4.1 The barrier shall be constructed of minimum 22 gauge (.78 mm) sheet metal or of minimum ⅜ in. (10 mm) plywood.

25.8.1.4.2 The barrier shall span horizontally to both aisle faces of the rack, covering up all flue spaces of the rack bays in which they are installed.

25.8.1.4.3 A maximum 3 in. (75 mm) wide horizontal gap shall be permitted at rack uprights or other equipment that would create an opening, such as vertical in-rack sprinkler pipe drops.

25.8.1.4.4 Where the dedicated storage is in open racks, horizontal barriers shall be installed at vertical increments not exceeding 12 ft (3.6 m).

EDUFIRE.IR

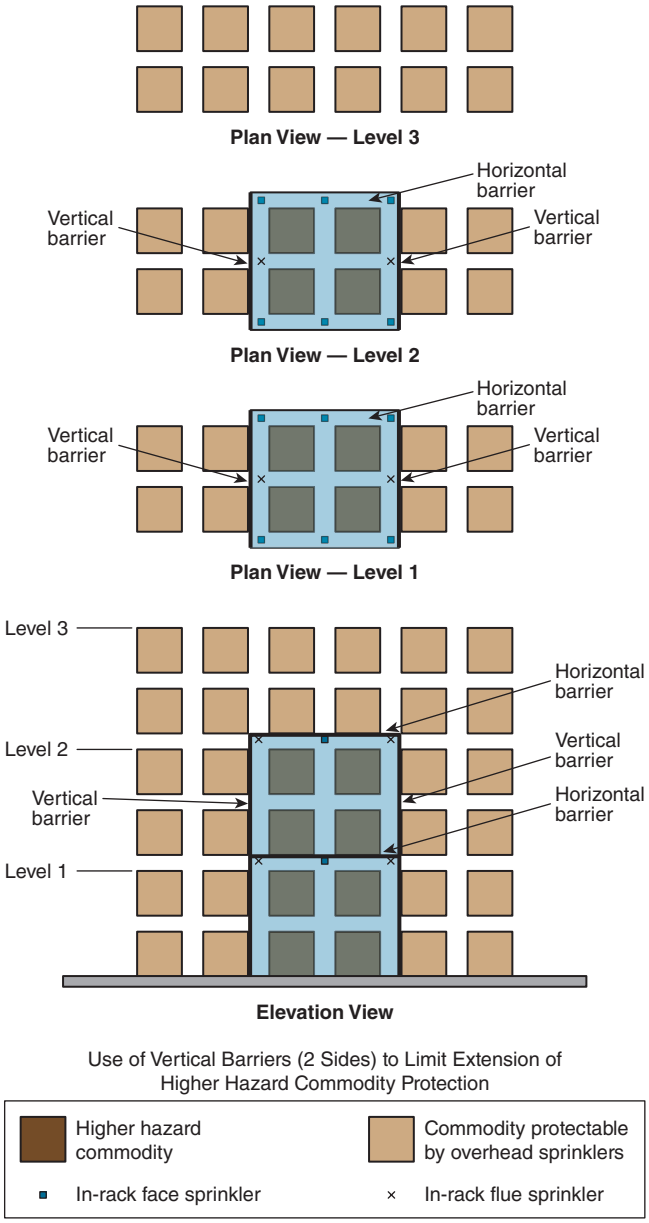

EXHIBIT 25.10 Arrangement in Option 2: Variation 2.

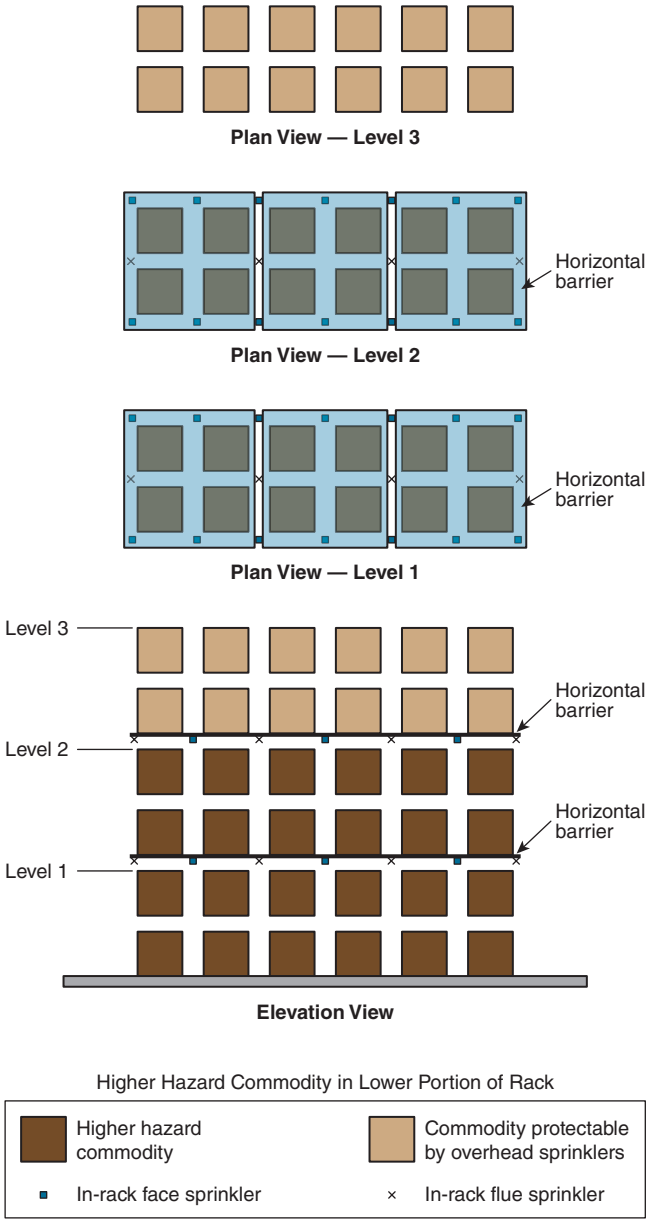

EXHIBIT 25.11 Most Common Arrangement — Higher Hazard Commodity in Lower Portion of Rack (Generic).

25.8.1.4.5 Where the dedicated storage is in racks with solid shelves, horizontal barriers shall be installed at every tier level of the dedicated storage rack.

25.8.1.5 In-rack sprinklers shall be quick-response, minimum K-8.0 (K-115) installed as close to the underside of the horizontal barrier as possible.

The type, position, and spacing of the in-rack sprinklers is equally critical to ensuring their timely operation and effectiveness of penetration through the array. The position and spacing are specified based on the type of rack arrangement being protected as either a single-, double-, or multiple-row rack. The specified spacing and position in line with the flue spaces for the storage place the in-rack sprinklers

EDUFIRE.IR

directly in the natural path of the rising hot fire gases. Combined with the requirement for the use of quick-response (QR) sprinklers, specified spacing and positioning ensure timely operation and place the sprinklers in the best location to allow discharge downward through the same flue spaces, allowing for effective penetration through the storage. It also delivers water to the seat of the fire, wets within the flue to limit horizontal fire extension, and further checks the hot gas extension through the limited opening allowed within the barrier.

25.8.1.6 Alternative In-Rack Sprinkler Protection Option 1 for Single-Row Racks.

25.8.1.6.1 For single-row racks, in-rack sprinklers shall be installed beneath horizontal barriers at each rack upright and within the rack bay as shown in Figure 25.8.1.6.1.

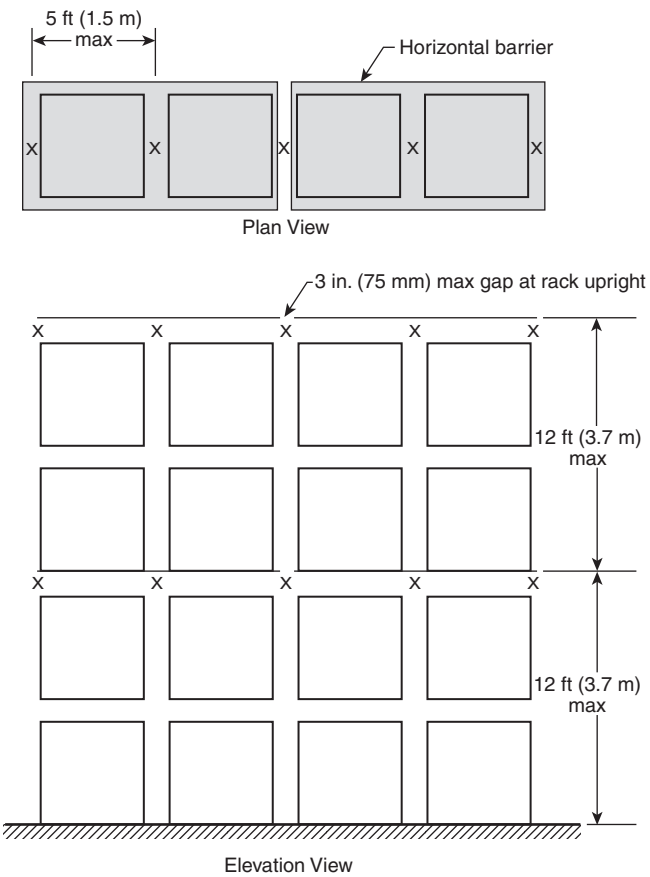

FIGURE 25.8.1.6.1 *Alternative In-Rack Sprinkler Protection Option 1 for Single-Row Racks.*

25.8.1.6.2 The maximum allowable horizontal spacing between in-rack sprinklers shall not exceed 5 ft (1.5 m).

25.8.1.7 Alternative In-Rack Sprinkler Protection Option 1 for Double-Row Racks.

25.8.1.7.1 For double-row racks, in-rack sprinklers shall be installed beneath horizontal barriers at each rack upright within the longitudinal flue space and at the face of the rack as well as at the face of each rack bay as shown in Figure 25.8.1.7.1.

25.8.1.7.2 The maximum allowable horizontal spacing between in-rack sprinklers shall not exceed 5 ft (1.5 m) at the rack face and 10 ft (3.0 m) within the longitudinal flue space.

EDUFIRE.IR

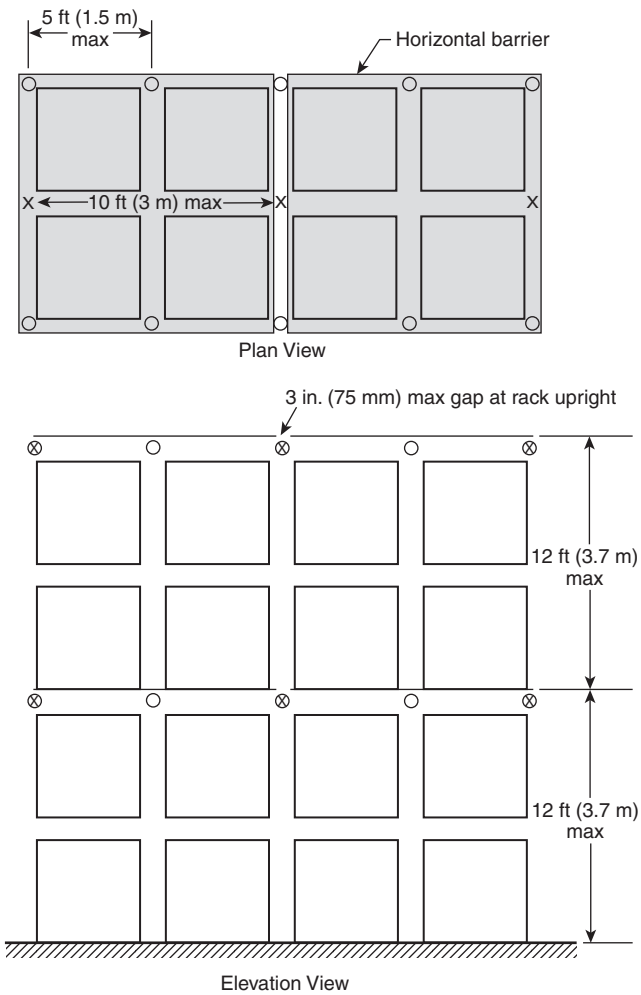

FIGURE 25.8.1.7.1 *Alternative In-Rack Sprinkler Protection Option 1 for Double-Row Racks.*

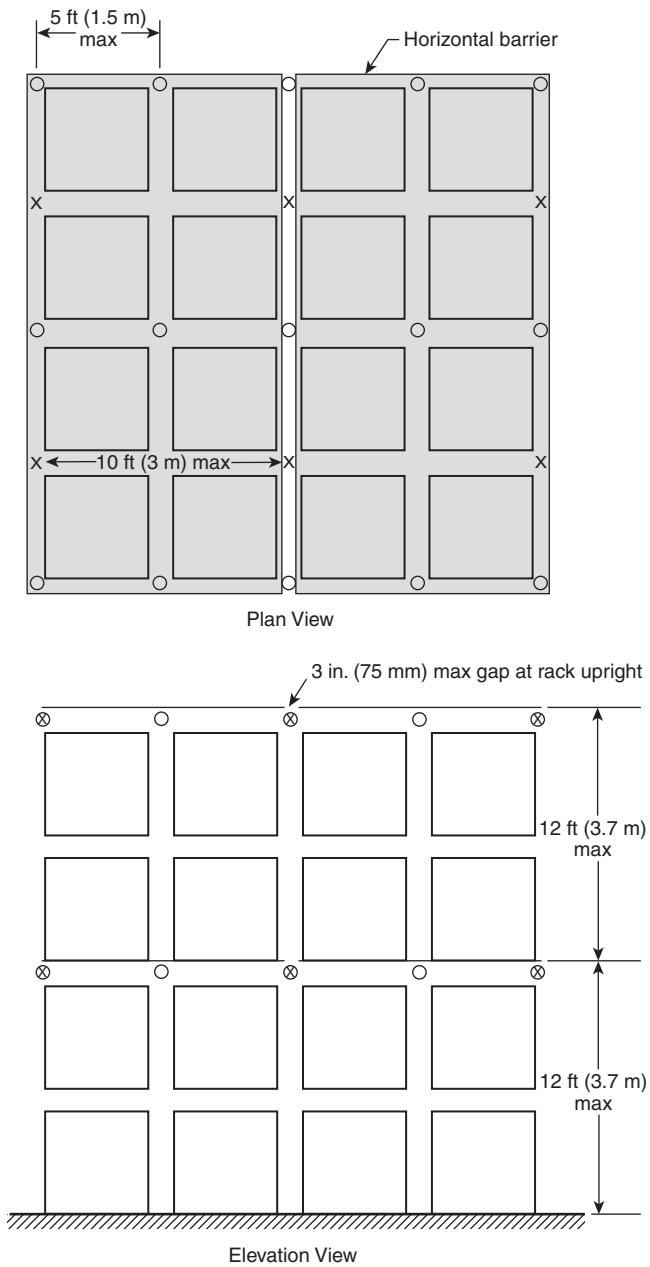

FIGURE 25.8.1.8.1 *Alternative In-Rack Sprinkler Protection Option 1 for Multiple-Row Racks.*

25.8.1.8 Alternative In-Rack Sprinkler Protection Option 1 for Multiple-Row Racks.

25.8.1.8.1 For multiple-row racks, an alternating in-rack sprinkler arrangement shall be installed within adjacent transverse flue spaces and with sprinklers at the face of each flue space as shown in Figure 25.8.1.8.1.

25.8.1.8.2 The maximum allowable horizontal spacing between in-rack sprinklers at the face and at each alternating rack bay shall not exceed 5 ft (1.5 m) and shall not exceed 10 ft (3.0 m) between in-rack sprinklers at every other rack bay.

EDUFIRE.IR

25.8.1.9 In-Rack Sprinkler System Design. The in-rack sprinkler system design outlined in this section shall be based on a minimum flow of 60 gpm (230 L/min) from the most remote six in-rack sprinklers for single-row racks or the most remote eight in-rack sprinklers for both double-row and multiple-row racks.

Using a minimum design discharge of 60 gpm (230 L/min) per sprinkler over the indicated number of design sprinklers provides a substantial discharge momentum to further enhance the effectiveness of penetration and fire control.

25.8.1.10 Ceiling-Level Sprinkler System Design. The ceiling-level sprinkler system shall be designed based on the highest commodity hazard not protected by the in-rack sprinkler system outlined in this section.

This allowance, combined with that provided by 25.8.1.1, represents the most significant advantage for the use of the alternative protection allowed by 25.8.1. By not requiring the demands of the ceiling sprinklers and in-rack sprinklers to be balanced or added together, the full available water supply can be calculated for the in-racks and the ceiling sprinklers separately. This allowance provides alternative protection without affecting the overall demand for the ceiling sprinkler system.

25.8.2 In-Rack Sprinkler Protection for Class I Through Class IV and Group A Plastic Commodities That Are Independent of the Ceiling Sprinkler Design, Option 2.

The provisions of 25.8.2, which are new to the 2019 edition, represent a new in-rack protection scheme where ESFR sprinklers are being used as in-rack sprinklers and (1) do not need to be hydraulically balanced with the ceiling sprinklers; (2) depending on the commodity hazard, can be installed on either 30 ft (9.1 m) or 40 ft (12.2 m) vertical increments; and (3) allow for storage heights greater than 10 ft (3.0 m) above the top level of in-rack sprinklers. This in-rack sprinkler protection arrangement works by placing the in-rack sprinklers strategically within the storage racks, on rather close horizontal spacing, so that the in-rack sprinklers operate before the flames reach the tier level at which the sprinklers are installed, and by providing a high discharge rate of water that can quickly reach the base of the storage array and suppress the fire.

Details regarding the full-scale fire testing that was used to create this in-rack sprinkler protection arrangement are provided in the FM Global technical report entitled *Large-Scale Validation of (1) In-Rack Automatic Sprinkler Designs for Open-Frame Rack Storage Using Quick-Response, Pendent K200 lpm/bar$^{1/2}$ (K14.0 gpm/psi$^{1/2}$) and Larger Sprinklers, and (2) Protection of Uncartoned Unexpanded Plastics in Open-Frame Double-Row Racks Using Two Different In-Rack Sprinkler Protection Arrangements*.

25.8.2.1 Protection of closed-top Class I through Class IV and Group A plastic commodities (i.e., no open-top containers) stored on single-, double-, or multiple-row racks without solid shelves shall be permitted to be protected in accordance with this section.

Because the in-rack sprinkler protection arrangement in 25.8.2.1 relies on the sprinkler discharge making its way vertically down through the entire height of the storage array, neither the storage rack arrangement nor the stored commodity can be allowed to interrupt the discharge. As a result, the storage arrangement must meet the definition of *open rack* in 3.3.140, and the stored commodity is not allowed to be maintained in open-top containers.

25.8.2.2 In-rack sprinkler systems shall be wet-pipe only.

Because the in-rack sprinkler protection arrangement in 25.8.2.2 relies on the sprinklers activating and providing water onto the fire before the flames reach the tier level where in-rack sprinklers have been installed, there can be no delay in the discharge of the water from the sprinklers. As a result, the in-rack sprinklers must be installed using a wet pipe sprinkler system.

25.8.2.3 In-rack sprinklers shall be ESFR, pendent, and ordinary-temperature-rated.

It is important that the in-rack sprinklers used for the protection arrangement in 25.8.2.3 are ESFR, which are standard-coverage sprinklers, as opposed to extended-coverage sprinklers, due to the close spacing of the in-rack sprinklers and the different discharge patterns those two different types of sprinklers have.

EDUFIRE.IR

An in-rack sprinkler protection arrangement that utilizes K-25.2 (K-360) extended-coverage pendent sprinklers is provided in 25.8.3.

25.8.2.3.1 Minimum K-14.0 (K-200) ESFR sprinklers shall be installed where the minimum required flow is 100 gpm (380 L/min) or less.

25.8.2.3.2 Minimum K-22.4 (K-320) ESFR sprinklers shall be installed where the minimum required flow exceeds 100 gpm (380 L/min).

25.8.2.4 Depending on the type of storage rack being protected, in-rack sprinklers shall be positioned horizontally in accordance with Figure 25.8.2.4(a) through Figure 25.8.2.4(f) and the following:

(1) The minimum horizontal distance between in-rack sprinklers shall be 27 in. (700 mm), with the maximum horizontal distance being 4.5 ft (1.4 m), unless shown otherwise in the applicable figures.
(2) Except as shown in Figure 25.8.2.4(c), all in-rack sprinklers shall be located within the footprint of the rack structure.
(3) All face sprinklers shall be positioned so that the horizontal distance between the face of the storage rack and the outer edge of storage, if it protrudes into the storage aisle, does not exceed 18 in. (450 mm).

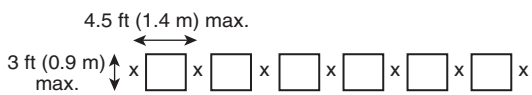

FIGURE 25.8.2.4(a) *Plan View of In-Rack Sprinkler Arrangement for Open Single-Row Racks Up to 3 ft (0.9 m) Deep.*

FIGURE 25.8.2.4(b) *Plan View of In-Rack Sprinkler Arrangement for Open Single-Row Racks Up to 6 ft (1.8 m) Deep.*

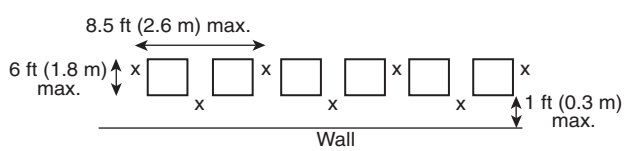

FIGURE 25.8.2.4(c) *Plan View of In-Rack Sprinkler Arrangement for Open Single-Row Racks Up to 6 ft (1.8 m) Deep Located Against a Wall.*

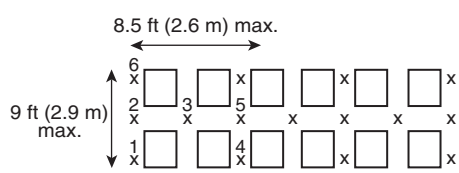

FIGURE 25.8.2.4(d) *Plan View of In-Rack Sprinkler Arrangement for Open Double-Row Racks Up to 9 ft (2.7 m) Deep.*

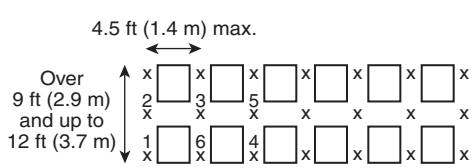

FIGURE 25.8.2.4(e) *Plan View of In-Rack Sprinkler Arrangement for Open Double-Row Racks Up to 12 ft (3.7 m) Deep.*

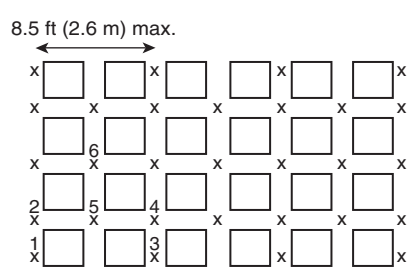

FIGURE 25.8.2.4(f) *Plan View of In-Rack Sprinkler Arrangement for Open Multiple-Row Racks.*

EDUFIRE.IR

Figure 25.8.2.4(a) through Figure 25.8.2.4(f) show in-rack sprinklers installed on close horizontal spacing. Such spacing is required to ensure that the in-rack sprinklers operate well before the flames reach the tier level where the in-rack sprinklers have been installed. Coupled with the proper in-rack sprinkler discharge, close horizontal spacing of the in-rack sprinklers helps to ensure that the fire does not travel vertically past the in-rack sprinklers and operate ceiling-level sprinklers.

25.8.2.5 The maximum allowable vertical distance between in-rack sprinklers for cartoned expanded Group A plastics, exposed nonexpanded Group A plastics, and exposed expanded Group A plastics shall be 30 ft (9.1 m).

25.8.2.5.1 The maximum allowable vertical distance between in-rack sprinklers for Class I through Class IV and cartoned nonexpanded Group A plastics shall be 40 ft (12.2 m).

25.8.2.5.2 A minimum 6 in. (150 mm) vertical distance between the top of storage and the in-rack sprinkler deflector shall be maintained.

25.8.2.6 Regardless of the number of in-rack sprinkler levels installed, the number of sprinkler levels for the in-rack sprinkler system design shall be based on the single most hydraulically remote in-rack sprinkler level and the minimum number of in-rack sprinklers for this level in accordance with Table 25.8.2.6.

Unlike traditional in-rack sprinkler designs that require the operation of in-rack sprinklers on the top two levels where more than one level of in-rack sprinklers are installed, the requirements of 25.8.2.6 allow the designer to hydraulically calculate only a single level of in-rack sprinklers. That is because the test results with this particular in-rack sprinkler arrangement did not allow the fire to travel vertically past the in-rack sprinklers, even when the test commodity was exposed expanded Group A plastics.

TABLE 25.8.2.6 *Number of Sprinklers in the In-Rack Sprinkler Design*

IRAS Installation Arrangement; Figure	*Number of Sprinklers in the In-Rack Design*	
	Class I Through IV and Cartoned Group A Plastics	*Exposed Group A Plastics*
Single-row racks up to 3 ft (0.9 m) deep; Figure 25.8.2.4(a)	4	4
Single-row racks up to 6 ft (1.8 m) deep; Figures 25.8.2.4(b) and 25.8.2.4(c)	5	5
Double- and multiple-row racks; Figures 25.8.2(d), 25.8.2.4(e) and 25.8.2.4(f)	6	6 and 6*

*This represents 6 sprinklers in the most remote rack as well as 6 sprinklers in the nearest adjacent rack. See Figures 25.8.2.4(d), 25.8.2.4(e), and 25.8.2.4(f) to determine which 6 sprinklers to account for in the in-rack sprinkler design for double- and multiple-row racks.

The design requirements for exposed Group A plastics is unique in that it requires in-rack sprinklers from two adjacent storage racks to be included in the hydraulic calculations, as opposed to just the most remote storage rack being protected. If the protection arrangement is for an isolated storage rack — where there is more than an 8 ft (2.4 m) horizontal distance between it and an adjacent storage rack — then the intent is to have the design apply to a single storage rack using 6 sprinklers in the hydraulic calculations as opposed to 12 in-rack sprinklers.

C.18 [25.8.2.6] In all except one case, using the standard commodity with one line of sprinklers installed in racks, only two sprinklers opened. In the one exception, two sprinklers opened in the main rack, and two sprinklers opened in the target rack.

25.8.2.7 The minimum flow required in the system design shall be from the most remote in-rack sprinkler in accordance with Table 25.8.2.7.

EDUFIRE.IR

TABLE 25.8.2.7 Minimum Flow in the In-Rack Sprinkler Design

Maximum Vertical IRAS Installation Increment, ft (m)	*Commodity Hazard*	*Min. K-Factor*	*Minimum Flow from Most Remote IRAS, gpm (L/min)*
30 (9.1)	Class I through IV and cartoned nonexpanded Group A plastic	14.0 (200)	65 (250)
	Cartoned expanded Group A plastic	14.0 (200)	100 (380)
	Exposed Group A plastic	22.4 (320)	120 (455)
40 (12.2)	Class I through Class IV and cartoned nonexpanded Group A plastic	22.4 (320)	120 (455)

Table 25.8.2.7 gives the user information on both the vertical spacing of the in-rack sprinklers and the required flow from each operating in-rack sprinkler. Once the worst-case commodity hazard being maintained within the storage rack is known, the user can determine which vertical spacing of the in-rack sprinklers can be installed as well as how much flow will be needed for the vertical spacing chosen. For example, if cartoned nonexpanded Group A plastics are to be stored 100 ft (30.5 m) high in an open rack arrangement, the user has two options: (1) install three levels of minimum K-14.0 (K200) in-rack sprinklers at vertical increments not exceeding 30 ft (9.1 m) using a minimum flow of 65 gpm (250 L/min), or (2) install two levels of minimum K-22.4 (K320) in-rack sprinklers at vertical increments not exceeding 40 ft (12.2 m) using a minimum flow of 120 gpm (455 L/min).

25.8.2.8 A hose stream allowance per Table 20.12.2.6 shall be included as part of the in-rack sprinkler system design.

Because the worst-case design for the in-rack sprinkler system would include 12 in-rack sprinklers in the hydraulic calculations, the hose stream allowance for the in-rack sprinkler arrangement in 25.8.2 will always be 250 gpm (950 L/min), and its system duration will always be 60 minutes. It should be noted that this in-rack sprinkler arrangement results in a suppressed fire, similar to the performance of ESFR sprinklers installed at ceiling level, which also require a hose stream allowance of only 250 gpm (950 L/min) and a system duration of only 60 minutes.

25.8.2.9 The water supply requirements shall be available for a minimum duration as required in Table 20.12.2.6.

See the commentary following 25.8.2.8 regarding minimum water supply duration.

25.8.2.10 The water supply for the in-rack sprinkler system shall be capable of providing the required in-rack sprinkler system design obtained from 25.8.2 independent of the design requirements of the ceiling sprinkler system protecting this same area.

The requirements of 25.8.2.10 allow the user to size the water supply that will be feeding both the ceiling sprinkler system and the in-rack sprinkler system designed in accordance with 25.8.2 to meet the flow and pressure requirements of each sprinkler system independently instead of both of them flowing concurrently. In other words, the designer can proceed as if the ceiling sprinkler system and the in-rack sprinkler system are in separate buildings and will not interact during the same fire event.

25.8.2.11 The ceiling sprinkler system shall be designed and installed in accordance with the guidelines outlined in Chapters 21, 22, or 23, depending on the commodity hazard and the ceiling-level sprinkler, except as modified in 25.8.2.

25.8.2.11.1* Where the in-rack sprinkler system is designed and installed in accordance with 25.8.2, the top level of in-rack sprinklers shall be considered to be a floor for design purposes of the ceiling sprinkler system.

A.25.8.2.11.1 The design for the ceiling sprinkler system can treat the top level of in-rack sprinklers as a floor, thus allowing for storage heights above the top in-rack sprinkler level that exceed 10 ft (3.0 m). For example, if open rack storage of cartoned Group A plastics was stored to

EDUFIRE.IR

70 ft (21.3 m) high under an 80 ft (24.4 m) ceiling and one level of in-rack sprinklers was installed per 25.8.2 at the 40 ft (12.2 m) level, then the ceiling sprinkler system could be designed based on 30 ft (9.1 m) high storage being maintained under a 40 ft (12.2 m) high ceiling.

25.8.2.12 The water supply for the ceiling system shall be capable of providing the required ceiling sprinkler system design obtained from Chapters 21, 22, or 23 independent of the design requirements of the in-rack sprinkler system obtained from 25.8.2 and protecting this same area.

Similar to the requirements in 25.8.2.10, which indicate that the water supply for the in-rack sprinkler system does not have to be designed to handle the flow from the ceiling sprinkler concurrently with the in-rack sprinkler system, the requirements of 25.8.2.12 are very similar in that they indicate that the water supply for the ceiling sprinkler system does not have to be designed to handle the flow from the in-rack sprinkler concurrently with the in-rack sprinkler system when the in-rack sprinkler system is designed and installed according to the requirements of 25.8.2. That allows the designer to proceed as if the ceiling sprinkler system and the in-rack sprinkler system are in separate buildings and will not interact during the same fire event.

25.8.3 In-Rack Sprinkler Protection for Class I Through Class IV and Group A Plastic Commodities That Are Independent of the Ceiling Sprinkler Design, Option 3.

The provisions of 25.8.3 are new to the 2019 edition and represent a new in-rack protection scheme where quick-response, K-25.2 (K360) extended-coverage pendent sprinklers are being used as in-rack sprinklers and (1) do not need to be hydraulically balanced with the ceiling sprinklers, (2) depending on the commodity hazard, can be installed on either 20 ft (6.1 m) or 30 ft (9.1 m) vertical increments, and (3) allow for storage heights greater than 10 ft (3.0 m) above the top level of in-rack sprinklers. This in-rack sprinkler protection arrangement works by placing the in-rack sprinklers strategically within the storage racks and supplementing them with horizontal barriers. The provision of the horizontal barriers allows the heat from a fire to be trapped under the barrier and to be redirected to the nearest in-rack sprinklers, thus allowing those sprinklers to operate prior to the flames getting vertically past the horizontal barrier. The in-rack sprinklers, typically installed on a maximum 8 ft 3 in. (2.5 m) horizontal spacing, are designed to provide a high discharge rate of water that can quickly reach the base of the storage array and suppress the fire.

Information regarding the test series that resulted in the requirements of this section are addressed in the following Underwriters Laboratories technical reports:

- "Exposed Expanded Group A Plastics Stored in Racks with a Horizontal Barrier Protected by K=25.2 EC In-Rack and K=16.8 ESFR Sprinklers," August 30, 2012
- "Cartoned Unexpanded Group A Plastic Commodity Stored in Racks with Continuous Combustible Horizontal Barriers Protected by K=25.2 EC In-Rack and K=25.2 EC Ceiling Sprinklers," October 30, 2013
- "Exposed Expanded Group A Plastic Commodity Stored in Multi-Row Racks with Continuous Combustible Horizontal Barriers Protected by K=25.2 EC In-Rack and K=25.2 EC Ceiling Sprinklers," July 25, 2014
- "Cartoned Unexpanded Group A Plastic Commodity Stored in Racks with Combustible Horizontal Barriers Protected by K=25.2 EC In-Rack and K=25.2 EC Ceiling Sprinklers," August 17, 2015

25.8.3.1 Class I through Class IV and Group A plastic commodities requiring a greater level of protection than is available from the overhead sprinkler system shall be permitted to be protected in accordance with this section.

Similar to the in-rack protection arrangement addressed in 25.8.1, the in-rack sprinkler protection arrangement addressed in 25.8.3 is not only an option for a new installation, it is ideal for existing locations where the highest commodity hazard cannot be protected by the existing ceiling-level sprinkler system. For such a scenario, the in-rack sprinkler arrangement in 25.8.3 can be used to protect the commodity hazards that cannot be protected by the ceiling sprinkler system, or it can be used to protect a portion of the storage height, thereby leaving a limited storage height above the top level of in-rack sprinklers that can be protected by the ceiling sprinkler.

To illustrate this scenario, take the example of a 35 ft (10.7 m) high warehouse protected with K-16.8 (K-240) pendent ESFR sprinklers at ceiling level designed for a minimum pressure of 52 psi (3.6 bar) from

EDUFIRE.IR

the most remote 12 sprinklers. When the warehouse was first occupied, it was used for double-row open rack storage of cartoned nonexpanded Group A plastics to 30 ft (9.1 m) high. However, due to changes in the products stored at the warehouse and their packaging arrangements, the commodity is now classified as cartoned expanded plastics. Per Chapter 23, the existing ceiling sprinkler design is not acceptable for the protection of rack storage cartoned expanded plastics. In addition, Section 25.11 does not offer an in-rack sprinkler arrangement that can be used in combination with the ESFR sprinklers. However, the in-rack arrangement in 25.8.3.1 will allow for in-rack sprinklers to be installed in combination with a horizontal barrier at the 20 ft (6.1 m) tier level.

Note that the horizontal barrier could also be installed at the 30 ft (9.1 m) tier level; however, installing the barrier at the 20 ft (6.1 m) tier level adds flexibility to allow for exposed Group A plastic commodities, if they are ever introduced into the warehouse, to also be stored under the barrier. That would leave 10 ft (3.0 m) of cartoned expanded Group A plastics above the top level of storage with a 15 ft (4.6 m) vertical distance between the horizontal barrier and the ceiling that can be used as the "maximum ceiling/roof height" for the ceiling sprinkler system's design.

With this in-rack sprinkler system arrangement, the ceiling design would be determined by using a maximum storage height of 10 ft (3.0 m) and a maximum ceiling/roof height of 15 ft (4.6 m) from Table 23.6.1 for a K-16.8 (K-240) pendent ESFR sprinkler. The subsequent required ceiling sprinkler design would be a minimum pressure of 35 psi (2.4 bar) from the most remote 12 sprinklers, which is a less stringent design than what the ceiling sprinkler system was originally designed for and thus would be acceptable.

25.8.3.1.1 Where the storage rack will not be solely dedicated to the storage of commodities requiring a greater level of protection than is available from the overhead sprinkler system, either of the following shall apply:

(1) Extend the protection prescribed by this section horizontally one pallet load in all directions beyond the commodity storage area requiring the higher level of protection.
(2) Install a vertical barrier to segregate the commodities requiring the higher level of protection from any adjacent commodities.

See the commentary provided in 25.8.1.2.

25.8.3.1.2 Commodities that can be protected by the ceiling-level sprinkler system shall be permitted to be stored vertically above and horizontally adjacent to the portions of the storage rack equipped as prescribed by this section.

See the commentary provided in 25.8.1.3.

25.8.3.2 Horizontal Barriers. Horizontal barriers shall be installed at every tier level of the dedicated storage rack where the rack is equipped with solid shelves.

25.8.3.2.1 Where dedicated storage of Class I through IV and cartoned Group A plastic commodity is in open racks, horizontal barriers shall be installed at vertical increments not exceeding 30 ft (9.1 m).

25.8.3.2.2 Where dedicated storage of exposed Group A plastic commodity is in open racks, horizontal barriers shall be installed at vertical increments not exceeding 20 ft (6.1 m).

25.8.3.2.3 The barriers shall span horizontally so that all flue spaces within the rack bay are covered.

25.8.3.2.4 A maximum 3 in. (75 mm) wide gap shall be permitted at rack uprights.

For those cases where the rack uprights are up to a maximum horizontal width of 3 in. (75 mm) measured parallel to the loading aisle, the horizontal barrier can be installed tight up against the rack uprights without any need to extend the barrier into the transverse flue space created by the rack uprights. However, if the horizontal width of the rack uprights exceeds 3 in. (75 mm), then the horizontal barrier will need to be custom fitted so that a maximum 3 in. (75 mm) wide horizontal gap exists between the edges of adjacent horizontal barriers.

Testing of this rack storage arrangement was conducted with double-row racks where the horizontal distance between rack uprights was approximately 8 ft 3 in. (2.5 m). As a result, there was only a single 3 in. (75 mm) wide gap at rack uprights between in-rack sprinklers. Since the limited opening in the horizontal barrier is important to keeping the fire from growing vertically past the combination of in-rack

EDUFIRE.IR

sprinklers and horizontal barriers, care should be taken to replicate this horizontal barrier arrangement in the event the rack uprights are closely spaced and could result in more than one rack upright between in-rack sprinklers.

25.8.3.2.5 The solid barrier shall be installed on a horizontal plane within a rack, beneath which in-rack sprinklers shall be installed, as follows:

(1) The barrier shall be constructed of minimum 22 gauge (.78 mm) sheet metal or of minimum ⅜ in. (10 mm) plywood.
(2) The barrier shall extend to both ends and both aisle faces of the racks covering up both the longitudinal and transverse flue spaces of the rack bays in which they are installed.
(3) The barrier shall be fitted to within 3 in. (75 mm) of any vertical rack member or other equipment that would create an opening, such as vertical in-rack sprinkler pipe drops.

To provide timely operation of the in-rack sprinklers and to prevent continued vertical extension of the fire upward within the rack, it is critical that horizontal barriers be properly installed. The barriers must be constructed of materials with adequate integrity to survive the initial fire exposure for a sufficient period of time to obtain activation of the in-rack sprinklers. They also must be reasonably tight across the full width and length of the rack, substantially covering the flue spaces, to prevent extension of fire upward between levels. The barriers must be positioned at a maximum vertical interval of 30 ft (9.1 m) for open-frame rack storage of commodity hazards up to and including cartoned Group A plastics or a maximum vertical interval of 20 ft (6.1 m) for open-frame rack storage of exposed Group A plastics, to limit the height through which the installed in-rack sprinklers have to penetrate to reach the base of the array. When solid shelves greater than 20 ft^2 (1.9 m^2) are installed, the installation of additional levels of in-rack sprinklers would be needed to ensure the same degree of water penetration through the array.

25.8.3.3 In-Rack Sprinklers. Intermediate-temperature extended-coverage CMDA pendent storage sprinklers with a nominal K-factor of K-25.2 (360) shall be installed beneath each horizontal barrier. The deflector of the sprinkler shall be located as close to the underside of the horizontal barrier as possible with the deflector a minimum of 6 in. (150 mm) above the top of the commodity.

The type, position, and spacing of the in-rack sprinklers are equally critical to ensuring their timely operation and effectiveness of penetration through the array. The position and spacing are specified based on the type of rack arrangement being protected as either a single-, double- or multiple-row rack. Note, however, that for the in-rack sprinkler arrangement in 25.8.3, the location of the in-rack sprinklers is not dependent on the location of the flue space intersections; rather they are spaced at the mid-points of the rack bays to help minimize the impact of sprinkler obstruction by rack uprights. Combined with the requirement for the use of sprinklers equipped with a quick-response thermal element, the specified spacing and positioning ensure not only a timely operation but also a sprinkler discharge with minimal interference from the vertical rack uprights. The in-rack sprinkler discharge rate of 138 gpm (520 L/min), for the allowable vertical sprinkler increments and commodity hazards, results in the suppression of the fire.

25.8.3.3.1 Single-Row Racks.

(A) For single-row racks, sprinklers shall be installed at each rack mid-bay as shown in Figure 25.8.3.3.1(A)(a) for Class I through Class IV and cartoned Group A plastic commodity and Figure 25.8.3.3.1(A)(b) for exposed Group A plastic commodity.

(B) The maximum linear spacing between sprinklers shall not exceed 10 ft (3.1 m).

25.8.3.3.2 Double-Row Racks.

(A) For double-row racks, sprinklers shall be installed within the longitudinal flue space at each rack mid-bay as shown in Figure 25.8.3.3.2(A)(a) for Class I through Class IV and cartoned Group A plastic commodity and Figure 25.8.3.3.2(A)(b) for exposed Group A plastic commodity.

(B) The maximum linear spacing between sprinklers shall not exceed 10 ft (3.1 m).

EDUFIRE.IR

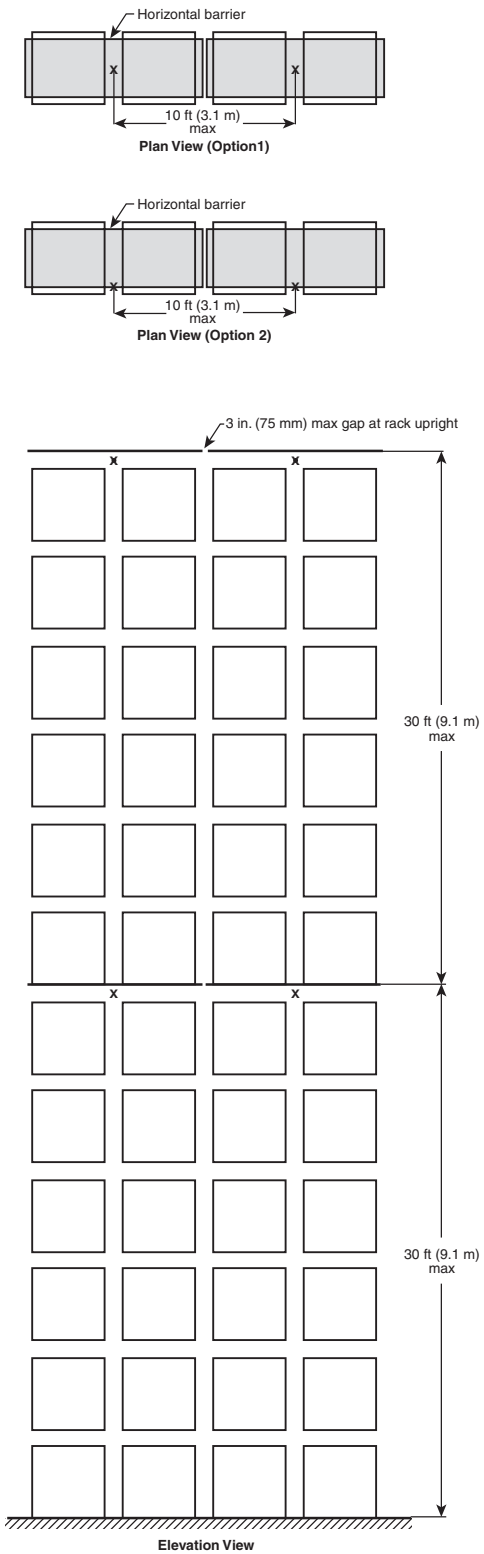

FIGURE 25.8.3.3.1(A)(a) *Alternative In-Rack Sprinkler Protection for Class I Through Class IV and Cartoned Group A Plastic Commodities in Single-Row Racks, Option 3.*

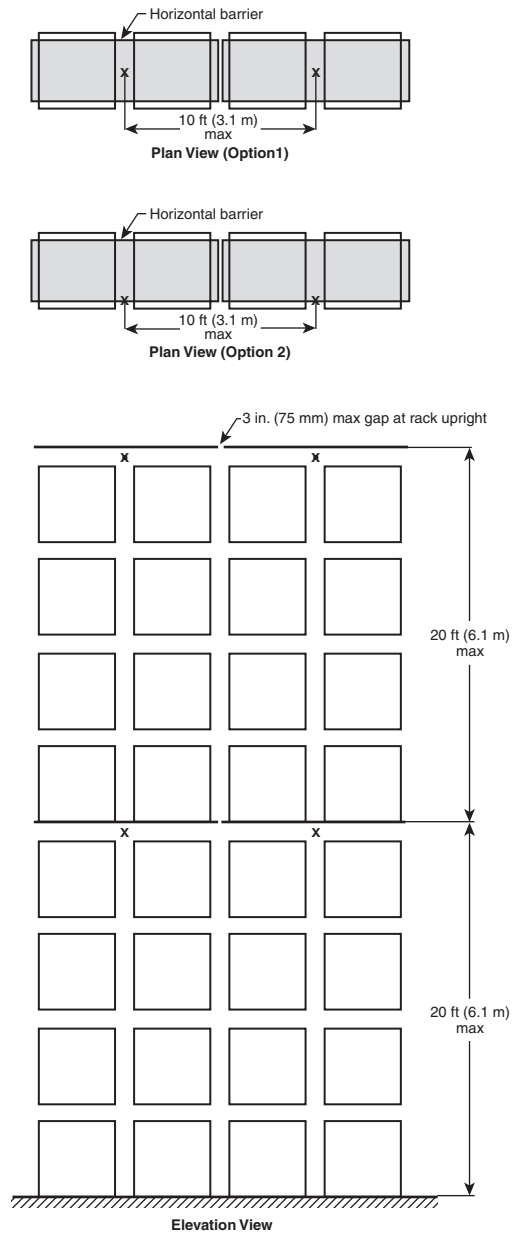

FIGURE 25.8.3.3.1(A)(b) *Alternative In-Rack Sprinkler Protection for Exposed Group A Plastic Commodities in Single-Row Racks, Option 3.*

EDUFIRE.IR

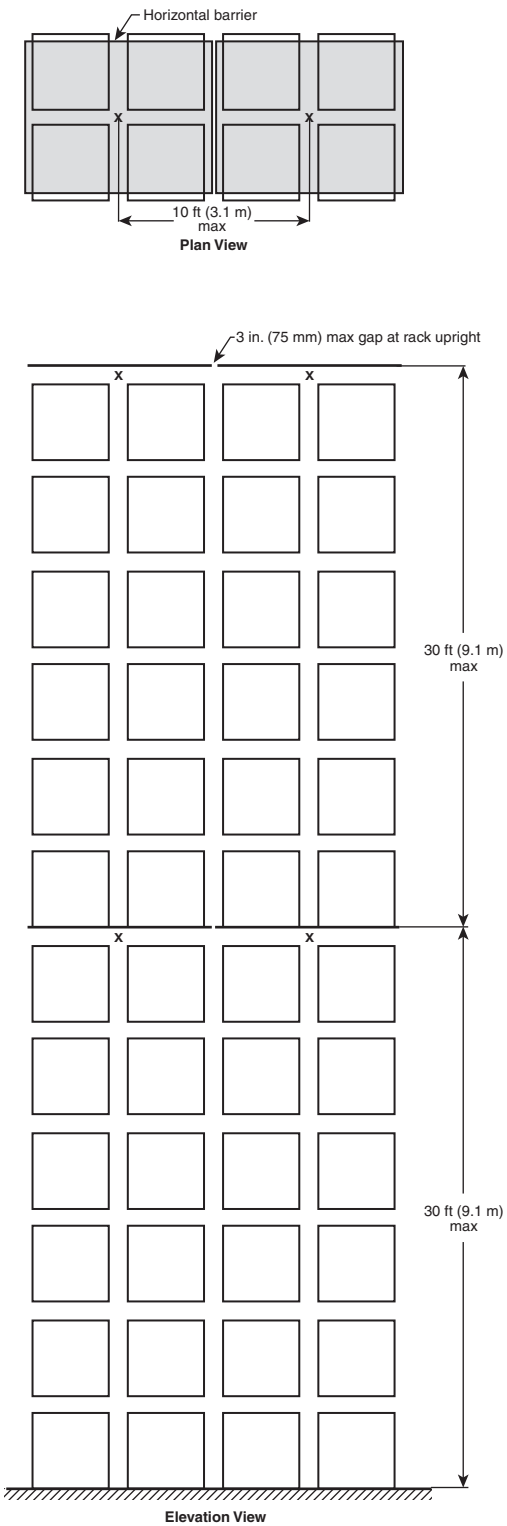

FIGURE 25.8.3.3.2(A)(a) Alternative In-Rack Sprinkler Protection for Class I Through Class IV and Cartoned Group A Plastic Commodities in Double-Row Racks, Option 3.

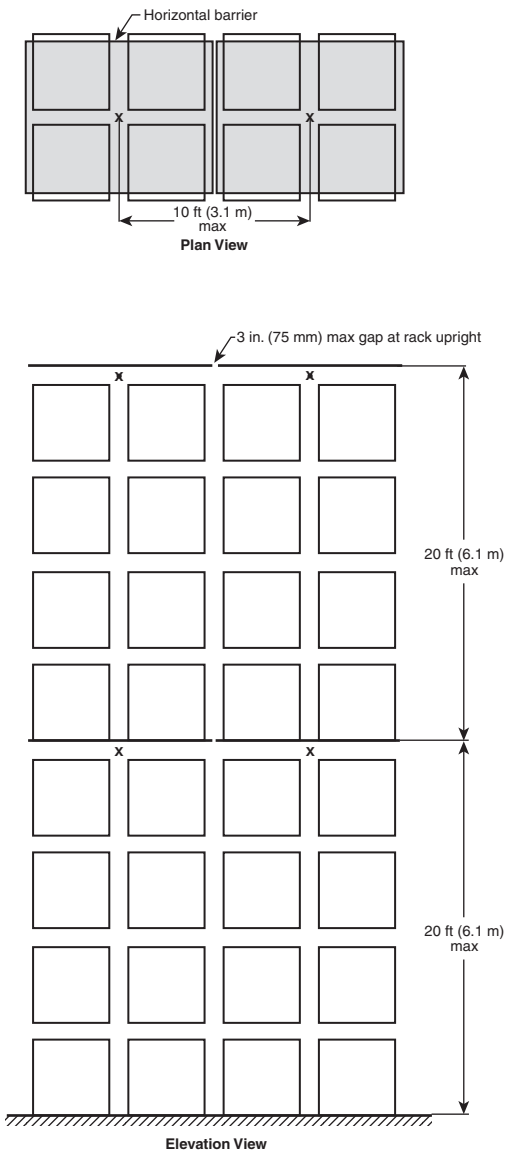

FIGURE 25.8.3.3.2(A)(b) Alternative In-Rack Sprinkler Protection for Exposed Group A Plastic Commodities in Double-Row Racks, Option 3.

EDUFIRE.IR

25.8.3.3.3 Multiple-Row Racks.

(A) For multiple-row racks with an overall depth between aisles not exceeding 15 ft 6 in. (4.7 m), an alternating sprinkler arrangement shall be installed within adjacent transverse flue spaces as shown in Figure 25.8.3.3.3(A)(a) for Class I through Class IV and cartoned Group A plastic commodity and Figure 25.8.3.3.3(A)(b) for exposed Group A plastic commodity.

(B) The maximum linear spacing between sprinklers at the face shall not exceed 10 ft (3.1 m) and shall not exceed 10 ft (3.1 m) between sprinklers at every other bay.

25.8.3.4 The design of the in-rack sprinkler system shall be based on a minimum flow of 138 gpm (520 L/min) from each of the four most remote sprinklers for single-row and double-row racks or each of the eight most remote in-rack sprinklers (three at each face and two in-between) for multiple-row racks.

25.8.3.5 The in-rack sprinkler demand shall not be required to be hydraulically balanced with the ceiling-level sprinkler system.

The allowance in 25.8.3.5, combined with that provided by 25.8.3.6, represents the most significant advantage for the use of the in-rack sprinkler arrangement allowed by 25.8.3. By not requiring the demands of the ceiling sprinklers and in-rack sprinklers to be balanced or added together, the full available water supply can be calculated for the in-rack sprinklers and the ceiling sprinklers separately. This allowance will provide an acceptable level of protection without affecting the overall demand for the ceiling sprinkler system.

25.8.3.6 Ceiling Sprinkler System. The ceiling-level sprinkler system shall be designed based on the highest commodity hazard not protected by the criteria prescribed by this section.

25.9 In-Rack Sprinkler Arrangements in Combination with CMDA Sprinklers at Ceiling Level.

Section 25.9, when used in combination with Section 25.2 and Sections 25.4 through 25.7, provides the necessary requirements for the horizontal and vertical installation of in-rack sprinklers in the presence of CMDA ceiling sprinklers as well as the ceiling sprinkler system design requirements. Section 25.9 is subdivided into six main sections.

The following list outlines the allowable ceiling designs as well as the allowable horizontal and vertical in-rack sprinkler arrangements for 25.9.1 through 25.9.4 and 25.9.6:

- *25.9.1: Rack storage of Class I through Class IV commodities up to and including 25 ft (7.6 m) in height.* The allowable ceiling designs are provided in 25.2.3.2, and the allowable in-rack sprinkler horizontal and vertical locations are provided in Sections 25.4 through 25.7.
- *25.9.2: Rack storage of Class I through Class IV commodities over 25 ft (7.6 m) in height.* The allowable ceiling designs are provided in 25.2.3., and the allowable in-rack sprinkler horizontal and vertical locations are provided in Figure 25.9.2.1.1(a) through Figure 25.9.2.1.1(e) for single-row racks, Figure 25.9.2.2.1(a) through Figure 25.9.2.2.1(j) for double-row racks, and Figure 25.9.2.3.1(a) through Figure 25.9.2.3.1(c) for multiple-row racks. Also see Sections 25.4 through 25.7 for additional requirements.
- *25.9.3: Rack storage of Group A plastic commodities up to and including 25 ft (7.6 m) in height.* The allowable ceiling designs as well as the allowable horizontal and vertical locations of in-rack sprinklers are provided in Figure 25.9.3.1(a) through Figure 25.9.3.1(e) for cartoned Group A plastics and in Figure 25.9.3.3(a) through Figure 25.9.3.3(k) for exposed nonexpanded Group A plastics.
- *25.9.4: Rack storage of Group A plastic commodities over 25 ft (7.6 m) in height.* Except for the protection of exposed nonexpanded Group A plastics in single-row racks, the allowable ceiling design for Group A plastics stored over 25 ft (7.5 m) in height are provided in 25.3.5. The allowable ceiling design for exposed nonexpanded Group A plastics in single-row racks is provided in 25.9.4.1.3.

EDUFIRE.IR

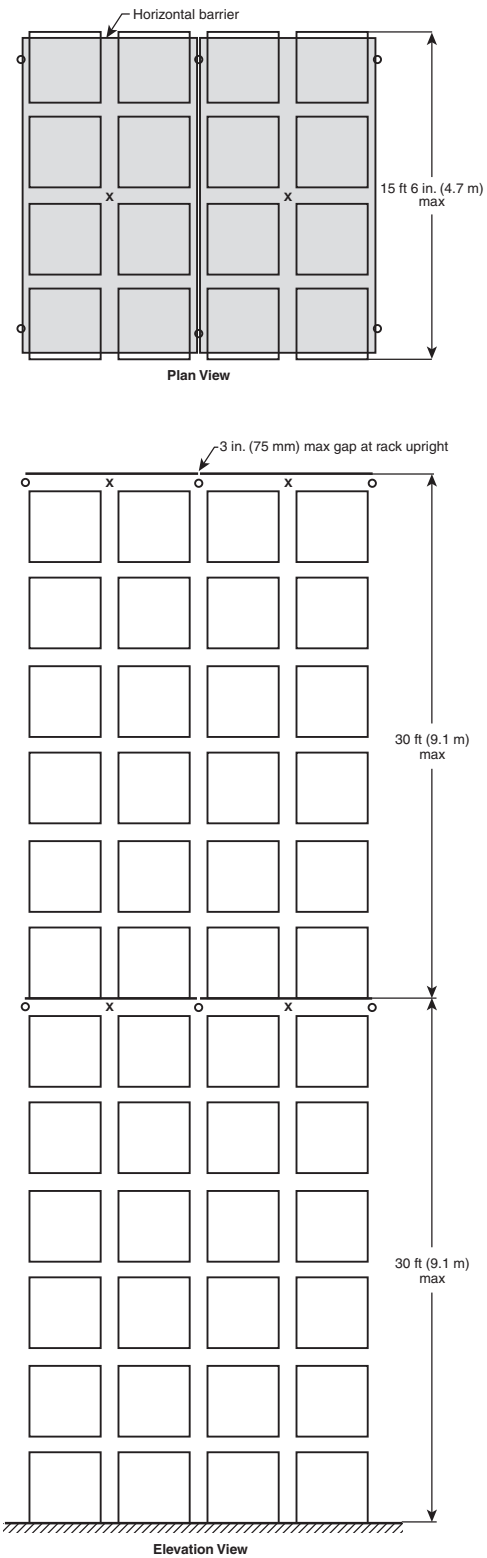

FIGURE 25.8.3.3.3(A)(a) *Alternative In-Rack Sprinkler Protection for Class I Through Class IV and Cartoned Group A Plastic Commodities in Multiple-Row Racks, Option 3.*

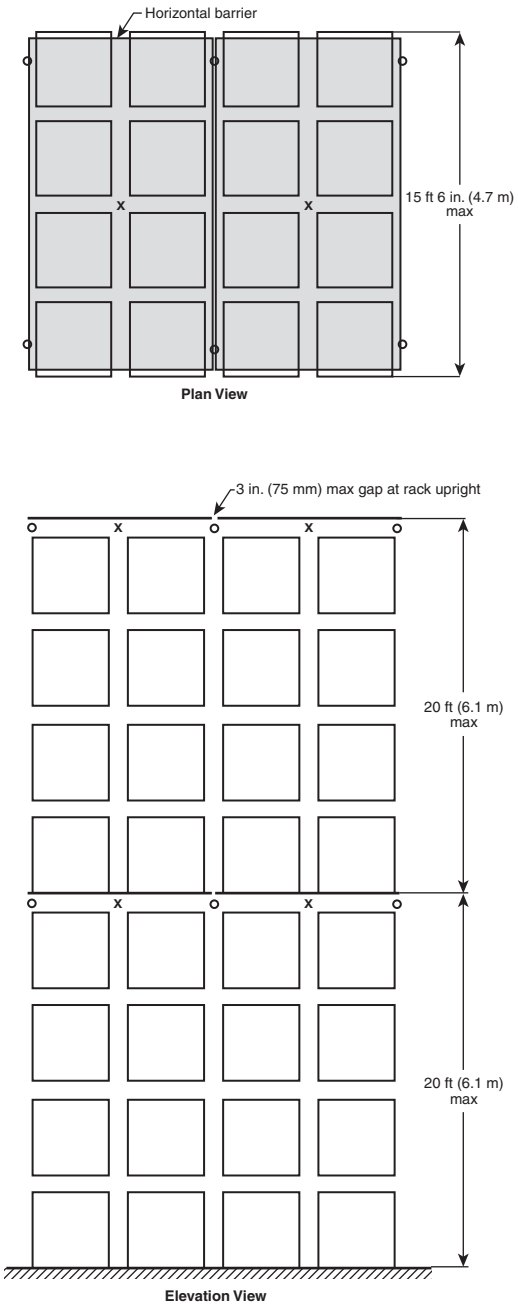

FIGURE 25.8.3.3.3(A)(b) *Alternative In-Rack Sprinkler Protection for Exposed Group A Plastic Commodities in Multiple-Row Racks, Option 3.*

EDUFIRE.IR

The allowable in-rack sprinkler horizontal and vertical locations are provided in Figure 25.9.4.1.1(a) through Figure 25.9.4.1.1(d) for single-row racks containing cartoned Group A plastics or Figure 25.9.4.1.3 for single-row racks containing exposed nonexpanded Group A plastics; Figure 25.9.4.2.1(a) through Figure 25.9.4.2.1(c) for double-row racks containing cartoned Group A plastics; and Figure 25.9.4.3.1(a) through Figure 25.9.4.3.1(f) for multiple-row racks containing exposed nonexpanded or cartoned Group A plastics. Also see Sections 25.4 through 25.7 for additional requirements.

- *25.9.6: Rack storage of rubber tires up to and including 20 ft (6.1 m) in height.* The allowable ceiling designs are provided in 25.2.3.6, and the allowable in-rack sprinkler horizontal and vertical locations are provided in Sections 25.4 through 25.7.
- See Section 25.8 for in-rack sprinkler arrangements that can be used for the protection of exposed expanded Group A plastics as well as exposed nonexpanded Group A plastics in double-row racks.

25.9.1 Rack Storage of Class I Through Class IV Commodities Up to and Including 25 ft (7.6 m) in Height. The in-rack arrangements for rack storage up to and including 25 ft (7.6 m) in height shall be in accordance with the guidelines outlined in Sections 25.4 through 25.7 as applicable.

For rack storage of Class I through Class IV commodities stored up to and including 25 ft (7.6 m) in height, see 25.2.3.2 to obtain the allowable ceiling designs and Sections 25.4 through 25.7 to obtain the allowable in-rack sprinkler horizontal and vertical locations.

25.9.2 Rack Storage of Class I Through Class IV Commodities Over 25 ft (7.6 m) in Height.

25.9.2.1 Single-Row Racks.

For rack storage of Class I through Class IV commodities stored over 25 ft (7.6 m) in height, see 25.2.3.3 to obtain the allowable ceiling designs. For the allowable in-rack sprinkler horizontal and vertical locations of single-row racks, see Figure 25.9.2.1.1(a) through Figure 25.9.2.1.1(e). Also see Sections 25.4 through 25.7 for additional requirements.

C.23 [25.9.2.1, 25.9.2.2, 25.9.2.3] The recommended use of ordinary temperature–rated sprinklers at ceiling for storage higher than 25 ft (7.6 m) was determined by the results of fire test data. A test with high temperature–rated sprinklers and 0.45 gpm/ft^2 (18.3 mm/min) density resulted in fire damage in the two top tiers just within acceptable limits, with three ceiling sprinklers operating. A test with 0.45 gpm/ft^2 (18.3 mm/min) density and ordinary temperature–rated sprinklers produced a dramatic reduction in fire damage with four ceiling sprinklers operating.

The four ordinary temperature-rated ceiling sprinklers operated before the first of the three high temperature–rated ceiling sprinklers. In both tests, two in-rack sprinklers at two levels operated at approximately the same time. The high temperature–rated sprinklers were at all times fighting a larger fire with less water than the ordinary temperature–rated ceiling sprinklers.

Tests 115 and 119 compare ceiling sprinkler density of 0.3 gpm/ft^2 (12.2 mm/min) with 0.45 gpm/ft^2 (18.3 mm/min). Damage patterns coupled with the number of boxes damaged in the main rack suggest that the increase in density produces improved control, particularly in the area above the top tier of in-rack sprinklers.

Tests 119 and 122 compare ceiling sprinkler temperature ratings of 286°F (141°C) and 165°F (74°C). A review of the number of boxes damaged and the firespread patterns indicates that the use of ordinary temperature–rated ceiling sprinklers on a rack configuration that incorporates in-rack sprinklers dramatically reduces the amount of firespread. Considering that in-rack sprinklers in the tests for storage over 25 ft (7.6 m) operated prior to ceiling sprinklers, it would seem that the installation of in-rack sprinklers converts an otherwise rapidly

EDUFIRE.IR

developing fire, from the standpoint of ceiling sprinklers, to a slower developing fire with a lower rate of heat release.

In the 20 ft (6.1 m) high test series, ceiling sprinklers operated before in-rack sprinklers. In the 30 ft (9.1 m) high series, ceiling sprinklers operated after in-rack sprinklers. The 50 ft (15 m) high test did not operate ceiling sprinklers. Ceiling sprinklers would, however, be needed if fire occurred in upper levels.

The results of these tests indicate the effect of in-rack sprinklers on storage higher than 25 ft (7.6 m). From the ceiling sprinkler operation standpoint, a fire with an expected high heat release rate was converted to a fire with a much lower heat release rate.

Since the fires developed slowly and opened sprinklers at two levels in the racks, only a few ceiling sprinklers were needed to establish control. Thus, the sprinkler operating area does not vary with height for storage over 25 ft (7.6 m) or for changes in sprinkler temperature rating and density.

All tests with sprinklers in racks were conducted using nominal ½ in. (15 mm) orifice size sprinklers of ordinary temperature.

See the commentary following 25.2.3.3.1.

25.9.2.1.1* In single-row racks with a maximum of 10 ft (3.0 m) between the top of storage and the ceiling, in-rack sprinklers shall be installed in accordance with Table 25.9.2.1.1 and Figure 25.9.2.1.1(a) through Figure 25.9.2.1.1(e).

Exhibit 25.12 through Exhibit 25.16 illustrate the application of the in-rack sprinkler placement requirements from Figure 25.9.2.1.1(a) through Figure 25.9.2.1.1(e), respectively.

TABLE 25.9.2.1.1 *Single-Row Racks of Class I Through Class IV Commodities Stored Over 25 ft (7.6 m) in Height with Aisles 4 ft (1.2 m) or More in Width Protected by CMDA Sprinklers at Ceiling Level*

Commodity Class	*In-Rack Sprinklers Approximate Vertical Spacing at Tier Nearest the Vertical Distance and Maximum Horizontal Spacing*[a, b]	*Figure*	*Maximum Storage Height*	*Stagger*
	Center of Rack[c, d]			
I, II, III	Vertical 20 ft (6.1 m), Horizontal 5 ft (1.5 m)	25.9.2.1.1(a)	Higher than 25 ft (7.6 m)	No
	Vertical 20 ft (6.1 m), Horizontal 10 ft (3.0 m) with horizontal barriers	25.9.2.1.1(b)		No
I, II, III, IV	Vertical 15 ft (4.6 m), Horizontal 5 ft (1.5 m)	25.9.2.1.1(c)		No
	Vertical 15 ft (4.6 m), Horizontal 10 ft (3.0 m) with horizontal barriers	25.9.2.1.1(d)		No
	Vertical 10 ft (3.0 m), Horizontal 10 ft (3.0 m)	25.9.2.1.1(e)		Yes

[a]Water shields required.

[b]All in-rack sprinkler spacing dimensions start from the floor.

[c]Install sprinklers at least 3 in. (75 mm) from uprights.

[d]In Figure 25.9.2.1.1(a) through Figure 25.9.2.1.1(e), each square represents a storage cube that measures 4 ft to 5 ft (1.2 m to 1.5 m) on a side. Actual load heights can vary from approximately 18 in. to 10 ft (450 mm to 3.0 m). Therefore, there can be one load to six or seven loads between in-rack sprinklers that are spaced 10 ft (3.0 m) apart vertically.

EDUFIRE.IR

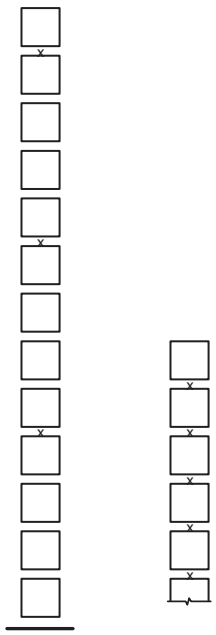

Note: Each square represents a storage cube measuring 4 ft to 5 ft (1.2 m to 1.5 m) on a side. Actual load heights can vary from approximately 18 in. (450 mm) up to 10 ft (3.0 m). Therefore, there could be as few as one load or as many as six or seven loads between in-rack sprinklers that are spaced 10 ft (3.0 m) apart vertically.

FIGURE 25.9.2.1.1(a) *In-Rack Sprinkler Arrangement, Class I, II, or III Commodities, Single-Row Racks, Storage Height Over 25 ft (7.6 m) — Option 1.*

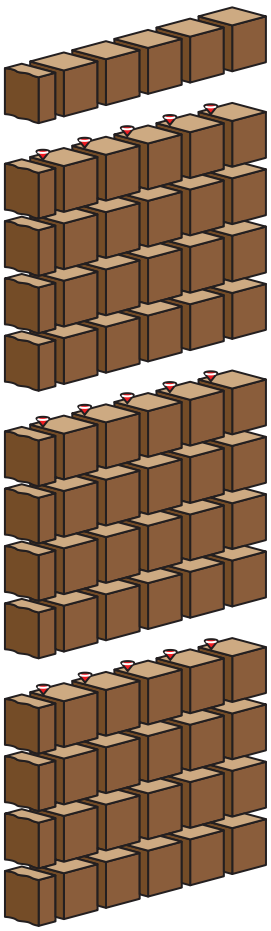

EXHIBIT 25.12 *Positioning of In-Rack Sprinklers in Accordance with Figure 25.9.2.1.1(a). (Courtesy Tyco Fire Products LP)*

A.25.9.2.1.1 In single-row racks with more than 10 ft (3.0 m) between the top of storage and the ceiling, a horizontal barrier should be installed above storage with one line of sprinklers under the barrier.

25.9.2.1.2 Where a single-row rack is located against a wall, the in-rack sprinkler arrangement shall be permitted to be in accordance with Figure 25.9.2.2.1(a) through Figure 25.9.2.2.1(j).

25.9.2.1.3 Where in-rack sprinkler arrangement figures for single-row racks show in-rack sprinklers in transverse flue spaces centered between the rack faces, it shall be permitted to position these in-rack sprinklers in the transverse flue at any point between the load faces.

25.9.2.2 Double-Row Racks.

For rack storage of Class I through Class IV commodities stored over 25 ft (7.6 m) in height, see 25.2.3.3 to obtain the allowable ceiling designs. For the allowable in-rack sprinkler horizontal and vertical locations of

EDUFIRE.IR

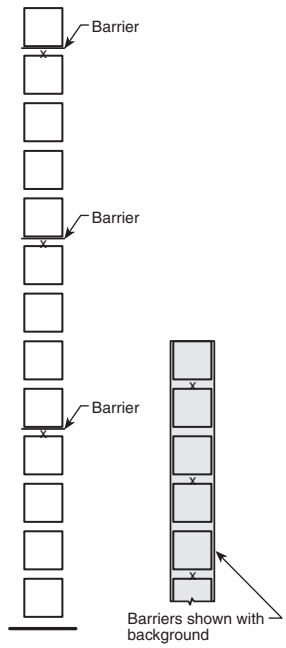

Note: Each square represents a storage cube measuring 4 ft to 5 ft (1.2 m to 1.5 m) on a side. Actual load heights can vary from approximately 18 in. (450 mm) up to 10 ft (3.0 m). Therefore, there could be as few as one load or as many as six or seven loads between in-rack sprinklers that are spaced 10 ft (3.0 m) apart vertically.

FIGURE 25.9.2.1.1(b) *In-Rack Sprinkler Arrangement, Class I, II, or III Commodities, Single-Row Racks, Storage Height Over 25 ft (7.6 m) — Option 2.*

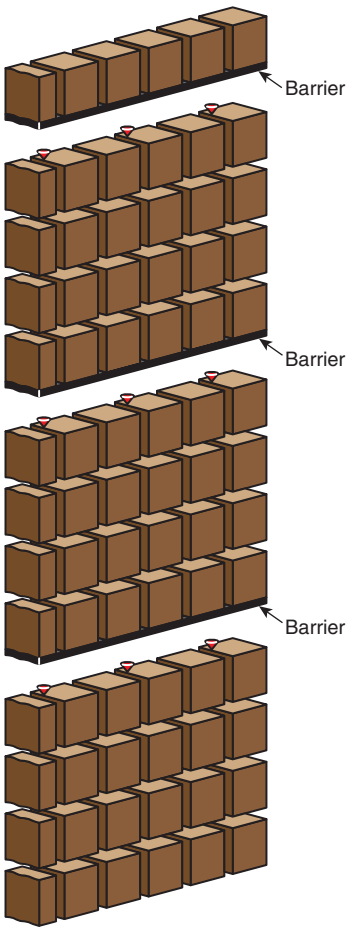

EXHIBIT 25.13 *Positioning of In-Rack Sprinklers in Accordance with Figure 25.9.2.1.1(b). (Courtesy Tyco Fire Products LP)*

double-row racks, see Figure 25.9.2.2.1(a) through Figure 25.9.2.2.1(j). Also see Sections 25.4 through 25.7 for additional requirements.

C.23 [25.9.2.1, 25.9.2.2, 25.9.2.3] The recommended use of ordinary temperature–rated sprinklers at ceiling for storage higher than 25 ft (7.6 m) was determined by the results of fire test data. A test with high temperature–rated sprinklers and 0.45 gpm/ft^2 (18.3 mm/min) density resulted in fire damage in the two top tiers just within acceptable limits, with three ceiling sprinklers operating. A test with 0.45 gpm/ft^2 (18.3 mm/min) density and ordinary temperature–rated sprinklers produced a dramatic reduction in fire damage with four ceiling sprinklers operating.

The four ordinary temperature-rated ceiling sprinklers operated before the first of the three high temperature–rated ceiling sprinklers. In both tests, two in-rack sprinklers at two levels operated at approximately the same time. The high temperature–rated sprinklers were

EDUFIRE.IR

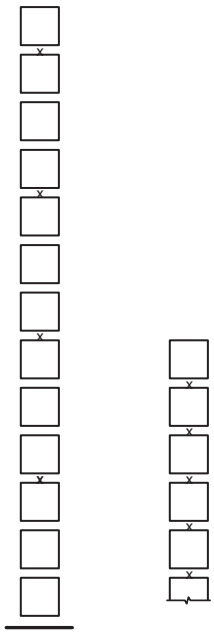

Note: Each square represents a storage cube measuring 4 ft to 5 ft (1.2 m to 1.5 m) on a side. Actual load heights can vary from approximately 18 in. (450 mm) up to 10 ft (3.0 m). Therefore, there could be as few as one load or as many as six or seven loads between in-rack sprinklers that are spaced 10 ft (3.0 m) apart vertically.

FIGURE 25.9.2.1.1(c) *In-Rack Sprinkler Arrangement, Class I, II, III, or IV Commodities, Single-Row Racks, Storage Height Over 25 ft (7.6 m) — Option 1.*

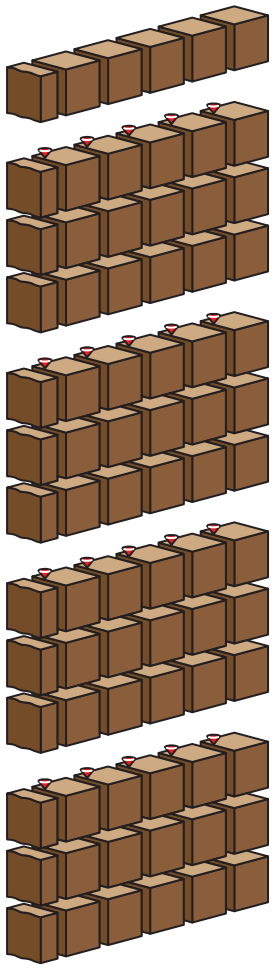

EXHIBIT 25.14 *Positioning of In-Rack Sprinklers in Accordance with Figure 25.9.2.1.1(c). (Courtesy Tyco Fire Products LP)*

at all times fighting a larger fire with less water than the ordinary temperature–rated ceiling sprinklers.

Tests 115 and 119 compare ceiling sprinkler density of 0.3 gpm/ft^2 (12.2 mm/min) with 0.45 gpm/ft^2 (18.3 mm/min). Damage patterns coupled with the number of boxes damaged in the main rack suggest that the increase in density produces improved control, particularly in the area above the top tier of in-rack sprinklers.

Tests 119 and 122 compare ceiling sprinkler temperature ratings of 286°F (141°C) and 165°F (74°C). A review of the number of boxes damaged and the firespread patterns indicates that the use of ordinary temperature–rated ceiling sprinklers on a rack configuration that incorporates in-rack sprinklers dramatically reduces the amount of firespread. Considering that in-rack sprinklers in the tests for storage over 25 ft (7.6 m) operated prior to ceiling sprinklers, it would seem that the installation of in-rack sprinklers converts an otherwise rapidly

EDUFIRE.IR

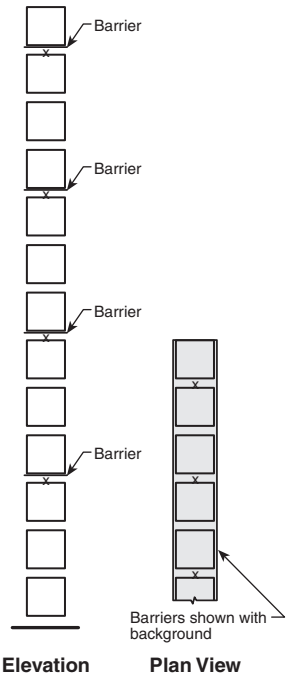

Note: Each square represents a storage cube measuring 4 ft to 5 ft (1.2 m to 1.5 m) on a side. Actual load heights can vary from approximately 18 in. (450 mm) up to 10 ft (3.0 m). Therefore, there could be as few as one load or as many as six or seven loads between in-rack sprinklers that are spaced 10 ft (3.0 m) apart vertically.

FIGURE 25.9.2.1.1(d) *In-Rack Sprinkler Arrangement, Class I, II, III, or IV Commodities, Single-Row Racks, Storage Height Over 25 ft (7.6 m) — Option 2.*

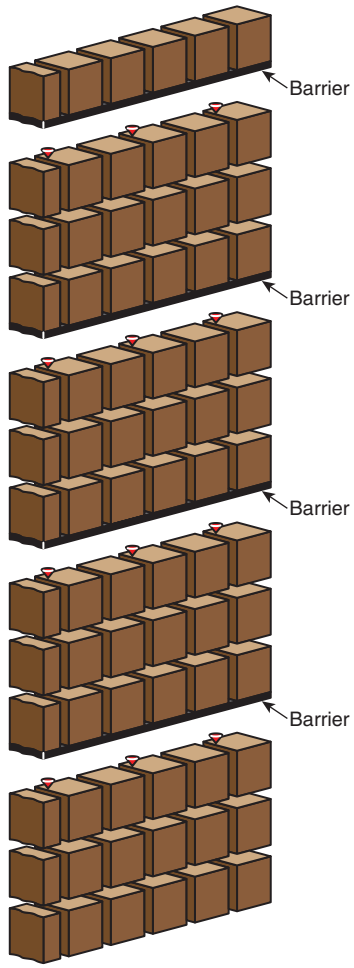

EXHIBIT 25.15 *Positioning of In-Rack Sprinklers in Accordance with Figure 25.9.2.1.1(d). (Courtesy Tyco Fire Products LP)*

developing fire, from the standpoint of ceiling sprinklers, to a slower developing fire with a lower rate of heat release.

In the 20 ft (6.1 m) high test series, ceiling sprinklers operated before in-rack sprinklers. In the 30 ft (9.1 m) high series, ceiling sprinklers operated after in-rack sprinklers. The 50 ft (15 m) high test did not operate ceiling sprinklers. Ceiling sprinklers would, however, be needed if fire occurred in upper levels.

The results of these tests indicate the effect of in-rack sprinklers on storage higher than 25 ft (7.6 m). From the ceiling sprinkler operation standpoint, a fire with an expected high heat release rate was converted to a fire with a much lower heat release rate.

Since the fires developed slowly and opened sprinklers at two levels in the racks, only a few ceiling sprinklers were needed to establish control. Thus, the sprinkler operating area does not vary with height for storage over 25 ft (7.6 m) or for changes in sprinkler temperature rating and density.

EDUFIRE.IR

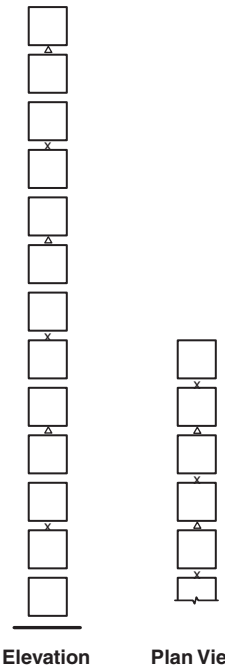

Notes:
1. For all storage heights, sprinklers shall be installed in every other tier and staggered as indicated.
2. Symbol Δ or x indicates sprinklers on vertical or horizontal stagger.
3. Each square represents a storage cube measuring 4 ft to 5 ft (1.2 m to 1.5 m) on a side. Actual load heights can vary from approximately 18 in. (450 mm) up to 10 ft (3.0 m). Therefore, there could be as few as one load or as many as six or seven loads between in-rack sprinklers that are spaced 10 ft (3.0 m) apart vertically.

FIGURE 25.9.2.1.1(e) *In-Rack Sprinkler Arrangement, Class I, II, III, or IV Commodities, Single-Row Racks, Storage Height Over 25 ft (7.6 m) — Option 3.*

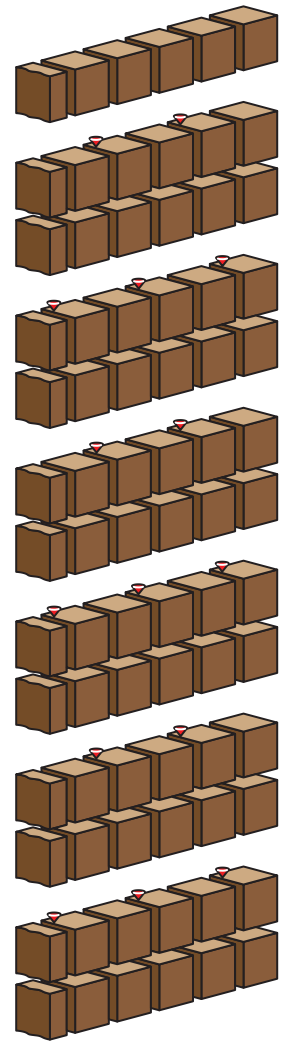

EXHIBIT 25.16 *Positioning of In-Rack Sprinklers in Accordance with Figure 25.9.2.1.1(e). (Courtesy Tyco Fire Products LP)*

All tests with sprinklers in racks were conducted using nominal ½ in. (15 mm) orifice size sprinklers of ordinary temperature.

See the commentary following 25.2.3.3.1.

25.9.2.2.1* In double-row racks with a maximum of 10 ft (3.0 m) between the top of storage and the ceiling, in-rack sprinklers shall be installed in accordance with Table 25.9.2.2.1 and Figure 25.9.2.2.1(a) through Figure 25.9.2.2.1(j).

Exhibit 25.17 through Exhibit 25.26 illustrate the application of the in-rack sprinkler placement requirements from Figure 25.9.2.2.1(a) through Figure 25.9.2.2.1(j), respectively.

EDUFIRE.IR

TABLE 25.9.2.2.1 *Double-Row Racks of Class I Through Class IV Commodities Stored Over 25 ft (7.6 m) in Height with Aisles 4 ft (1.2 m) or More in Width Protected by CMDA Sprinklers at Ceiling Level*

Commodity Class	In-Rack Sprinklers Approximate Vertical Spacing at Tier Nearest the Vertical Distance and Maximum Horizontal Spacing[a,b]		Figure	Maximum Storage Height	Stagger
	Longitudinal Flue[c]	Face[d,e]			
I	Vertical 20 ft (6.1 m), Horizontal 10 ft (3.0 m) under horizontal barriers	None	25.9.2.2.1(a)	30 ft (9.1 m)	No
	Vertical 20 ft (6.1 m), Horizontal 10 ft (3.0 m)	Vertical 20 ft (6.1 m), Horizontal 10 ft (3.0 m)	25.9.2.2.1(b)	Higher than 25 ft (7.6 m)	Yes
I, II, III	Vertical at 10 ft (3.0 m) or at 15 ft (4.6 m) and at 25 ft (7.6 m)	None	25.9.2.2.1(c)	30 ft (9.1 m)	Yes
	Vertical 10 ft (3.0 m), Horizontal 10 ft (3.0 m)	Vertical 30 ft (9.1 m), Horizontal 10 ft (3.0 m)	25.9.2.2.1(d)	Higher than 25 ft (7.6 m)	Yes
	Vertical 20 ft (6.1 m), Horizontal 10 ft (3.0 m)	Vertical 20 ft (6.1 m), Horizontal 5 ft (1.5 m)	25.9.2.2.1(e)		Yes
	Vertical 25 ft (7.6 m), Horizontal 5 ft (1.5 m)	Vertical 25 ft (7.6 m), Horizontal 5 ft (1.5 m)	25.9.2.2.1(f)		No
	Vertical 20 ft (6.1 m), Horizontal 10 ft (3.0 m) under horizontal barriers with two lines of staggered in-rack sprinklers		25.9.2.2.1(g)		Yes
I, II, III, IV	Vertical 15 ft (4.6 m), Horizontal 10 ft (3.0 m)	Vertical 20 ft (6.1 m), Horizontal 10 ft (3.0 m)	25.9.2.2.1(h)		Yes
	Vertical 20 ft (6.1 m), Horizontal 5 ft (1.5 m)	Vertical 20 ft (6.1 m), Horizontal 5 ft (1.5 m)	25.9.2.2.1(i)		No
	Vertical 15 ft (4.6 m), Horizontal 10 ft (3.0 m) under horizontal barriers with two lines of staggered in-rack sprinklers		25.9.2.2.1(j)		Yes

[a]Water shields required.

[b]All in-rack sprinkler spacing dimensions start from the floor.

[c]Install sprinklers at least 3 in. (75 mm) from uprights.

[d]Face sprinklers shall not be required for a Class I commodity consisting of noncombustible products on wood pallets (without combustible containers), except for arrays shown in Figure 25.9.2.2.1(g) and Figure 25.9.2.2.1(j).

[e]In Figure 25.9.2.2.1(a) through Figure 25.9.2.2.1(j), each square represents a storage cube that measures 4 ft to 5 ft (1.2 m to 1.5 m) on a side. Actual load heights can vary from approximately 18 in. to 10 ft (450 mm to 3.0 m). Therefore, there can be one load to six or seven loads between in-rack sprinklers that are spaced 10 ft (3.0 m) apart vertically.

EDUFIRE.IR

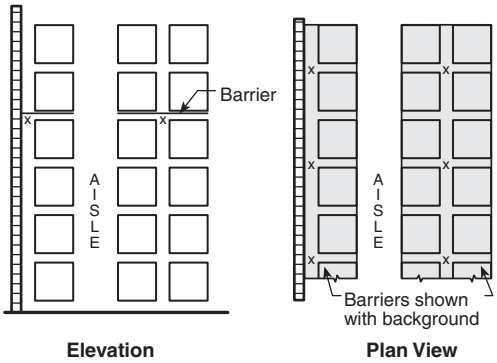

Notes:
1. Symbol x indicates in-rack sprinklers.
2. Each square represents a storage cube measuring 4 ft to 5 ft (1.2 m to 1.5 m) on a side. Actual load heights can vary from approximately 18 in. (450 mm) up to 10 ft (3.0 m). Therefore, there could be as few as one load or as many as six or seven loads between in-rack sprinklers that are spaced 10 ft (3.0 m) apart vertically.

FIGURE 25.9.2.2.1(a) *In-Rack Sprinkler Arrangement, Class I Commodities, Storage Height 25 ft to Maximum 30 ft (7.6 m to Maximum 9.1 m).*

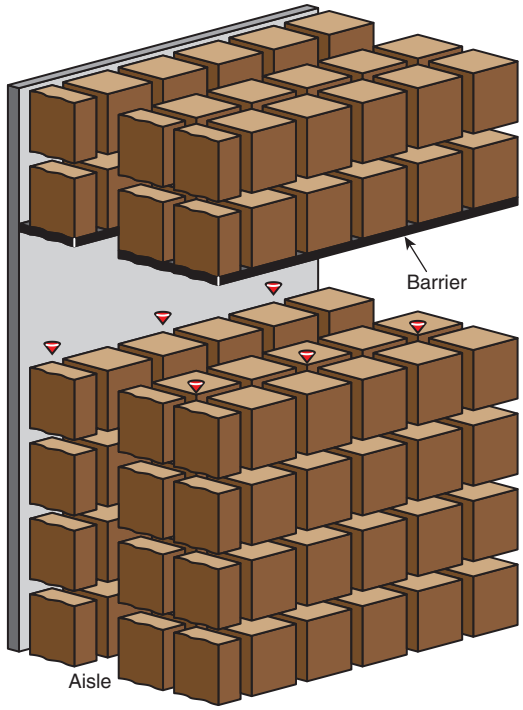

EXHIBIT 25.17 *Positioning of In-Rack Sprinklers in Accordance with Figure 25.9.2.2.1(a). (Courtesy Tyco Fire Products LP)*

A.25.9.2.2.1 In double-row racks with more than 10 ft (3.0 m) between the top of storage and the ceiling, a horizontal barrier should be installed above storage with one line of sprinklers under the barrier.

Where storage tiers are not the same size on each side of the longitudinal flue, one side of the flue should be protected with sprinklers at the proper elevation above the load. The next level of sprinklers should protect the other side of the flue with the sprinklers at the proper elevation above that load as indicated in Figure A.25.9.2.2.1. The vertical spacing requirements for in-rack sprinklers specified in Table 25.9.2.2.1 and Section 25.4 for Group A plastic commodities should be followed.

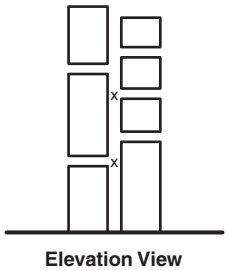

FIGURE A.25.9.2.2.1 *Placement of In-Rack Sprinklers Where Rack Levels Have Varying Heights.*

EDUFIRE.IR

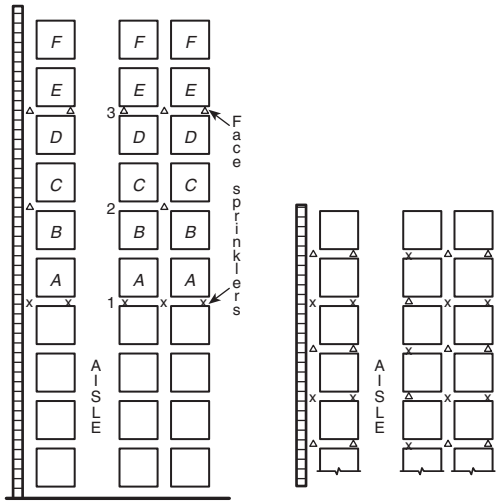

Notes:
1. Sprinklers labeled 1 (the selected array from Table 25.9.2.2.1) shall be required where loads labeled *A* or *B* represent top of storage.
2. Sprinklers labeled 1 and 2 shall be required where loads labeled *C* or *D* represent top of storage.
3. Sprinklers labeled 1 and 3 shall be required where loads labeled *E* or *F* represent top of storage.
4. For storage higher than represented by loads labeled *F*, the cycle defined by Notes 2 and 3 is repeated, with stagger as indicated.
5. Symbol Δ or x indicates sprinklers on vertical or horizontal stagger.
6. Each square represents a storage cube measuring 4 ft to 5 ft (1.2 m to 1.5 m) on a side. Actual load heights can vary from approximately 18 in. (450 mm) up to 10 ft (3.0 m). Therefore, there could be as few as one load or as many as six or seven loads between in-rack sprinklers that are spaced 10 ft (3.0 m) apart vertically.

FIGURE 25.9.2.2.1(b) *In-Rack Sprinkler Arrangement, Class I Commodities, Storage Height Over 25 ft (7.6 m).*

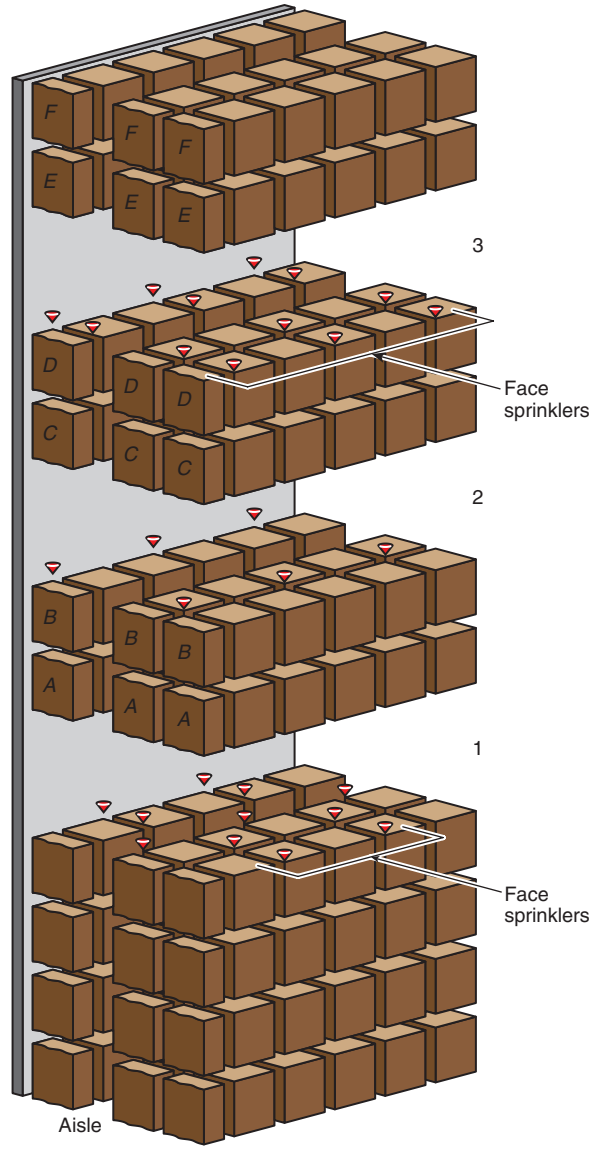

EXHIBIT 25.18 *Positioning of In-Rack Sprinklers in Accordance with Figure 25.9.2.2.1(b). (Courtesy Tyco Fire Products LP)*

25.9.2.3 Multiple-Row Racks.

For rack storage of Class I through Class IV commodities stored over 25 ft (7.6 m) in height, see 25.2.3.3 to obtain the allowable ceiling designs. For the allowable in-rack sprinkler horizontal and vertical locations of multiple-row racks, see Figure 25.9.2.3.1(a) through Figure 25.9.2.3.1(c). Also see Sections 25.4 through 25.7 for additional requirements.

EDUFIRE.IR

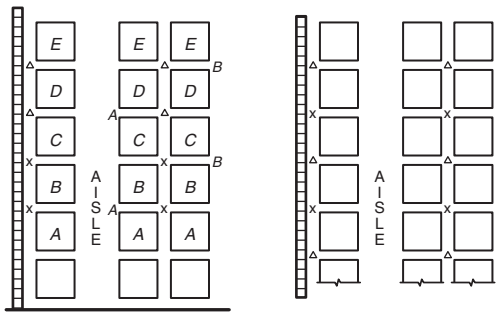

Notes:
1. Alternate location of in-rack sprinklers. Sprinklers shall be permitted to be installed above loads *A* and *C* or above loads *B* and *D*.
2. Symbol Δ or x indicates sprinklers on vertical or horizontal stagger.
3. Each square represents a storage cube measuring 4 ft to 5 ft (1.2 m to 1.5 m) on a side. Actual load heights can vary from approximately 18 in. (450 mm) up to 10 ft (3.0 m). Therefore, there could be as few as one load or as many as six or seven loads between in-rack sprinklers that are spaced 10 ft (3.0 m) apart vertically.

FIGURE 25.9.2.2.1(c) *In-Rack Sprinkler Arrangement, Class I, II, or III Commodities, Storage Height 25 ft to Maximum 30 ft (7.6 m to Maximum 9.1 m).*

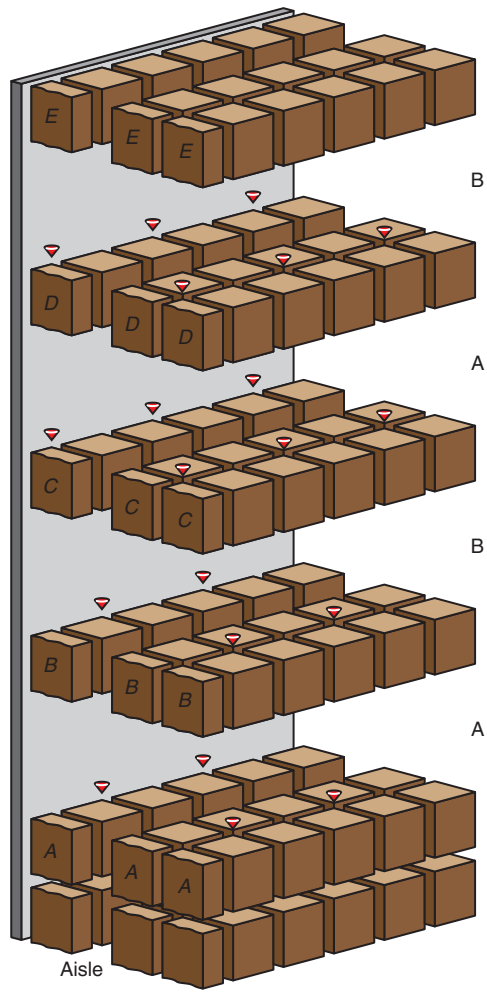

EXHIBIT 25.19 *Positioning of In-Rack Sprinklers in Accordance with Figure 25.9.2.2.1(c). (Courtesy Tyco Fire Products LP)*

C.23 [25.9.2.1, 25.9.2.2, 25.9.2.3] The recommended use of ordinary temperature–rated sprinklers at ceiling for storage higher than 25 ft (7.6 m) was determined by the results of fire test data. A test with high temperature–rated sprinklers and 0.45 gpm/ft^2 (18.3 mm/min) density resulted in fire damage in the two top tiers just within acceptable limits, with three ceiling sprinklers operating. A test with 0.45 gpm/ft^2 (18.3 mm/min) density and ordinary temperature–rated sprinklers produced a dramatic reduction in fire damage with four ceiling sprinklers operating.

The four ordinary temperature-rated ceiling sprinklers operated before the first of the three high temperature–rated ceiling sprinklers. In both tests, two in-rack sprinklers at two levels operated at approximately the same time. The high temperature–rated sprinklers were at all times fighting a larger fire with less water than the ordinary temperature–rated ceiling sprinklers.

EDUFIRE.IR

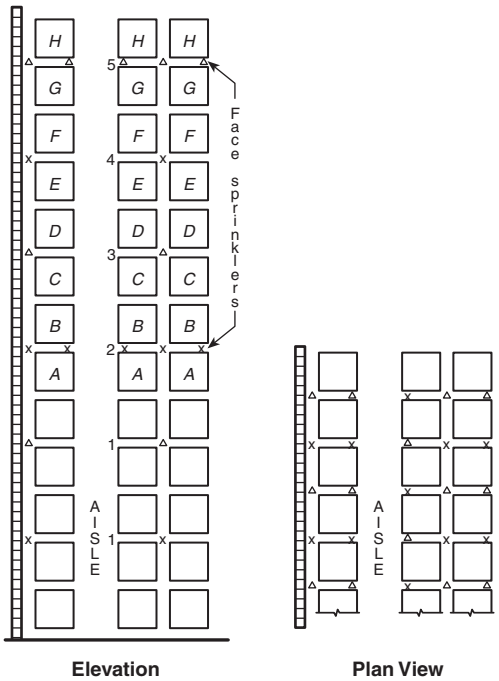

Notes:
1. Sprinklers labeled 1 shall be required where loads labeled *A* represent the top of storage.
2. Sprinklers labeled 1 and 2 shall be required where loads labeled *B* or *C* represent top of storage.
3. Sprinklers labeled 1, 2, and 3 shall be required where loads labeled *D* or *E* represent top of storage.
4. Sprinklers labeled 1, 2, 3, and 4 shall be required where loads labeled *F* or *G* represent top of storage.
5. Sprinklers labeled 1, 2, 3, 4, and 5 shall be required where loads labeled *H* represent top of storage.
6. For storage higher than represented by loads labeled *H*, the cycle defined by Notes 3, 4, and 5 is repeated with stagger as indicated.
7. The indicated face sprinklers shall be permitted to be omitted where commodity consists of unwrapped or unpackaged metal parts on wood pallets.
8. Symbol Δ or x indicates sprinklers on vertical or horizontal stagger.
9. Each square represents a storage cube measuring 4 ft to 5 ft (1.2 m to 1.5 m) on a side. Actual load heights can vary from approximately 18 in. (450 mm) up to 10 ft (3.0 m). Therefore, there could be as few as one load or as many as six or seven loads between in-rack sprinklers that are spaced 10 ft (3.0 m) apart vertically.

FIGURE 25.9.2.2.1(d) *In-Rack Sprinkler Arrangement, Class I, II, or III Commodities, Storage Height Over 25 ft (7.6 m) — Option 1.*

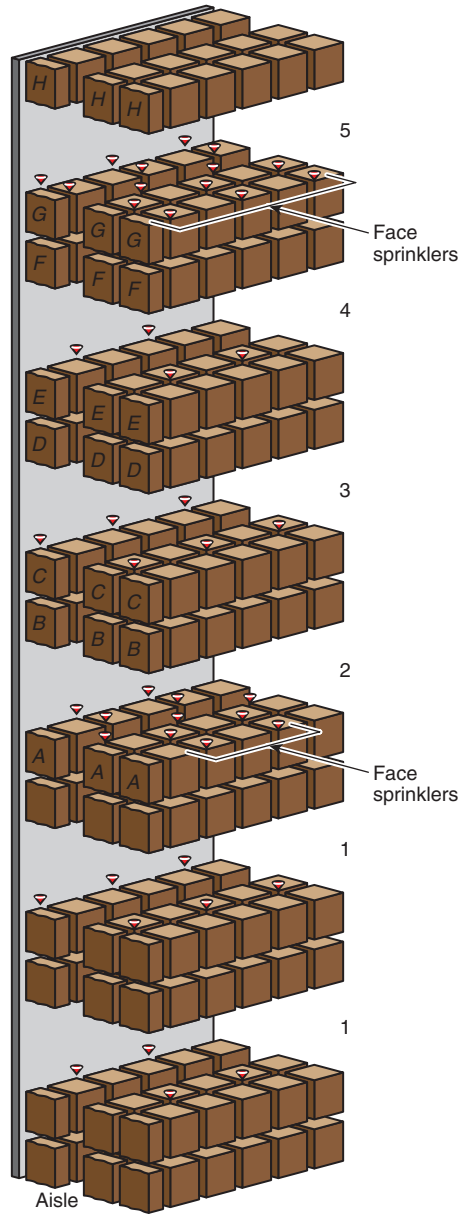

EXHIBIT 25.20 *Positioning of In-Rack Sprinklers in Accordance with Figure 25.9.2.2.1(d). (Courtesy Tyco Fire Products LP)*

Tests 115 and 119 compare ceiling sprinkler density of 0.3 gpm/ft^2 (12.2 mm/min) with 0.45 gpm/ft^2 (18.3 mm/min). Damage patterns coupled with the number of boxes damaged in the main rack suggest that the increase in density produces improved control, particularly in the area above the top tier of in-rack sprinklers.

EDUFIRE.IR

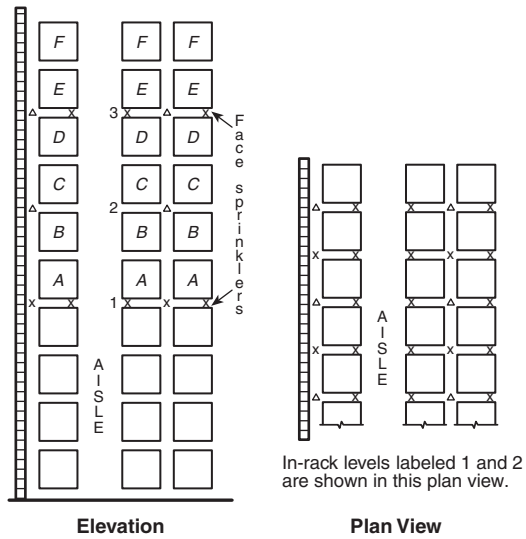

Notes:
1. Sprinklers labeled 1 (the selected array from Table 25.9.2.2.1) shall be required where loads labeled *A* or *B* represent top of storage.
2. Sprinklers labeled 1 and 2 shall be required where loads labeled *C* or *D* represent top of storage.
3. Sprinklers labeled 1 and 3 shall be required where loads labeled *E* or *F* represent top of storage.
4. For storage higher than represented by loads labeled *F*, the cycle defined by Notes 2 and 3 is repeated, with stagger as indicated.
5. Symbol Δ or x indicates sprinklers on vertical or horizontal stagger.
6. Each square represents a storage cube measuring 4 ft to 5 ft (1.2 m to 1.5 m) on a side. Actual load heights can vary from approximately 18 in. (450 mm) up to 10 ft (3.0 m). Therefore, there could be as few as one load or as many as six or seven loads between in-rack sprinklers that are spaced 10 ft (3.0 m) apart vertically.

FIGURE 25.9.2.2.1(e) *In-Rack Sprinkler Arrangement, Class I, II, or III Commodities, Storage Height Over 25 ft (7.6 m) — Option 2.*

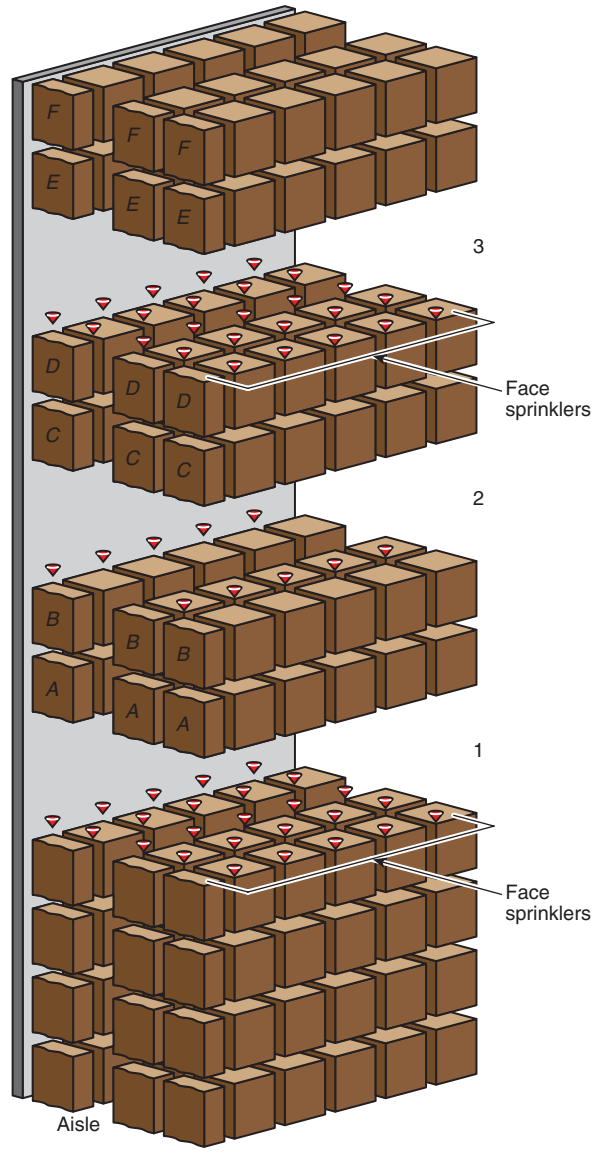

EXHIBIT 25.21 *Positioning of In-Rack Sprinklers in Accordance with Figure 25.9.2.2.1(e). (Courtesy Tyco Fire Products LP)*

Tests 119 and 122 compare ceiling sprinkler temperature ratings of 286°F (141°C) and 165°F (74°C). A review of the number of boxes damaged and the firespread patterns indicates that the use of ordinary temperature–rated ceiling sprinklers on a rack configuration that incorporates in-rack sprinklers dramatically reduces the amount of firespread. Considering that in-rack sprinklers in the tests for storage over 25 ft (7.6 m) operated prior to ceiling sprinklers, it would seem that the installation of in-rack sprinklers converts an otherwise rapidly developing fire, from the standpoint of ceiling sprinklers, to a slower developing fire with a lower rate of heat release.

EDUFIRE.IR

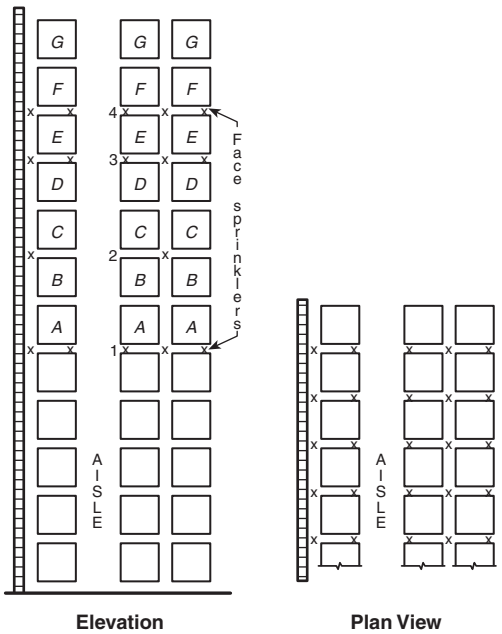

Notes:
1. Sprinklers labeled 1 (the selected array from Table 25.9.2.2.1) shall be required where loads labeled *A* or *B* represent top of storage.
2. Sprinklers labeled 1 and 2 shall be required where loads labeled *C* or *D* represent top of storage.
3. Sprinklers labeled 1 and 3 shall be required where loads labeled *E* represent top of storage.
4. Sprinklers labeled 1 and 4 shall be required where loads labeled *F* or *G* represent top of storage.
5. For storage higher than represented by loads labeled *G*, the cycle defined by Notes 2, 3, and 4 is repeated.
6. Symbol x indicates face and in-rack sprinklers.
7. Each square represents a storage cube measuring 4 ft to 5 ft (1.2 m to 1.5 m) on a side. Actual load heights can vary from approximately 18 in. (450 mm) up to 10 ft (3.0 m). Therefore, there could be as few as one load or as many as six or seven loads between in-rack sprinklers that are spaced 10 ft (3.0 m) apart vertically.

FIGURE 25.9.2.2.1(f) *In-Rack Sprinkler Arrangement, Class I, II, or III Commodities, Storage Height Over 25 ft (7.6 m) — Option 3.*

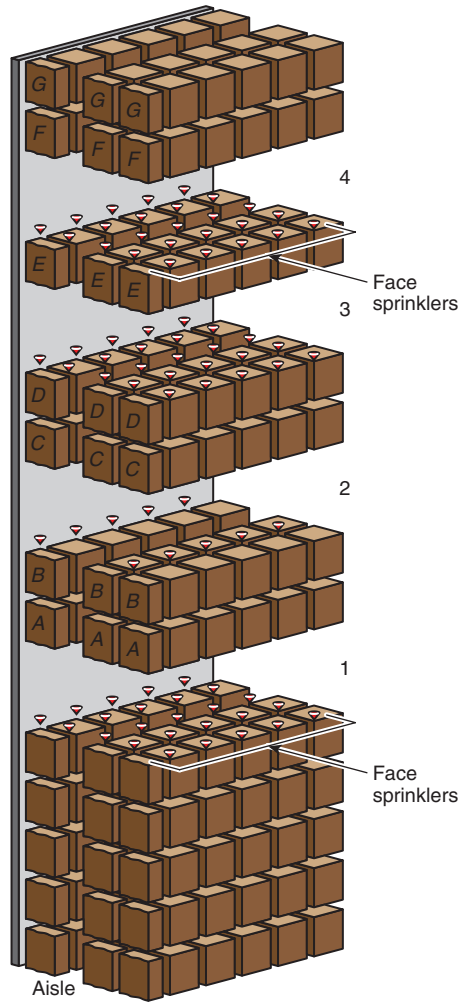

EXHIBIT 25.22 *Positioning of In-Rack Sprinklers in Accordance with Figure 25.9.2.2.1(f). (Courtesy Tyco Fire Products LP)*

In the 20 ft (6.1 m) high test series, ceiling sprinklers operated before in-rack sprinklers. In the 30 ft (9.1 m) high series, ceiling sprinklers operated after in-rack sprinklers. The 50 ft (15 m) high test did not operate ceiling sprinklers. Ceiling sprinklers would, however, be needed if fire occurred in upper levels.

The results of these tests indicate the effect of in-rack sprinklers on storage higher than 25 ft (7.6 m). From the ceiling sprinkler operation standpoint, a fire with an expected high heat release rate was converted to a fire with a much lower heat release rate.

Since the fires developed slowly and opened sprinklers at two levels in the racks, only a few ceiling sprinklers were needed to establish control. Thus, the sprinkler operating area does not vary with height for storage over 25 ft (7.6 m) or for changes in sprinkler temperature rating and density.

EDUFIRE.IR

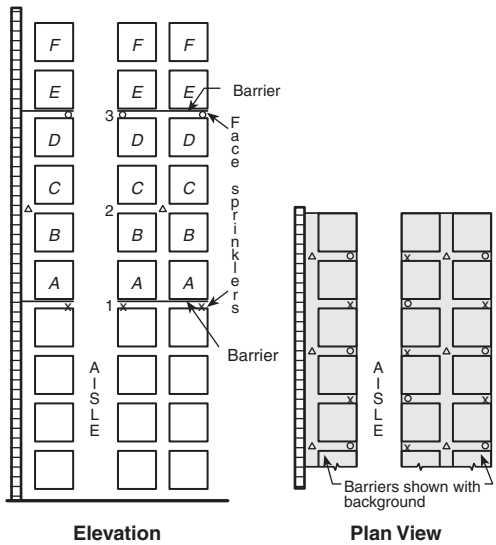

Notes:

1. Sprinklers labeled 1 (the selected array from Table 25.9.2.2.1) shall be required where loads labeled *A* or *B* represent top of storage.
2. Sprinklers labeled 1 and 2 shall be required where loads labeled *C* or *D* represent top of storage.
3. Sprinklers labeled 1 and 3 shall be required where loads labeled *E* or *F* represent top of storage.
4. For storage higher than represented by loads labeled *F*, the cycle defined by Notes 2 and 3 is repeated.
5. Symbols o, Δ, and x indicate sprinklers on vertical or horizontal stagger.
6. Each square represents a storage cube measuring 4 ft to 5 ft (1.2 m to 1.5 m) on a side. Actual load heights can vary from approximately 18 in. (450 mm) up to 10 ft (3.0 m). Therefore, there could be as few as one load or as many as six or seven loads between in-rack sprinklers that are spaced 10 ft (3.0 m) apart vertically.

FIGURE 25.9.2.2.1(g) *In-Rack Sprinkler Arrangement, Class I, II, or III Commodities, Storage Height Over 25 ft (7.6 m) — Option 4.*

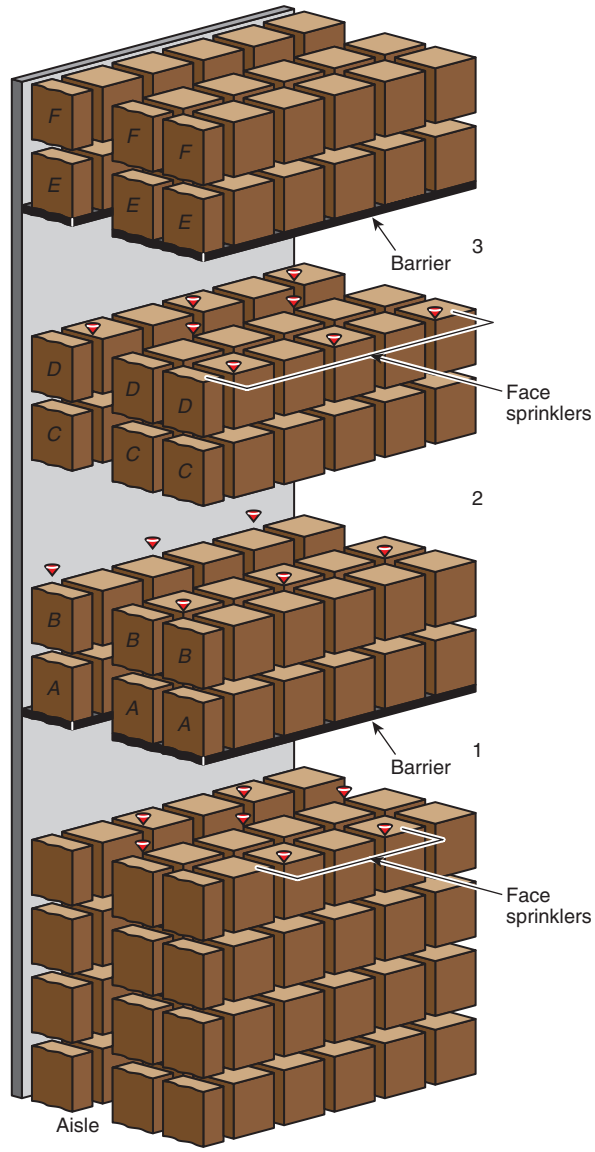

EXHIBIT 25.23 *Positioning of In-Rack Sprinklers in Accordance with Figure 25.9.2.2.1(g). (Courtesy Tyco Fire Products LP)*

All tests with sprinklers in racks were conducted using nominal ½ in. (15 mm) orifice size sprinklers of ordinary temperature.

See the commentary following 25.2.3.3.1.

EDUFIRE.IR

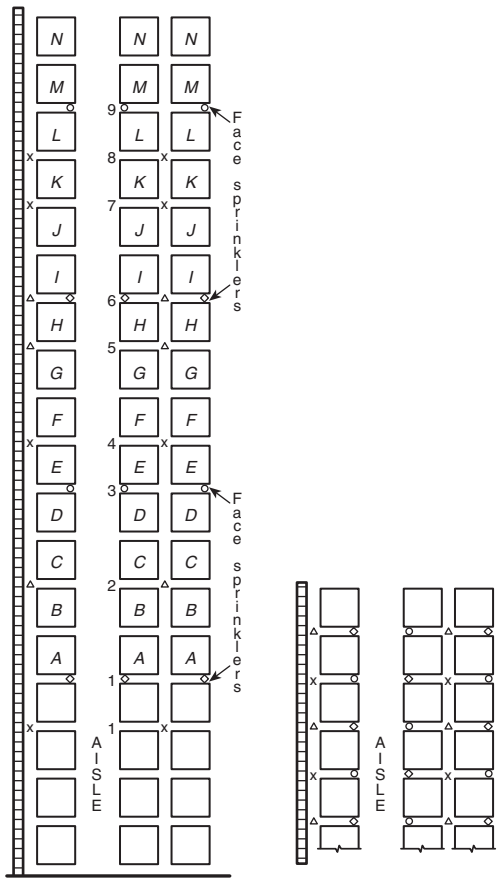

Elevation **Plan View**

Notes:

1. Sprinklers labeled 1 (the selected array from Table 25.9.2.2.1) shall be required where loads labeled *A* or *B* represent top of storage.
2. Sprinklers labeled 1 and 2 shall be required where loads labeled *C* or *D* represent top of storage.
3. Sprinklers labeled 1, 2, and 3 shall be required where loads labeled *E* or *F* represent top of storage.
4. Sprinklers labeled 1, 2, 3, and 4 shall be required where loads labeled *G* represent top of storage.
5. Sprinklers labeled 1, 2, 3, 4, and 5 shall be required where loads labeled *H* represent top of storage.
6. Sprinklers labeled 1, 2, 3, 4, and 6 (not 5) shall be required where loads labeled *I* or *J* represent top of storage.
7. Sprinklers labeled 1, 2, 3, 4, 6, and 7 shall be required where loads labeled *K* represent top of storage.
8. Sprinklers labeled 1, 2, 3, 4, 6, and 8 shall be required where loads labeled *L* represent top of storage.
9. Sprinklers labeled 1, 2, 3, 4, 6, 8, and 9 shall be required where loads labeled *M* or *N* represent top of storage.
10. For storage higher than represented by loads labeled *N*, the cycle defined by Notes 1 through 9 is repeated, with stagger as indicated. In the cycle, loads labeled *M* are equivalent to loads labeled *A*.
11. Symbols o, x, and Δ indicate sprinklers on vertical or horizontal stagger.
12. Each square represents a storage cube measuring 4 ft to 5 ft (1.2 m to 1.5 m) on a side. Actual load heights can vary from approximately 18 in. (450 mm) up to 10 ft (3.0 m). Therefore, there could be as few as one load or as many as six or seven loads between in-rack sprinklers that are spaced 10 ft (3.0 m) apart vertically.

FIGURE 25.9.2.2.1(h) *In-Rack Sprinkler Arrangement, Class I, II, III, or IV Commodities, Storage Height Over 25 ft (7.6 m) — Option 1.*

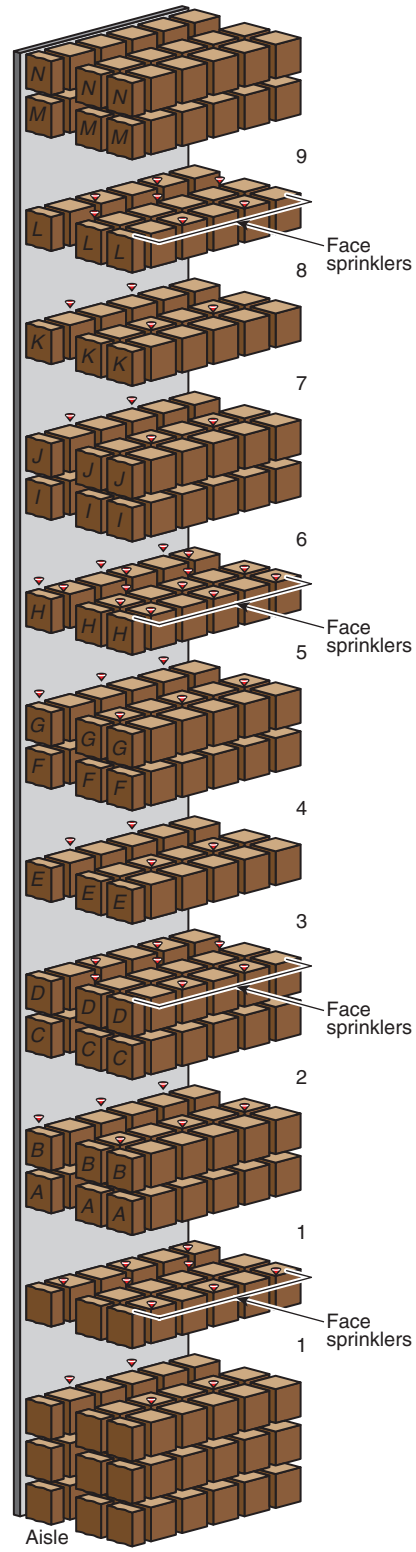

EXHIBIT 25.24 *Positioning of In-Rack Sprinklers in Accordance with Figure 25.9.2.2.1(h). (Courtesy Tyco Fire Products LP)*

EDUFIRE.IR

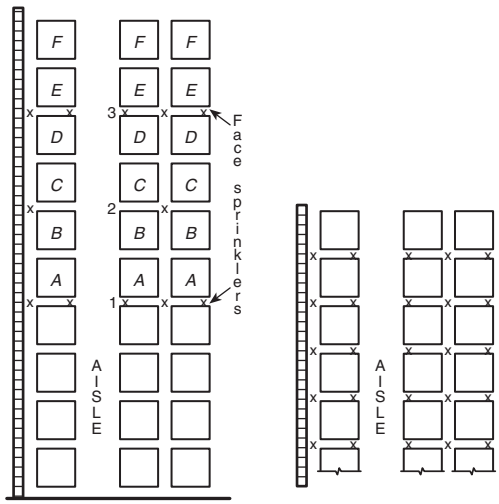

Notes:
1. Sprinklers labeled 1 (the selected array from Table 25.9.2.2.1) shall be required where loads labeled *A* or *B* represent top of storage.
2. Sprinklers labeled 1 and 2 shall be required where loads labeled *C* or *D* represent top of storage.
3. Sprinklers labeled 1 and 3 shall be required where loads labeled *E* or *F* represent top of storage.
4. For storage higher than represented by loads labeled *F*, the cycle defined by Notes 2 and 3 is repeated.
5. Symbol x indicates face and in-rack sprinklers.
6. Each square represents a storage cube measuring 4 ft to 5 ft (1.2 m to 1.5 m) on a side. Actual load heights can vary from approximately 18 in. (450 mm) up to 10 ft (3.0 m). Therefore, there could be as few as one load or as many as six or seven loads between in-rack sprinklers that are spaced 10 ft (3.0 m) apart vertically.

FIGURE 25.9.2.2.1(i) *In-Rack Sprinkler Arrangement, Class I, II, III, or IV Commodities, Storage Height Over 25 ft (7.6 m) — Option 2.*

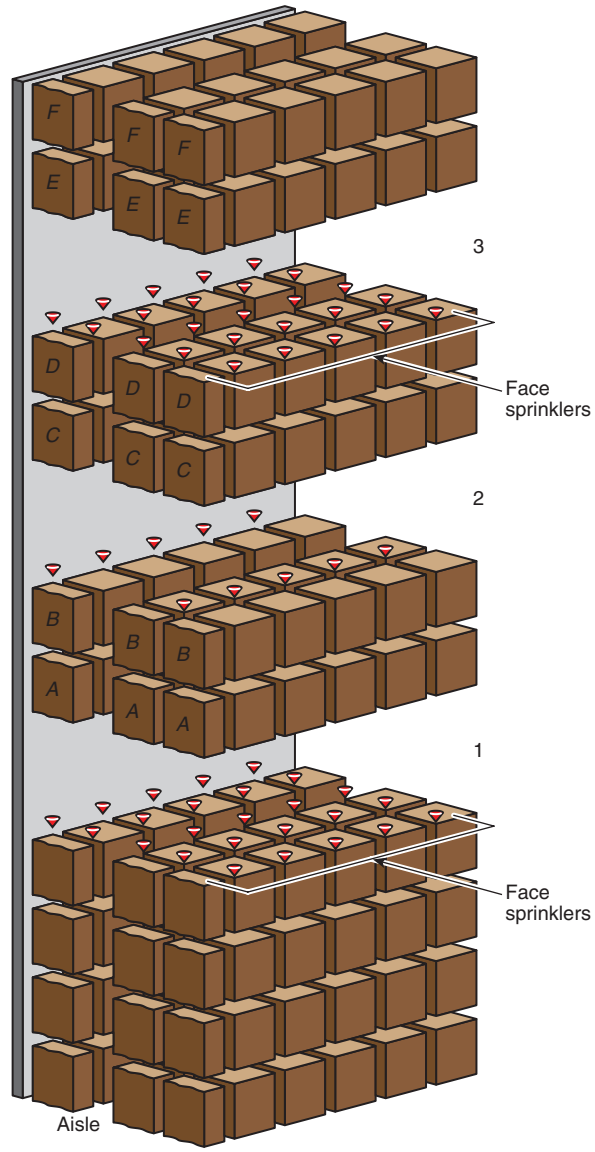

EXHIBIT 25.25 *Positioning of In-Rack Sprinklers in Accordance with Figure 25.9.2.2.1(i). (Courtesy Tyco Fire Products LP)*

EDUFIRE.IR

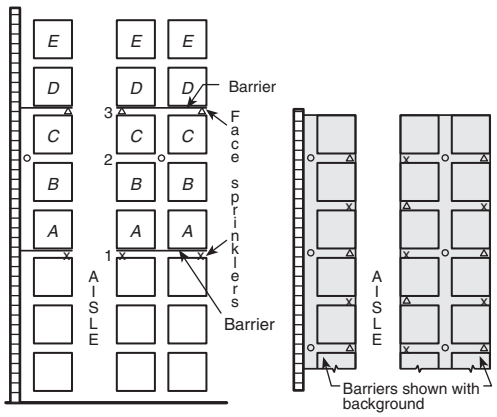

Notes:

1. Sprinklers labeled 1 (the selected array from Table 25.9.2.2.1) shall be required where loads labeled *A* or *B* represent top of storage.
2. Sprinklers labeled 1 and 2 and barrier labeled 1 shall be required where loads labeled *C* represent top of storage.
3. Sprinklers and barriers labeled 1 and 3 shall be required where loads labeled *D* or *E* represent top of storage.
4. For storage higher than represented by loads labeled *E*, the cycle defined by Notes 2 and 3 is repeated.
5. Symbol Δ or x indicates sprinklers on vertical or horizontal stagger.
6. Symbol o indicates longitudinal flue space sprinklers.
7. Each square represents a storage cube measuring 4 ft to 5 ft (1.2 m to 1.5 m) on a side. Actual load heights can vary from approximately 18 in. (450 mm) up to 10 ft (3.0 m). Therefore, there could be as few as one load or as many as six or seven loads between in-rack sprinklers that are spaced 10 ft (3.0 m) apart vertically.

FIGURE 25.9.2.2.1(j) *In-Rack Sprinkler Arrangement, Class I, II, III, or IV Commodities, Storage Height Over 25 ft (7.6 m) — Option 3.*

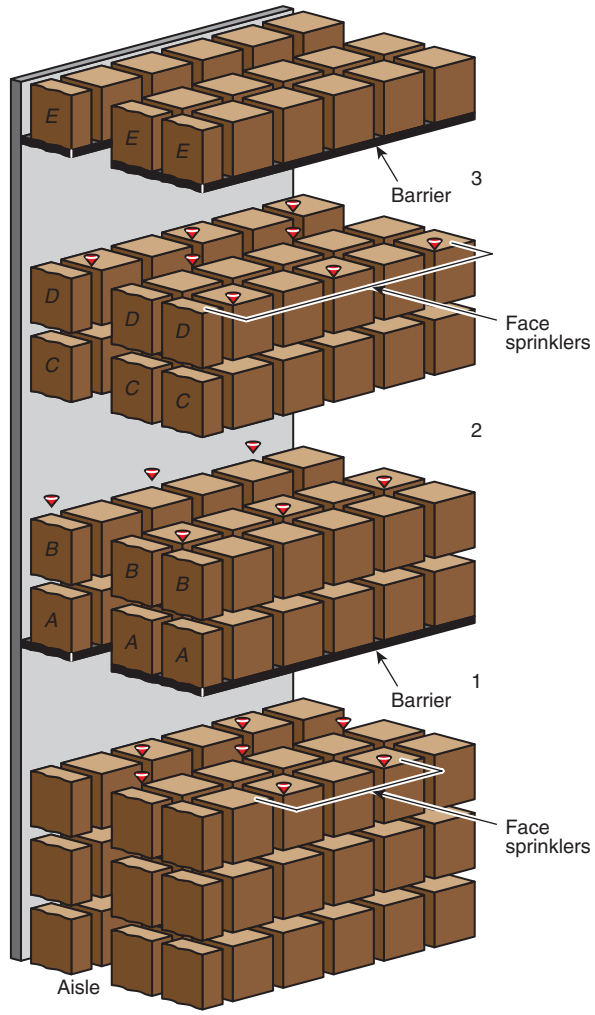

EXHIBIT 25.26 *Positioning of In-Rack Sprinklers in Accordance with Figure 25.9.2.2.1(j). (Courtesy Tyco Fire Products LP)*

EDUFIRE.IR

25.9.2.3.1* In multiple-row racks with a maximum of 10 ft (3.0 m) between the top of storage and the ceiling, in-rack sprinklers shall be in accordance with Table 25.9.2.3.1 and Figure 25.9.2.3.1(a) through Figure 25.9.2.3.1(c).

Exhibit 25.27 through Exhibit 25.29 illustrate the application of the in-rack sprinkler placement requirements from Figure 25.9.2.3.1(a) through Figure 25.9.2.3.1(c), respectively.

TABLE 25.9.2.3.1 *Multiple-Row Racks of Nonencapsulated Class I Through Class IV Commodities Stored Over 25 ft (7.6 m) in Height Protected by CMDA Sprinklers at Ceiling Level*

Commodity Class	In-Rack Sprinklers[a,b,c]						Stagger	Figure	Maximum Allowable Storage Height Above Top In-Rack Sprinkler Level	
	Maximum Vertical Spacing		Maximum Horizontal Spacing in a Flue		Maximum Horizontal Spacing across Flue					
	ft	m	ft	m	ft	m			ft	m
I	20	6.1	12	3.7	10	3	Between adjacent flues	25.9.2.3.1(a)	10	3
I, II, III	15	4.6	10	3	10	3		25.9.2.3.1(b)	10	3
I, II, III, IV	10	3	10	3	10	3		25.9.2.3.1(c)	5	1.5

[a]All four rack faces shall be protected by sprinklers located within the racks and no more than 18 in. (450 mm) from the faces, as indicated in Figure 25.9.2.3.1(a) through Figure 25.9.2.3.1(c). It shall not be required for each sprinkler level to protect all faces.

[b]All in-rack sprinkler spacing dimensions start from the floor.

[c]In Figure 25.9.2.3.1(a) through Figure 25.9.2.3.1(c), each square represents a storage cube that measures 4 ft to 5 ft (1.2 m to 1.5 m) on a side. Actual load heights can vary from approximately 18 in. to 10 ft (450 mm to 3.0 m). Therefore, there can be one load to six or seven loads between in-rack sprinklers that are spaced 10 ft (3.0 m) apart vertically.

A.25.9.2.3.1 In multiple-row racks with more than 10 ft (3.0 m) between the maximum height of storage and ceiling, a horizontal barrier should be installed above storage with a level of sprinklers, spaced as stipulated for in-rack sprinklers, installed directly beneath the barrier. In-rack sprinklers should be installed as indicated in Figure 25.9.2.3.1(a) through Figure 25.9.2.3.1(c). Data indicate that the sprinkler protection criteria in 25.9.2.3 are ineffective, by themselves, for rack storage with solid shelves if the required flue spaces are not maintained. Use of Table 25.9.2.3.1, along with the additional provisions that are required by this standard, can provide acceptable protection.

EDUFIRE.IR

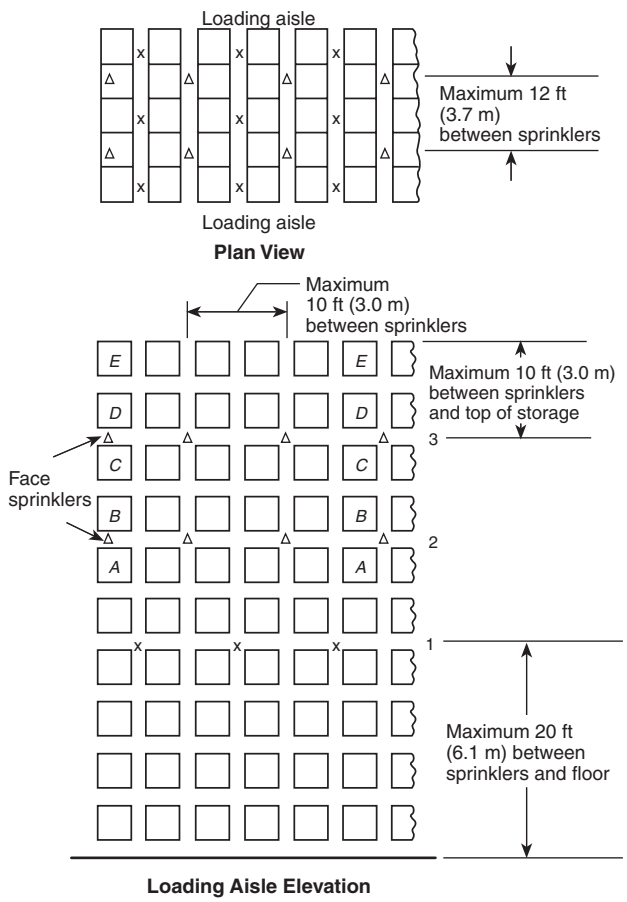

Notes:

1. Sprinklers labeled 1 shall be required if loads labeled *A* represent top of storage.
2. Sprinklers labeled 1 and 2 shall be required if loads labeled *B* or *C* represent top of storage.
3. Sprinklers labeled 1 and 3 shall be required if loads labeled *D* or *E* represent top of storage.
4. For storage higher than represented by loads labeled *E*, the cycle defined by Notes 2 and 3 is repeated, with stagger as indicated.
5. Symbol Δ or x indicates sprinklers on vertical or horizontal stagger.
6. Each square represents a storage cube measuring 4 ft to 5 ft (1.2 m to 1.5 m) on a side. Actual load heights can vary from approximately 18 in. (450 mm) up to 10 ft (3.0 m). Therefore, there could be as few as one load or as many as six or seven loads between in-rack sprinklers that are spaced 10 ft (3.0 m) apart vertically.

FIGURE 25.9.2.3.1(a) *In-Rack Sprinkler Arrangement, Class I Commodities, Multiple-Row Racks, Storage Height Over 25 ft (7.6 m).*

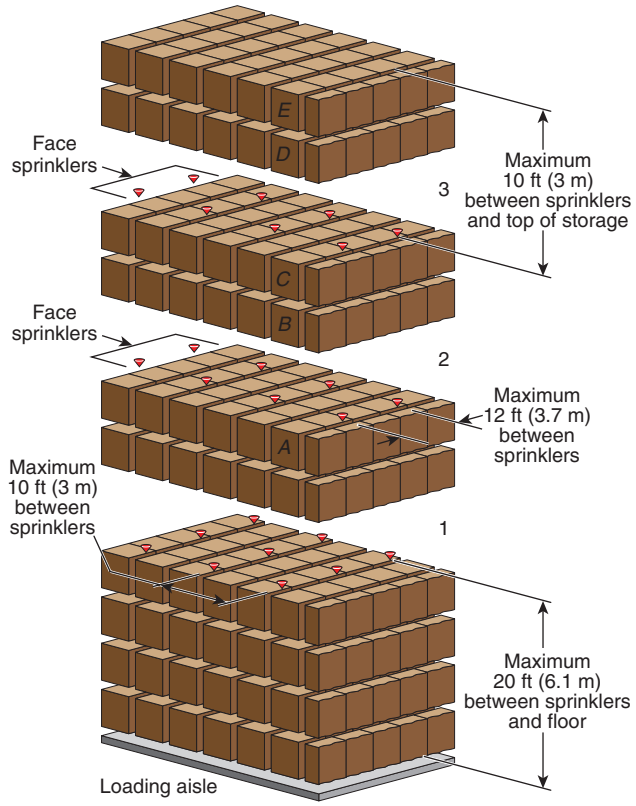

EXHIBIT 25.27 *Positioning of In-Rack Sprinklers in Accordance with Figure 25.9.2.3.1(a). (Courtesy Tyco Fire Products LP)*

EDUFIRE.IR

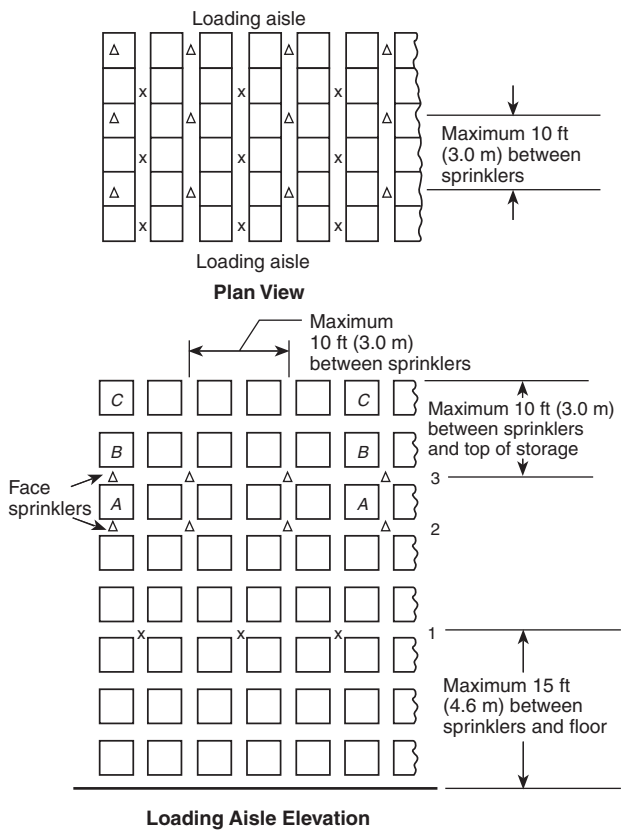

Notes:
1. Sprinklers labeled 1 and 2 shall be required if loads labeled *A* represent top of storage.
2. Sprinklers labeled 1 and 3 shall be required if loads labeled *B* or *C* represent top of storage.
3. For storage higher than represented by loads labeled *C*, the cycle defined by Notes 2 and 3 is repeated, with stagger as indicated.
4. Symbol Δ or x indicates sprinklers on vertical or horizontal stagger.
5. Each square represents a storage cube measuring 4 ft to 5 ft (1.2 m to 1.5 m) on a side. Actual load heights can vary from approximately 18 in. (450 mm) up to 10 ft (3.0 m). Therefore, there could be as few as one load or as many as six or seven loads between in-rack sprinklers that are spaced 10 ft (3.0 m) apart vertically.

FIGURE 25.9.2.3.1(b) *In-Rack Sprinkler Arrangement, Class I, II, or III Commodities, Multiple-Row Racks, Storage Height Over 25 ft (7.6 m).*

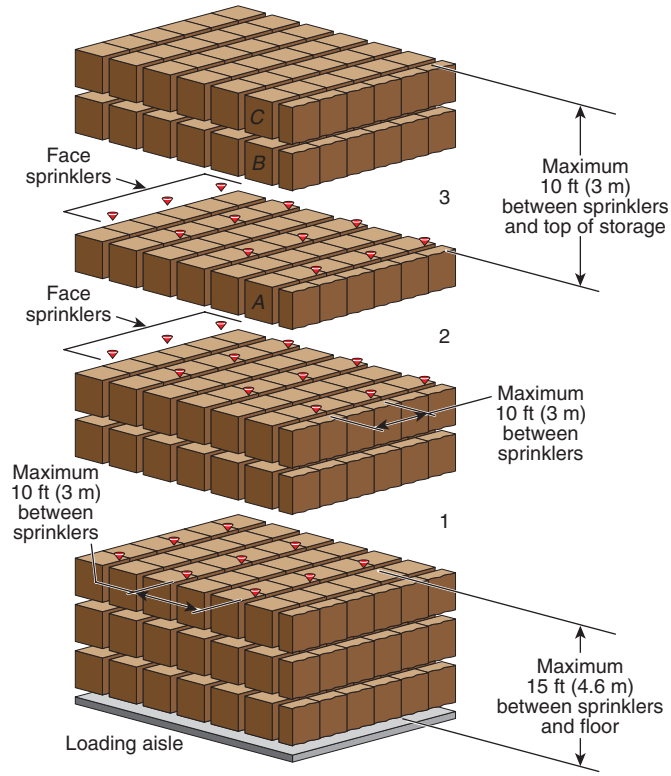

EXHIBIT 25.28 *Positioning of In-Rack Sprinklers in Accordance with Figure 25.9.2.3.1(b). (Courtesy Tyco Fire Products LP)*

25.9.3 Rack Storage of Group A Plastic Commodities Up to and Including 25 ft (7.6 m) in Height.

For rack storage of Group A plastic commodities stored up to 25 ft (7.6 m) in height, see Figure 25.9.3.1(a) through 25.9.3.1(e) to obtain both the allowable ceiling designs and the horizontal and vertical in-rack sprinkler locations for cartoned Group A plastics, and Figure 25.9.3.3(a) through Figure 25.9.3.3(k) for exposed nonexpanded Group A plastics. See Section 25.8 for the in-rack sprinkler requirements for the rack storage of exposed expanded Group A plastics. Also see Sections 25.4 through 25.7 for additional requirements.

25.9.3.1 Where rack storage of cartoned Group A plastic commodities, encapsulated or nonencapsulated, having a clearance to ceiling up to and including 10 ft (3.1 m) require in-rack sprinklers, in-rack sprinkler arrangements shall be selected from Figure 25.9.3.1(a) through Figure 25.9.3.1(e).

EDUFIRE.IR

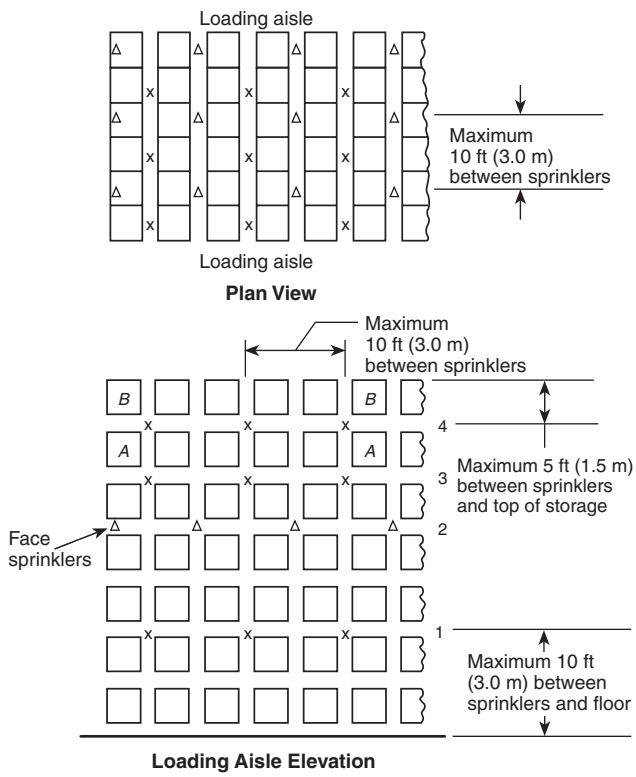

Notes:

1. Sprinklers labeled 1, 2, and 3 shall be required if loads labeled *A* represent top of storage.
2. Sprinklers labeled 1, 2, and 4 shall be required if loads labeled *B* represent top of storage.
3. For storage higher than represented by loads labeled *B*, the cycle defined by Notes 1 and 2 is repeated, with stagger as indicated.
4. Symbol Δ or x indicates sprinklers on vertical or horizontal stagger.
5. Each square represents a storage cube measuring 4 ft to 5 ft (1.2 m to 1.5 m) on a side. Actual load heights can vary from approximately 18 in. (450 mm) up to 10 ft (3.0 m). Therefore, there could be as few as one load or as many as six or seven loads between in-rack sprinklers that are spaced 10 ft (3.0 m) apart vertically.

FIGURE 25.9.2.3.1(c) *In-Rack Sprinkler Arrangement, Class I, II, III, or IV Commodities, Multiple-Row Racks, Storage Height Over 25 ft (7.6 m).*

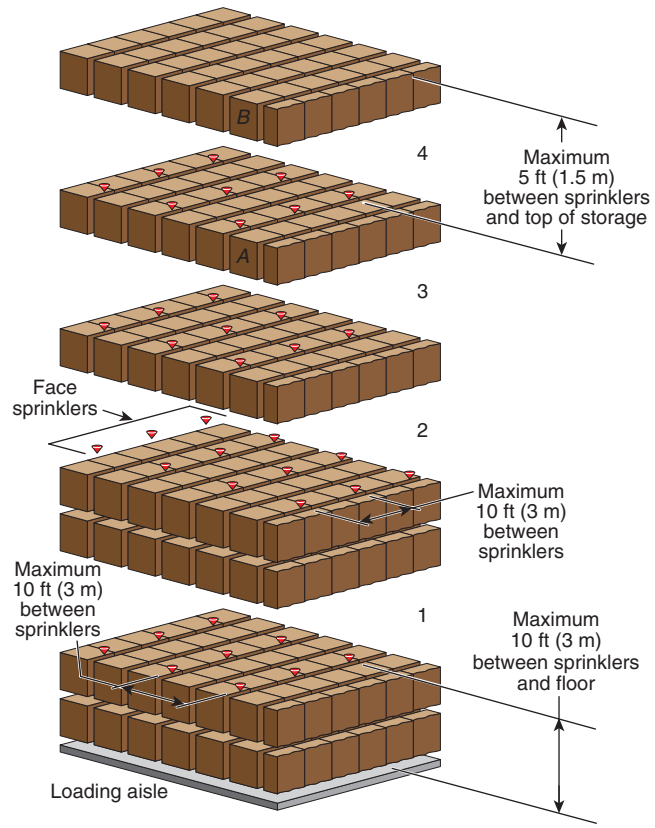

EXHIBIT 25.29 *Positioning of In-Rack Sprinklers in Accordance with Figure 25.9.2.3.1(c). (Courtesy Tyco Fire Products LP)*

Figure 25.9.3.1(a) through Figure 25.9.3.1(e) show in-rack sprinklers in the transverse flues. Where longitudinal flues exist, the in-rack sprinklers need to be placed at the intersections to make sure they are in the path of the fire's growth. The boxes in the figures represent storage loads that are 4 ft to 5 ft (1.2 m to 1.5 m) wide. In the cases where the in-rack sprinklers are shown between every other box, the intent is to have the in-rack sprinklers no more than 11 ft (3.3 m) apart [5 ft (1.5 m) for the boxes and 6 in. (152 mm) for the two transverse flues]. Where rack uprights are more than 11 ft (3.3 m) apart, in-rack sprinklers should be installed at the intersection of the flue spaces at the rack uprights and at the intermediate flue spaces located between the rack uprights.

In cases where the figures show in-rack sprinklers at every intersection of transverse and longitudinal flues, the sprinklers should be a maximum of 5.5 ft (1.7 m) apart. If flue spaces are more than 5.5 ft (1.7 m) apart, sprinklers should be installed at every intersection of flue spaces and between flue spaces so that they are no more than 5.5 ft (1.7 m) apart. See the commentary for 25.5.1.2 for additional discussion.

Exhibit 25.30 through Exhibit 25.34 illustrate the application of the in-rack sprinkler placement requirements from Figure 25.9.3.1(a) through Figure 25.9.3.1(e), respectively.

EDUFIRE.IR

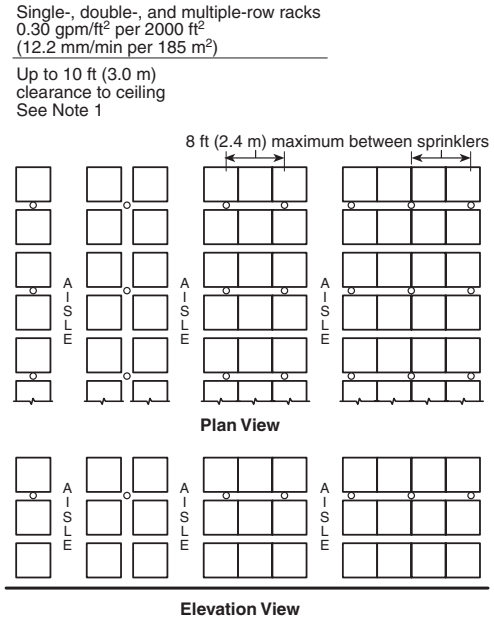

Notes:
1. Single level of in-rack sprinklers [K-5.6 (80) or K-8.0 (115) operating at 15 psi (1.0 bar) minimum] installed as indicated in the transverse flue spaces.
2. Each square represents a storage cube measuring 4 ft to 5 ft (1.2 m to 1.5 m) on a side. Actual load heights can vary from approximately 18 in. (450 mm) up to 10 ft (3.0 m). Therefore, there could be as few as one load or as many as six or seven loads between in-rack sprinklers that are spaced 10 ft (3.0 m) apart vertically.

FIGURE 25.9.3.1(a) *In-Rack Sprinkler Arrangement, Cartoned Group A Plastic Storage Up to 15 ft (4.6 m) in Height with Up to 10 ft (3.0 m) Clearance to Ceiling.*

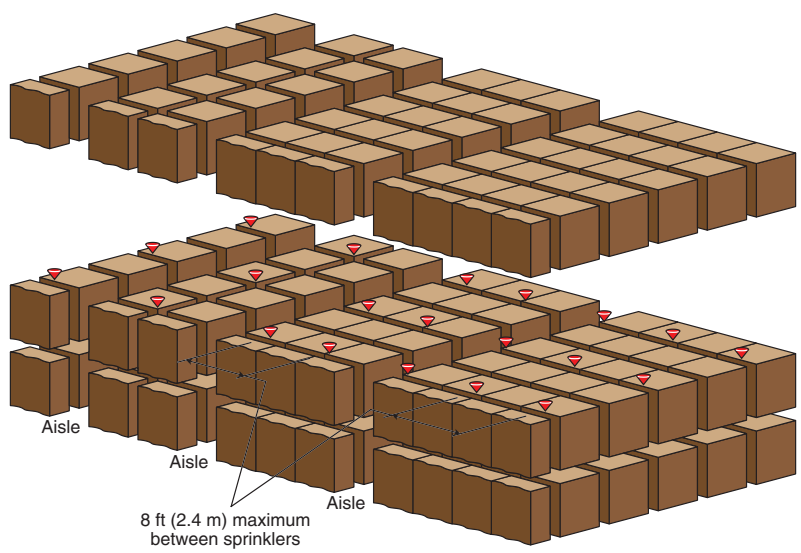

EXHIBIT 25.30 *Positioning of In-Rack Sprinklers in Accordance with Figure 25.9.3.1(a). (Courtesy Tyco Fire Products LP)*

EDUFIRE.IR

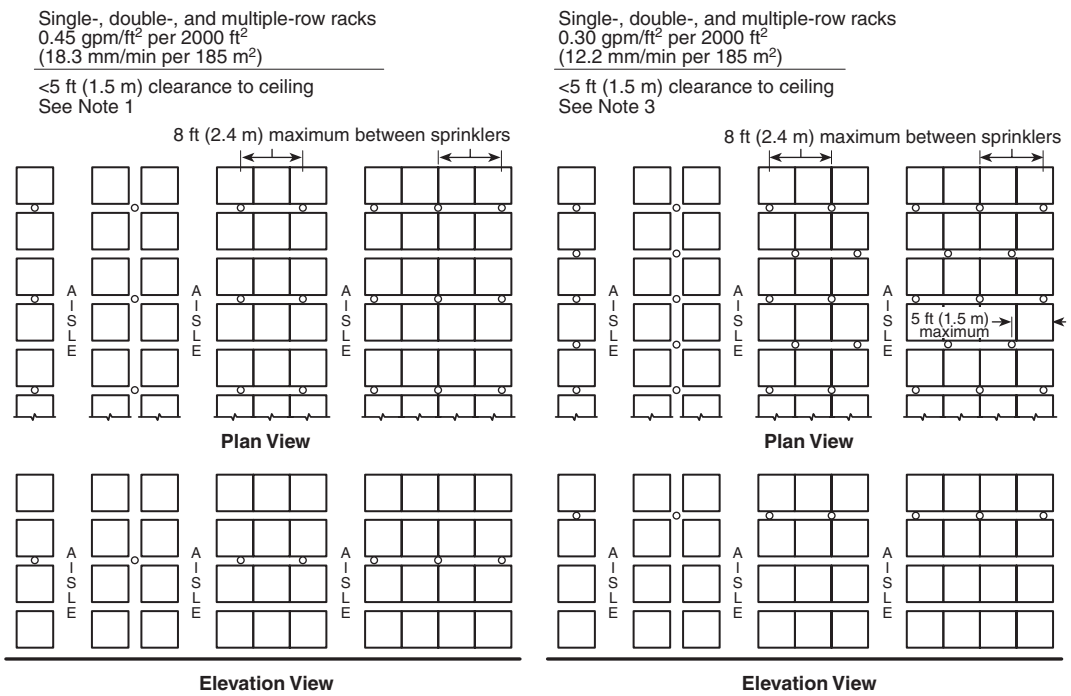

Notes:

1. Single level of in-rack sprinklers [K-5.6 (80) or K-8.0 (115) operating at 15 psi (1.0 bar) minimum] installed as indicated in the transverse flue spaces.
2. Single level of in-rack sprinklers [K-8.0 (115) operating at 15 psi (1.0 bar) minimum or K-5.6 (80) operating at 30 psi (2.1 bar) minimum] installed on 4 ft to 5 ft (1.2 m to 1.5 m) spacings located, as indicated, in the longitudinal flue space at the intersection of every transverse flue space.
3. Each square represents a storage cube measuring 4 ft to 5 ft (1.2 m to 1.5 m) on a side. Actual load heights can vary from approximately 18 in. (450 mm) up to 10 ft (3.0 m). Therefore, there could be as few as one load or as many as six or seven loads between in-rack sprinklers that are spaced 10 ft (3.0 m) apart vertically.

FIGURE 25.9.3.1(b) *In-Rack Sprinkler Arrangement, Cartoned Group A Plastic Storage Up to 20 ft (6.1 m) in Height with <5 ft (1.5 m) Clearance to Ceiling.*

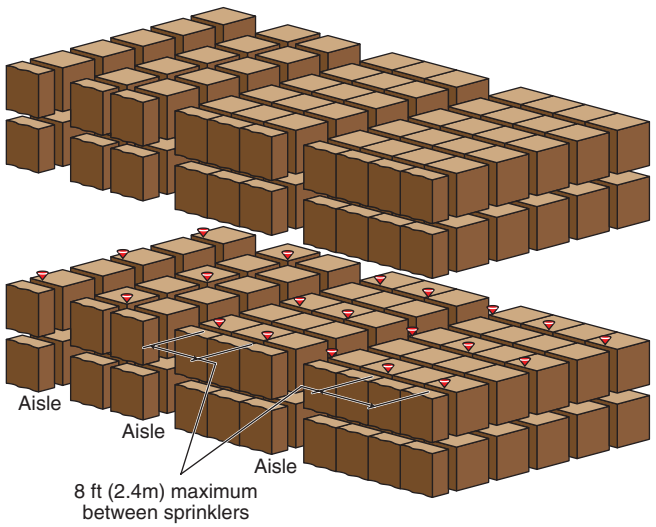

EXHIBIT 25.31(a) *Positioning of In-Rack Sprinklers in Accordance with Figure 25.9.3.1(b) – Left Figure. (Courtesy Tyco Fire Products LP)*

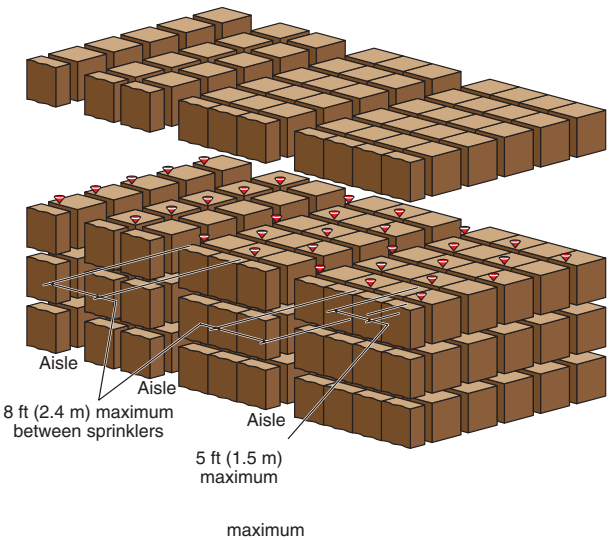

EXHIBIT 25.31(b) *Positioning of In-Rack Sprinklers in Accordance with Figure 25.9.3.1(b) – Right Figure. (Courtesy Tyco Fire Products LP)*

EDUFIRE.IR

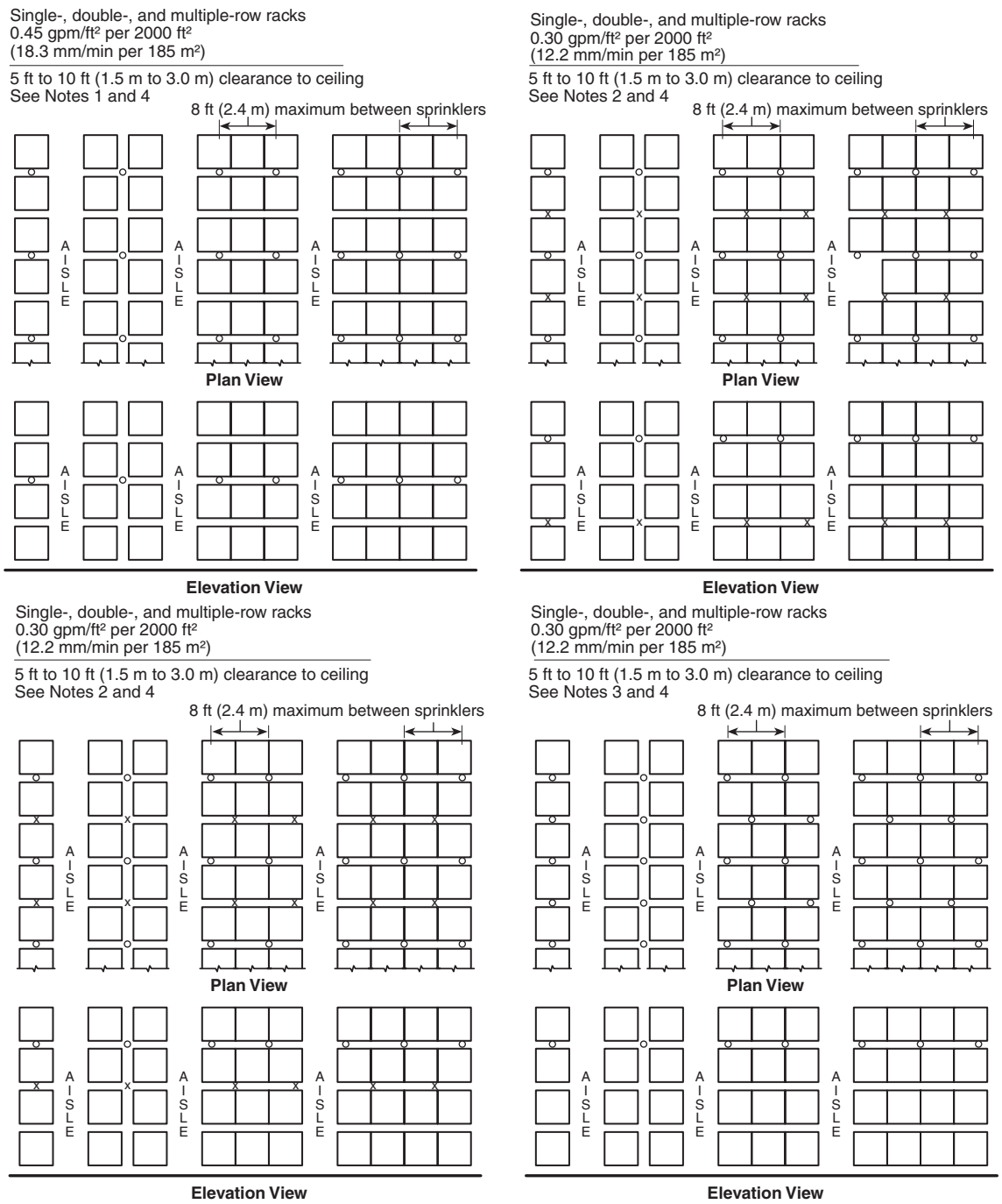

Notes:
1. Single level of in-rack sprinklers [K-5.6 (80) or K-8.0 (115) operating at 15 psi (1.0 bar) minimum] installed as indicated in the transverse flue spaces.
2. Two levels of in-rack sprinklers [K-5.6 (80) or K-8.0 (115) operating at 15 psi (1.0 bar) minimum] installed as indicated and staggered in the transverse flue space.
3. Single level of in-rack sprinklers [K-8 (115) operating at 15 psi (1.0 bar) or K-5.6 (80) operating at 30 psi (2.1 bar) minimum] installed on 4 ft to 5 ft (1.2 m to 1.5 m) spacings located, as indicated, in the longitudinal flue space at the intersection of every transverse flue space.
4. Each square represents a storage cube measuring 4 ft to 5 ft (1.2 m to 1.5 m) on a side. Actual load heights can vary from approximately 18 in. (450 mm) up to 10 ft (3.0 m). Therefore, there could be as few as one load or as many as six or seven loads between in-rack sprinklers that are spaced 10 ft (3.0 m) apart vertically.

FIGURE 25.9.3.1(c) *In-Rack Sprinkler Arrangement, Cartoned Group A Plastic Storage Up to 20 ft (6.1 m) in Height with 5 ft to 10 ft (1.5 m to 3.0 m) Clearance to Ceiling.*

EDUFIRE.IR

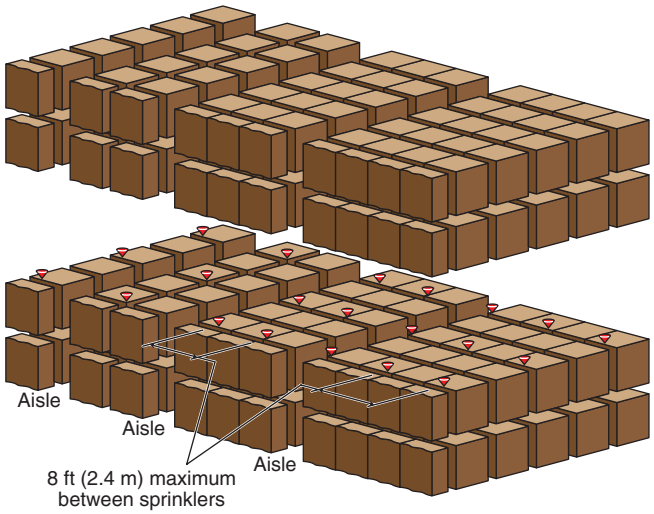

EXHIBIT 25.32(a) *Positioning of In-Rack Sprinklers in Accordance with Figure 25.9.3.1(c) – Upper Left Figure. (Courtesy Tyco Fire Products LP)*

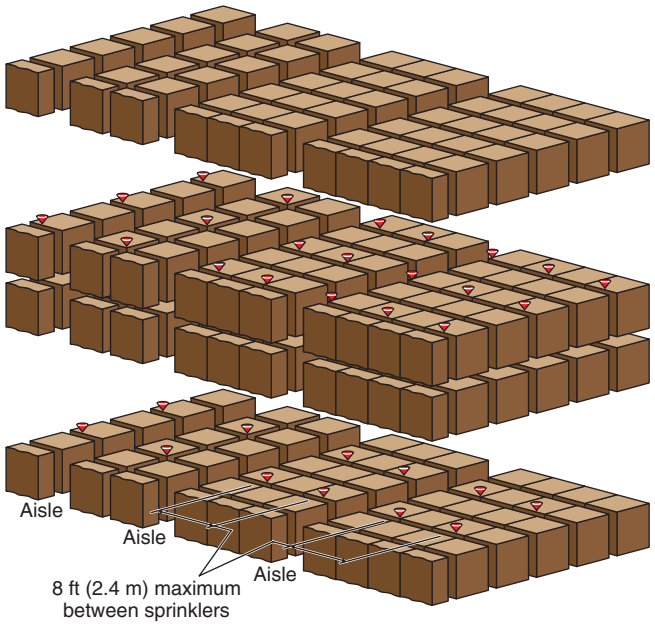

EXHIBIT 25.32(b) *Positioning of In-Rack Sprinklers in Accordance with Figure 25.9.3.1(c) – Upper Right Figure. (Courtesy Tyco Fire Products LP)*

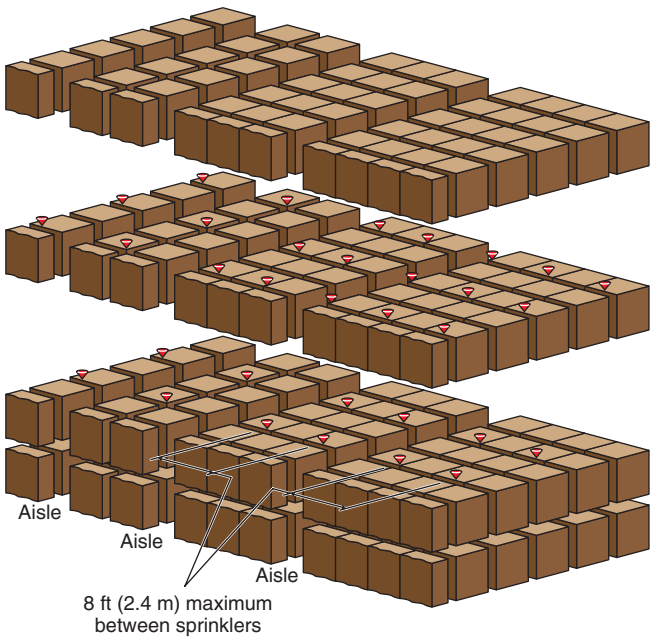

EXHIBIT 25.32(c) *Positioning of In-Rack Sprinklers in Accordance with Figure 25.9.3.1(c) – Lower Left Figure. (Courtesy Tyco Fire Products LP)*

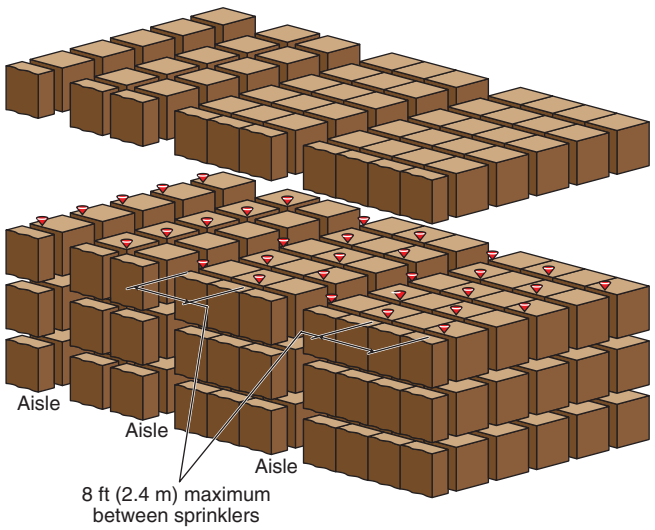

EXHIBIT 25.32(d) *Positioning of In-Rack Sprinklers in Accordance with Figure 25.9.3.1(c) – Lower Right Figure. (Courtesy Tyco Fire Products LP)*

EDUFIRE.IR

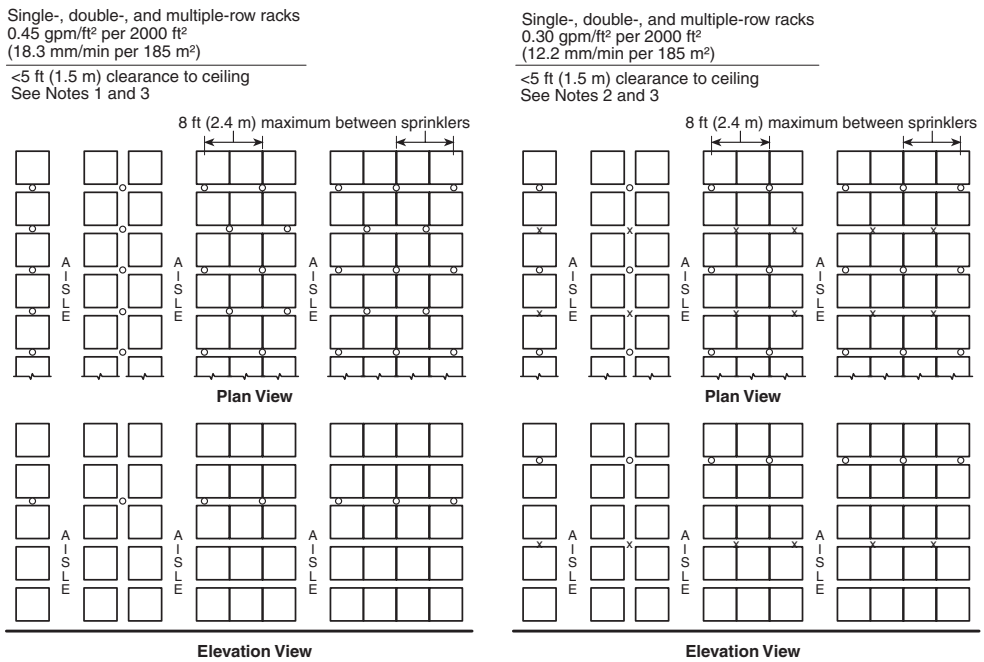

Notes:

1. Single level of in-rack sprinklers [K-8.0 (115) operating at 15 psi (1.0 bar) minimum or K-5.6 (80) operating at 30 psi (2.1 bar) minimum] installed on 4 ft to 5 ft (1.2 m to 1.5 m) spacings located, as indicated, in the longitudinal flue space at the intersection of every transverse flue space.
2. Two levels of in-rack sprinklers [K-5.6 (80) or K-8.0 (115) operating at 15 psi (1.0 bar) minimum] installed as indicated and staggered in the transverse flue space.
3. Each square represents a storage cube measuring 4 ft to 5 ft (1.2 m to 1.5 m) on a side. Actual load heights can vary from approximately 18 in. (450 mm) up to 10 ft (3.0 m). Therefore, there could be as few as one load or as many as six or seven loads between in-rack sprinklers that are spaced 10 ft (3.0 m) apart vertically.

FIGURE 25.9.3.1(d) *In-Rack Sprinkler Arrangement, Cartoned Group A Plastic Storage Up to 25 ft (7.6 m) in Height with <5 ft (1.5 m) Clearance to Ceiling.*

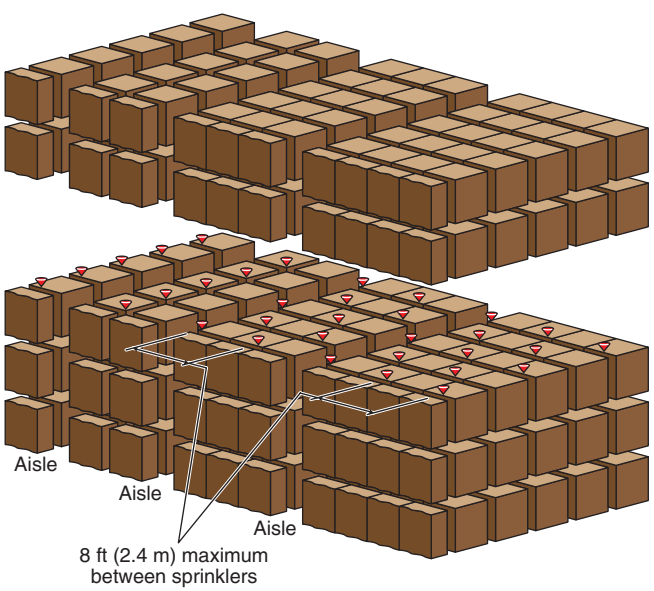

EXHIBIT 25.33(a) *Positioning of In-Rack Sprinklers in Accordance with Figure 25.9.3.1(d) – Left Figure. (Courtesy Tyco Fire Products LP)*

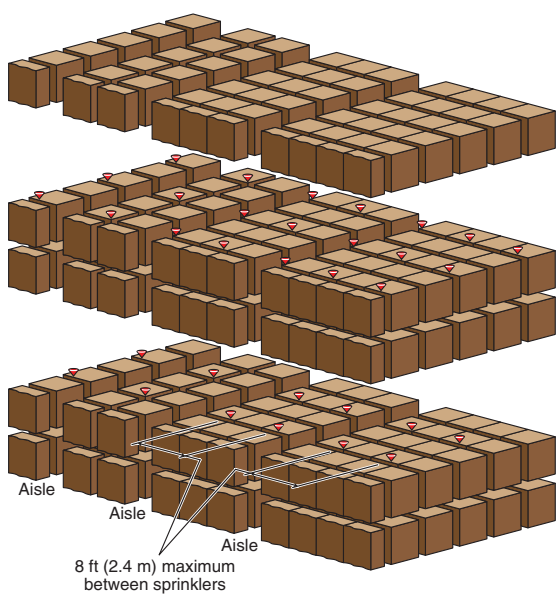

EXHIBIT 25.33(b) *Positioning of In-Rack Sprinklers in Accordance with Figure 25.9.3.1(d) – Right Figure. (Courtesy Tyco Fire Products LP)*

EDUFIRE.IR

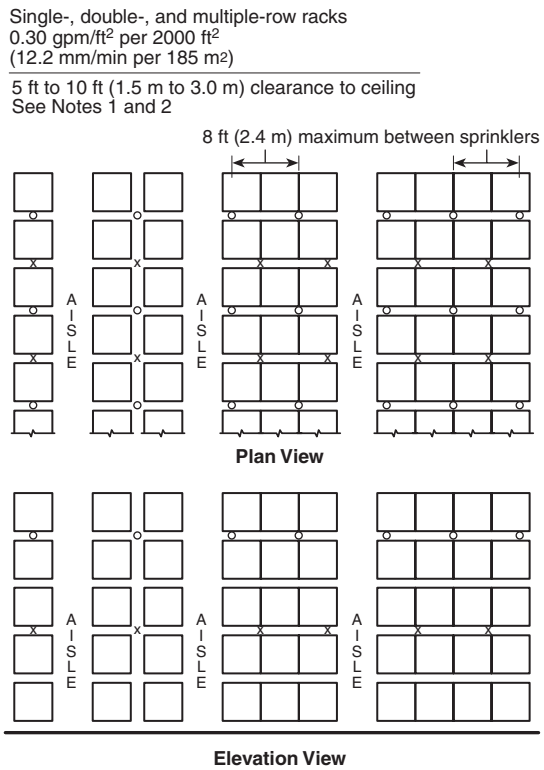

Notes:

1. Two levels of in-rack sprinklers [K-5.6 (80) or K-8.0 (115) operating at 15 psi (1.0 bar) minimum] installed on 8 ft to 10 ft (2.4 m to 3.0 m) spacings located as indicated and staggered in the transverse flue space.
2. Each square represents a storage cube measuring 4 ft to 5 ft (1.2 m to 1.5 m) on a side. Actual load heights can vary from approximately 18 in. (450 mm) up to 10 ft (3.0 m). Therefore, there could be as few as one load or as many as six or seven loads between in-rack sprinklers that are spaced 10 ft (3.0 m) apart vertically.

FIGURE 25.9.3.1(e) *In-Rack Sprinkler Arrangement, Cartoned Group A Plastic Storage Up to 25 ft (7.6 m) in Height with 5 ft to 10 ft (1.5 m to 3.0 m) Clearance to Ceiling.*

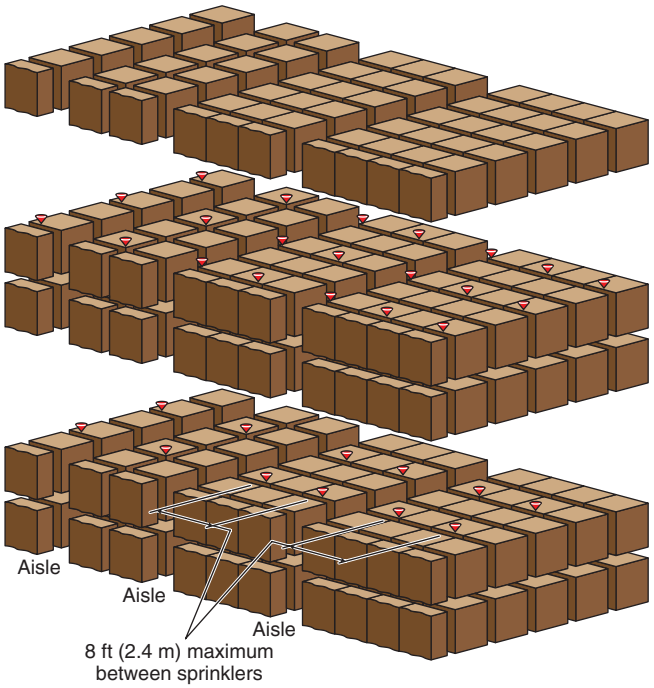

EXHIBIT 25.34 *Positioning of In-Rack Sprinklers in Accordance with Figure 25.9.3.1(e). (Courtesy Tyco Fire Products LP)*

25.9.3.2* Notes in each figure shall be permitted to clarify options.

A.25.9.3.2 In most of Figure 25.9.3.1(a) through Figure 25.9.3.1(e), the designer is presented with multiple options from which to choose. The single column of boxes in the elevation view represents single-row rack storage. The double column of boxes in the elevation view represents double-row rack storage, and the options with three or four columns of boxes represent different arrangements of multiple-row rack storage. The "o" and "x" characters in the elevation and plan views represent different rows of in-rack sprinklers. The "o" and "x" characters in the elevation view show the vertical spacing of in-rack sprinklers while the characters in the plan view show the horizontal spacing of in-rack sprinklers. Different symbols are used so that the upper and lower levels of in-rack sprinklers can be determined when looking at the plan view.

EDUFIRE.IR

25.9.3.3* Where rack storage of exposed nonexpanded Group A plastic commodities, encapsulated or nonencapsulated, require in-rack sprinklers, in-rack sprinkler arrangements shall be selected from Figure 25.9.3.3(a) through Figure 25.9.3.3(k).

The requirements in 25.9.3.3 were added to the 2013 edition to provide specific guidance on the protection of exposed nonexpanded plastics. Figure 25.9.3.3(a) through Figure 25.9.3.3(k) are used in a manner similar to that for the figures for cartoned plastic [see Figure 25.9.3.1(a) through Figure 25.9.3.1(e)]. Referring to the figure that represents the correct combination of storage type/height and ceiling height, the user selects a protection scenario from the options available in the figure.

Each figure shows a plan view and an elevation view of two variations of a single-row rack and a double-row rack and two variations of multiple-row racks. The plan view shows the horizontal spacing of in-rack sprinklers in each type of rack configuration. The elevation view shows the vertical spacing of in-rack sprinklers for each rack configuration. With each storage cube measuring 4 ft to 5 ft (1.2 m to 1.5 m) represented in each dimension, the maximum spacing between in-rack sprinklers, both horizontally and vertically, can be determined by the number of storage cubes between the illustrated in-rack sprinkler positions. It is important to note that the location of the in-rack sprinklers with respect to the available flue spaces also must meet the provisions of 25.5.1.2, 25.5.1.3, and 25.5.1.4.

It should be noted that no specific guidance is provided relative to the allowance or prohibition of interpolation between storage heights using the figures in 25.9.3.3. Exhibit 25.35 through Exhibit 25.45 illustrate the application of the in-rack sprinkler placement requirements from Figure 25.9.3.3(a) through Figure 25.9.3.3(k), respectively.

A.25.9.3.3 Each of the figures in 25.9.3.3 shows a variety of different potential rack arrangements. The first single-row rack (SRR) to the left in each figure shows a rack against a wall. The second SRR shows a single-row rack with aisles on each side. The double-row rack (DRR) is in the center of the figure. The first multiple-row rack (MRR) shows the in-rack sprinkler position for racks up to 15 ft (4.6 m) long in the dimension parallel to the transverse flue. The second MRR shows longer rack structures where the in-rack sprinkler pattern would repeat.

EDUFIRE.IR

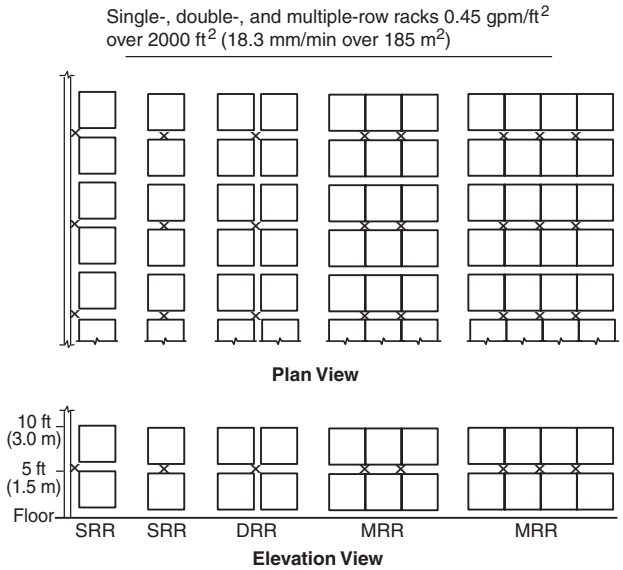

Note: Each square represents a storage cube measuring 4 ft to 5 ft (1.2 m to 1.5 m) on a side. Actual load heights can vary from approximately 18 in. to 10 ft (450 mm to 3.0 m). Therefore, there could be as few as one load or as many as six or seven loads between in-rack sprinklers that are spaced 10 ft (3.0 m) apart vertically.

FIGURE 25.9.3.3(a) *In-Rack Sprinkler Arrangement, Exposed Nonexpanded Group A Plastic Commodities Up to 10 ft (3.0 m) in Height in Up to a 20 ft (6.1 m) High Building — Option 1.*

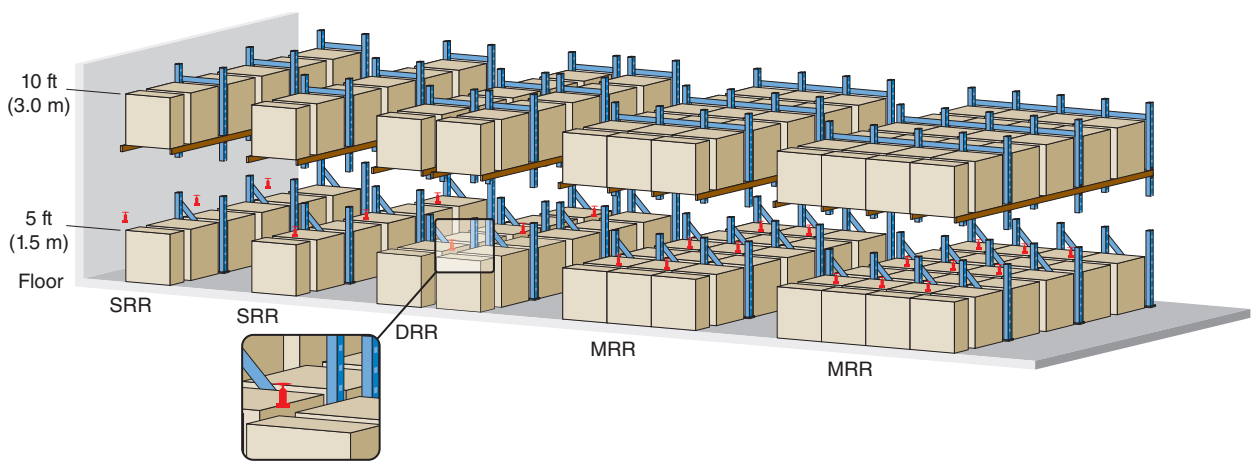

EXHIBIT 25.35 *Positioning of In-Rack Sprinklers in Accordance with Figure 25.9.3.3(a). (Courtesy of Stephan Laforest)*

EDUFIRE.IR

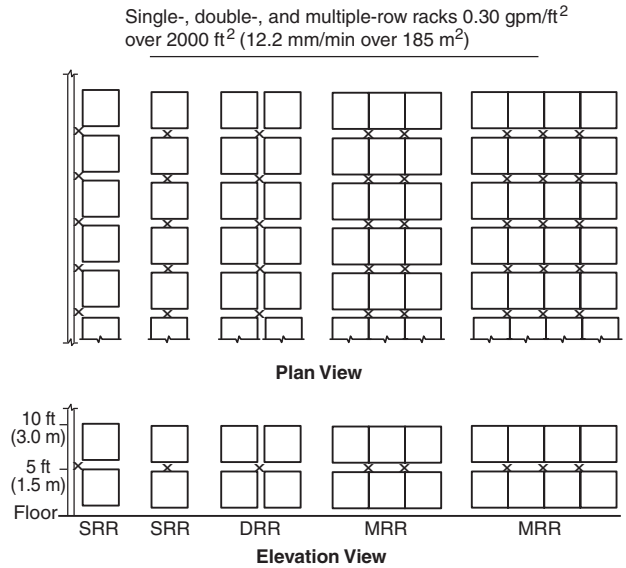

Note: Each square represents a storage cube measuring 4 ft to 5 ft (1.2 m to 1.5 m) on a side. Actual load heights can vary from approximately 18 in. to 10 ft (450 mm to 3.0 m). Therefore, there could be as few as one load or as many as six or seven loads between in-rack sprinklers that are spaced 10 ft (3.0 m) apart vertically.

FIGURE 25.9.3.3(b) *In-Rack Sprinkler Arrangement, Exposed Nonexpanded Group A Plastic Commodities Up to 10 ft (3.0 m) in Height in Up to a 20 ft (6.1 m) High Building — Option 2.*

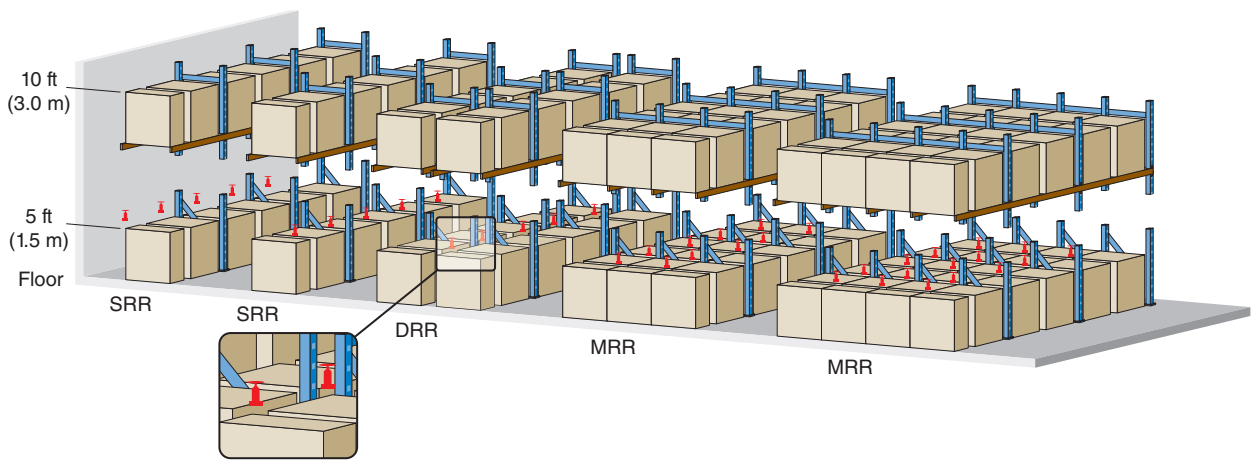

EXHIBIT 25.36 *Positioning of In-Rack Sprinklers in Accordance with Figure 25.9.3.3(b). (Courtesy of Stephan Laforest)*

EDUFIRE.IR

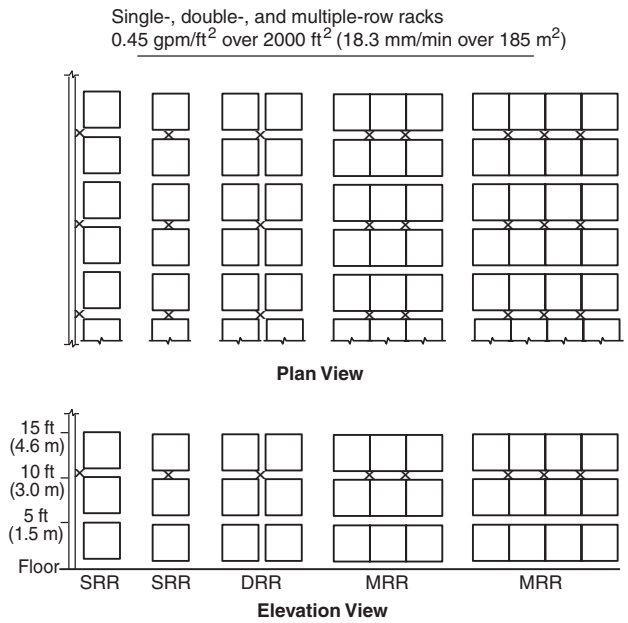

Note: Each square represents a storage cube measuring 4 ft to 5 ft (1.2 m to 1.5 m) on a side. Actual load heights can vary from approximately 18 in. to 10 ft (450 mm to 3.0 m). Therefore, there could be as few as one load or as many as six or seven loads between in-rack sprinklers that are spaced 10 ft (3.0 m) apart vertically.

FIGURE 25.9.3.3(c) *In-Rack Sprinkler Arrangement, Exposed Nonexpanded Group A Plastic Commodities Up to 15 ft (4.6 m) in Height in Up to a 25 ft (7.6 m) High Building — Option 1.*

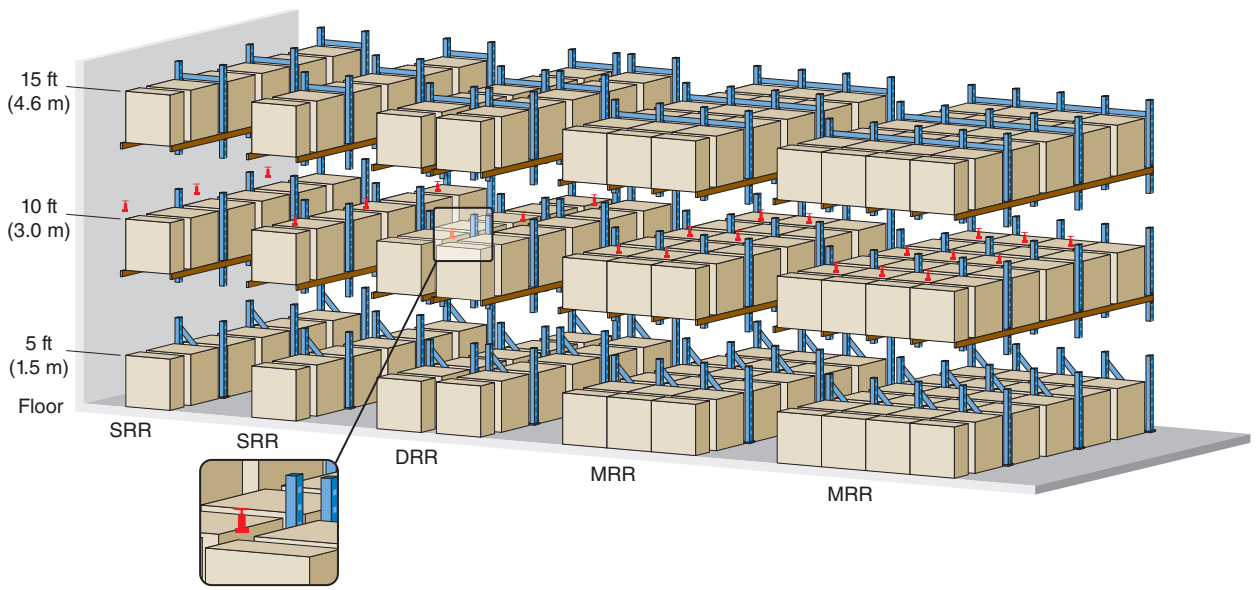

EXHIBIT 25.37 *Positioning of In-Rack Sprinklers in Accordance with Figure 25.9.3.3(c). (Courtesy of Stephan Laforest)*

EDUFIRE.IR

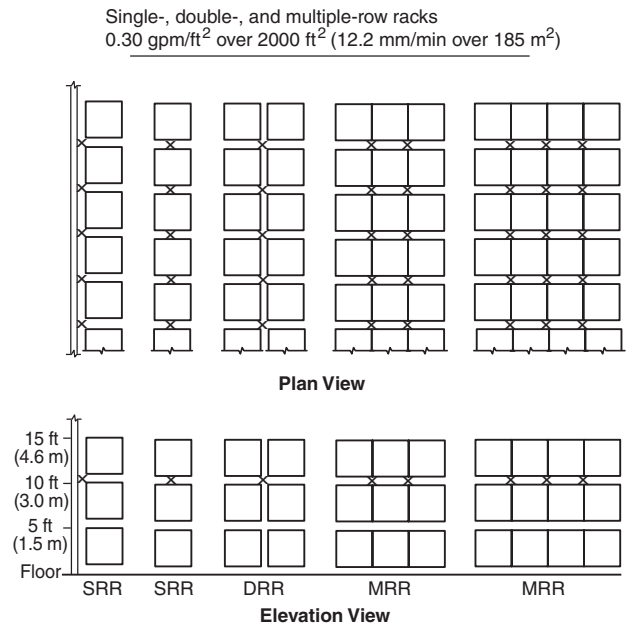

Note: Each square represents a storage cube measuring 4 ft to 5 ft (1.2 m to 1.5 m) on a side. Actual load heights can vary from approximately 18 in. to 10 ft (450 mm to 3.0 m). Therefore, there could be as few as one load or as many as six or seven loads between in-rack sprinklers that are spaced 10 ft (3.0 m) apart vertically.

FIGURE 25.9.3.3(d) *In-Rack Sprinkler Arrangement, Exposed Nonexpanded Group A Plastic Commodities Up to 15 ft (4.6 m) in Height in Up to a 25 ft (7.6 m) High Building — Option 2.*

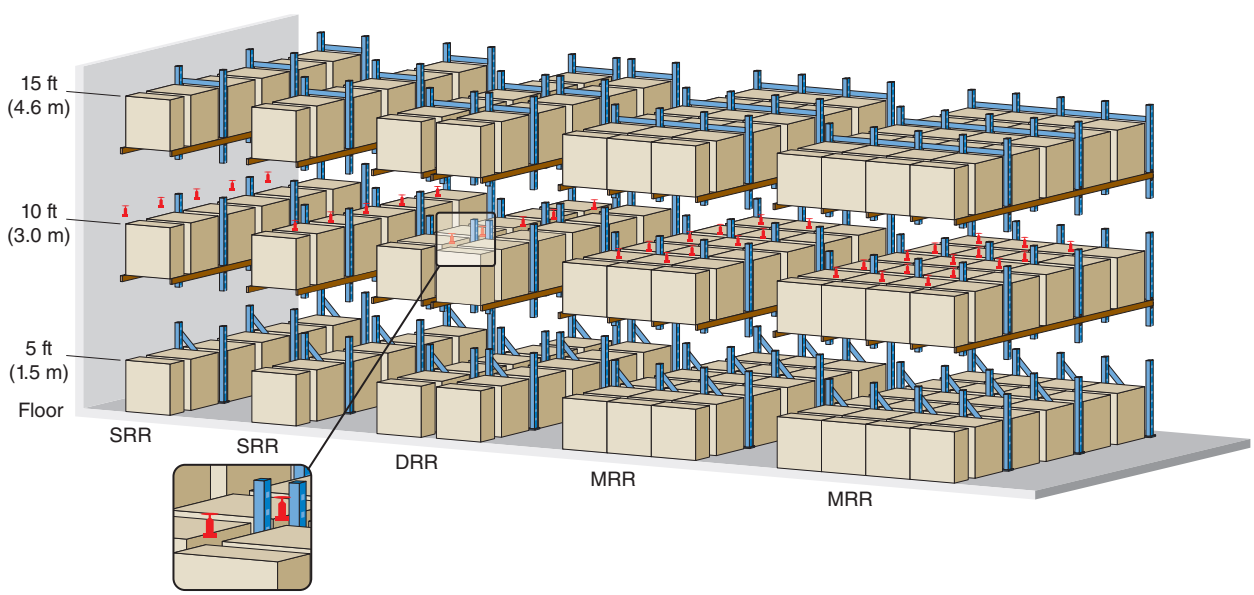

EXHIBIT 25.38 *Positioning of In-Rack Sprinklers in Accordance with Figure 25.9.3.3(d). (Courtesy of Stephan Laforest)*

EDUFIRE.IR

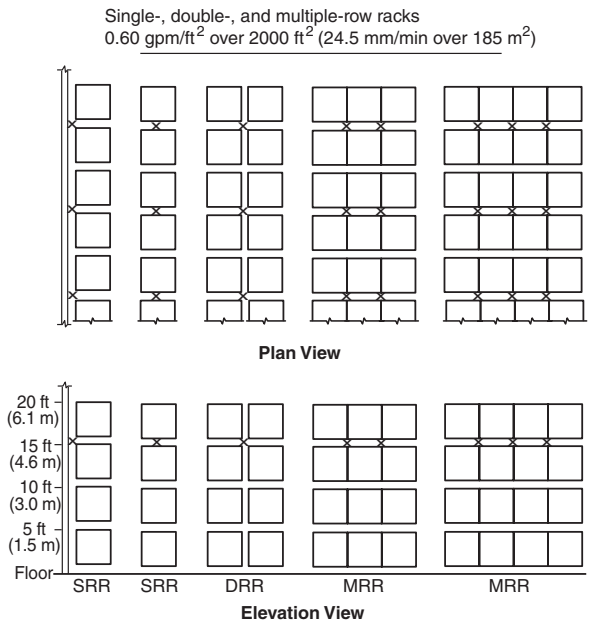

Note: Each square represents a storage cube measuring 4 ft to 5 ft (1.2 m to 1.5 m) on a side. Actual load heights can vary from approximately 18 in. to 10 ft (450 mm to 3.0 m). Therefore, there could be as few as one load or as many as six or seven loads between in-rack sprinklers that are spaced 10 ft (3.0 m) apart vertically.

FIGURE 25.9.3.3(e) *In-Rack Sprinkler Arrangement, Exposed Nonexpanded Group A Plastic Commodities Up to 20 ft (6.1 m) in Height in Up to a 25 ft (7.6 m) High Building — Option 1.*

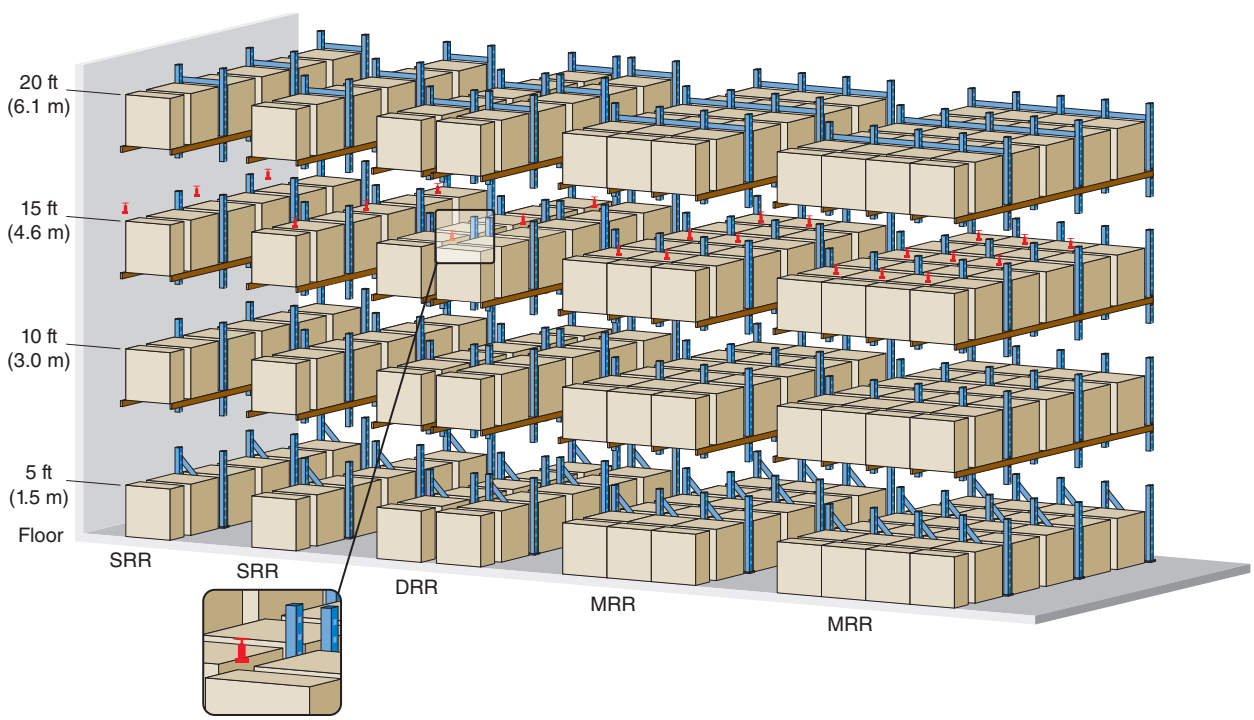

EXHIBIT 25.39 *Positioning of In-Rack Sprinklers in Accordance with Figure 25.9.3.3(e). (Courtesy of Stephan Laforest)*

EDUFIRE.IR

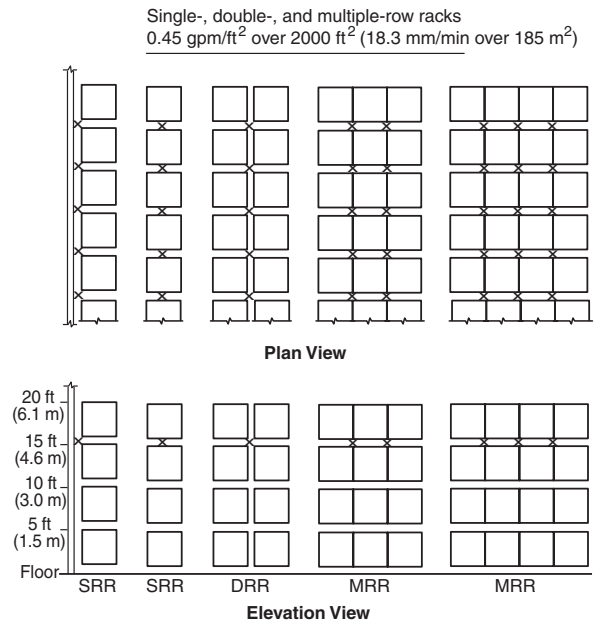

Note: Each square represents a storage cube measuring 4 ft to 5 ft (1.2 m to 1.5 m) on a side. Actual load heights can vary from approximately 18 in. to 10 ft (450 mm to 3.0 m). Therefore, there could be as few as one load or as many as six or seven loads between in-rack sprinklers that are spaced 10 ft (3.0 m) apart vertically.

FIGURE 25.9.3.3(f) *In-Rack Sprinkler Arrangement, Exposed Nonexpanded Group A Plastic Commodities Up to 20 ft (6.1 m) in Height in Up to a 25 ft (7.6 m) High Building — Option 2.*

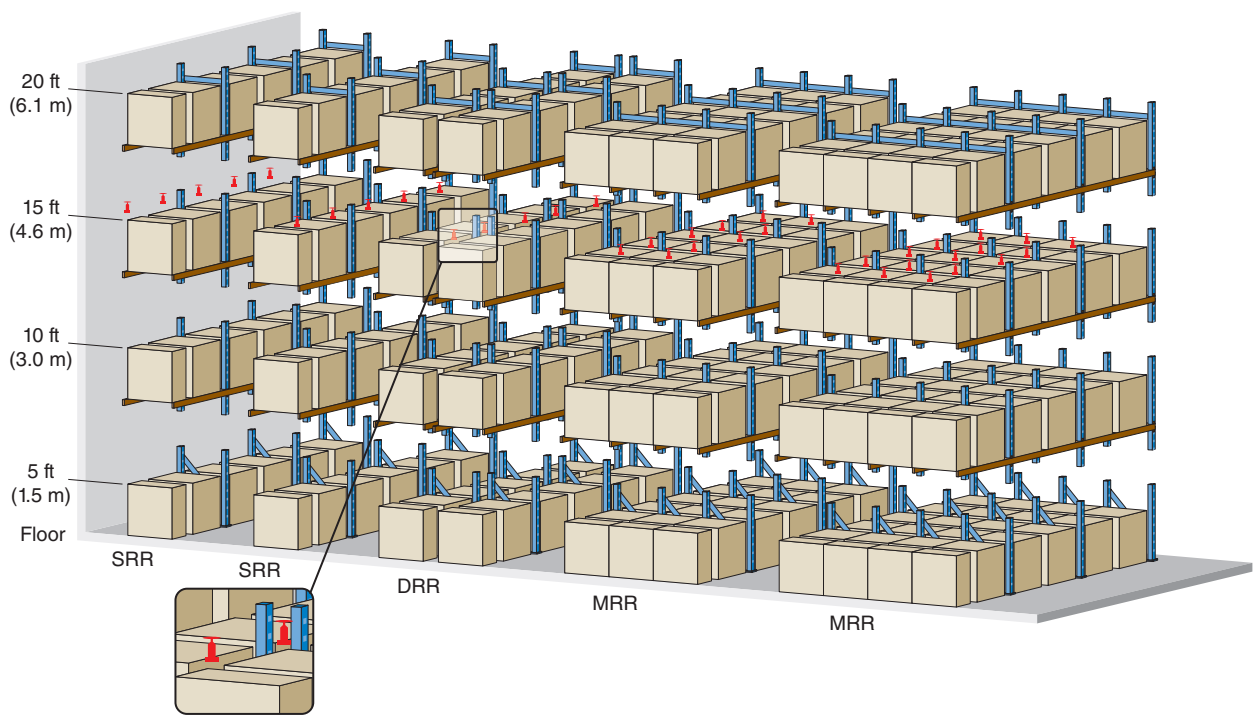

EXHIBIT 25.40 *Positioning of In-Rack Sprinklers in Accordance with Figure 25.9.3.3(f). (Courtesy of Stephan Laforest)*

EDUFIRE.IR

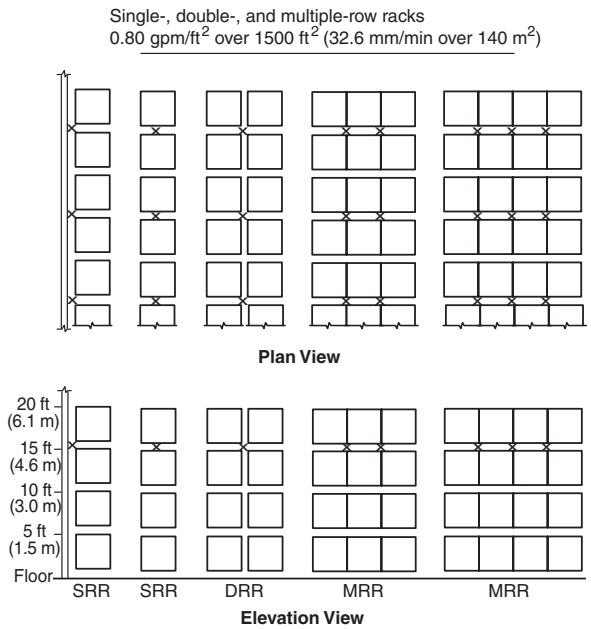

Note: Each square represents a storage cube measuring 4 ft to 5 ft (1.2 m to 1.5 m) on a side. Actual load heights can vary from approximately 18 in. to 10 ft (450 mm to 3.0 m). Therefore, there could be as few as one load or as many as six or seven loads between in-rack sprinklers that are spaced 10 ft (3.0 m) apart vertically.

FIGURE 25.9.3.3(g) *In-Rack Sprinkler Arrangement, Exposed Nonexpanded Group A Plastic Commodities Up to 20 ft (6.1 m) in Height in Up to a 30 ft (9.1 m) High Building — Option 1.*

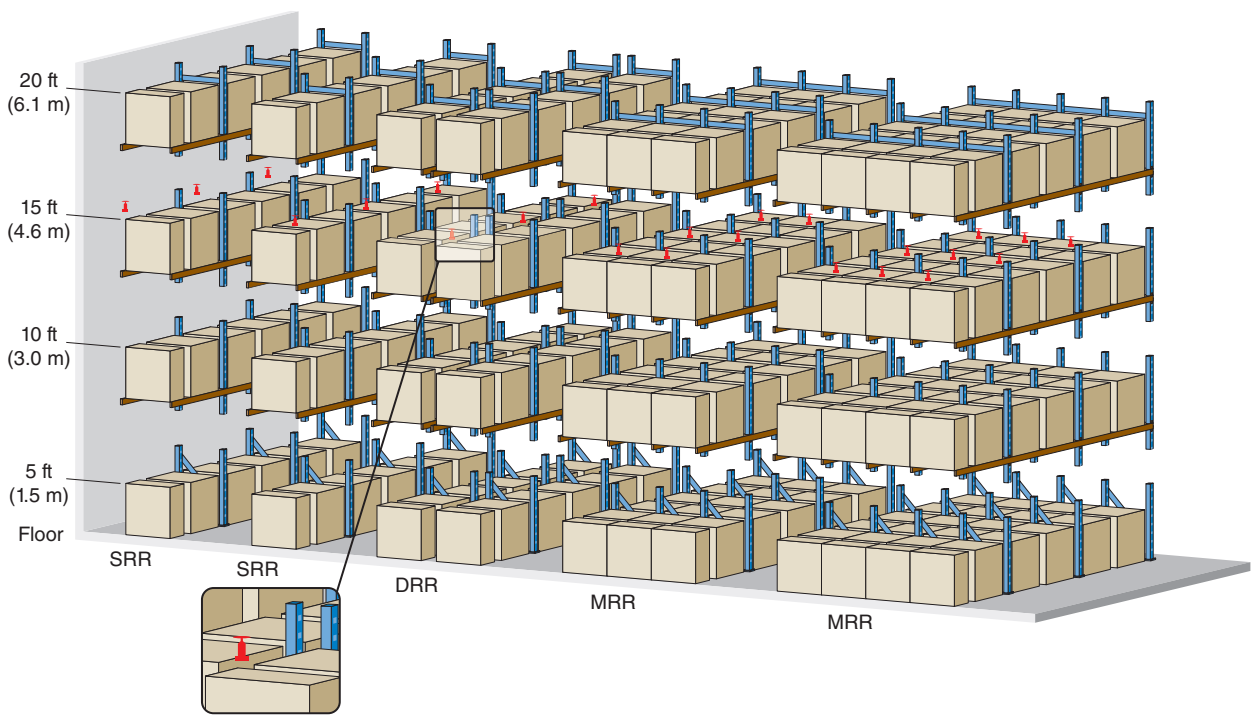

EXHIBIT 25.41 *Positioning of In-Rack Sprinklers in Accordance with Figure 25.9.3.3(g). (Courtesy of Stephan Laforest)*

EDUFIRE.IR

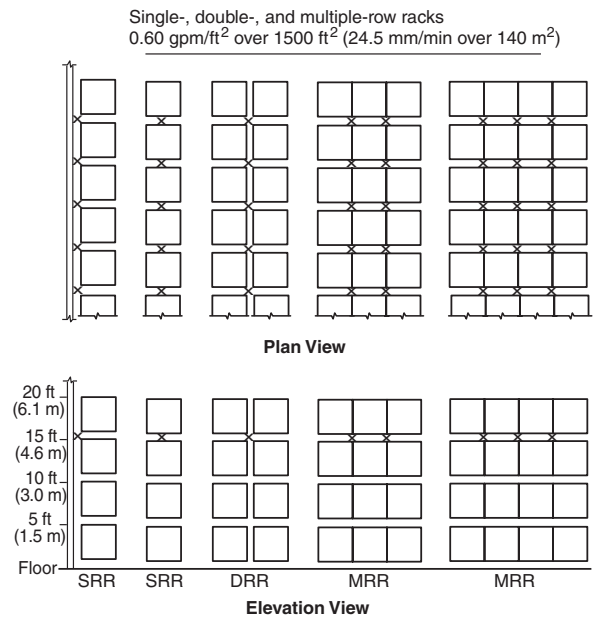

Note: Each square represents a storage cube measuring 4 ft to 5 ft (1.2 m to 1.5 m) on a side. Actual load heights can vary from approximately 18 in. to 10 ft (450 mm to 3.0 m). Therefore, there could be as few as one load or as many as six or seven loads between in-rack sprinklers that are spaced 10 ft (3.0 m) apart vertically.

FIGURE 25.9.3.3(h) *In-Rack Sprinkler Arrangement, Exposed Nonexpanded Group A Plastic Commodities Up to 20 ft (6.1 m) in Height in Up to a 30 ft (9.1 m) High Building — Option 2.*

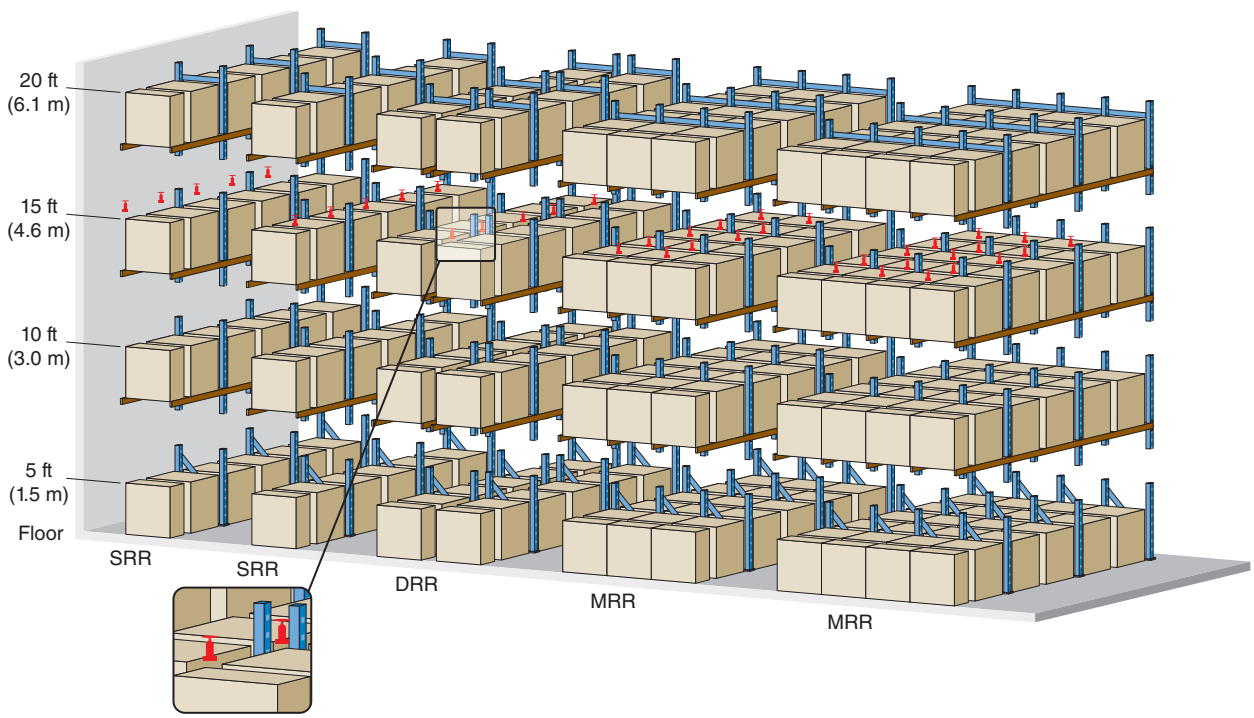

EXHIBIT 25.42 *Positioning of In-Rack Sprinklers in Accordance with Figure 25.9.3.3(h). (Courtesy of Stephan Laforest)*

EDUFIRE.IR

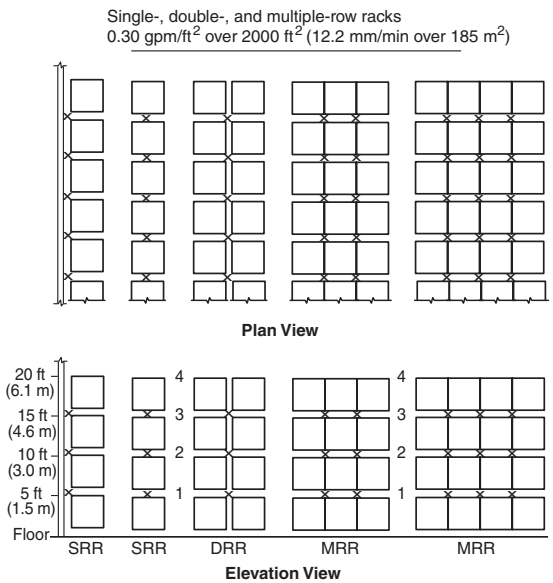

Note: Each square represents a storage cube measuring 4 ft to 5 ft (1.2 m to 1.5 m) on a side. Actual load heights can vary from approximately 18 in. to 10 ft (450 mm to 3.0 m). Therefore, there could be as few as one load or as many as six or seven loads between in-rack sprinklers that are spaced 10 ft (3.0 m) apart vertically.

Sprinklers labeled 1 and 3, 2 and 3, or 2 and 4 shall be required when the storage height exceeds 15 ft (4.6 m) but does not exceed 20 ft (6.1m)

FIGURE 25.9.3.3(i) *In-Rack Sprinkler Arrangement, Exposed Nonexpanded Group A Plastic Commodities Up to 20 ft (6.1 m) in Height in Up to a 30 ft (9.1 m) High Building — Option 3.*

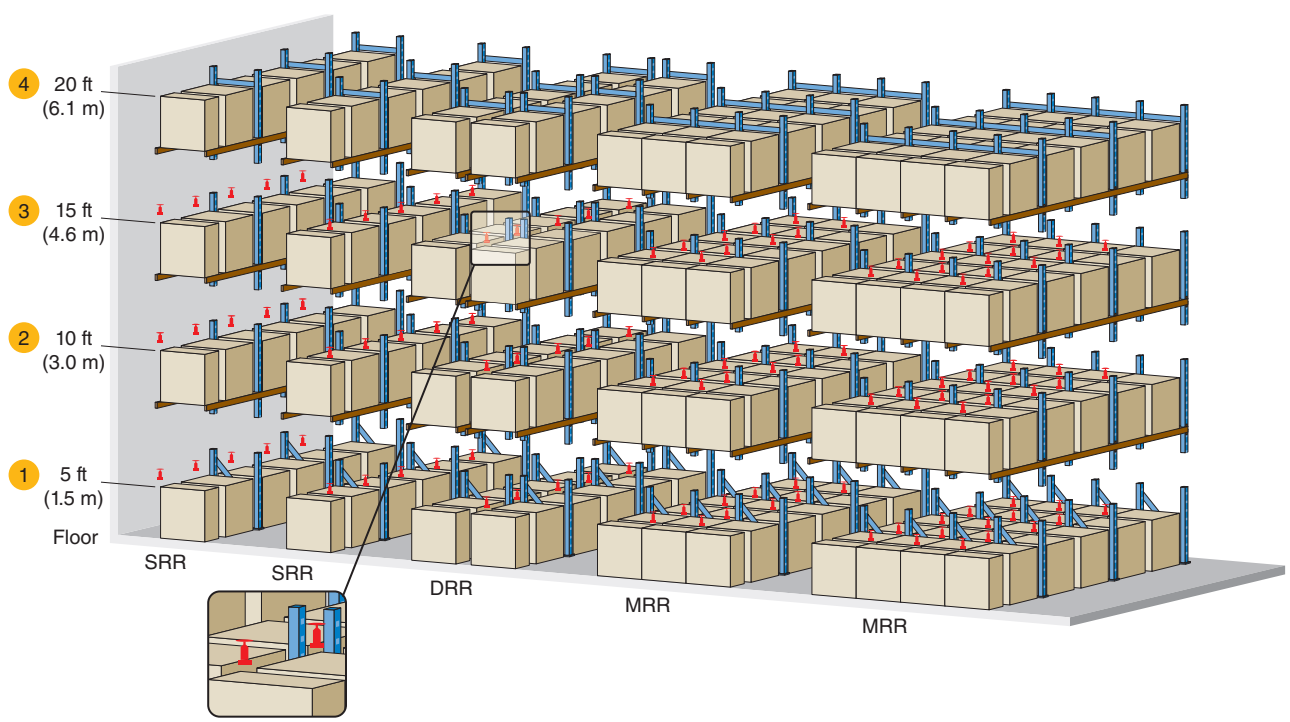

EXHIBIT 25.43 *Positioning of In-Rack Sprinklers in Accordance with Figure 25.9.3.3(i). (Courtesy of Stephan Laforest)*

Automatic Sprinkler Systems Handbook 2019

EDUFIRE.IR

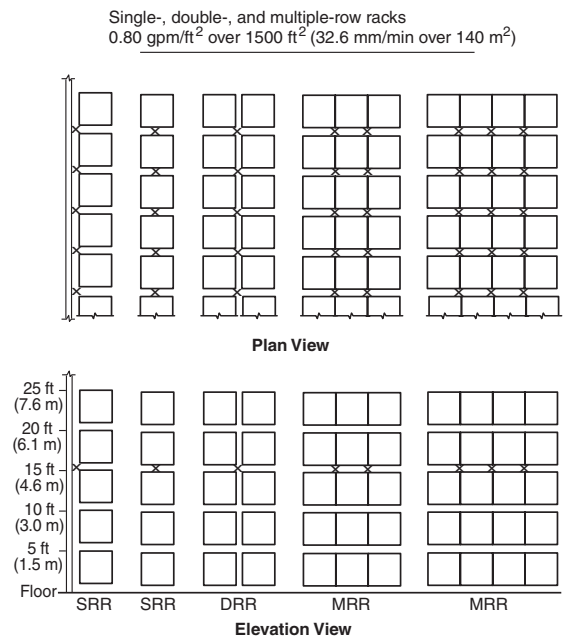

Note: Each square represents a storage cube measuring 4 ft to 5 ft (1.2 m to 1.5 m) on a side. Actual load heights can vary from approximately 18 in. to 10 ft (450 mm to 3.0 m). Therefore, there could be as few as one load or as many as six or seven loads between in-rack sprinklers that are spaced 10 ft (3.0 m) apart vertically.

FIGURE 25.9.3.3(j) *In-Rack Sprinkler Arrangement, Exposed Nonexpanded Group A Plastic Commodities Up to 25 ft (7.6 m) in Height in Up to a 35 ft (11 m) High Building — Option 1.*

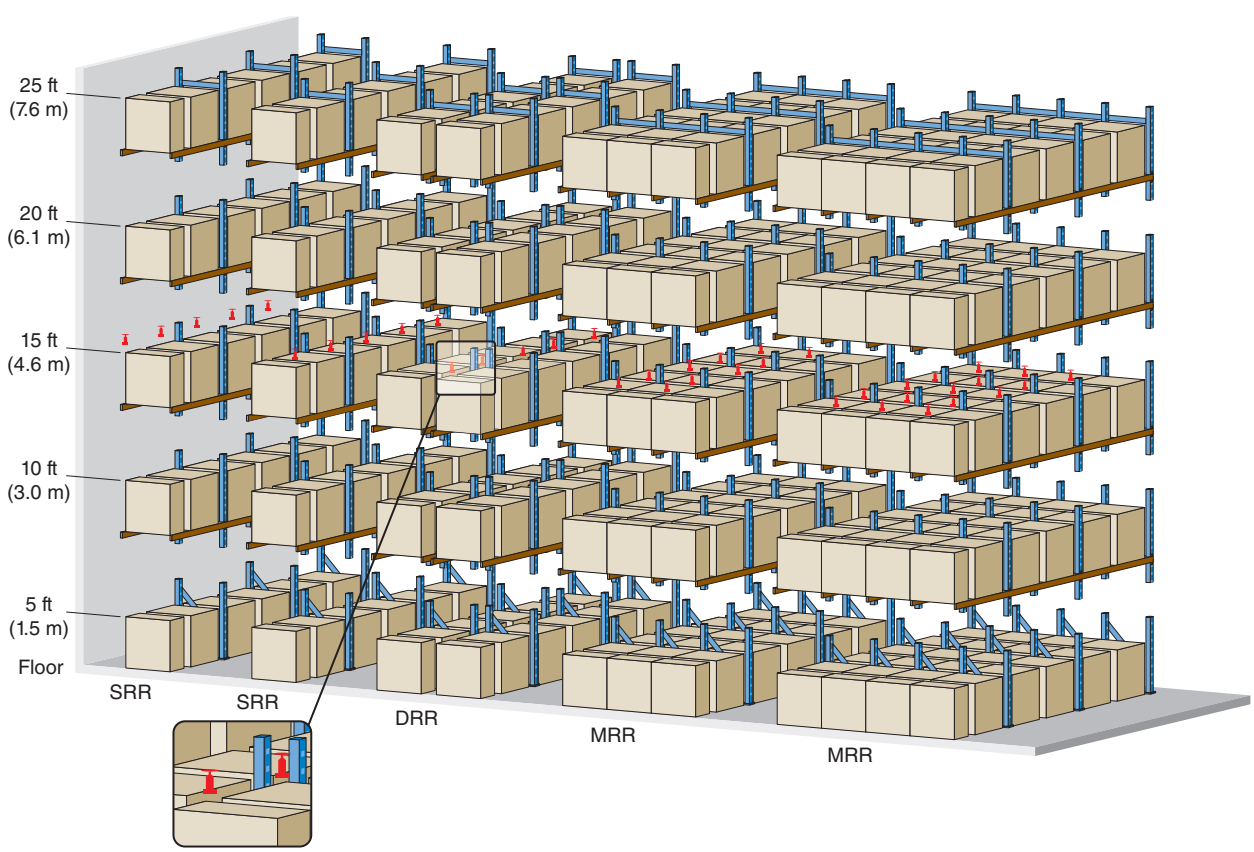

EXHIBIT 25.44 *Positioning of In-Rack Sprinklers in Accordance with Figure 25.9.3.3(j). (Courtesy of Stephan Laforest)*

EDUFIRE.IR

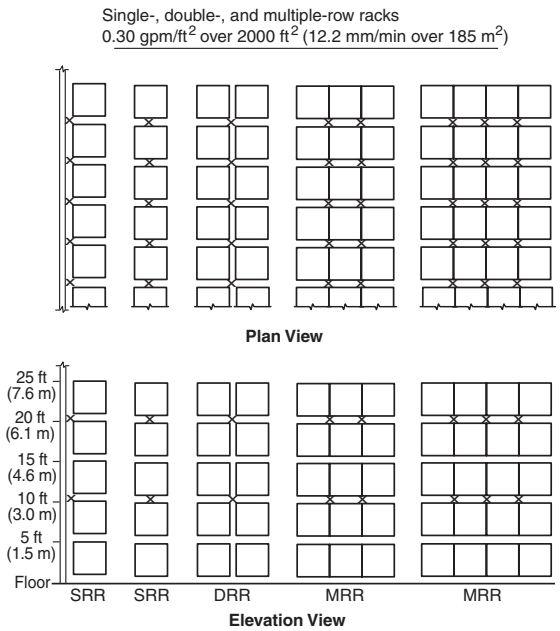

Note: Each square represents a storage cube measuring 4 ft to 5 ft (1.2 m to 1.5 m) on a side. Actual load heights can vary from approximately 18 in. to 10 ft (450 mm to 3.0 m). Therefore, there could be as few as one load or as many as six or seven loads between in-rack sprinklers that are spaced 10 ft (3.0 m) apart vertically.

FIGURE 25.9.3.3(k) *In-Rack Sprinkler Arrangement, Exposed Nonexpanded Group A Plastic Commodities Up to 25 ft (7.6 m) in Height in Up to a 35 ft (11 m) High Building — Option 2.*

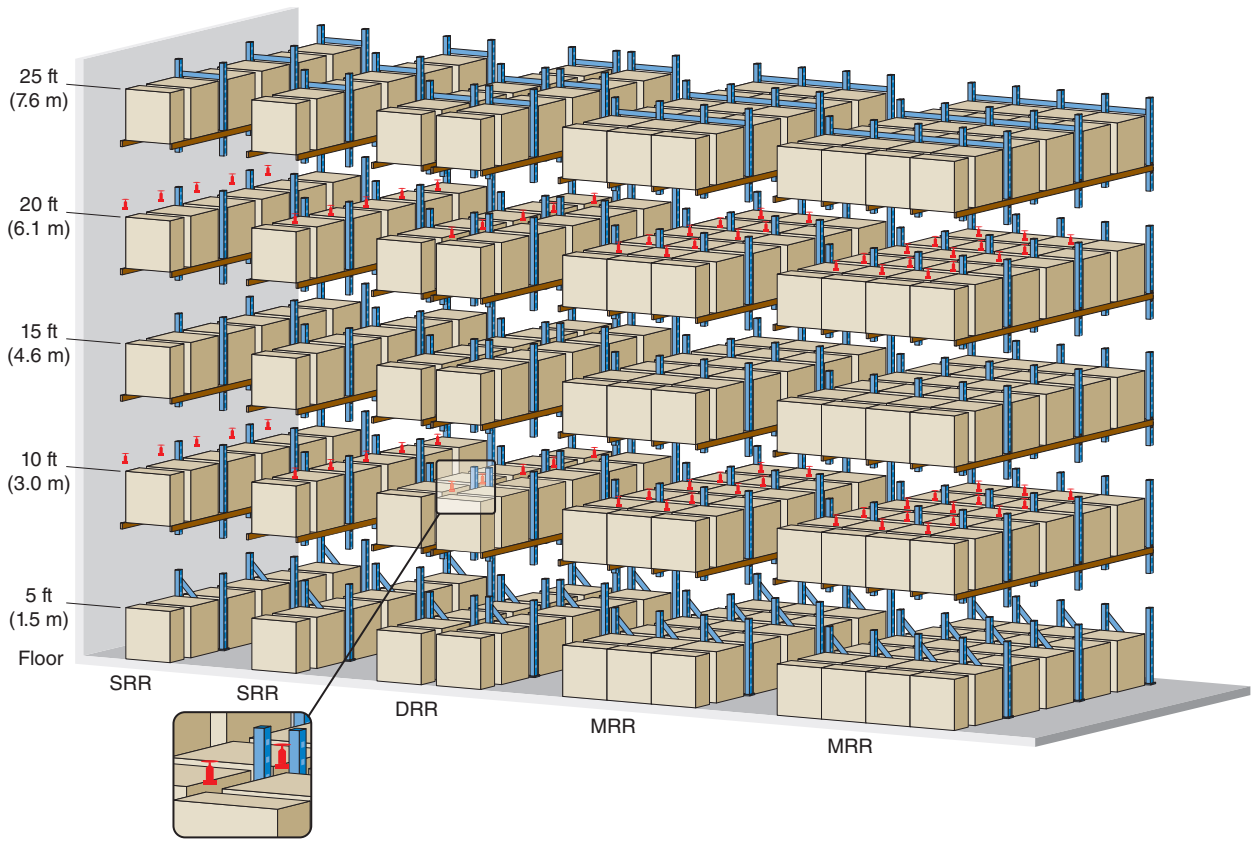

EXHIBIT 25.45 *Positioning of In-Rack Sprinklers in Accordance with Figure 25.9.3.3(k). (Courtesy of Stephan Laforest)*

EDUFIRE.IR

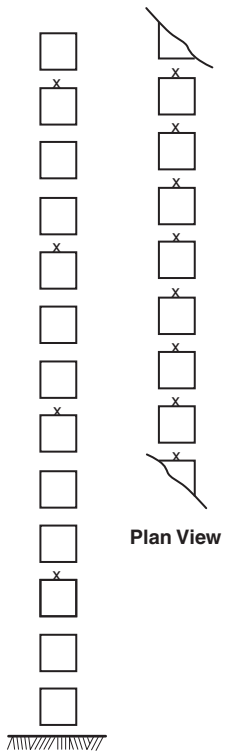

Note: Each square represents a storage cube measuring 4 ft to 5 ft (1.2 m to 1.5 m) on a side. Actual load heights can vary from approximately 18 in. (450 mm) up to 10 ft (3.0 m). Therefore, there could be as few as one load or as many as six or seven loads between in-rack sprinklers that are spaced 10 ft (3.0 m) apart vertically.

FIGURE 25.9.4.1.1(a) *In-Rack Sprinkler Arrangement, Cartoned Group A Plastic Commodities, Single-Row Racks, Storage Height Over 25 ft (7.6 m) — Option 1.*

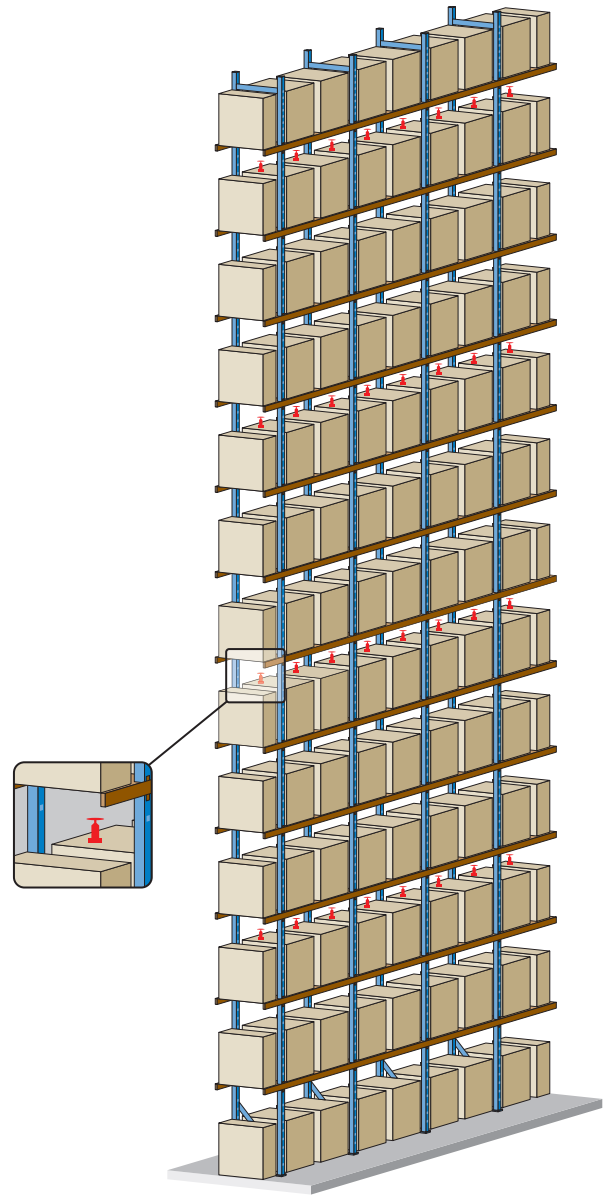

EXHIBIT 25.46 *Positioning of In-Rack Sprinklers in Accordance with Figure 25.9.4.1.1(a). (Courtesy of Stephan Laforest)*

25.9.4 Rack Storage of Group A Plastic Commodities Over 25 ft (7.6 m) in Height.

25.9.4.1 Single-Row Racks.

For single-row rack storage of Group A plastic commodities stored over 25 ft (7.6 m) in height, except for the protection of exposed nonexpanded Group A plastics, see 25.3.5 to obtain the allowable ceiling designs. The allowable ceiling design for exposed nonexpanded Group A plastics is provided in 25.9.4.1.3. For the allowable horizontal and vertical in-rack sprinkler locations, see Figure 25.9.4.1.1(a) through Figure 25.9.4.1.1(d) for single-row racks containing cartoned Group A plastics or Figure 25.9.4.1.3 for single-row racks containing exposed nonexpanded Group A plastics. Also see Sections 25.4 through 25.7 for additional requirements.

EDUFIRE.IR

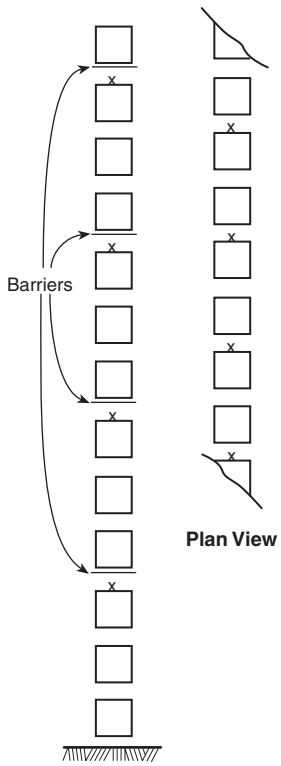

Note: Each square represents a storage cube measuring 4 ft to 5 ft (1.2 m to 1.5 m) on a side. Actual load heights can vary from approximately 18 in. (450 mm) up to 10 ft (3.0 m). Therefore, there could be as few as one load or as many as six or seven loads between in-rack sprinklers that are spaced 10 ft (3.0 m) apart vertically.

FIGURE 25.9.4.1.1(b) *In-Rack Sprinkler Arrangement, Cartoned Group A Plastic Commodities, Single-Row Racks, Storage Height Over 25 ft (7.6 m) — Option 2.*

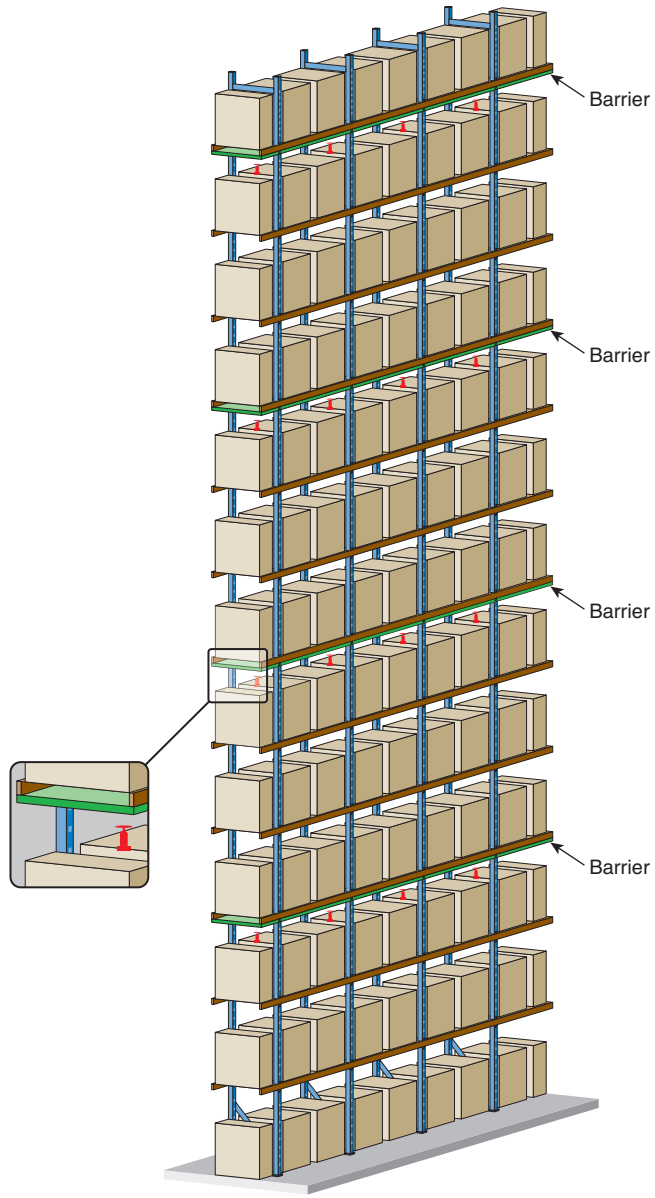

EXHIBIT 25.47 *Positioning of In-Rack Sprinklers in Accordance with Figure 25.9.4.1.1(b). (Courtesy of Stephan Laforest)*

25.9.4.1.1 Where single-row rack storage of cartoned Group A plastic commodities, expanded or nonexpanded, encapsulated or nonencapsulated, is over 25 ft (7.6 m) in height, in-rack sprinklers shall be arranged in accordance with one of the options in Figure 25.9.4.1.1(a) through Figure 25.9.4.1.1(d).

Exhibit 25.46 through Exhibit 25.49 illustrate the application of in-rack sprinkler requirements for Figure 25.9.4.1.1(a) through Figure 25.9.4.1.1(d).

25.9.4.1.2 Where a single-row rack of cartoned Group A plastic commodities is located against a wall, the in-rack sprinkler arrangement shall be permitted to be in accordance with Figure 25.9.4.2.1(a) or Figure 25.9.4.2.1(b).

EDUFIRE.IR

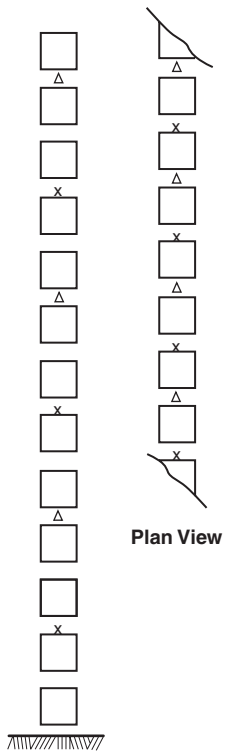

Note: Each square represents a storage cube measuring 4 ft to 5 ft (1.2 m to 1.5 m) on a side. Actual load heights can vary from approximately 18 in. (450 mm) up to 10 ft (3.0 m). Therefore, there could be as few as one load or as many as six or seven loads between in-rack sprinklers that are spaced 10 ft (3.0 m) apart vertically.

FIGURE 25.9.4.1.1(c) *In-Rack Sprinkler Arrangement, Cartoned Group A Plastic Commodities, Single-Row Racks, Storage Height Over 25 ft (7.6 m) — Option 3.*

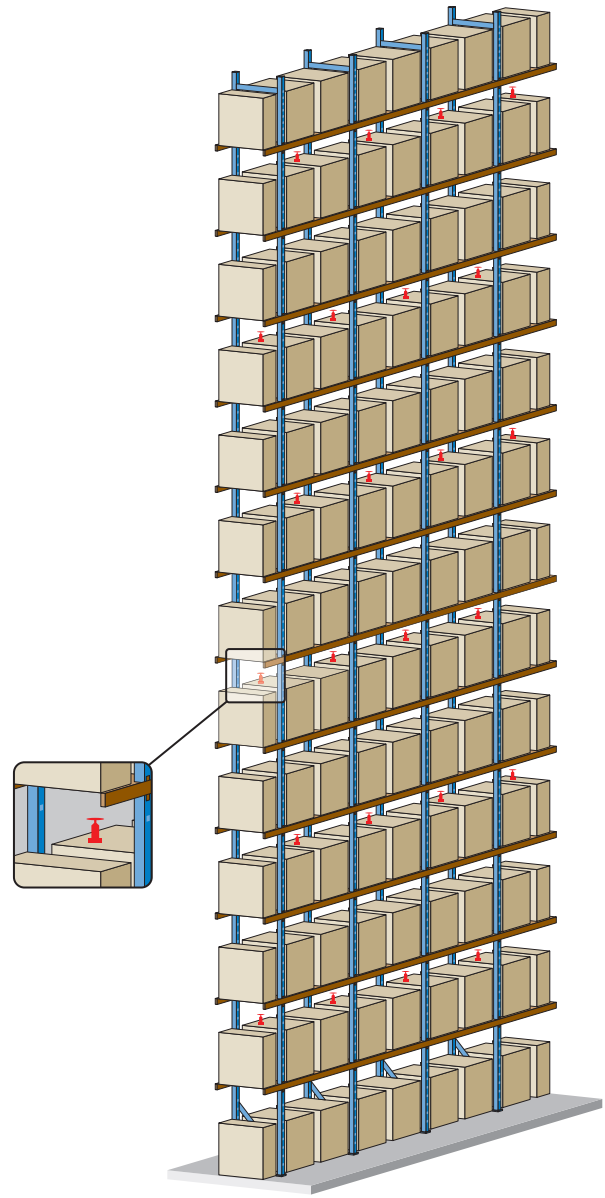

EXHIBIT 25.48 *Positioning of In-Rack Sprinklers in Accordance with Figure 25.9.4.1.1(c). (Courtesy of Stephan Laforest)*

25.9.4.1.3 Where single-row rack storage of exposed nonexpanded Group A plastic commodities, encapsulated or nonencapsulated, is over 25 ft (7.6 m) in height and the rack depth is a maximum 3 ft (0.9 m), in-rack sprinklers shall be arranged in accordance with Figure 25.9.4.1.3.

As indicated in 25.9.4.1.3, single-row open racks up to 3 ft (0.9 m) deep containing storage of exposed, nonexpanded Group A plastics over 25 ft (7.6 m) in height can be protected by the in-rack sprinkler arrangement shown in Figure 25.9.4.1.3. For single-row racks deeper than 3 ft (0.9 m), an in-rack sprinkler

EDUFIRE.IR

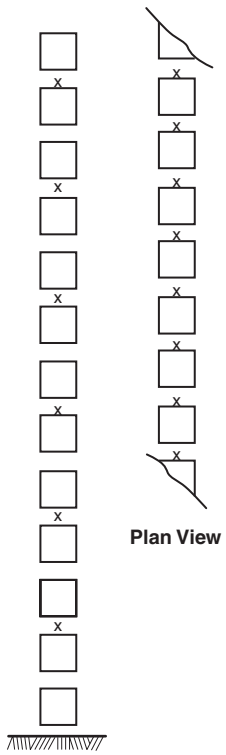

Note: Each square represents a storage cube measuring 4 ft to 5 ft (1.2 m to 1.5 m) on a side. Actual load heights can vary from approximately 18 in. (450 mm) up to 10 ft (3.0 m). Therefore, there could be as few as one load or as many as six or seven loads between in-rack sprinklers that are spaced 10 ft (3.0 m) apart vertically.

FIGURE 25.9.4.1.1(d) *In-Rack Sprinkler Arrangement, Cartoned Group A Plastic Commodities, Single-Row Racks, Storage Height Over 25 ft (7.6 m) — Option 4.*

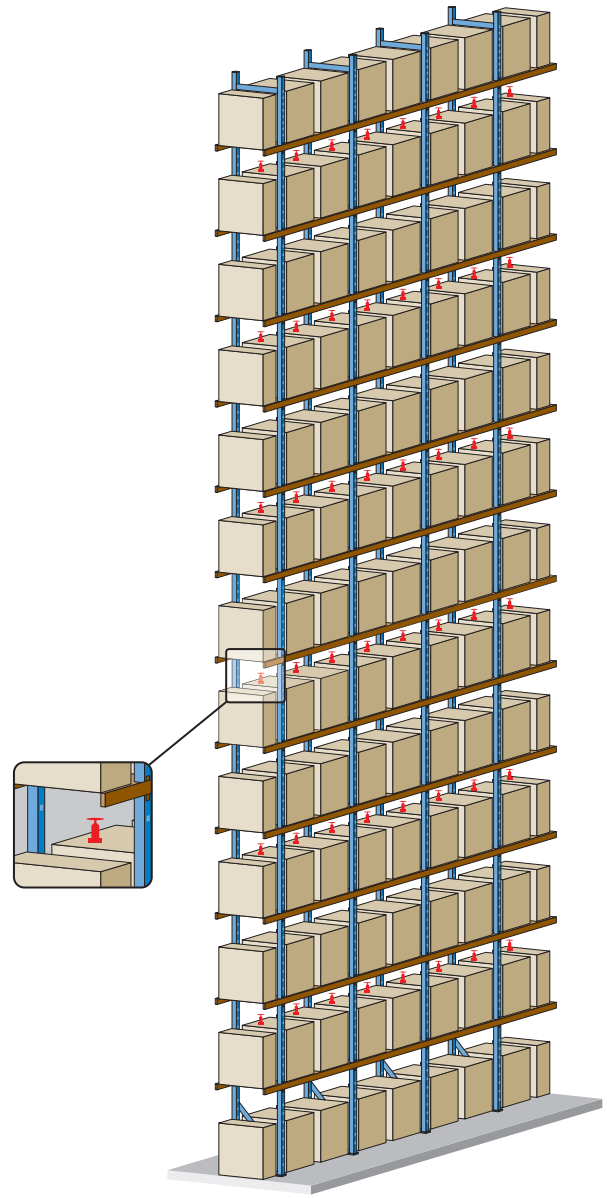

EXHIBIT 25.49 *Positioning of In-Rack Sprinklers in Accordance with Figure 25.9.4.1.1(d). (Courtesy of Stephan Laforest)*

protection arrangement from Section 25.8 must be chosen. Prior to the 2019 edition of NFPA 13, single-row open racks of any depth could use the in-rack sprinkler arrangement shown in Figure 25.9.4.1.3 for the protection of exposed, nonexpanded Group A plastics. For information regarding the Technical Committee on Sprinkler System Discharge's decision on changing this requirement, see the commentary provided for 25.9.4.2.2. Exhibit 25.50 illustrates the application of in-rack sprinkler requirements for Figure 25.9.4.1.3.

EDUFIRE.IR

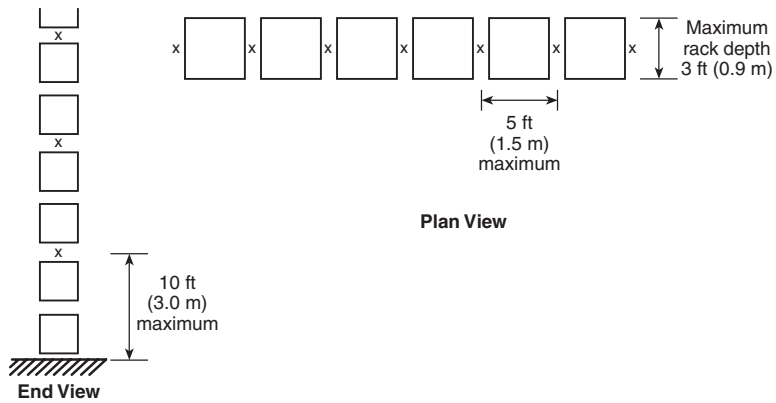

FIGURE 25.9.4.1.3 *In-Rack Sprinkler Arrangement, Exposed, Nonexpanded Group A Plastic Commodities, Single-Row Racks Up to 3 ft (0.9 m) Deep, Storage Height Over 25 ft (7.6 m).*

EXHIBIT 25.50 *Positioning of In-Rack Sprinvklers in Accordance with Figure 25.9.4.1.3. (Courtesy of Stephan Laforest)*

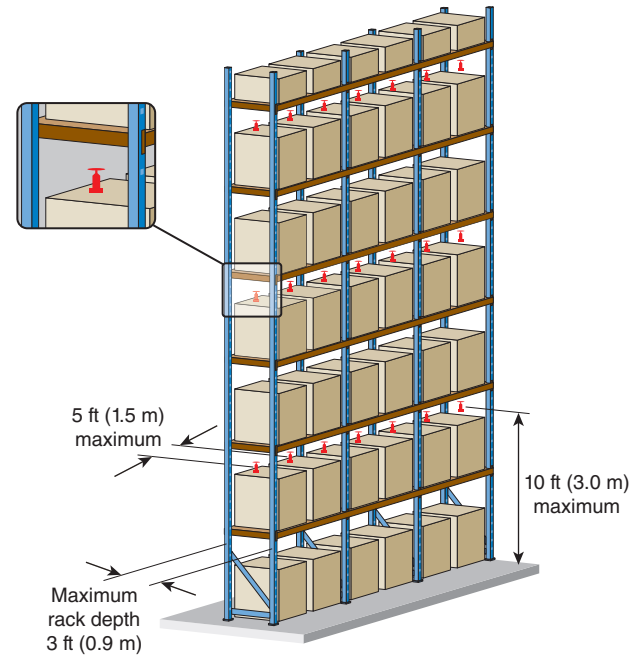

25.9.4.1.3.1 The highest level of in-rack sprinklers shall not be more than 10 ft (3.0 m) below the top of storage.

25.9.4.1.3.2 Where Figure 25.9.4.1.3 is used, aisles shall be at least 4 ft (1.2 m) wide and the ceiling sprinklers shall be designed for a minimum discharge density of 0.45 gpm/ft^2 over 2000 ft^2 (18.3 mm/min over 185 m^2).

EDUFIRE.IR

25.9.4.1.4 Where single-row rack storage of exposed nonexpanded Group A plastic commodities, encapsulated or nonencapsulated, is over 25 ft (7.6 m) in height and the rack depth is greater than 3 ft (0.9 m), in-rack sprinklers shall be arranged in accordance with Section 25.8.

As indicated in 25.9.4.1.3, single-row open racks up to 3 ft (0.9 m) deep containing storage of exposed, nonexpanded Group A plastics over 25 ft (7.6 m) in height can be protected by the in-rack sprinkler arrangement shown in Figure 25.9.4.1.3. For single-row racks deeper than 3 ft (0.9 m), an in-rack sprinkler protection arrangement from Section 25.8 must be chosen. For information regarding the Technical Committee on Sprinkler System Discharge's decision on this, see the commentary following 25.9.4.2.2.

25.9.4.2 Double-Row Racks.

For double-row rack storage of Group A plastic commodities stored over 25 ft (7.6 m) in height, see Section 25.2 to obtain the allowable ceiling designs. For the allowable horizontal and vertical in-rack sprinkler locations, see Figure 25.9.4.2.1(a) through Figure 25.9.4.2.1(c) for double-row racks containing cartoned Group A plastics. See Section 25.8 for the in-rack sprinkler requirements for the rack storage of exposed expanded Group A plastics. Also see Sections 25.4 through 25.7 for additional requirements.

25.9.4.2.1 Where double-row rack storage of cartoned Group A plastic commodities, expanded or nonexpanded, encapsulated or nonencapsulated, is over 25 ft (7.6 m) in height, in-rack sprinklers shall be arranged in accordance with one of the options in Figure 25.9.4.2.1(a) or Figure 25.9.4.2.1(b). Figure 25.9.4.2.1(c) shall be permitted to be used as an option for double-row racks up to 9 ft (2.7 m) deep.

Exhibit 25.51 through Exhibit 25.53 illustrate the application of in-rack sprinkler requirements for Figure 25.9.4.2.1(a) through Figure 25.9.4.2.1(c), respectively.

25.9.4.2.2* Where double-row rack storage of exposed nonexpanded Group A plastic commodities, whether encapsulated or nonencapsulated, is over 25 ft (7.6 m) in height and has minimum 4 ft (1.2 m) wide aisles, in-rack sprinklers shall be arranged in accordance with Section 25.8.

Prior to the 2019 edition of NFPA 13, exposed nonexpanded plastics stored in open racks up to 9 ft (2.7 m) deep were permitted to be protected by the in-rack sprinkler arrangement shown in Figure 25.9.4.2.1(c). This protection scheme was based on a successful full-scale fire test using the in-rack sprinkler arrangement in Figure 25.9.4.2.1(c) to protect the standard plastic test commodity that was maintained to 55 ft (16.8 m) high in a double-row open rack. At the time of the test (December 1991), the standard plastic test commodity was typically used; CMDA sprinklers were installed at ceiling level, to represent the protection requirements not only for cartoned expanded and nonexpanded Group A plastics but also for exposed, nonexpanded Group A plastics. However, full-scale fire testing conducted by FM Global in the mid-2000s led to concerns that the protection requirements for exposed, nonexpanded Group A plastics could be significantly higher than those for cartoned Group A plastics.

To determine if double-row open rack storage of exposed, nonexpanded Group A plastics could be protected by the in-rack sprinkler arrangement in Figure 25.9.4.2.1(c), a full-scale fire test was conducted on May 12, 2014, at the Large Burn Lab of FM Global's Research Campus in West Glocester, Rhode Island, and documented in the technical report *Large-Scale Validation of (1) In-Rack Automatic Sprinkler Designs for Open-Frame Rack Storage Using Quick-Response, Pendent K200 lpm/bar$^{1/2}$ (K14.0 gpm/psi$^{1/2}$) and Larger Sprinklers, and (2) Protection of Uncartoned Unexpanded Plastics in Open-Frame Double-Row Racks Using Two Different In-Rack Sprinkler Protection Arrangements*. Storage on exposed, nonexpanded Group A plastic was maintained to 40 ft (12.2 m) high in a double-row main array rack and two single-row target array racks separated from the double-row rack by a 4 ft (1.2 m) wide aisle. The storage racks were equipped with quick-response, 165°F (74°C) rated, K-8.0 (K-115) pendent in-rack sprinklers that were installed in the longitudinal flue space on 4 ft (1.2 m) horizontal and 10 ft (3.0 m) vertical spacing. They were positioned at each longitudinal/transverse flue space intersection and arranged to discharge a minimum flow of 30 gpm (114 L/min). The movable north ceiling of the Large Burn Lab was set at an elevation of 50 ft (15.2 m) and provided with standard-response, 155°F (68°C) rated, K-5.6 (K-80) upright sprinklers installed on 10 ft x 10 ft

EDUFIRE.IR

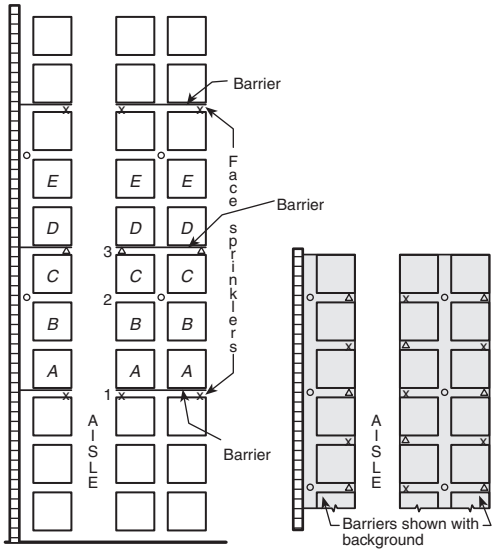

Notes:
1. Sprinklers and barriers labeled 1 shall be required where loads labeled *A* or *B* represent top of storage.
2. Sprinklers labeled 1 and 2 and barriers labeled 1 shall be required where loads labeled *C* represent top of storage.
3. Sprinklers and barriers labeled 1 and 3 shall be required where loads labeled *D* or *E* represent top of storage.
4. For storage higher than represented by loads labeled *E*, the cycle defined by Notes 2 and 3 is repeated.
5. Symbol Δ or x indicates face sprinklers on vertical or horizontal stagger.
6. Symbol o indicates longitudinal flue space sprinklers.
7. Each square represents a storage cube measuring 4 ft to 5 ft (1.2 m to 1.5 m) on a side. Actual load heights can vary from approximately 18 in. (450 mm) up to 10 ft (3.0 m). Therefore, there could be as few as one load or as many as six or seven loads between in-rack sprinklers that are spaced 10 ft (3.0 m) apart vertically.

FIGURE 25.9.4.2.1(a) *In-Rack Sprinkler Arrangement, Cartoned Group A Plastic Commodities, Double-Row Racks, Storage Height Over 25 ft (7.6 m) — Option 1.*

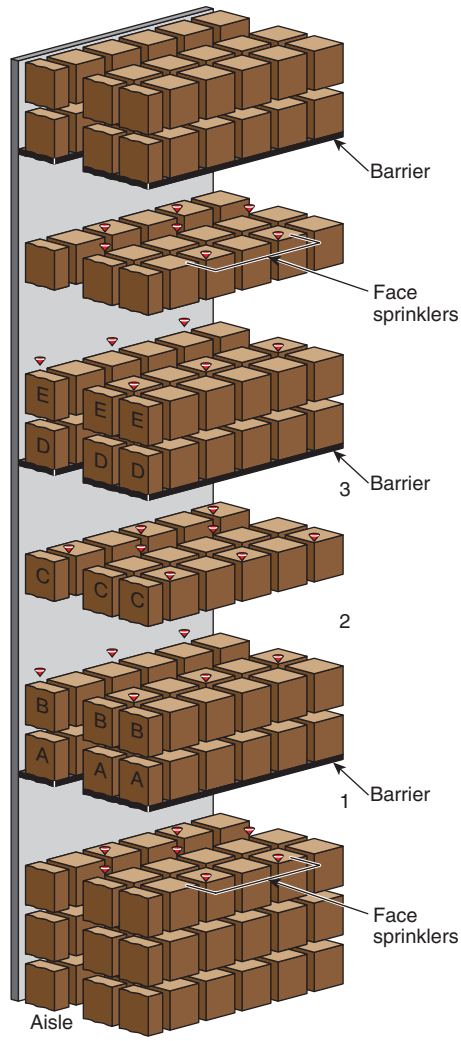

EXHIBIT 25.51 *Positioning of In-Rack Sprinklers in Accordance with Figure 25.9.4.2.1(a). (Courtesy Tyco Fire Products LP)*

(3.0 m x 3.0 m) spacing and arranged to provide a minimum pressure of 11 psi (0.8 bar). The ignition was at the rack face, at the midpoint between transverse flue spaces, and between two ceiling-level sprinklers. The in-rack sprinkler protection proved to be ineffective because, at the time of test termination (15:00 minutes after ignition), every sprinkler installed at ceiling-level (56 sprinklers) operated along with 8 in-rack sprinklers (7 in the main array and 1 in a target array) and failed to provide fire control.

It was concluded that the test failed mainly due to an insufficient amount of water getting to the face of the rack in a timely fashion. It is important to note that (1) exposed Group A plastics do not absorb water and thus cannot be pre-wetted and (2) exposed, nonexpanded plastics do not tend to burn horizontally very quickly. Based on that second finding, a fire that originates at the face of the rack would tend to stay there and not activate in-rack sprinklers in the longitudinal flue space in a timely manner. As a result, it is important that the in-rack sprinkler protection arrangement for exposed, nonexpanded Group A plastic be arranged not only to operate in a timely manner but also to be able to provide a substantial amount of

EDUFIRE.IR

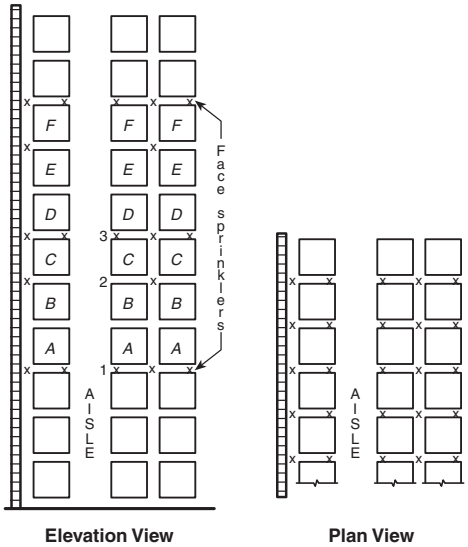

Notes:
1. Sprinklers labeled 1 shall be required where loads labeled *A* or *B* represent top of storage.
2. Sprinklers labeled 1 and 2 shall be required where loads labeled *C* represent top of storage.
3. Sprinklers labeled 1 and 3 shall be required where loads labeled *D* or *E* represent top of storage.
4. For storage higher than loads labeled *F*, the cycle defined by Notes 2 and 3 is repeated.
5. Symbol x indicates face and in-rack sprinklers.
6. Each square represents a storage cube measuring 4 ft to 5 ft (1.2 m to 1.5 m) on a side. Actual load heights can vary from approximately 18 in. (450 mm) up to 10 ft (3.0 m). Therefore, there could be as few as one load or as many as six or seven loads between in-rack sprinklers that are spaced 10 ft (3.0 m) apart vertically.

FIGURE 25.9.4.2.1(b) *In-Rack Sprinkler Arrangement, Cartoned Group A Plastic Commodities, Double-Row Racks, Storage Height Over 25 ft (7.6 m) — Option 2.*

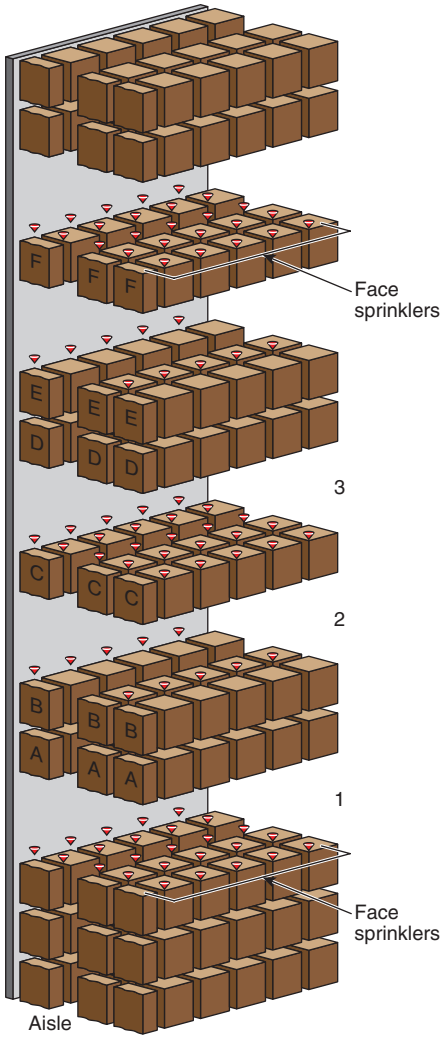

EXHIBIT 25.52 *Positioning of In-Rack Sprinklers in Accordance with Figure 25.9.4.2.1(b). (Courtesy Tyco Fire Products LP)*

water to all areas of the storage area. For that reason, exposed, nonexpanded Group A plastics are not permitted to be protected by standard-coverage in-rack sprinklers in single-row racks more than 3 ft (0.9 m) wide nor in double-row racks where the in-rack sprinklers are in the longitudinal flue space and not supplemented with face sprinklers.

A.25.9.4.2.2 All arrangements of exposed nonexpanded Group A plastic commodities cannot be protected with all types of sprinklers. Only certain combinations of ceiling sprinklers and in-rack sprinklers have been found to provide acceptable protection.

25.9.4.2.3 Protection of Group A plastic commodities that are exposed and nonexpanded, whether encapsulated or nonencapsulated racks and with a clearance to ceiling up to and including 10 ft (3.1 m), shall be permitted to only use in-rack sprinkler arrangements that are specifically permitted to be used with exposed nonexpanded Group A plastic commodities.

EDUFIRE.IR

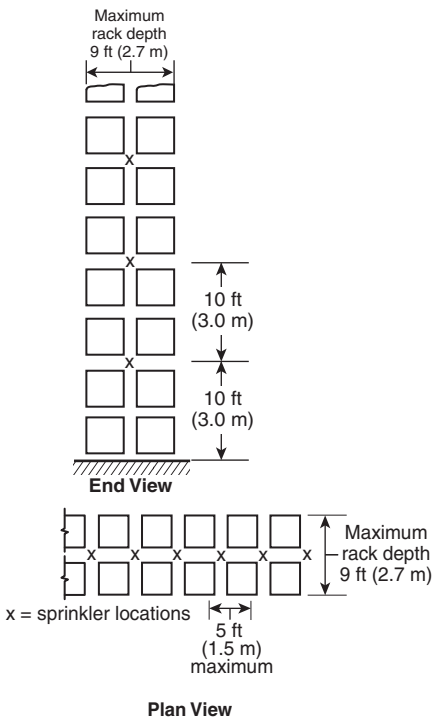

FIGURE 25.9.4.2.1(c) In-Rack Sprinkler Arrangement, Cartoned Group A Plastic Commodities, Double-Row Racks, Storage Height Over 25 ft (7.6 m) — Option 3.

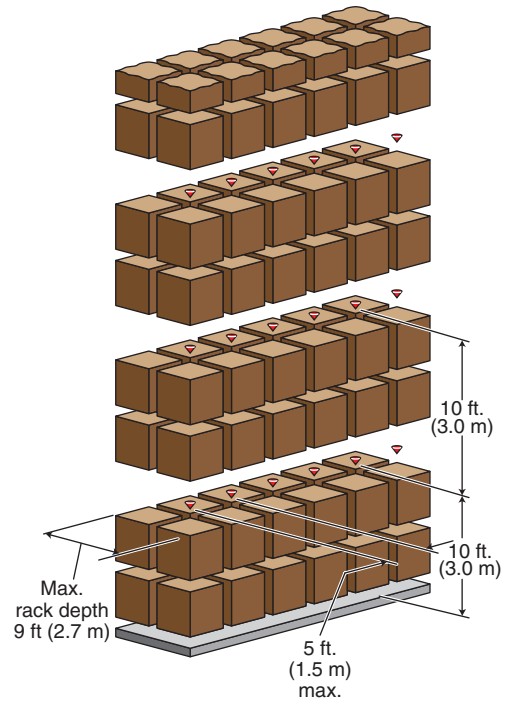

EXHIBIT 25.53 Positioning of In-Rack Sprinklers in Accordance with Figure 25.9.4.2.1(c). (Courtesy Tyco Fire Products LP)

25.9.4.3 Multiple-Row Racks.

For multiple-row rack storage of exposed nonexpanded and cartoned Group A plastic commodities stored over 25 ft (7.6 m) in height, see Section 25.2 to obtain the allowable ceiling designs. For the allowable horizontal and vertical in-rack sprinkler locations, see Figures 25.9.4.3.1(a) through 25.9.4.3.1(f). See Section 25.8 for the in-rack sprinkler requirements for the rack storage of exposed expanded Group A plastics. Also see Sections 25.4 through 25.7 for additional requirements.

25.9.4.3.1* Where multiple-row rack storage of exposed nonexpanded Group A plastic commodities, encapsulated or nonencapsulated, or cartoned Group A plastic commodities, expanded or nonexpanded, encapsulated or nonencapsulated, is over 25 ft (7.6 m) in height, in-rack sprinklers shall be arranged in accordance with one of the options in Figure 25.9.4.3.1(a) through Figure 25.9.4.3.1(f).

Exhibit 25.54 through Exhibit 25.59 illustrate the application of in-rack sprinkler requirements for Figure 25.9.4.3.1(a) through Figure 25.9.4.3.1(f), respectively.

A.25.9.4.3.1 All arrangements of exposed nonexpanded Group A plastic commodities cannot be protected with all types of sprinklers. Only certain combinations of ceiling sprinklers and in-rack sprinklers have been found to provide acceptable protection.

EDUFIRE.IR

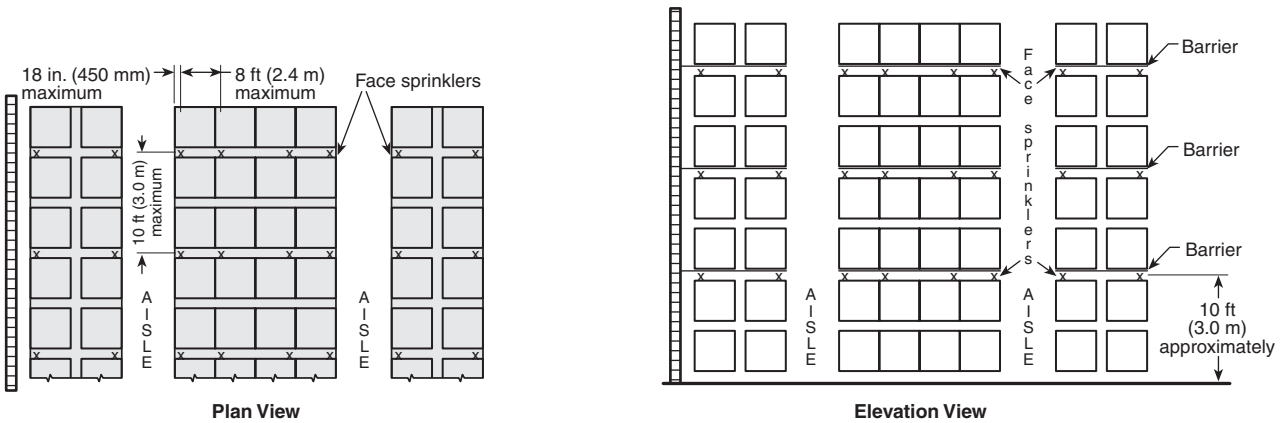

Note: Each square represents a storage cube measuring 4 ft to 5 ft (1.2 m to 1.5 m) on a side. Actual load heights can vary from approximately 18 in. (450 mm) up to 10 ft (3.0 m). Therefore, there could be as few as one load or as many as six or seven loads between in-rack sprinklers that are spaced 10 ft (3.0 m) apart vertically.

FIGURE 25.9.4.3.1(a) *In-Rack Sprinkler Arrangement, Cartoned Group A Plastic and Exposed Nonexpanded Group A Plastic Commodities, Multiple-Row Racks, Storage Height Over 25 ft (7.6 m) — Option 1 [10 ft (3.0 m) Maximum Spacing].*

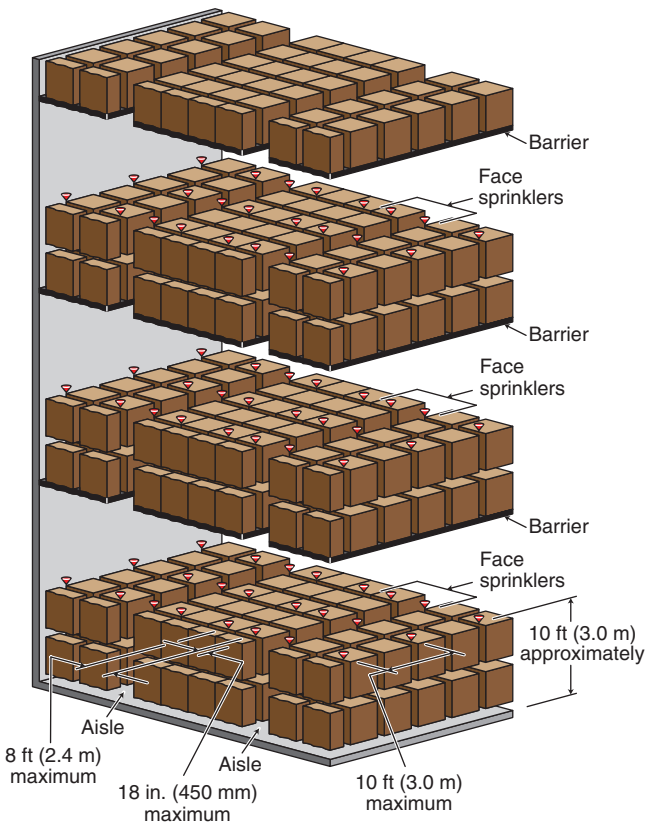

EXHIBIT 25.54 *Positioning of In-Rack Sprinklers in Accordance with Figure 25.9.4.3.1(a). (Courtesy Tyco Fire Products LP)*

EDUFIRE.IR

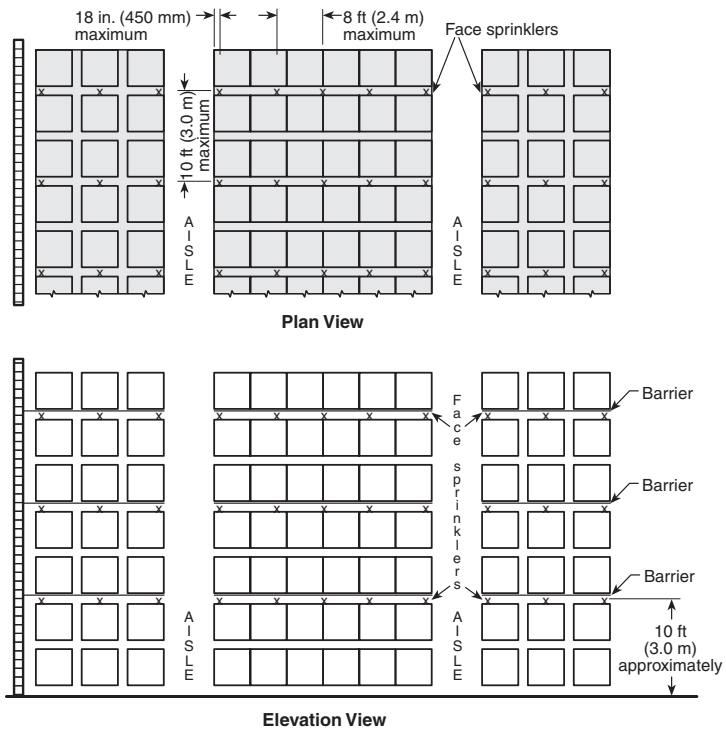

Note: Each square represents a storage cube measuring 4 ft to 5 ft (1.2 m to 1.5 m) on a side. Actual load heights can vary from approximately 18 in. (450 mm) up to 10 ft (3.0 m). Therefore, there could be as few as one load or as many as six or seven loads between in-rack sprinklers that are spaced 10 ft (3.0 m) apart vertically.

FIGURE 25.9.4.3.1(b) *In-Rack Sprinkler Arrangement, Cartoned Group A Plastic and Exposed Nonexpanded Group A Plastic Commodities, Multiple-Row Racks, Storage Height Over 25 ft (7.6 m) — Option 2 [10 ft (3.0 m) Maximum Spacing].*

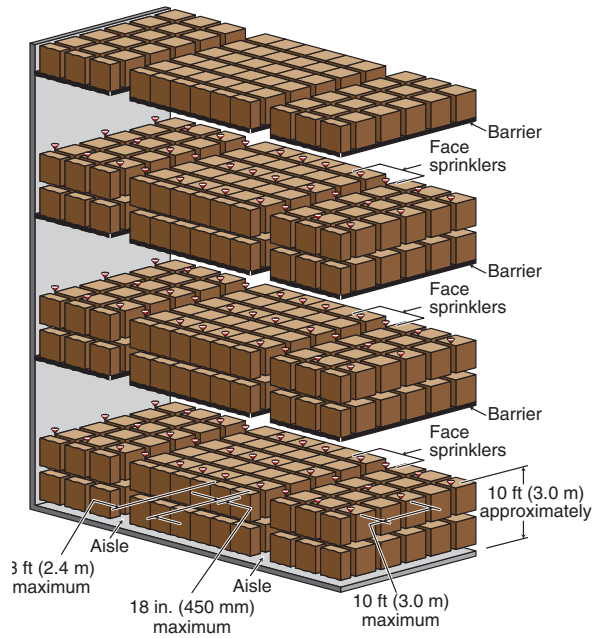

EXHIBIT 25.55 *Positioning of In-Rack Sprinklers in Accordance with Figure 25.9.4.3.1(b). (Courtesy Tyco Fire Products LP)*

25.9.5 In-Rack Sprinkler Arrangements Due to Excessive Clearance.

25.9.5.1 Where the clearance to ceiling for rack storage of Class 1 through Class IV commodities up to and including 25 ft (7.6 m) in height protected by CMDA ceiling-level sprinklers exceeds 20 ft (6.1 m) and the ceiling-level protection is not capable of providing the protection needed for the storage height that would result in a clearance to ceiling of 20 ft (6.1 m), one level of supplemental, quick-response in-rack sprinklers located directly below the top tier of storage and at every flue space intersection shall be installed.

For rack storage of Class I through IV commodities stored 25 ft (7.6 m) in height or less and protected with a combination of in-rack sprinklers and CMDA ceiling sprinklers in accordance with 25.9.1, the ceiling sprinkler designs indicated in 25.2.3.2 are valid for clearances of 20 ft (6.1 m) or less between the top of storage and the ceiling sprinkler deflector. The in-rack sprinkler arrangements of 25.9.1 anticipate a scenario in which both the ceiling sprinklers and the in-rack sprinklers must work together to provide fire control. As clearance between the ceiling sprinklers and the top of storage increases, the more challenging it is for ceiling sprinkler discharge to penetrate the fire plume and reach the top of storage. If the clearance exceeds 20 ft (6.1 m), supplemental in-rack sprinklers are required at all flue space intersections on the top of the rack — this usually results in a nominal 4 ft to 5 ft (1.2 m to 1.5 m) height of storage above the supplemental in-rack sprinklers — to help make up for the lost water delivery from the ceiling sprinklers due to the excessive clearance.

EDUFIRE.IR

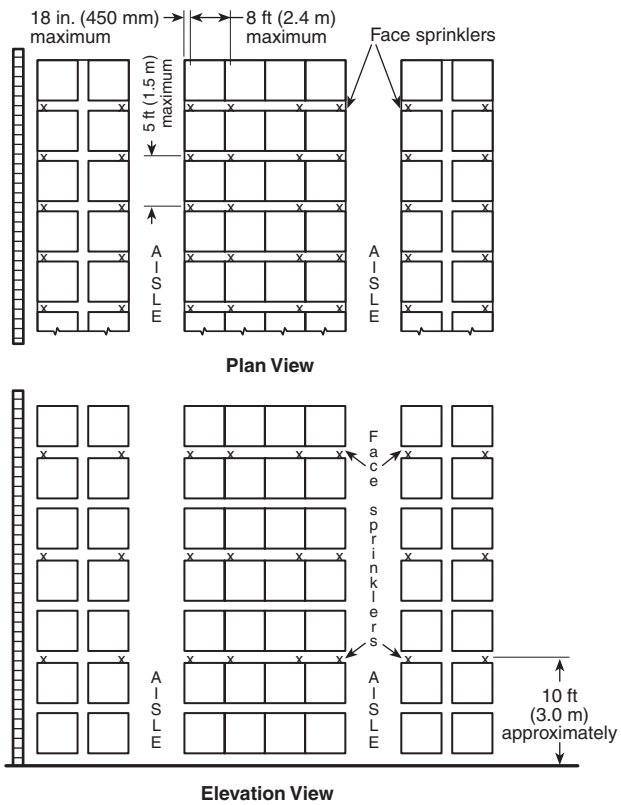

Note: Each square represents a storage cube measuring 4 ft to 5 ft (1.2 m to 1.5 m) on a side. Actual load heights can vary from approximately 18 in. (450 mm) up to 10 ft (3.0 m). Therefore, there could be as few as one load or as many as six or seven loads between in-rack sprinklers that are spaced 10 ft (3.0 m) apart vertically.

FIGURE 25.9.4.3.1(c) *In-Rack Sprinkler Arrangement, Cartoned Group A Plastic and Exposed Nonexpanded Group A Plastic Commodities, Multiple-Row Racks, Storage Height Over 25 ft (7.6 m) — Option 1 [5 ft (1.5 m) Maximum Spacing].*

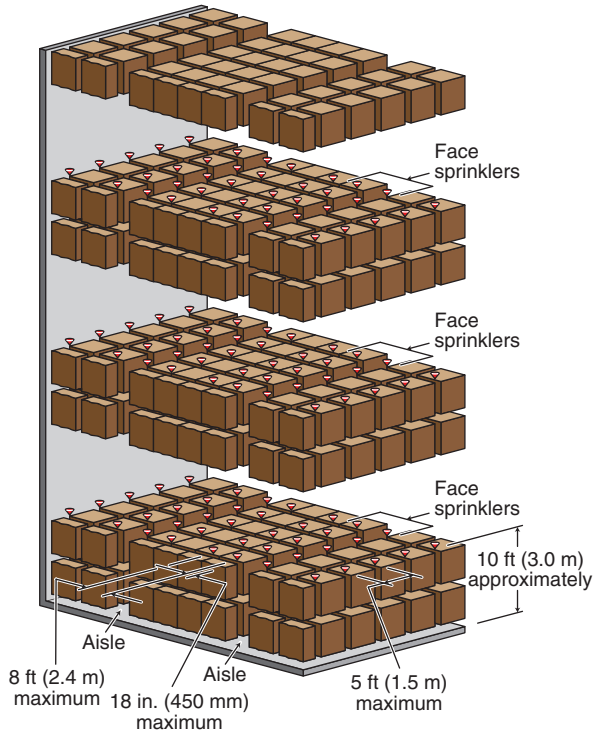

EXHIBIT 25.56 *Positioning of In-Rack Sprinklers in Accordance with Figure 25.9.4.3.1(c). (Courtesy Tyco Fire Products LP)*

Take, for example, a 60 ft (18.3 m) high warehouse facility, a portion of which is being used for 15 ft (4.6 m) high nonencapsulated Class IV double-row open rack storage with 4 ft (1.2 m) wide aisles. Due to the height of the warehouse, ceiling-only protection options are not available, so in-rack sprinkler protection would be necessary for adequate protection. Per 25.9.1, one level of in-rack sprinklers would be needed at roughly the 10 ft (3.0 m) storage level with maximum in-rack horizontal spacing of 8 ft (2.4 m), which is usually at every other pallet load within the rack in the longitudinal flue space only. That would leave about 5 ft (1.5 m) of storage above the top level of in-rack sprinklers. What 25.9.5.1 requires is the addition of supplemental in-rack sprinklers to help decrease the protection needed from the ceiling sprinkler system due to the excessive clearance that exists.

It should be noted, however, NFPA 13 does not currently have a definition for the term *flue space intersection*. In addition, not all storage racks have flue space intersections. Single-row racks and pushback type multiple-row racks do not have longitudinal flues, so they technically do not have flue space intersections. As a result, the current code language could lead to different interpretations of its proper implementation. Looking at the example here, would 25.9.5.1 require supplemental in-rack sprinklers between each pallet load in just the longitudinal flue space? Or would they be needed at the face of the rack as well?

EDUFIRE.IR

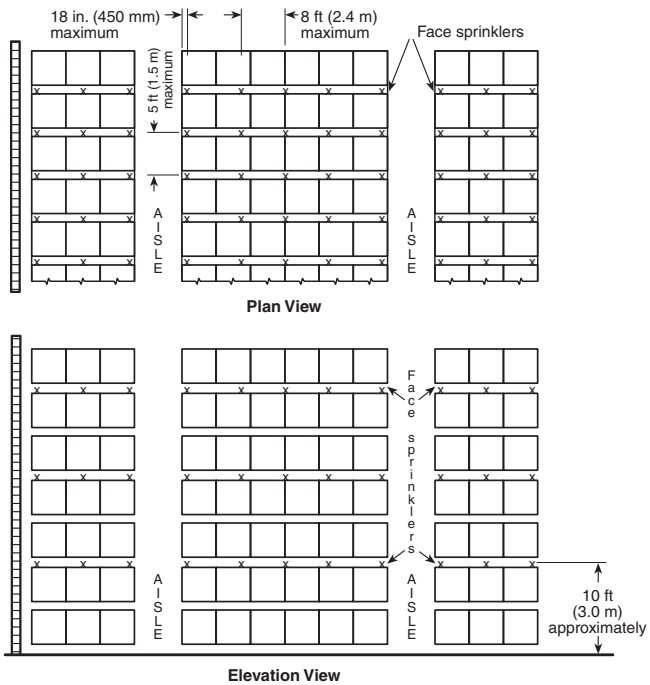

Note: Each square represents a storage cube measuring 4 ft to 5 ft (1.2 m to 1.5 m) on a side. Actual load heights can vary from approximately 18 in. (450 mm) up to 10 ft (3.0 m). Therefore, there could be as few as one load or as many as six or seven loads between in-rack sprinklers that are spaced 10 ft (3.0 m) apart vertically.

FIGURE 25.9.4.3.1(d) *In-Rack Sprinkler Arrangement, Cartoned Group A Plastic and Exposed Nonexpanded Group A Plastic Commodities, Multiple-Row Racks, Storage Height Over 25 ft (7.6 m) — Option 2 [5 ft (1.5 m) Maximum Spacing].*

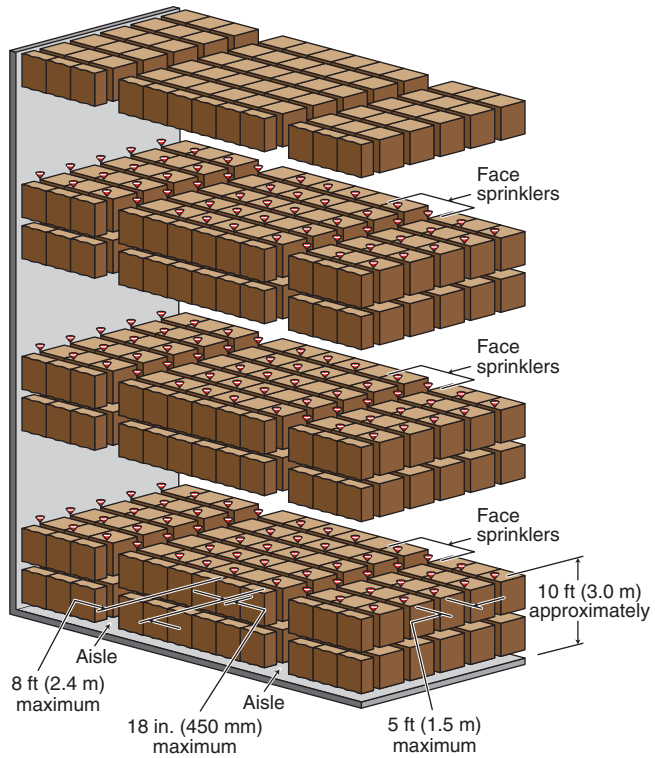

EXHIBIT 25.57 *Positioning of In-Rack Sprinklers in Accordance with Figure 25.9.4.3.1(d). (Courtesy Tyco Fire Products LP)*

What if each pallet load was approximately 8 ft (2.4 m) wide — would any supplemental in-rack sprinklers be needed?

Those are questions on which the current wording in 25.9.5.1 is not clear. Until the committee Technical Committee on Sprinkler System Discharge can resolve the current wording of the language, it must be remembered that the intent of the requirement is to minimize the contribution needed from the ceiling sprinkler system due to the excessive clearance that exists. To achieve that goal, it would appear that the in-rack sprinklers should be arranged to react to a fire anywhere in the rack and control the fire below them, thus leaving only the small amount of storage above the in-rack sprinklers for the ceiling sprinkler system to control. With that being the case, one could argue that in-rack sprinklers would need to be installed on close horizontal spacing, roughly every 4 ft to 5 ft (1.2 m to 1.5 m) and be positioned no more than 18 in. (450 mm) from the face of the rack so that no matter where the fire originates within the rack, an in-rack sprinkler can operate in a timely fashion and minimize the contribution needed from the ceiling sprinkler system. As of the 2019 edition, NFPA 13 does not say that is specifically required, so when conditions arise where the requirements from 25.9.5.1 need to be implemented, the local authority having jurisdiction should be consulted to ensure that their expectations of the requirement are being fulfilled.

EDUFIRE.IR

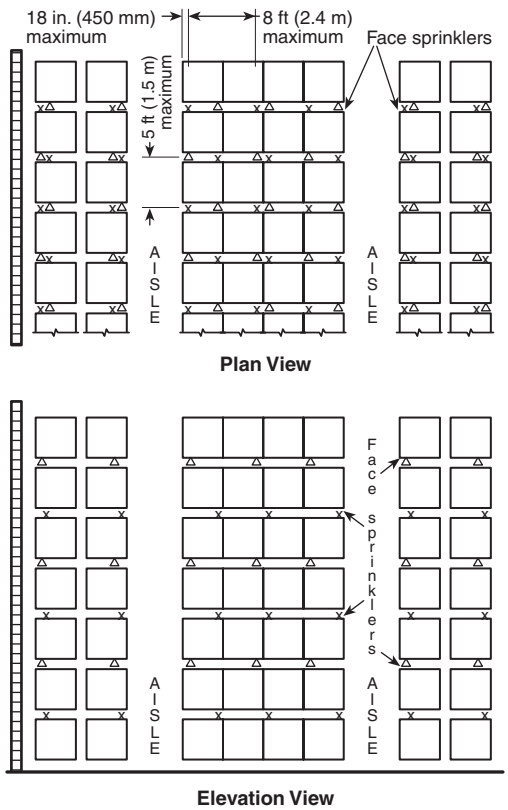

Note: Each square represents a storage cube measuring 4 ft to 5 ft (1.2 m to 1.5 m) on a side. Actual load heights can vary from approximately 18 in. (450 mm) up to 10 ft (3.0 m). Therefore, there could be as few as one load or as many as six or seven loads between in-rack sprinklers that are spaced 10 ft (3.0 m) apart vertically.

FIGURE 25.9.4.3.1(e) *In-Rack Sprinkler Arrangement, Cartoned Group A Plastic and Exposed Nonexpanded Group A Plastic Commodities, Multiple-Row Racks, Storage Height Over 25 ft (7.6 m) — Option 3 [5 ft (1.5 m) Maximum Spacing].*

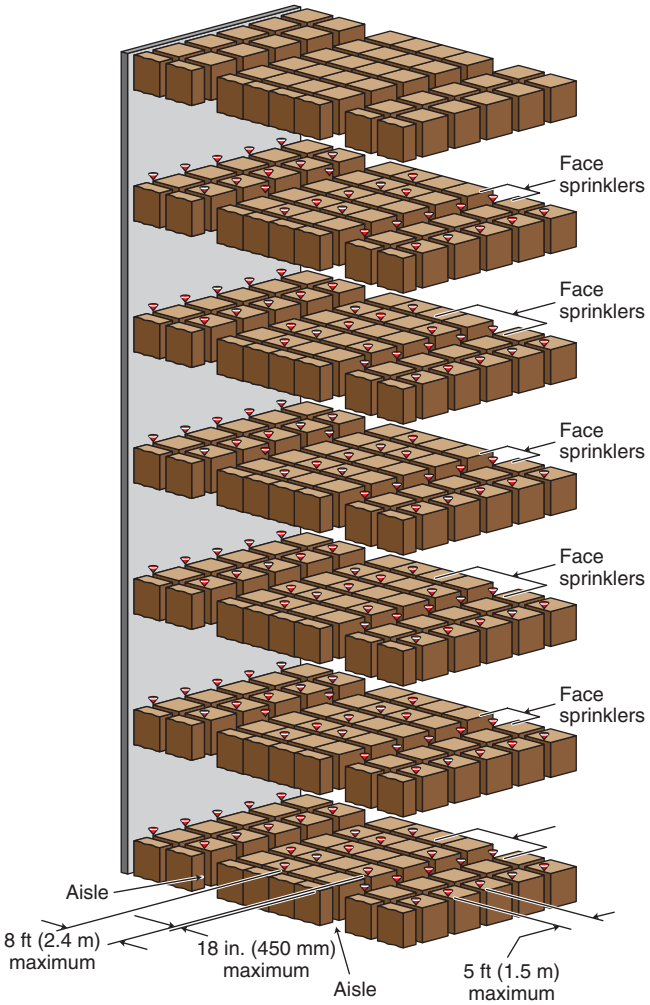

EXHIBIT 25.58 *Positioning of In-Rack Sprinklers in Accordance with Figure 25.9.4.3.1(e). (Courtesy Tyco Fire Products LP)*

25.9.5.2 Where the clearance to ceiling for rack storage of Group A plastic commodities up to and including 25 ft (7.6 m) in height protected by CMDA ceiling-level sprinklers exceeds 10 ft (3.0 m), and the ceiling-level protection is not capable of providing the protection needed for the storage height that would result in a clearance to ceiling of 10 ft (3.0 m), one level of supplemental, quick-response in-rack sprinklers located directly below the top tier of storage and at every flue space intersection shall be installed.

For rack storage of Group A plastics stored up to 25 ft (7.6 m) in height protected with a combination of in-rack sprinklers and CMDA ceiling sprinklers, the ceiling sprinkler designs indicated in 25.9.3 are valid for clearances of 10 ft (3.0 m) or less between the top of storage and the ceiling sprinkler deflector. The in-rack sprinkler arrangements of 25.9.3 anticipate a scenario in which both the ceiling sprinklers and the in-rack

EDUFIRE.IR

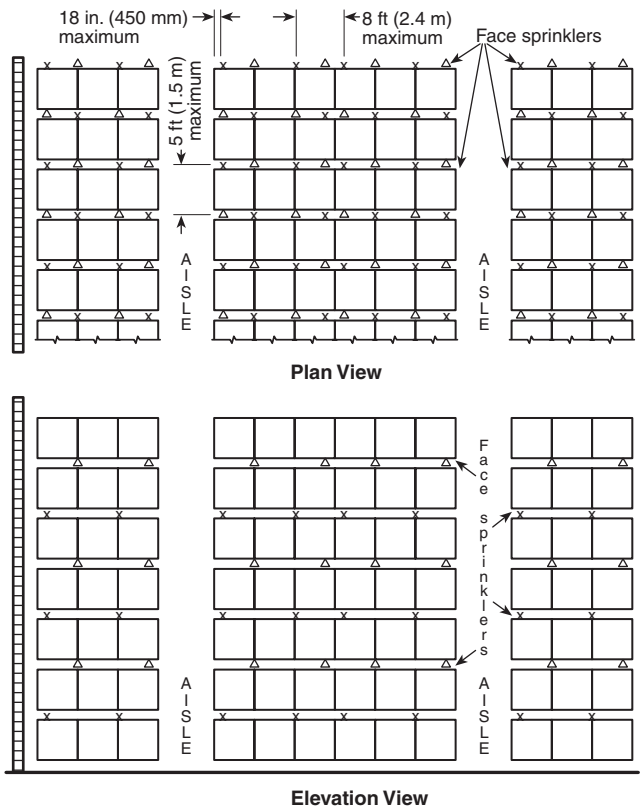

Note: Each square represents a storage cube measuring 4 ft to 5 ft (1.2 m to 1.5 m) on a side. Actual load heights can vary from approximately 18 in. (450 mm) up to 10 ft (3.0 m). Therefore, there could be as few as one load or as many as six or seven loads between in-rack sprinklers that are spaced 10 ft (3.0 m) apart vertically.

FIGURE 25.9.4.3.1(f) *In-Rack Sprinkler Arrangement, Cartoned Group A Plastic and Exposed Nonexpanded Group A Plastic Commodities, Multiple-Row Racks, Storage Height Over 25 ft (7.6 m) — Option 4 [5 ft (1.5 m) Maximum Spacing].*

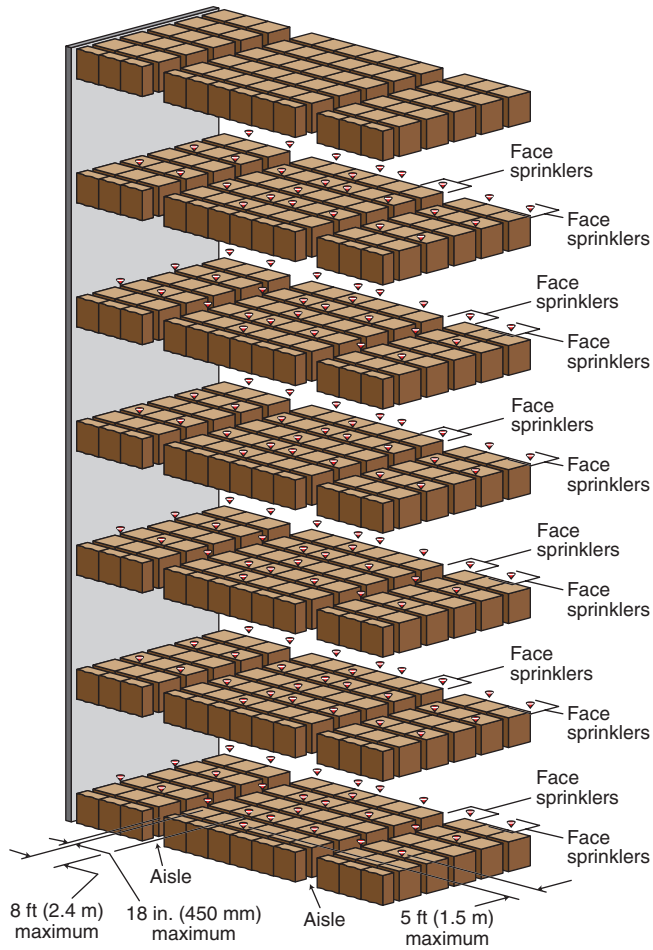

EXHIBIT 25.59 *Positioning of In-Rack Sprinklers in Accordance with Figure 25.9.4.3.1(f). (Courtesy Tyco Fire Products LP)*

sprinklers must work together to provide fire control. As clearance between the ceiling sprinklers and the top of storage increases, the more challenging it is for ceiling sprinkler discharge to penetrate the fire plume and reach the top of storage. If the clearance exceeds 10 ft (3.0 m), supplemental in-rack sprinklers are required at all flue space intersections on the top of the rack — this usually results in a nominal 4 ft to 5 ft (1.2 m to 1.5 m) height of storage above the supplemental in-rack sprinklers — to help make up for the lost water delivery from the ceiling sprinklers due to the excessive clearance.

Take, for example, a 60 ft (18.3 m) high warehouse facility, a portion of which is being used for 15 ft (4.6 m) high cartoned Group A plastics in double-row open rack storage. Due to the height of the warehouse, ceiling-only protection options are not available, so in-rack sprinkler protection would be necessary for adequate protection. Per 25.9.5, in-rack sprinkler protection would be needed as if the clearance between the top of storage and the ceiling sprinklers is 10 ft (3.0 m) and then further supplemented with in-rack sprinklers due to the excessive clearance. Implementing those requirements, 25.9.3 indicates that one level of in-rack sprinklers could be installed at roughly the 10 ft (3.0 m) storage level with in-rack sprinklers

EDUFIRE.IR

only in the longitudinal flue space at every other transverse flue space intersection according to Figure 25.9.3.1(a). That would leave about 5 ft (1.5 m) of storage above the top level of in-rack sprinklers. What 25.9.5.2 requires is the addition of supplemental in-rack sprinklers to help decrease the protection needed from the ceiling sprinkler system due to the excessive clearance that exists.

It should be noted, however, NFPA 13 does not currently have a definition for the term *flue space intersection*. In addition, not all storage racks have flue space intersections. Single-row racks and pushback type multiple-row racks do not have longitudinal flues, so they technically do not have flue space intersections. As a result, the current code language could lead to different interpretations of its proper implementation. Looking at the example here, would 25.9.5.2 require supplemental in-rack sprinklers between each pallet load in just the longitudinal flue space? Or would they be needed at the face of the rack as well? What if each pallet load was approximately 8 ft (2.4 m) wide — would any supplemental in-rack sprinklers be needed?

Those are questions on which the current wording in 25.9.5.2 is not clear. Until the committee can resolve the current wording of the language, it must be remembered that the intent of the requirement is to minimize the contribution needed from the ceiling sprinkler system due to the excessive clearance that exists. To achieve that goal, it would appear that the in-rack sprinklers should be arranged to react to a fire anywhere in the rack and control the fire below them, thus leaving only the small amount of storage above the in-rack sprinklers for the ceiling sprinkler system to control. With that being the case, one could argue that in-rack sprinklers would need to be installed on close horizontal spacing, roughly every 4 ft to 5 ft (1.2 m to 1.5 m) and be positioned no more than 18 in. (450 mm) from the face of the rack so that no matter where the fire originates within the rack, an in-rack sprinkler can operate in a timely fashion and minimize the contribution needed from the ceiling sprinkler system. As of the 2019 edition, NFPA 13 does not say this is specifically required, so when conditions arise in which the requirements from 25.9.5.2 need to be implemented, the local authority having jurisdiction should be consulted to ensure that their expectations of the requirement are being fulfilled.

25.9.5.3 Where the clearance to ceiling exceeds 10 ft (3.0 m) for rack storage over 25 ft (7.6 m) in height, and the ceiling-level protection is not capable of providing the protection needed for the storage height that would result in a clearance to ceiling of 10 ft (3.0 m), one level of supplemental, quick-response in-rack sprinklers located directly below the top tier of storage and at every flue space intersection shall be installed.

For rack storage of Class I through Class IV and Group A plastic commodities stored over 25 ft (7.6 m) in height protected with a combination of in-rack sprinklers and CMDA ceiling sprinklers, the ceiling sprinkler designs indicated in 25.2.3.3 for Class I through Class IV commodities and Section 25.2 for Group A plastics are valid for clearances of 10 ft (3.0 m) or less between the top of storage and the ceiling sprinkler deflector. The in-rack sprinkler arrangements of 25.9.2 and 25.9.4 anticipate scenarios in which both the ceiling sprinklers and the in-rack sprinklers must work together to provide fire control. As clearance between the ceiling sprinklers and the top of storage increases, the more challenging it is for ceiling sprinkler discharge to penetrate the fire plume and reach the top of storage. If the clearance exceeds 10 ft (3.0 m), supplemental in-rack sprinklers are required at all flue space intersections on the top of the rack — this usually results in a nominal 4 ft to 5 ft (1.2 m to 1.5 m) height of storage above the supplemental in-rack sprinklers — to help make up for the lost water delivery from the ceiling sprinklers due to the excessive clearance.

Take, for example, a 60 ft (18.3 m) high warehouse facility, a portion of which is being used for 35 ft (10.7 m) high cartoned Group A plastics in double-row open rack storage. Due to the height of the storage, in-rack sprinkler protection is required from the options indicated in Figure 25.9.4.2.1(a) through Figure 25.9.4.2.1(c). Per 25.9.5.3, supplemental in-rack sprinkler protection would be needed at the top of the storage rack, which would leave 5 ft (1.5 m) of storage above the top level of in-rack sprinklers. However, according to Figure 25.9.4.2.1(a) through Figure 25.9.4.2.1(c), that is where in-rack sprinklers are required, and in-rack sprinklers are provided at every flue space intersection in the longitudinal flue space of Figure 25.9.4.2.1(c) and at every flue space intersection in the longitudinal flue space and at the face of the rack of Figure 25.9.4.2.1(b). Therefore, the question becomes are supplemental in-rack sprinklers needed since they are required at every flue space intersection? In addition, Figure 25.9.4.2.1(a) has in-rack sprinklers

EDUFIRE.IR

in combination with horizontal barriers, so does that in-rack sprinkler arrangement meet the intent of 25.9.5.3?

This question is raised because NFPA 13 does not currently have a definition for the term *flue space intersection*, nor does it provide an in-rack sprinkler arrangement equivalency where in-rack sprinklers are installed under a horizontal barrier. In addition, not all storage racks have flue space intersections. Single-row racks and pushback type multiple-row racks do not have longitudinal flues, so they technically do not have flue space intersections. As a result, the current language of NFPA 13 could lead to different interpretations of its proper implementation. Based on the example here, would 25.9.5.3 require supplemental in-rack sprinklers for the in-rack sprinkler arrangement indicated in Figure 25.9.4.2.1(a) or Figure 25.9.4.2.1(c)?

These are questions on which the current wording in 25.9.5.3 is not clear. Until the committee can resolve the current wording of the language, it must be remembered that the intent of the requirement is to minimize the contribution needed from the ceiling sprinkler system due to the excessive clearance that exists. To achieve that goal, it would appear that the in-rack sprinklers should be arranged to react to a fire anywhere in the rack and control the fire below them, thus leaving only the small amount of storage above the in-rack sprinklers for the ceiling sprinkler system to control. With that being the case, one could argue that in-rack sprinklers would need to be installed on close horizontal spacing, roughly every 4 ft to 5 ft (1.2 m to 1.5 m) and be positioned no more than 18 in. (450 mm) from the face of the rack so that no matter where the fire originates within the rack, an in-rack sprinkler can operate in a timely fashion and minimize the contribution needed from the ceiling sprinkler system. Guidance would be needed to identify how the installation of a horizontal barrier with supplemental in-rack sprinklers can also meet this intent. Currently, NFPA 13 does not address what is specifically required, so when conditions arise in which the requirements from 25.9.5.3 need to be implemented, the local authority having jurisdiction should be consulted to ensure that their expectations of the requirement are fulfilled.

25.9.5.4 Where the supplemental in-rack sprinkler protection has been installed in accordance with this section, the ceiling-level sprinkler system design shall be based on the storage height that results in an acceptable clearance to ceiling.

25.9.5.5 Where in-rack sprinklers are required for the actual storage height based on a theoretical acceptable clearance to ceiling, in-rack sprinklers shall be installed as indicated by that criteria and supplemented as outlined in this section.

25.9.6 Rack Storage of Rubber Tires Up to and Including 20 ft (6.1 m) in Height.

For rack storage of rubber tires stored up to 20 ft (6.1 m) in height, see 25.2.3.6 to obtain the allowable ceiling designs and Sections 25.4 through 25.7 to obtain the allowable in-rack sprinkler horizontal and vertical locations.

The in-rack arrangements for rack storage of rubber tires, either on-side or on-tread, up to and including 20 ft (6.1 m) in height shall be in accordance with the guidelines outlined in Sections 25.4 through 25.7 as applicable.

25.10 In-Rack Sprinkler Arrangements in Combination with CMSA Sprinklers at Ceiling Level.

25.10.1* Rack Storage of Class I Through Class IV and Group A Plastic Commodities. The in-rack arrangements for rack storage of Class I through Class IV and Group A plastic commodities protected by CMSA sprinklers at ceiling level shall be in accordance with the guidelines outlined in Sections 25.4 through 25.7 as applicable.

EDUFIRE.IR

A.25.10.1 There are currently no situations where in-rack sprinklers are required to be used to protect Group A plastic commodities stored over 25 ft (7.6 m) in height where CMSA sprinklers are used at the ceiling.

25.11 In-Rack Sprinkler Arrangements in Combination with ESFR Sprinklers at Ceiling Level.

25.11.1 Rack Storage of Class I Through Class IV and Group A Plastic Commodities. The in-rack arrangements for rack storage of Class I through Class IV and Group A plastic commodities protected by ESFR sprinklers at ceiling level shall be in accordance with the guidelines outlined in Sections 25.4 through 25.7 as applicable.

25.12 Design Criteria for In-Rack Sprinklers in Combination with Ceiling-Level Sprinklers.

25.12.1 General.

25.12.1.1 In-rack sprinkler design criteria for Group A plastic commodities shall be permitted for the protection of the same storage height and configuration of Class I, II, III, and IV commodities.

25.12.1.2 Pipe sizing of an in-rack sprinkler system shall be permitted to be based on hydraulic calculations and not restricted by any pipe schedule.

25.12.1.3 Where in-rack sprinklers are being installed to protect a storage rack and, due to the length of the rack, fewer in-rack sprinklers will be installed than the number of in-rack sprinklers specified in the in-rack design, the in-rack sprinkler design shall be based on only those in-rack sprinklers installed within the protected rack.

25.12.1.4 Where in-rack sprinkler arrangements have been installed in accordance with this chapter, except for Section 25.8, the flow and pressure requirements of both the ceiling and in-rack sprinkler systems over the same protected area shall be hydraulically balanced together to the higher sprinkler system pressure requirement at their point of connection.

25.12.1.5 The minimum water supply requirements for a hydraulically designed occupancy hazard automatic in-rack sprinkler system shall be determined by adding the hose stream allowance from Table 20.12.2.6 to the water supply for ceiling-level sprinklers determined in Section 25.2, unless indicated otherwise.

25.12.2 Number of Operating In-Rack Sprinklers.

25.12.2.1 The number of in-rack sprinklers in the design of the in-rack sprinkler system shall be in accordance with Table 25.12.2.1.

Based on the increased hazard and difficulty of fire control associated with rubber tire storage, the number of in-rack sprinklers required to be calculated is higher than that typically required for the protection of Class I through Class IV commodities or Group A plastics.

EDUFIRE.IR

TABLE 25.12.2.1 *In-Rack Sprinkler System Design: Number of In-Rack Sprinklers*

Type of Storage	*Commodity Class*	*Rack Type*	*Ceiling Sprinkler Type*	*No. of Required In-Rack Sprinkler Levels*	*No. of In-Rack Sprinklers in the Design*
Miscellaneous	Class I through IV, Group A plastics, and rubber tires	Any	Any	Any	4
Storage not meeting the definition of miscellaneous	Class I through III	Solid shelf	Any	One	6
			Any	More than one	10 (5 on each of the top two levels)
		Open	CMDA	One	6
			CMDA	More than one	10 (5 on each of the top two levels)
	Class I through IV	Open	CMSA	One	8
	Class I through IV and Group A plastics	Open	ESFR	One	8
	Class IV	Open	CMDA	More than one	10 (5 on each of the top two levels)
	Class IV and Group A plastics	Solid shelf	Any	One	8
				More than one	14 (7 on each of the top two levels)
		Open	CMDA	One	8
				More than one	14 (7 on each of the top two levels)
	Group A plastics	Open	CMSA	One	8
	Rubber tires	Open	CMDA	One	12

25.12.3 In-Rack Sprinkler Flow/Pressure.

C.19 [25.12.3] Operating pressures were 15 psi (1.0 bar) on all tests of sprinklers in racks with storage 20 ft (6.1 m) high and 30 psi (2.1 bar) for storage 30 ft (9.1 m) and 50 ft (15 m) high.

Tests 112 and 124 were conducted to compare the effect of increasing sprinkler discharge pressure at in-rack sprinklers from 30 psi to 75 psi (2.1 bar to 5.2 bar). With the higher discharge pressure, the fire did not jump the aisle, and damage below the top level of protection within the racks was somewhat better controlled by the higher discharge pressure of the in-rack sprinklers. A pressure of 15 psi (1 bar) was maintained on in-rack sprinklers in the first 30 ft (9.1 m) high tests (Tests 103 and 104). Pressure on in-rack sprinklers in subsequent tests was 30 psi (2.1 bar), except in Test 124, where it was 75 psi (5.2 bar).

25.12.3.1 The required flow or pressure required from the most remote in-rack sprinkler in the design of the in-rack sprinkler system shall be in accordance with Table 25.12.3.1.

EDUFIRE.IR

TABLE 25.12.3.1 *In-Rack Sprinkler System Design: Minimum Required Flow/Pressure from In-Rack Sprinklers*

Type of Storage	*Commodity Class*	*Rack Type*	*Ceiling Sprinkler Type*	*Storage Height*		*Minimum Design Flow/ Pressure for In-Rack Sprinklers*
				ft	*m*	
Miscellaneous	Class I through IV, Group A plastics, and rubber tires	Any	Any	Any	Any	15 psi (1.0 bar)
Storage not meeting the definition of miscellaneous	Class I through IV	Open	CMDA	Up to 25	Up to 7.6	15 psi (1.0 bar)
			CMSA	Any	Any	15 psi (1.0 bar)
	Class I through IV and Group A plastics	Open	CMDA	Over 25	Over 7.6	30 gpm (115 L/min)
			ESFR	Any	Any	60 gpm (230 L/min)
		Solid shelves	Any	Any	Any	30 gpm (115 L/min)
	Group A plastics	Open	CMDA	Up to 25	Up to 7.6	15 psi (1.0 bar)
			CMSA	Up to 25	Up to 7.6	15 psi (1.0 bar)
	Rubber tires	Open	CMDA	Any	Any	30 psi (2.1 bar)

References Cited in Commentary

National Fire Protection Association, 1 Batterymarch Park, Quincy, MA 02169-7471.

NFPA 11, *Standard for Low-, Medium-, and High-Expansion Foam*, 2016.

NFPA 231, *Standard for General Storage*, 1998 edition. (Document was incorporated into the 1999 edition of NFPA 230, *Standard for the Fire Protection of Storage*, which was itself incorporated into the 2006 edition of NFPA 1, *Fire Code*.)

NFPA 231C, *Standard for Rack Storage of Materials*, 1998 edition. (Portions pertaining to design and installation of automatic sprinkler system were incorporated into the 1999 edition of NFPA 13; remaining portions were incorporated into the 1999 edition of NFPA 230, *Standard for the Fire Protection of Storage*.)

FM Global, 270 Central Avenue, P.O. Box 7500, Johnston, RI 02919.

Large-Scale Validation of (1) In-Rack Automatic Sprinkler Designs for Open-Frame Rack Storage Using Quick-Response, Pendent K200 lpm/bar1/2 (K14.0 gpm/psi1/2) and Larger Sprinklers, and (2) Protection of Uncartoned Unexpanded Plastics in Open-Frame Double-Row Racks Using Two Different In-Rack Sprinkler Protection Arrangements, June 2016.

Underwriters Laboratories Inc., 333 Pfingsten Road, Northbrook, IL 60062-2096.

"Exposed Expanded Group A Plastics Stored in Racks with a Horizontal Barrier Protected by K=25.2 EC In-Rack and K=16.8 ESFR Sprinklers," August 30, 2012.

"Cartoned Unexpanded Group A Plastic Commodity Stored in Racks with Continuous Combustible Horizontal Barriers Protected by K=25.2 EC In-Rack and K=25.2 EC Ceiling Sprinklers," October 30, 2013.

"Exposed Expanded Group A Plastic Commodity Stored in Multi-Row Racks with Continuous Combustible Horizontal Barriers Protected by K=25.2 EC In-Rack and K=25.2 EC Ceiling Sprinklers," July 25, 2014.

"Cartoned Unexpanded Group A Plastic Commodity Stored in Racks with Combustible Horizontal Barriers Protected by K=25.2 EC In-Rack and K=25.2 EC Ceiling Sprinklers," August 17, 2015.

EDUFIRE.IR

EDUFIRE.IR

CHAPTER

26

Special Occupancy Requirements

REORGANIZATION NOTE

This chapter was Chapter 22 in the 2016 edition of NFPA 13. The entire chapter was carried over and sections renumbered to replace the Chapter 22 prefix with the Chapter 26 prefix.

Sprinkler criteria from other NFPA codes and standards are consolidated in Chapter 26 of NFPA 13 so that sprinkler design and installation criteria for special occupancies can be found in a single location. These other NFPA standards specify certain design requirements for automatic sprinkler systems, and this chapter extracts those requirements and makes reference to the remaining chapters of this standard. In the extracted material, no method for implementing the design information, such as density/area, is given without referencing the remainder of NFPA 13.

To fully understand the criteria in Chapter 26, the user should consult the referenced NFPA standards. The referenced standards provide options for standard sprinkler protection, such as water spray sprinklers, foam-water sprinklers, and other special extinguishing systems, for the protection of the specified hazards.

26.1 General.

26.1.1 Application.

26.1.1.1 In addition to the requirements of Chapter 8, Chapters 11 through 22, and Chapter 23, the following special occupancy requirements shall apply.

26.1.1.1.1 All provisions of design criteria in this standard, including design area increases and reductions, shall also apply to these special occupancy requirements.

26.1.1.2 Where the requirements of the reference standard differ from the requirements of this standard, the reference standard shall take precedence.

26.1.2 Definitions. For terms not defined in Chapter 3, the definitions of the reference standard shall apply.

26.2 Flammable and Combustible Liquids.

Flammable and combustible liquids are defined and classified by NFPA 30, *Flammable and Combustible Liquids Code,* as follows:

Flammable Liquid: Any liquid that has a closed-cup flash point below 100°F (37.8°C). Flammable liquids are classified by NFPA 30 as Class I and are further classified as follows:

EDUFIRE.IR

DESIGNER'S CORNER [26.1.1.2]

When a document such as NFPA 30B, *Code for the Manufacture and Storage of Aerosol Products*, has its own sprinkler protection criteria, is the design area required to be increased by 30 percent in accordance with 19.3.3.2.4?

Not necessarily. Paragraph 26.1.1.2 of NFPA 13 makes it clear that other documents have the authority to decide what their sprinkler protection criteria will be. The technical committees that write sprinkler criteria for other standards such as NFPA 30B have reviewed the slope ceiling criteria and have decided whether to require the increase. In the case of NFPA 30B, the committee decided that because the fire tests were performed under flat, smooth ceilings, that code should be used only where the ceiling slope goes up to 2 in 12. For slopes greater than that, NFPA 30B criteria are not applicable, and the user must look outside that code to find criteria.

The 30 percent increase mandated by 19.3.3.2.4 of NFPA 13 applies only to the light hazard, ordinary hazard, and extra hazard occupancies of Chapter 5 and should be used only with those three hazard classifications. For other hazard classifications, including those in Chapter 22, the user will need to determine whether the referenced document requires the 30 percent increase for the ceiling slope.

In many cases, the committees responsible for other NFPA standards have not addressed the issue directly. In some cases, the committees are not experts in sprinkler protection and do not realize that they need to address the 30 percent increase issue. In other cases, the committee has reviewed the process by which its standard's sprinkler protection criteria were determined and decided that the 30 percent increase is not necessary. In those cases, it is important that the committees positively and clearly state their position within their standards. For example, in the most recent edition of NFPA 409, *Standard on Aircraft Hangars*, the committee determined that the protection criteria in their document are sufficient even under a steeply pitched or rounded ceiling. Therefore, they stated definitively that an increase of 30 percent is not necessary.

SEE ALSO

6.4.2.7.1 of NFPA 30B for more information.

1. Class IA Liquid — Any liquid that has a flash point below 73°F (22.8°C) and a boiling point below 100°F (37.8°C)
2. Class IB Liquid — Any liquid that has a flash point below 73°F (22.8°C) and a boiling point at or above 100°F (37.8°C)
3. Class IC Liquid — Any liquid that has a flash point at or above 73°F (22.8°C) but below 100°F (37.8°C)

Combustible Liquid: Any liquid that has a closed-cup flash point at or above 100°F (37.8°C). Combustible liquids are classified by NFPA 30 as Class II or Class III as follows:

1. Class II Liquid — Any liquid that has a flash point at or above 100°F (37.8°C) and below 140°F (60°C)
2. Class IIIA Liquid — Any liquid that has a flash point at or above 140°F (60°C) but below 200°F (93°C)
3. Class IIIB Liquid — Any liquid that has a flash point at or above 200°F (93°C)

See Section 4.3.1 of NFPA 30 for additional information.

26.2.1 Design Requirements. Sprinkler system discharge criteria for the protection of flammable and combustible liquids shall comply with NFPA 30.

Fire protection system design criteria for protecting containers of flammable and combustible liquids are provided in Chapter 16 of NFPA 30. The design criteria are contained in 12 tables that address different storage situations and configurations and include both sprinkler and foam-water sprinkler systems. Three decision trees [see Figure 16.4.1(a) through Figure 16.4.1(c) of NFPA 30] assist the user in identifying the appropriate table to be used. One of the decision trees, Figure 16.4.1(c), is reproduced here as Exhibit 26.1. Note that all the references in Exhibit 26.1 are to NFPA 30.

Figure 16.4.1(c) of NFPA 30 (Exhibit 26.1) directs the user to NFPA 13 in those cases where the design criteria are deemed adequate. If NFPA 13 is not considered to be appropriate, the user is directed to one of the 12 design criteria tables in NFPA 30. Each entry in the 12 tables in Chapter 16 of NFPA 30 has a "fire test reference" number that is keyed to an entry in corresponding tables in Annex D of NFPA 30. The tables in Annex D link the criteria in the Chapter 16 tables with full-scale fire test data on which the criteria are based. The full-scale fire test data are summarized in the *Directory of Fire Tests Involving Storage of Flammable and Combustible Liquids in Containers,* by David P. Nugent. This resource is unique to NFPA 30 and allows the user a means to investigate the source data on which the fire protection design criteria were developed.

EDUFIRE.IR

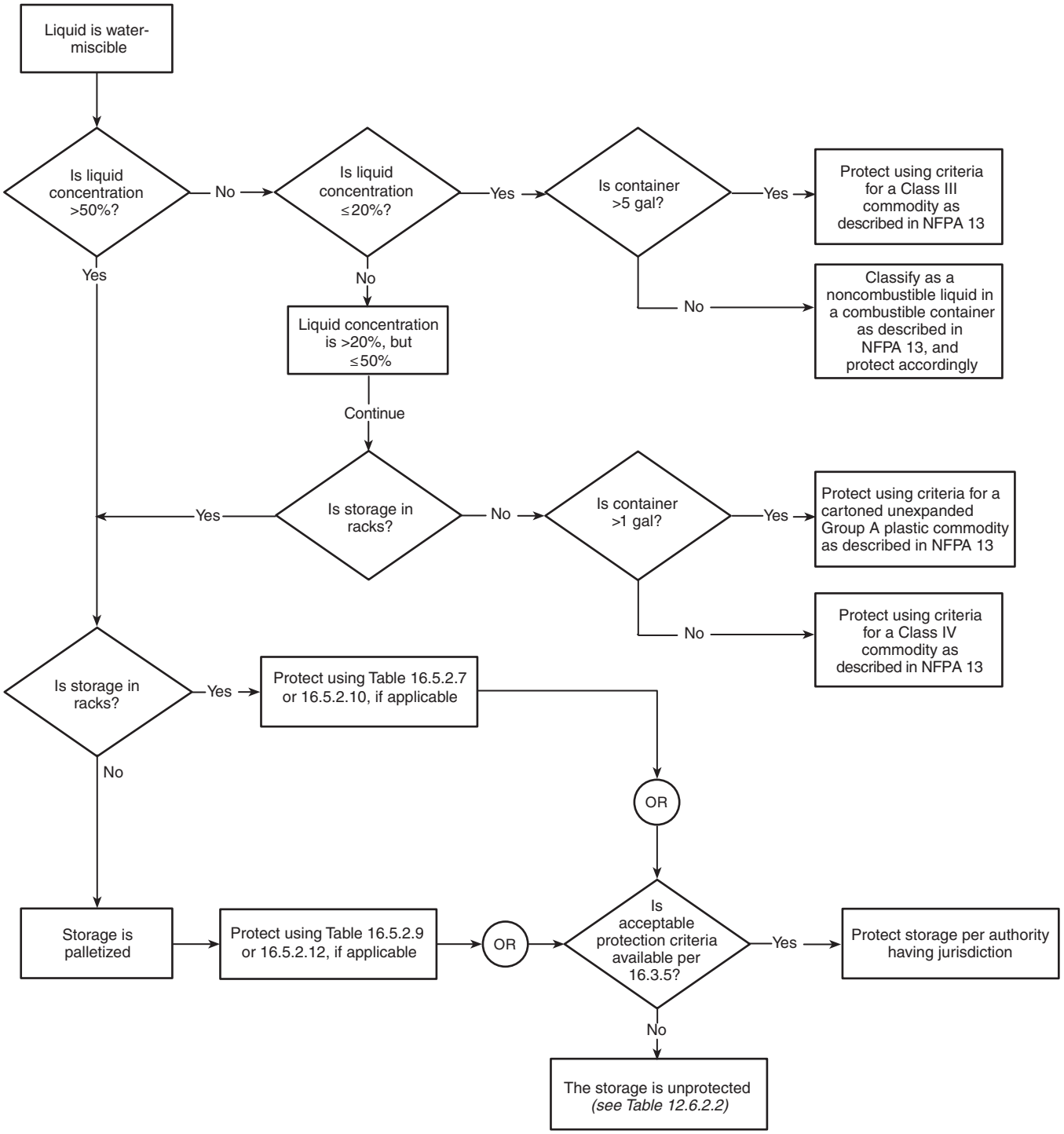

Note: For SI units, 1 gal = 3.8 L.

EXHIBIT 26.1 *Fire Protection Criteria Decision Tree for Miscible Flammable and Combustible Liquids in Nonmetallic Containers. [Source: NFPA 30, 2018 ed., Figure 16.4.1(c)]*

EDUFIRE.IR

CLOSER LOOK [26.2.1]

NFPA 30 Sprinkler Criteria

The tests compiled in the *Directory of Fire Tests Involving Storage of Flammable and Combustible Liquids in Containers* were conducted over a 30-year period at fire test centers operated by FM Global, Underwriters Laboratories Inc., and Southwest Research Institute. Tests were conducted using small-, intermediate-, and large-scale configurations that simulated bulk/palletized, rack, and shelf storage typical of that found in warehouse and retail facilities throughout the country. Test fuels included Class IB through Class IIIB liquids, as previously defined. Container types included relieving-style and nonrelieving-style steel, plastic, and glass containers. All the tests used operating sprinkler systems discharging either water or foam-water.

Several variables were identified as significant determinants of the severity of the ensuing fire and its rate of growth, as well as the ability of the fire protection system to control or suppress the fire. These variables included the following:

1. Physical properties and fire hazard properties of the liquid
2. Style and size of container
3. Presence or absence of packaging material (e.g., corrugated cartons)
4. Ignition scenario
5. Storage arrangement
6. Design parameters of fire protection system

The effectiveness of the fire protection systems typically was assessed based on the following:

1. Number of sprinkler heads that operated and their time of operation
2. Temperature of fire gases at the ceiling and, where available, temperature of ceiling structural elements
3. Extent of fire travel through test array
4. Whether fire was able to jump the aisle separating test array from an adjacent target array
5. Assessment of damage in both test and target storage arrays

More detailed discussion of the tests and the interrelationship of the specified variables can be found in "Fire Tests Involving Storage of Flammable and Combustible Liquids in Small Containers," also by Nugent.

A list of the 12 fire protection design criteria tables as they appear in NFPA 30 follows (IBC stands for intermediate bulk container):

1. Table 16.5.2.1 — Design Criteria for Sprinkler Protection of Single- and Double-Row Rack Storage of Liquids in Metal Containers, Portable Tanks, and IBCs
2. Table 16.5.2.2 — Design Criteria for Sprinkler Protection of Palletized and Stacked Storage of Liquids in Metal Containers, Portable Tanks, and IBCs
3. Table 16.5.2.3 — Design Criteria for Foam-Water Sprinkler Protection of Single- or Double-Row Rack Storage of Liquids in Metal Containers, Portable Tanks, and IBCs
4. Table 16.5.2.4 — Design Criteria for Foam-Water Sprinkler Protection of Palletized and Stacked Storage of Liquids in Metal Containers, Portable Tanks, and IBCs
5. Table 16.5.2.5 — Design Criteria for Sprinkler Protection of Single-, Double-, and Multiple-Row Rack Storage of Class IIIB Liquids
6. Table 16.5.2.6 — Design Criteria for Sprinkler Protection of Shelf Storage of Liquids in Metal Containers
7. Table 16.5.2.7 — Design Criteria for Sprinkler Protection of Single- and Double-Row Rack Storage of Water-Miscible Liquids in Glass or Plastic Containers
8. Table 16.5.2.8 — Design Criteria for Single-Row Rack, Double-Row Rack, and Palletized Storage of Liquids in Relieving-Style Metal Containers
9. Table 16.5.2.9 — Design Criteria for Sprinkler Protection of Palletized Storage of Class II and Class III Liquids in Listed and Labeled Rigid Nonmetallic IBCs
10. Table 16.5.2.10 — Design Criteria for Sprinkler Protection of Single- and Double-Row Rack Storage of Class II and Class III Liquids in Listed and Labeled Rigid Nonmetallic IBCs
11. Table 16.5.2.11 — Design Criteria for Sprinkler Protection of Palletized or Stacked Storage of Unsaturated Polyester Resins in Metal Containers
12. Table 16.5.2.12 — Design Criteria for Sprinkler Protection of Palletized or Stacked Storage of Miscible Liquids in Glass or Plastic Containers

The user is urged to review Chapter 16, Annex D, and Annex E of NFPA 30 for additional important information.

26.2.2 Installation Requirements. (Reserved)

Subsection 26.2.2 is reserved for installation requirements. Chapter 16 of NFPA 30 includes important information on installation requirements and limitations for the protection of flammable and combus-tible liquids storage. The user should also refer to Table 9.4.3 of NFPA 30 for information on allowable container size.

EDUFIRE.IR

26.3 Aerosol Products.

26.3.1 Design Requirements. Sprinkler system discharge criteria for the protection of aerosol products shall comply with NFPA 30B.

26.3.2 Installation Requirements. (Reserved)

CLOSER LOOK [26.3.1]

Sprinkler Protection Alternatives Based on NFPA 30B

The automatic fire sprinkler protection alternatives provided in Chapter 6 of NFPA 30B are derived from a multitude of aerosol product fire tests. The testing has been conducted for over 35 years by a major insurance company, as well as through a wide range of small-, medium-, and large-scale tests sponsored by the aerosol products industry. The aerosol fire research represents a significant body of knowledge regarding aerosol fire development and control for multiple types of aerosol products in various storage and protection scenarios, including the most recent concerns over plastic-wrapped (uncartoned) aerosol products.

Historically, aerosol warehouse storage fires have been found to begin as cardboard fires. The fire travels up the flue space, burning off the aerosol carton faces. A flame is usually above the top of the array before the first aerosol can ruptures and aerosols become involved in the fire. As aerosol containers rupture, some of the heat from the fuel added by the aerosol rises quickly to the ceiling, while some is absorbed into other aerosol containers, bringing them closer to, or exceeding, their burst pressure.

A report from FM Global and Underwriters Laboratories Inc., "Full Scale Fire Tests: Sprinkler Protection for Rack Storage of Plastic-Wrapped (Uncartoned) Aerosols," demonstrated a significant difference in the fire scenario for this type of packaging. For plastic-wrapped products, the tests showed that the plastic became involved and spread over the array of cans quickly. Unlike the burning process in the cardboard carton situation, the cans did not have a sole tendency to rupture. Rupturing occurred, but it was not the predominant means of fire spread. There was evidence of nozzle assembly failures that caused gradual product venting. As the gradual venting occurred, the product ignited and flames jetted from the cans. In other cases, product was expelled from the cans and created liquid pools that eventually ignited. In both situations, the fire burned for a longer period of time, subsequently allowing more aerosol cans to ignite due to the sustained burning.

Early application of adequate densities of sprinkler water is the most effective way to control or suppress an aerosol fire, avoiding a chain reaction that can lead to loss of control. For that reason, early suppression fast-response (ESFR) protection is especially effective for aerosol products.

Understanding the dynamics of aerosol product rack storage is key to understanding and implementing sprinkler protection for those types of products. The rack storage configuration is ideal for promoting fire development. Because the fuel is supported, the fire has access to air from all sides and the stored commodity does not topple over, as it would in solid-piled storage. A rack also has many areas that are shielded from ceiling sprinkler discharge.

Testing of rack storage configurations has demonstrated a consistent fire development pattern. First, the fire starts at a certain point and widens as it moves up the storage array in a "V" pattern. When the fire reaches the second tier of storage, the flames fan out along the bottom of the pallet above and spread laterally to the face of the rack. Fireballs from rupturing aerosol cans also spread fire to the face of the rack. Once the fire is established on the face of the rack, the fire spreads rapidly upward and outward horizontally in the classic "V" pattern, thus exposing more of the commodity. The fire on the face of the rack and within the transverse flue spaces of the rack structure also causes more aerosol containers to rupture. As additional containers rupture, uninvolved containers on the interior of the pallet load are now exposed to the fire.

Additionally, fire can jump the aisle space between two rows of racks. This can happen in several ways. If the fire is severe enough, the radiant energy alone can be sufficient to ignite combustible cartons or commodities in the exposed rack. Fireballs from rupturing aerosol cans are large enough to engulf adjacent racks with flame. Occasionally, burning flammable liquid might be ejected from rupturing containers with enough force to reach the exposed storage.

In-rack sprinklers, located in the longitudinal flue space, are highly effective in preventing fire from crossing into the other half of a double-row rack. In-rack sprinklers located at the face of the rack structure have been shown to stop fire from spreading up the face of the rack. The position of the sprinklers within the rack structure allows them to wet down the face of the storage array along the aisle. This placement reduces the demand on the ceiling sprinkler system, which allows a reduction in the design density of the ceiling sprinkler system. ESFR sprinklers operate fast enough and discharge water at a high enough density that they are capable of preventing fire from spreading up the face of the rack. Table 6.4.2.7(e) through Table 6.4.2.7(l) and Figure 6.4.2.7(a) through Figure 6.4.2.7(e) of NFPA 30B provide the requirements and sprinkler configurations for rack storage of both cartoned and uncartoned aerosol products.

Palletized or solid-piled storage configurations do not pose conditions that are conducive to fast fire growth associated with rack storage, but they can result in persistent fires if sprinklers are not designed for proper protection.

(Continues)

EDUFIRE.IR

CLOSER LOOK [26.3.1] *Continued*

Early aerosol fire tests showed that standard spray sprinkler protection had difficulty controlling Level 2 and Level 3 aerosol products as classified in Section 1.7 of NFPA 30B (see the last paragraph in this commentary) stacked more than 5 ft (1.5 m) high under a 30 ft (9.1 m) ceiling. Concerns regarding this problem prompted the aerosol industry to institute a testing program to seek more cost-effective storage and protection alternatives. The initial test series in the program investigated a wide range of packaging and formulation variables and alternatives, which produced results that demonstrated no significant benefits compared with existing industry practices.

Further aerosol fire testing evaluated higher water densities and larger orifice sprinkler heads to protect higher stacking in palletized storage arrays of Level 1, Level 2, and Level 3 aerosol products under low-to-medium ceiling heights of 20 ft to 25 ft (6.1 m to 7.6 m). Numerous successful protection alternatives were found. To properly protect each class of aerosol product stored in greater stack height and greater ceiling height scenarios, it was found that higher water densities from larger orifice 17/32 in. to 0.64 in. (13 mm to 16 mm) sprinklers fitted with low-temperature fusible links of 160°F (71°C) were required.

Improvement in aerosol fire protection was also achieved by using faster-response ESFR sprinklers. Fitted with low-temperature links of 160°F (71°C) with a response time index (RTI) of 50, these sprinklers are capable of protecting high-stack palletized aerosol product storage under ceilings up to 30 ft (9.1 m) high, as well as rack storage without in-rack sprinklers. ESFR testing has demonstrated fire control, quick suppression, and, in some cases, total extinguishment. This scenario is true for both cardboard and plastic-wrapped aerosol product arrays. Table 6.4.2.7(a) through Table 6.4.2.7(d) and Figure 6.4.2.7(a) through Figure 6.4.2.7(e) of NFPA 30B provide the requirements and sprinkler configurations for palletized and solid-piled storage of both cartoned and uncartoned aerosol products.

To use the design information in NFPA 30B, the classification of the product being protected must be known. Precautionary labeling for aerosol products, including flammability hazards during use of the product, is regulated by several federal agencies under a number of federal statutes. Labeling of aerosol disinfectants and sanitizers, as well as insecticides and herbicides, is strictly regulated. Also, in accordance with NFPA 30B, manufacturers of aerosol products must ensure that all cartons or packages of aerosol products are identified on at least one side with the classification of the aerosol products contained therein. Cartons or packages must be clearly marked "Level ___ Aerosols." The classification levels are defined as follows:

1. Level 1 aerosol products are those with a total chemical heat of combustion less than or equal to 8600 Btu/lb (20 kJ/g).
2. Level 2 aerosol products are those with a total chemical heat of combustion greater than 8600 Btu/lb (20 kJ/g) but less than or equal to 13,000 Btu/lb (30 kJ/g).
3. Level 3 aerosol products are those with a total chemical heat of combustion greater than 13,000 Btu/lb (30 kJ/g).

26.4 Spray Application Using Flammable or Combustible Materials.

26.4.1 Design Requirements.

26.4.1.1* The automatic sprinkler system shall be a wet pipe system, a dry pipe system, a preaction system, or an open-head deluge system, whichever is most appropriate for the portion of the spray operation being protected. [**33:**9.6.1]

A.26.4.1.1 Subsection 9.6.1 of NFPA 33 lists four types of automatic sprinkler systems and requires that the one "most appropriate for the portion of the spray area being protected" be used. Generally, an open-head deluge system provides the highest level of protection, given that all sprinklers in the protected area flow simultaneously. This type of system is most appropriate for large, downdraft, water-wash spray booths when protecting automatic electrostatic spray application zones. [**33:**A.9.6.1]

Wet pipe automatic sprinkler systems are appropriate for protecting spray booths that utilize nonelectrostatic application processes or operations using listed electrostatic application processes. Wet pipe systems are also generally used to protect exhaust plenums (eliminator or scrubber sections), exhaust ducts, and air recirculation filter houses. [**33:**A.9.6.1]

Dry pipe systems have been included because some exhaust duct designs include sections that are subject to freezing. [**33:**A.9.6.1]

EDUFIRE.IR

Preaction systems have been included because some spray application processes and equipment can be damaged by unwanted water discharge. This damage can be disruptive and costly. Powder spray booths and solvent concentrator (air pollution abatement) systems are examples of systems where it is appropriate to use a preaction system. [**33:**A.9.6.1]

NFPA 33, *Standard for Spray Application Using Flammable or Combustible Materials*, requires that a spray area be protected by an automatic fire protection system but not necessarily by a sprinkler system. Other types of systems, such as a dry chemical extinguishing system or a carbon dioxide system, can be used if the building itself is not protected by sprinklers. The usual situation is protection of an individual spray booth in a nonsprinklered building, such as an auto body shop. Such alternative systems might be more effective and more compatible, depending on the material being sprayed. The intent, however, is that a spray application process located in a sprinklered building should also be protected by sprinklers. By definition, the spray area includes the spray booth or room and the associated exhaust systems (exhaust plenum and ductwork). These same requirements apply to any room in which the materials to be spray-applied are prepared or mixed.

NFPA 33 does not require that a building be sprinklered just because of the presence of a spray application process. Spray application operations conducted outside a building are not within the scope of NFPA 33. Intermittent or occasional regular use of small portable spray application equipment or spray applications using aerosol products also are not within the scope of NFPA 33. Therefore, the fire protection requirements of NFPA 33 do not apply to such situations.

While deluge systems provide the greatest level of protection, their use is recommended for protection of a very limited number of operations. For most operations, wet pipe systems are preferred; dry pipe systems are not recommended due to the delay in delivering water after sprinkler activation.

An example of when a wet pipe sprinkler system might not be desired is spray painting operations in an automobile assembly plant. Because of their sheer size, complexity, and monetary value, such installations typically are protected with zoned deluge systems activated by fire detectors. Such systems activate much faster than a conventional sprinkler system, limiting both damage and costly downtime.

SEE ALSO

A.1.1.4 and A.1.1.6 of NFPA 33 for additional information.

26.4.1.2 The automatic sprinkler system shall be designed as follows:

(1) For spray application of styrene cross-link thermoset resin application areas, sprinklers shall be designed for Ordinary Hazard (Group 2) as defined in this standard.
(2) For powder coating operations, sprinklers shall be designed for Ordinary Hazard (Group 2), as defined in this standard.
(3) For all other spray areas, sprinklers shall be designed for Extra Hazard (Group 2) as defined in this standard.

[**33:**9.6.2]

26.4.1.3 The sprinkler design area shall not be required to exceed the area of the booth or room in which spraying or resin application is conducted. [**33:**9.6.2.1]

26.4.1.4 The water supply shall be sufficient to supply all sprinklers likely to open in any one fire incident without depleting the available water for use in hose streams. [**33:**9.6.3]

NFPA 33 permits the use of the building's domestic water supply, if it is capable of supplying the anticipated demand, to provide sprinkler protection for a spray application process. This arrangement is an acceptable alternative to a special agent system, such as dry chemical or carbon dioxide, and would be a desirable means of protecting a small open-front spray booth.

26.4.1.5 Where sprinklers are installed to protect spray areas and mixing rooms only, water shall be permitted to be supplied from domestic water systems, provided the domestic supply can meet the design criteria of 26.4.1.2. [**33:**9.6.4]

26.4.1.6 The sprinkler system shall be controlled by a separate, listed indicating valve(s), operable from floor level. [**33:**9.6.5]

EDUFIRE.IR

26.4.1.7 Automated liquid electrostatic spray application equipment that is unlisted shall be protected further by the following:

(1) In addition to meeting the requirements in 9.9.1 of NFPA 33, the optical flame detection system shall also activate one of the following over each zone in which fire has been detected:

(a) An open head deluge system designed to discharge a minimum density of 24.5 mm/min (0.6 gpm/ft^2)
(b) A carbon dioxide extinguishing system
(c) A dry chemical extinguishing system
(d) A gaseous agent extinguishing system
(e) A water mist fire protection system

[**33:**9.9.2(1)]

(2) A wet pipe sprinkler system shall also be provided throughout the spray booth. This system shall meet all the applicable requirements of this standard for Extra Hazard (Group 2) occupancies.

[**33:**9.9.2(3)]

26.4.2 Installation Requirements.

26.4.2.1* Sprinkler systems protecting stacks or ducts with widths or diameters equal to or greater than 10 in. (0.25 m) but less than 12 ft (3.7 m) shall meet all of the following requirements:

A.26.4.2.1 Water supply requirements for most industrial paint spray operations should be adequate to supply all automatic sprinklers in the spray area. Loss experience has shown that fires starting in the exhaust duct can spread to the spray booth and that fires starting in the booth can spread to the exhaust duct. [**33:**A.9.6.6]

Sprinklers or sprinkler systems protecting stacks or ducts should be of a type not subject to freezing. Automatic systems are preferred, but manual systems are also acceptable. Nonfreeze or dry-type sprinkler systems can be used in ducts subject to freezing. For some industries, such as the automotive industry, manually operated open-head systems have proved to be effective protection for ducts and stacks. [**33:**A.9.6.6]

Ductwork in powder coating applications does not require fire protection. Based on design duct velocity, there is no accumulation of residual powder. [**33:**A.9.6.6]

(1) One sprinkler shall be located at the top of each vertical riser and at the midpoint of each offset. Additional sprinklers shall be spaced on 24 ft (7.3 m) centers if the rise is greater than 24 ft (7.3 m).
(2) Horizontal exhaust ducts shall have sprinklers located on 12 ft (3.7 m) centers beginning no more than 6 ft (1.7 m) from the duct entrance.
(3) If exhaust ducts are manifolded, a sprinkler shall be located in the manifold at the junction of each exhaust duct with the manifold.
(4) Sprinklers shall provide a minimum flow of 30 gpm (114 L/min) per head at a minimum of 15 psi (1 bar) pressure.
(5) Sprinklers shall be ordinary temperature rated, unless required to be higher due to operating temperatures measured in the ducts, in which case the operating temperature shall be at least 50°F (28°C) above the inside temperature of the duct.
(6)* The system demand shall include the discharge from the hydraulically most remote adjacent sprinklers in a common 100 linear ft (30.5 m) area of duct (horizontal and/or vertical).

A.26.4.2.1(6) Consideration should be given to duct areas resulting in the highest sprinkler discharge demand. This might actually include multiple paths of ducts, provided the total length of the ducts considered does not exceed 100 linear ft (30.5 m) and all subsections of ducts are interconnected. [**33:** A.9.6.6(6)]

EDUFIRE.IR

While a developing fire might follow the direction of airflow and vertical rise in the ducts, it should not be assumed that a fire will only occur while the system is operating. Operations such as cutting and welding can result in ignition of residues inside the duct while equipment is idle. [**33:** A.9.6.6(6)]

It is not anticipated that both the building ceiling and spray area systems will operate simultaneously if installed in accordance with both NFPA 33 and this standard, so a total demand including both building ceiling and spray area systems is not required by this section. [**33:** A.9.6.6(6)]

(7)* The supply line to the duct sprinklers, if taken from the ceiling sprinkler system, shall be equipped with an accessible listed control valve.

[**33:**9.6.6]

A.26.4.2.1(7) Minimal hose streams might be needed to effect final extinguishment if the fire is limited to inside the stack alone. To determine water supply requirements, see 26.4.1.4 for guidance. [**33:**A.9.6.6(7)]

26.4.2.1.1 Stacks and exhaust ducts shall be provided with access openings for inspection and cleaning of sprinklers. [**33:**9.6.6.1]

26.4.2.1.2 Sprinkler systems protecting stacks and ducts that are subject to freezing shall be of a nonfreezing type or be a manually controlled open-head system. [**33:**9.6.6.2]

26.4.2.2 Sprinklers shall be protected against overspray residue, either by location or covering, so that they will operate quickly in event of fire. [**33:**9.6.7]

One day's accumulation of overspray is enough to insulate a fusible link or to choke the orifice of an open sprinkler on a deluge system to the extent that the sprinkler will not function as intended.

26.4.2.2.1 Sprinklers shall be permitted to be covered only by cellophane bags having a thickness of 0.003 in. (0.08 mm) or less or by thin paper bags. These coverings shall be replaced frequently so that heavy deposits of residue do not accumulate. [**33:**9.6.7.1]

26.4.2.2.2 Sprinklers that have been painted or coated by overspray or residues shall be replaced with new sprinklers. [**33:**9.6.7.2]

26.5 Solvent Extraction Plants. [NFPA 36]

26.5.1* Design Requirements.

NFPA 36, *Standard for Solvent Extraction Plants,* requires a water spray system, a deluge system, a foam-water sprinkler system, or a combination of those systems for extraction process equipment and the structure in which that equipment is located. NFPA 36 also requires automatic sprinkler protection for the area where the oil-bearing seeds are prepared prior to extraction. Although no particular density is mandated, the design criteria of NFPA 36 are recommended and are considered acceptable. If the extraction process involves more than 10,000 lb (4540 kg) of flammable solvent, the U.S. Occupational Safety and Health Administration (OSHA) Process Safety Management Rule in 29 CFR 1910.119 is applicable. [This amount is only about 1800 gal (6800 L) of hexane.] Based on a process hazard evaluation, the sprinkler system design criteria recommended by NFPA 36 might or might not be considered adequate.

A.26.5.1 Water spray or deluge systems that are used to protect solvent extraction process equipment or structures should be designed to provide a density of not less than 0.25 gpm/ft^2 (10.2 mm/min) of protected surface area. See this standard and NFPA 15 for additional information. Foam-water sprinkler or deluge systems that are used for the same purposes should be designed to provide a density of not less than 0.16 gpm/ft^2 (6.5 mm/min) of protected surface area. See this standard and NFPA 16 for additional information. Preparation buildings should

EDUFIRE.IR

be protected with automatic sprinkler systems designed for Ordinary Hazard (Group 2), in accordance with this standard. [**36:**A.4.9]

26.5.2 Installation Requirements. (Reserved)

26.6 Installation and Use of Stationary Combustion Engines and Gas Turbines.

26.6.1* Design Requirements. Automatic sprinkler systems shall be designed to provide for a density of 0.3 gpm/ft^2 (12.2 mm/min) over the most remote 2500 ft^2 (230 m^2). [**37:**11.4.5.1]

A.26.6.1 Automatic sprinkler systems are considered to be effective in controlling lubricating oil fires. Sprinkler densities provided in this standard are based on Extra Hazard, Group 1 occupancy as defined in this standard. Automatic sprinkler protection designed as local protection for the engine in many cases provides better protection than sprinkler protection installed only at the ceiling level, particularly in the case of pressurized lubricating oil fires. [**37:**A.11.4.5.1]

Consideration should be given to providing local protection when the protected engine equipment is located in a high bay area. Delayed activation time or lack of water penetration could delay fire suppression from a ceiling system. [**37:**A.11.4.5.1]

Local protection for engines can be accomplished using either a wet system or a single interlock pre-action deluge system with heat detection. Detectors for actuation of a pre-action system should be located above the engine and around the system piping.

For diesel engine installations, the system piping should loop the engine at the height of the cylinder heads. [**37:**A.11.4.5.1]

Because of the tight radial clearances on combustion gas turbines and the potential for rubbing of rotating parts and increased damage, it is advisable to use great care if using a sprinkler or water spray suppression system. Water from a ceiling or spot protection system could effectively control a fire; however, gaseous suppression agents could be just as effective without the potential for equipment damage when the system activates. [**37:** A.11.4.5.1]

26.6.2 Installation Requirements.

26.6.2.1 Sprinklers and spray nozzles shall be spaced at a 100 ft^2 (9 m^2) maximum area of coverage per sprinkler or spray nozzle. [**37:**11.4.5.1.1]

26.6.2.2 Sprinkler and water spray system coverage shall be provided to all areas within the enclosure located within 20 ft (6 m) of the following:

(1) The engine
(2) The lubricating oil system
(3) The fuel system
[**37:**11.4.5.1.2]

26.6.2.3 Sprinklers and water spray nozzles shall not be directed at engine components that are susceptible to thermal shock or deformation. [**37:**11.4.5.2]

26.7 Nitrate Film.

Cellulose nitrate film has not been used for approximately 50 years, but there are collections of nitrate films and negatives (flat film) that are stored for archival purposes. Because of the relative scarcity of cellulose

EDUFIRE.IR

nitrate film, there are few cellulose nitrate film storage facilities. However, the material that is stored is often of great historical value. For example, the Library of Congress has a facility that stores cellulose nitrate film documents that are of significance to the United States.

Cellulose nitrate has stringent storage requirements because it is an extremely energetic material. Cellulose nitrate was the main component of "single base" gunpowder. When ignited, it will burn rapidly, and, if contained, it can explode. Cellulose nitrate has the potential for exothermic decomposition. Sprinklers can be effective in stopping those reactions.

26.7.1 Design Requirements.

26.7.1.1 Every room, except projection booths and rewinding rooms, where nitrate film is stored or handled in quantities greater than 51 lb (23 kg), or 10,000 ft (3050 m), shall be protected by an automatic sprinkler system that is installed in accordance with the requirements for Group II extra hazard occupancies. [**40:**5.1.2]

26.7.1.2 Water supplies for automatic sprinklers shall be based on 20 gpm (1.26 L/sec) per sprinkler for 20 minutes for the total number of sprinklers in one vault plus 25 percent of the sprinklers in the communicating fire area. [**40:**5.2.2]

26.7.1.3* Vaults Other Than Extended Term Storage Vaults. [**40:**6.3] *(See Figure A.26.7.1.3.)* Fire protection in vaults shall be provided by a deluge system with directional nozzles meeting the criteria in 26.7.1.4. [**40:**6.3.7]

A.26.7.1.3 See Figure A.26.7.1.3. The illustration shows the location of sprinklers and the decomposition vent. [**40:**A.6.3]

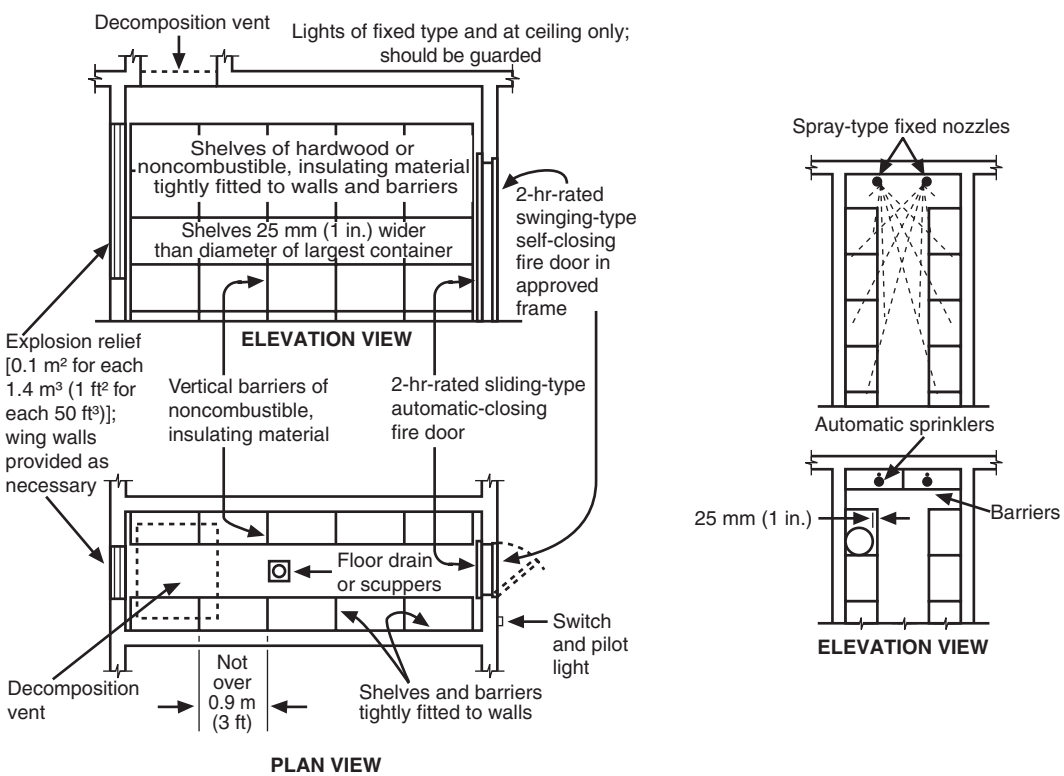

FIGURE A.26.7.1.3 *Standard Film Vault (for Other Than Extended Term Storage Film). [40:Figure A.6.3]*

EDUFIRE.IR

26.7.1.4 For extended term storage vaults in accordance with 6.5.5 of NFPA 40, fire protection shall be provided by a deluge system with directional nozzles installed in accordance with NFPA 15 and meeting the criteria in 26.7.1.4.1 through 26.7.1.4.9. [**40:**6.5.6]

26.7.1.4.1 Sprinkler systems in existing extended term storage vaults that were in compliance with the provisions of this standard at the time of installation shall be permitted to be continued in use. [**40:**6.5.6.1]

26.7.1.4.2 High-velocity open water spray nozzles each capable of providing a discharge rate of 20 gpm (1.26 L/sec) at a gauge pressure of 50 psi (345 kPa) shall be installed. [**40:**6.5.6.2]

26.7.1.4.3 The design shall be based on a discharge density of 0.68 gpm/ft^2 (27 mm/min) over each face of storage racks. [**40:**6.5.6.3]

26.7.1.4.4* The nozzles shall have a combined spray pattern capable of covering the face of the film storage racks. [**40:**6.5.6.4]

A.26.7.1.4.4 One acceptable nozzle spray pattern would be such that at an 8 ft (2.4 m) distance the cone is about 5 ft (1.5 m) in diameter. See Figure A.26.7.1.4.4. [**40:** A.6.5.6.4]

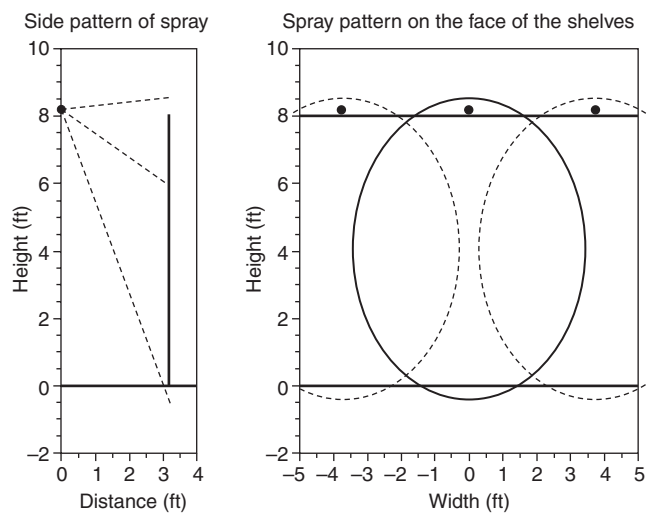

Note: 1 ft = 0.3 m.

FIGURE A.26.7.1.4.4 *Typical Nozzle Spray Pattern. [40:Figure A.6.5.6.4]*

26.7.1.4.5 The nozzles shall be installed at the top of the storage shelf array, aimed at the opposite shelf array. [**40:**6.5.6.5]

26.7.1.4.6* Nozzles shall be installed on opposite faces of the storage shelf array in a staggered pattern such that no nozzles are directly opposite one another. [**40:**6.5.6.6]

A.26.7.1.4.6 Figure A.26.7.1.4.6(a) shows an example of a nozzle layout consistent with the recommended arrangement for a vault design as shown in Figure A.26.7.1.4.6(b). [**40:** A.6.5.6.6]

26.7.1.4.7 The water supply duration shall be a minimum of 20 minutes. [**40:**6.5.6.7]

EDUFIRE.IR

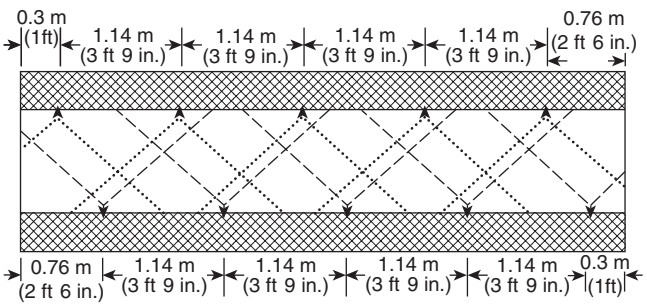

FIGURE A.26.7.1.4.6(a) *Nozzle Layout for Typical Vault. [40:Figure A.6.5.6.6(a)]*

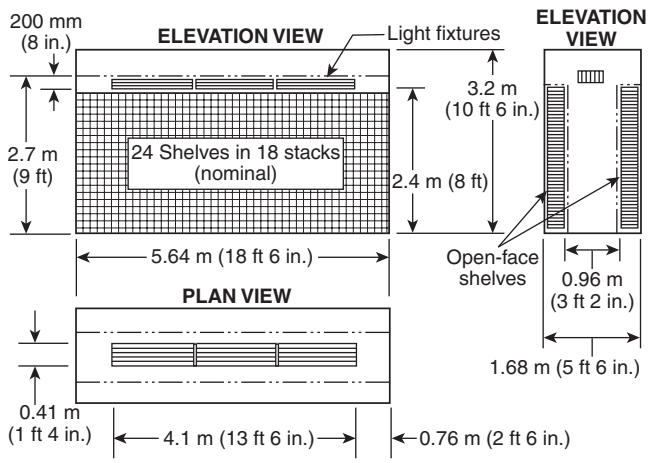

FIGURE A.26.7.1.4.6(b) *Typical Vault Layout. [40:Figure A.6.5.6.6(b)]*

26.7.1.4.8 The deluge system shall be activated by a signal from one of the following:

(1) An air sampling–type smoke detection system
(2) A fixed temperature heat sensitive cable
[**40:**6.5.6.8]

26.7.1.4.9 Full water flow shall be discharged from the water spray nozzles within 10 seconds of reaching the set point actuation of the detection system [**40:**6.5.6.9.6]

26.7.2 Installation Requirements.

26.7.2.1 In areas or rooms where nitrate film is handled, the area that is protected per sprinkler shall not exceed 64 ft^2 (5.9 m^2) with sprinklers not being more than 8 ft (2.4 m) apart. [**40:**5.1.4]

26.7.2.2 Cabinet Protection. [**40:**6.2.5]

26.7.2.2.1 Cabinets having a capacity of more than 75 lb (34 kg), or 15,000 ft (4575 m), of film shall be provided with at least one automatic sprinkler. [**40:**6.2.5.1]

26.7.2.2.2 Where cans are stored on more than one shelf, as shown in Figure 26.7.2.2.2 and as described in 6.2.6.2 or 6.2.6.3 of NFPA 40, one sprinkler shall be provided for each shelf. [**40:**6.2.5.2]

26.7.2.3 Motion Picture Film Laboratories. In all cases, sprinklers shall be arranged so that not more than two machines are protected by any one sprinkler. [**40:**9.2.5.2]

Because film is more vulnerable during processing, the number of machines per sprinkler must be limited.

26.8 Laboratories Using Chemicals.

26.8.1 Design Requirements. Automatic sprinkler system protection shall be required for all new laboratories in accordance with the following:

EDUFIRE.IR

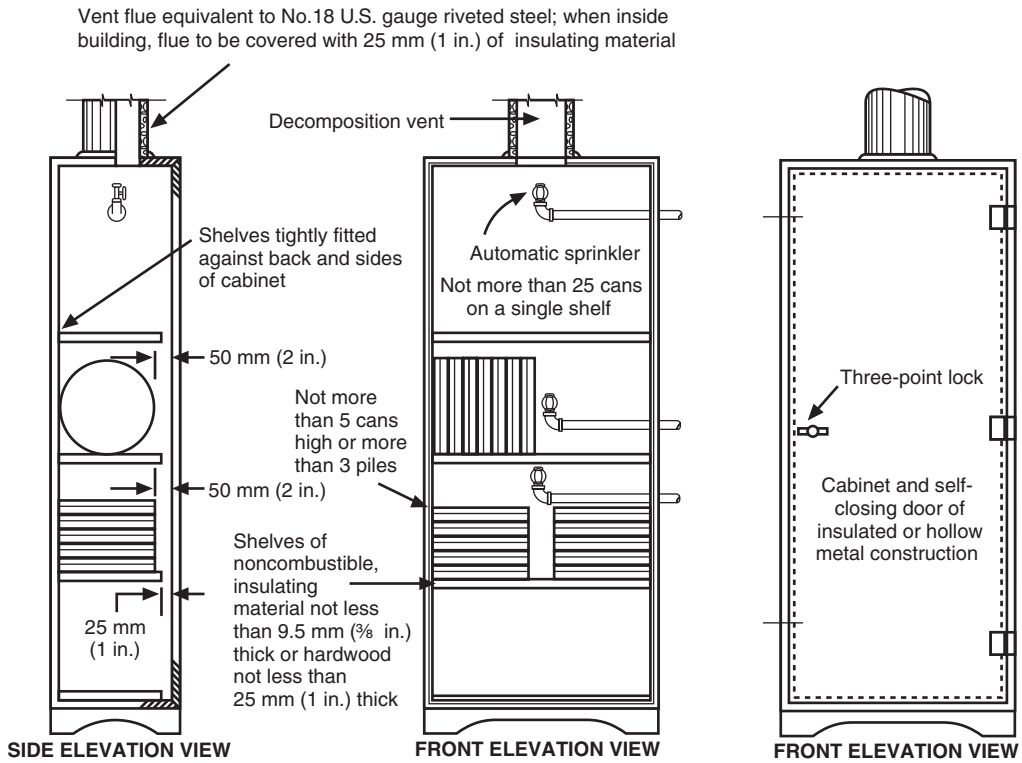

FIGURE 26.7.2.2.2 *Standard Film Cabinet for Other Than Extended Term Storage Film. [40:Figure 6.2.1]*

(1) Automatic sprinkler system protection for Class A and Class B laboratories shall be in accordance with this standard for ordinary hazard (Group 2) occupancies.
(2) Automatic sprinkler system protection for Class C and Class D laboratories shall be in accordance with this standard for ordinary hazard (Group 1) occupancies.

[**45:**6.1.1.1]

Both the fire hazard classification of a laboratory and the requirement for sprinklers depend on the volume of chemicals in the particular laboratory, the construction of the building, and the size of the laboratory unit. For all classes of laboratories, the use of sprinklers permits greater quantities of chemicals to be used in the laboratory; permits the laboratory, in some cases, to be larger; and permits a reduction in fire separation or the omission of fire separation from nonlaboratory areas.

Fire hazards are designated as Class A to Class D and represent a range of hazards, from potentially high fire hazard to minimal fire hazard, respectively. As the overall potential hazard increases, the required sprinkler application rate increases; hence, Class A and Class B laboratories are considered ordinary hazard (Group 2) occupancies, and Class C and Class D labs are considered ordinary hazard (Group 1) occupancies. Although Class A and Class B laboratories are permitted to contain the largest quantity of chemicals, compared to Class C and Class D labs, such laboratories are required to be sprinklered and to have a greater fire separation, and they are not permitted to be larger than 10,000 ft^2 (930 m^2). In Class C and Class D laboratories, the presence of sprinklers permits the maximum quantities of chemicals per laboratory unit to be approximately doubled.

26.8.2 Installation Requirements. Fire sprinklers in laboratory units shall be the quick response (QR) sprinkler type installed in accordance with this standard. [**45:**6.1.1.2]

EDUFIRE.IR

26.9 Oxygen-Fuel Gas Systems for Welding, Cutting, and Allied Processes.

26.9.1 Design Requirements.

26.9.1.1 Oxygen cylinders connected to one manifold shall be limited to a total gas capacity of 6500 ft^3 (184 m^3). [**51:**5.2.5]

26.9.1.1.1 Two such manifolds with connected cylinders shall be permitted to be located in the same room, provided the building is protected throughout with an approved automatic sprinkler system designed in accordance with this standard, furnishing a sprinkler discharge density of at least 0.25 gpm/ft^2 (10.2 mm/min) over a minimum operating area of at least 3000 ft^2 (280 m^2) with sprinklers located not more than 20 ft (6.1 m) above the floor where the manifolds are located. [**51:**5.2.5.1]

26.9.1.2 An automatic deluge sprinkler system shall be provided for MATS fire areas used as indoor and outdoor discharging stations. [**51:**10.5.8.1.1]

26.9.1.3 Automatic deluge sprinkler systems shall be designed in accordance with the requirements of this standard using Extra Hazard Group 1 with a minimum design area of 2500 ft^2 (232 m^2) for the entire MATS fire area. [**51:**10.5.8.1.2]

26.9.1.4 The automatic deluge system shall be able to be activated automatically by a fast-acting fire detection system and also by at least one manual pull station in an accessible location at a minimum of 25 ft (7.6 m) from the MATS fire area. [**51:**10.5.8.1.3]

26.9.1.5 The requirements of 26.9.1.2, 26.9.1.3, and 26.9.1.4 shall not apply to existing indoor or outdoor facilities, equipment, structures, or installations where MATS are charged or discharged that existed or were approved for construction or installation prior to the effective date of this standard, providing the MATS fire area is protected with an automatic sprinkler or deluge system with a minimum design density of not less than 0.25 gm/ft^2 (10.1 mm/min). [**51:**10.5.8.1.4.1]

26.9.2 Installation Requirements.

26.9.2.1 In buildings protected by an automatic sprinkler system and water supply designed in accordance with this standard for an Ordinary Hazard Group 2 or more hazardous occupancy, where the occupancy other than the cylinder storage is not more hazardous than ordinary hazard as defined in this standard, the distance between designated storage areas shall be permitted to be reduced to 50 ft (15 m). [**51:**4.3.4.1]

26.9.2.2 If the occupancy in such protected buildings between the designated storage areas is free of combustible material, the distance shall be permitted to be reduced to 25 ft (7.6 m). [**51:**4.3.4.2]

26.10 Acetylene Cylinder Charging Plants.

Acetylene is an extremely energetic and unstable chemical. Under typical ambient conditions, it decomposes slowly enough that it can be safely stored. However, when exposed to elevated temperatures [in the 482°F (250°C) to 536°F (280°C) range], the heat generated by decomposition might not safely dissipate, and the acetylene could react violently. Because of its instability, acetylene is typically dissolved in acetone or other solvents that are retained on porous silica media in a cylinder. This configuration provides relatively stable acetylene storage.

EDUFIRE.IR

Acetylene is produced by the reaction of calcium carbide with water. Because of that reaction, sprinklers cannot be used in the acetylene production portion of a facility.

26.10.1 Design Requirements.

26.10.1.1 An automatic deluge sprinkler system shall be provided for MATS fire areas used as indoor and outdoor charging and discharging stations. [**55:**15.3.9.1.1]

26.10.1.2 Automatic deluge sprinkler systems shall be designed in accordance with the requirements of this standard using Extra Hazard Group 1 with a minimum design area of 2500 ft^2 for the entire MATS fire area. [**55:**15.3.9.1.2]

26.10.1.3 The automatic deluge system shall be able to be activated automatically by a fast-acting fire detection system and also by at least one manual pull station in an accessible location at a minimum of 25 ft (7.6 m) from the MATS fire area. [**55:**15.3.9.1.3]

26.10.2 Installation Requirements. (Reserved)

26.11 Compressed Gases and Cryogenic Fluids Code.

26.11.1 Design Criteria.

26.11.1.1 When sprinkler protection is required, the area in which compressed gases or cryogenic fluids are stored or used shall be protected with a sprinkler system designed to be not less than that required by 19.3.3.1.1 for Ordinary Hazard Group 2 density/area curve. [**55:**6.11.2.1]

26.11.1.2 Where sprinkler protection is required, the area in which the flammable or pyrophoric compressed gases or cryogenic fluids are stored or used shall be protected with a sprinkler system designed to be not less than that required by 19.3.3.1.1 for Extra Hazard Group 1 density/area curve. [**55:**6.11.2.2]

26.11.2 Installation Requirements. (Reserved)

26.12 Utility LP-Gas Plants.

26.12.1 Design Requirements.

26.12.1.1 The design of fire water supply and distribution systems, where used, shall provide for the simultaneous supply of those fixed fire protection systems involved in the maximum single incident expected in the plant, including monitor nozzles, at their design flow and pressure. [**59:**13.4.2]

26.12.1.2 An additional supply of 1000 gal/min (3800 lpm) shall be available for hand hose streams for a period of not less than 2 hours. [**59:**13.4.2.1]

26.12.1.3 Manually actuated monitors shall be permitted to be used to augment hand hose streams. [**59:**13.4.2.2]

26.12.2 Installation Requirements. (Reserved)

EDUFIRE.IR

26.13 Production, Storage, and Handling of Liquefied Natural Gas (LNG).

26.13.1 Design Requirements. The fire water supply and distribution systems, if provided, shall simultaneously supply water to fixed fire protection systems, including monitor nozzles, at their design flow and pressure, involved in the maximum single incident expected in the plant plus an allowance of 1000 gpm (3800 lpm) for hand hose streams for not less than 2 hours. [**59A:**12.5.2]

26.13.2 Installation Requirements. (Reserved)

26.14 Protection of Information Technology Equipment.

26.14.1 Design Requirements. (Reserved)

26.14.2 Installation Requirements.

26.14.2.1 ITE rooms and ITE areas located in a sprinklered building shall be provided with an automatic sprinkler system. [**75:**9.1.1]

26.14.2.1.1 ITE rooms and ITE areas located in a nonsprinklered building shall be provided with one or more automatic fire suppression systems as permitted by Chapter 9 of NFPA 75.

26.14.2.2 Sprinkler systems protecting ITE areas shall be valved separately from other sprinkler systems. [**75:**9.1.3]

26.14.2.3 The requirement of 9.1.1.1 of NFPA 75 shall be permitted to be evaluated as part of the fire risk assessment as outlined in Chapter 4 of NFPA 75. [**75:**9.1.1.2]

26.14.2.4* An automatic fire suppression system, as permitted by Chapter 9 of NFPA 75, shall be provided for the protection of the area below a raised floor in an ITE room or ITE area where the area below the raised floor contains combustible material other than what is permitted in 26.14.2.5. [**75:**9.1.1.3]

A.26.14.2.4 The use of carbon dioxide systems for the protection of spaces beneath raised floors is discussed in Section B.5 of NFPA 12 wherein it is pointed out that the design of such systems requires compensation for leakage and provision for a soft discharge to minimize turbulence and agent loss through perforated tiles. These same concerns exist for other inert gas clean agent systems installed in accordance with NFPA 2001. Since these spaces are usually of a very limited height, this type of fire suppression system may be easier to design and install than sprinklers. [**75:**A.9.1.1.3]

The use of halocarbon agents for protection of the spaces under a raised floor where the room is not simultaneously protected is not recommended. However, where a room is protected by a halocarbon system, the space beneath its raised floor needs to be included in the system coverage. [**75:**A.9.1.1.3]

26.14.2.5 An automatic fire suppression system shall not be required for the protection of the area below a raised floor in an ITE room or ITE area where combustible material under the floor is limited to the following:

(1) Cables listed for plenum use
(2) Listed plenum communications raceways

EDUFIRE.IR

(3) Listed equipment power cords up to 15 ft (4.6 m) each
(4) Cables installed in metallic raceways
(5) Installations in compliance with Section 300.22(C) of *NFPA 70*
(6) Listed cooling hoses

[**75:**9.1.1.4]

26.15 Standard on Incinerators, and Waste and Linen Handling Systems and Equipment.

26.15.1 Design Requirements. (Reserved)

26.15.2 Installation Requirements.

26.15.2.1 Automatic sprinklers shall be provided in incinerator rooms in accordance with this standard. [**82:**5.2.7.3]

26.15.2.2* Waste and Linen Chutes and Transport Systems. [**82:**Chapter 6]

A.26.15.2.2 See Figure A.26.15.2.2(a) through Figure A.26.15.2.2(h).

26.15.2.2.1 Gravity Waste or Linen Chutes. [**82:**6.2]

26.15.2.2.1.1 Lined metal chutes that comply with 6.2.2.6.1 of NFPA 82 shall not require automatic sprinkler protection. [**82:**6.2.2.6.2]

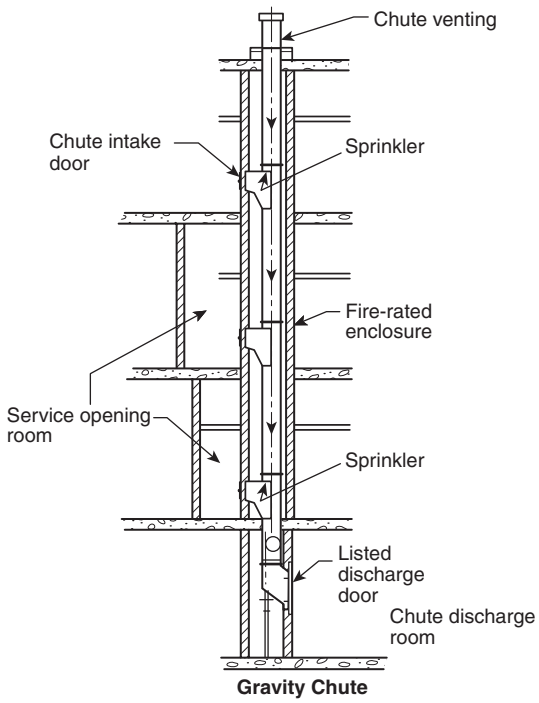

FIGURE A.26.15.2.2(a) *Gravity Linen Chute. [82:Figure A.6.2(a)]*

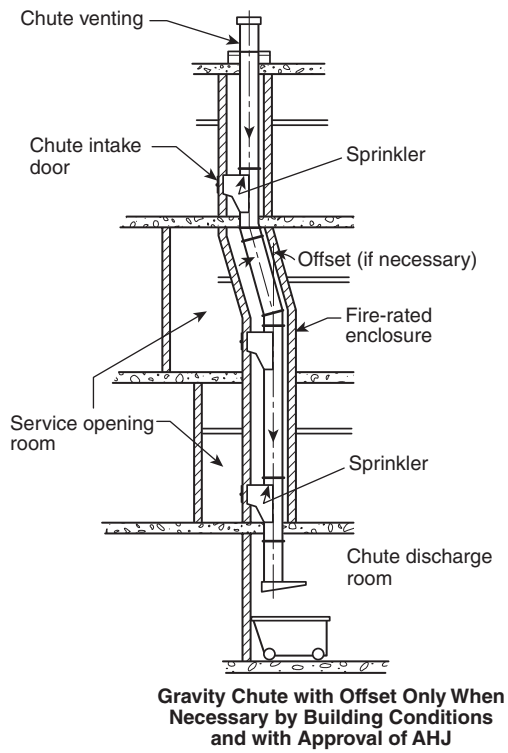

FIGURE A.26.15.2.2(b) *Gravity Waste Chute. [82:Figure A.6.2(b)]*

EDUFIRE.IR

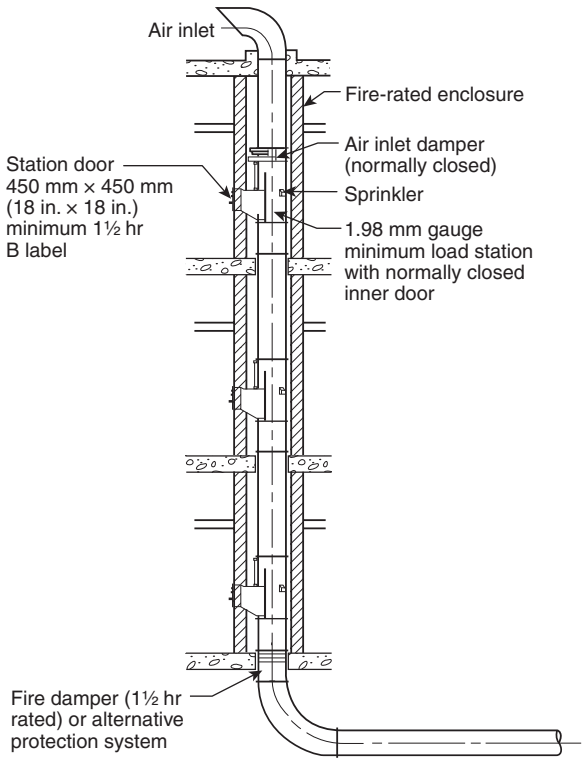

FIGURE A.26.15.2.2(c) *Full Pneumatic System. [82:Figure A.6.2(a)]*

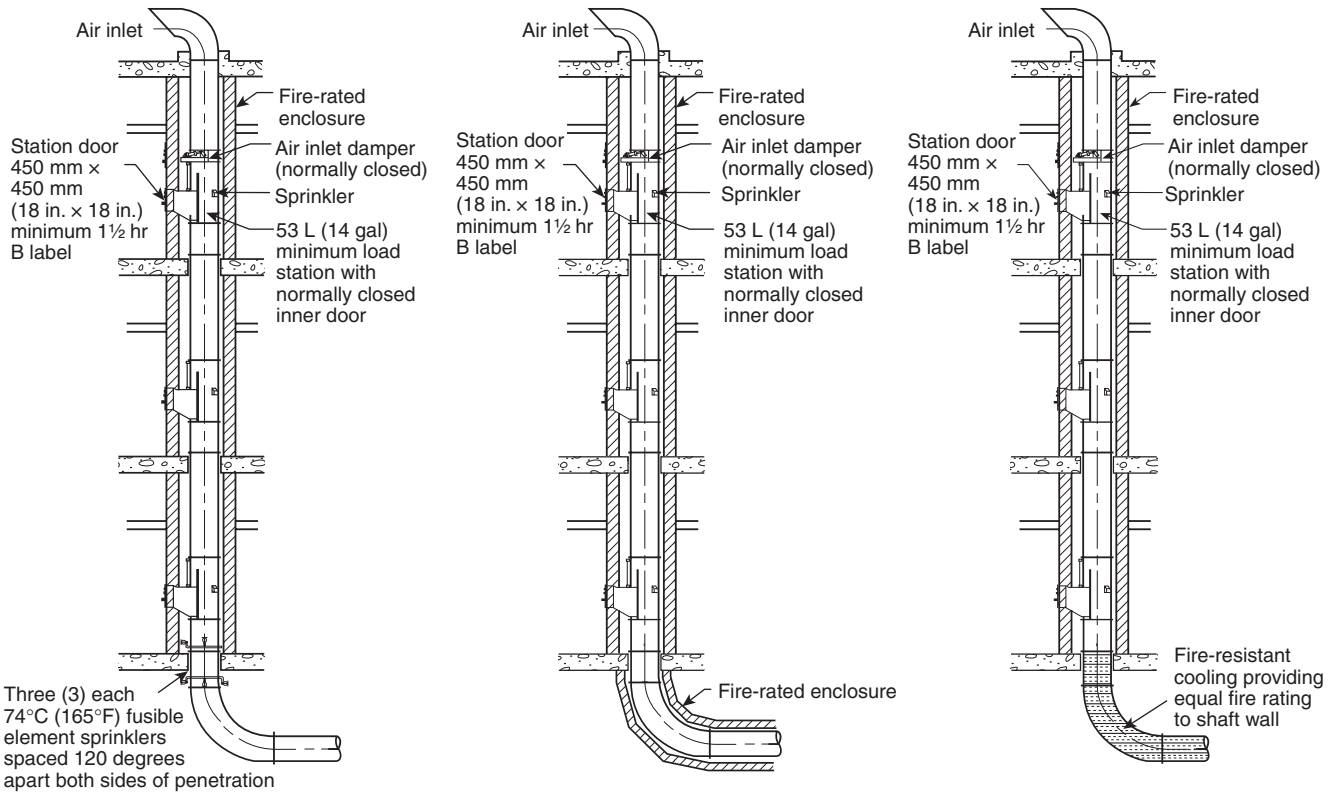

FIGURE A.26.15.2.2(d) *Fire Damper Engineering Alternative for Penetration of Floor at Base of Shaft. [82:Figure A.6.2(b)]*

EDUFIRE.IR

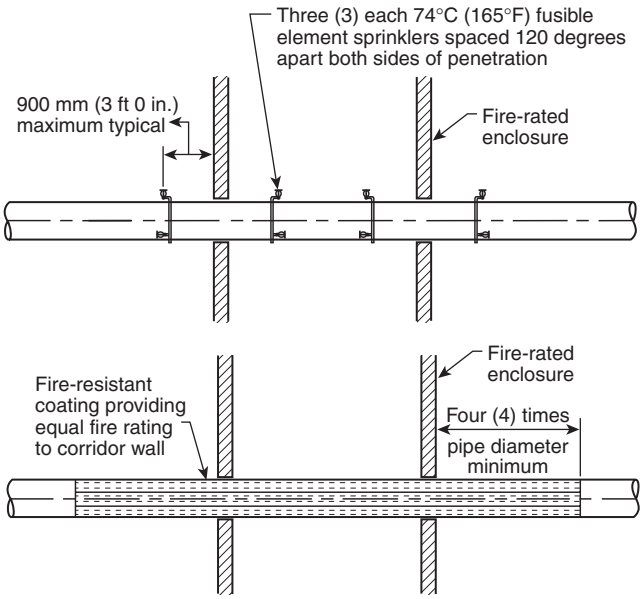

FIGURE A.26.15.2.2(e) *Fire Damper Engineering Alternative for Penetration of Fire-Rated Enclosure. [82:Figure A.6.2(c)]*

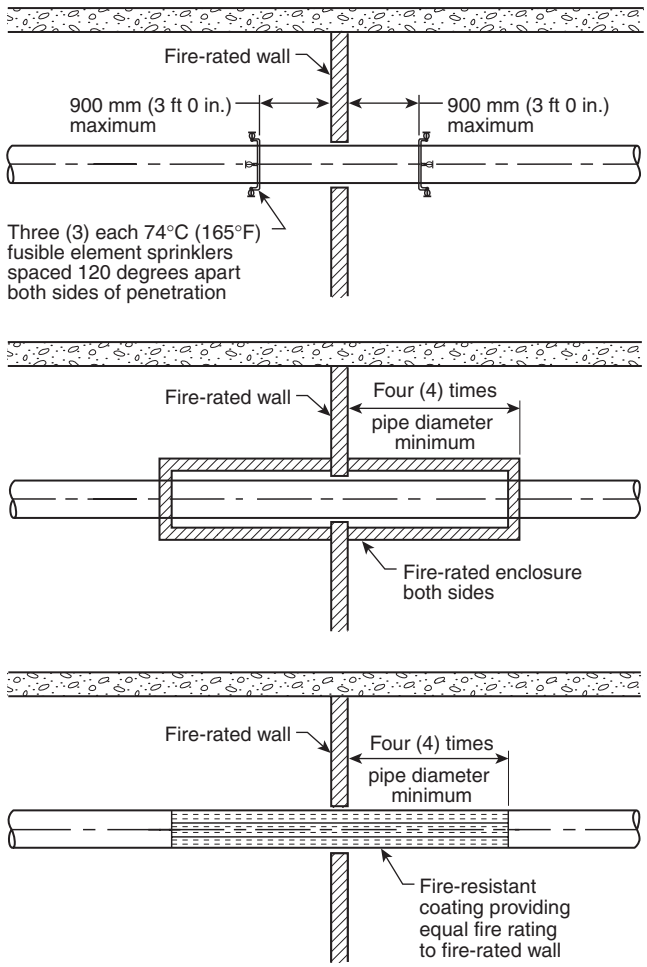

FIGURE A.26.15.2.2(f) *Fire Damper Engineering Alternative for Penetration of Fire-Rated Wall. [82:Figure A.6.2(d)]*

26.15.2.2.1.2 A sprinkler shall be installed at or above the top chute intake of the chute. [**82:**6.2.6.1.2]

To eliminate sprinklers in a masonry waste chute, the chute must be constructed of clay or shale brickwork not less than 8 in. (200 mm) thick or be constructed of reinforced concrete not less than 6 in. (150 mm) thick. The chute must also be lined with low-duty refractory brick that is not less than 4½ in. (115 mm) thick. The intent of this provision is to provide a separation between the chute and the building with at least a 2-hour fire resistance rating.

Only lined metal waste chutes are permitted to omit sprinklers. The metal waste chute must be lined with low-duty refractory brick not less than 2½ in. (65 mm) thick or equivalent castable refractories. All unlined steel chutes must be protected internally by automatic sprinklers.

Listed medium-heat appliance chimney sections are acceptable for use as trash chutes. These chimneys are listed to UL 103, *Factory-Built Chimneys for Residential Type and Building Heating Appliances,* and are used with appliances that produce maximum flue gas temperatures of 1800°F (982°C). They comprise listed, factory-built components that are suitable for open, nonenclosed use at specified minimum clearances to combustibles.

EDUFIRE.IR

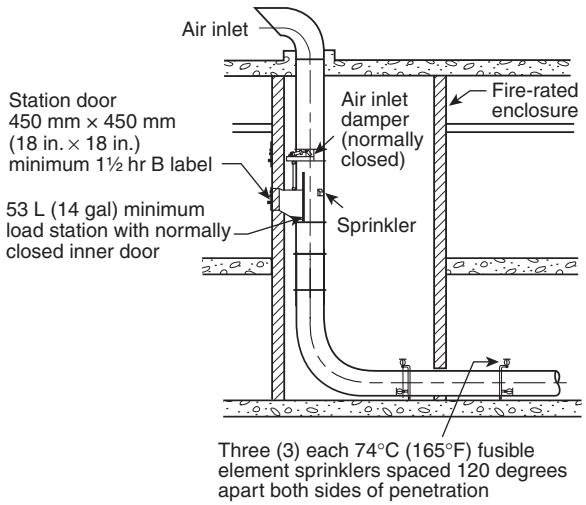

FIGURE A.26.15.2.2(g) *Fire Damper Engineering Alternative for Penetration of Wall at Base of Shaft. [82:Figure A.6.2(e)]*

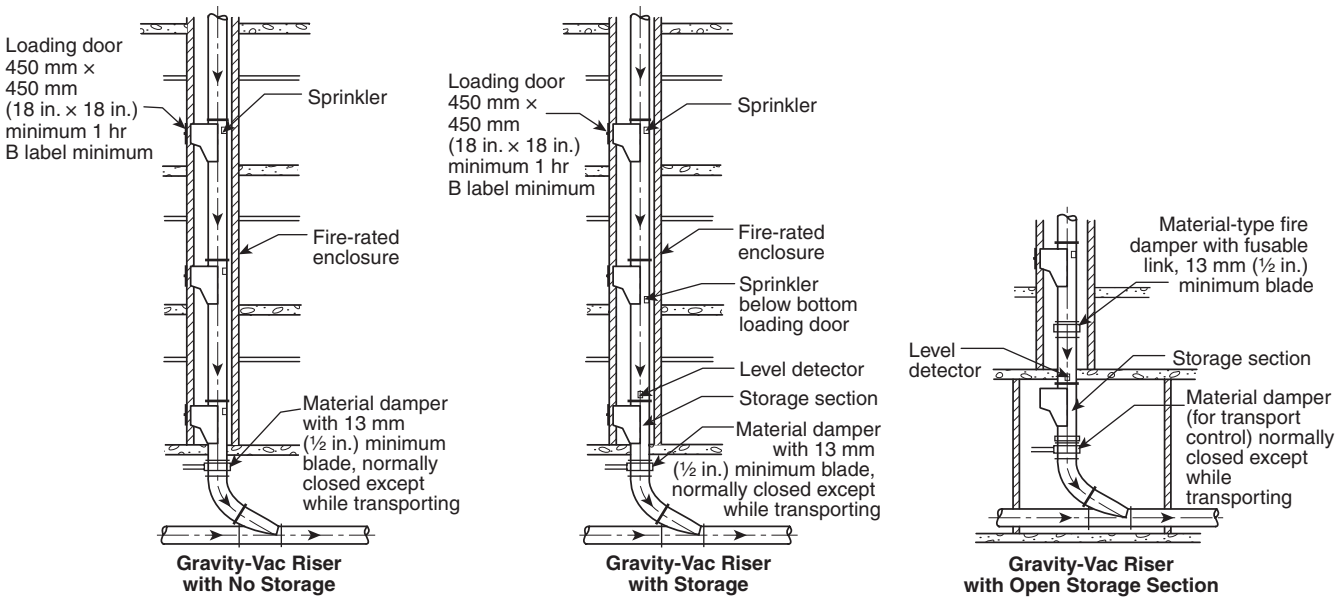

FIGURE A.26.15.2.2(h) *Gravity Pneumatic System. [82:Figure A.6.4]*

26.15.2.2.1.3 Chute Sprinkler Protection. Automatic sprinklers installed in gravity chute intakes shall be recessed out of the chute area through which the material travels. [**82:**6.2.6.1.3]

26.15.2.2.1.4 A sprinkler shall be installed within the chute at alternate floor levels in chutes connecting more than two stories, with a mandatory sprinkler located at the lowest service level. [**82:**6.2.6.1.4]

26.15.2.2.1.5 Gravity chutes shall be protected internally by automatic sprinklers unless the chute is in accordance with 6.2.2.5 or 6.2.2.6 of NFPA 82. [**82:**6.2.6.1.1]

EDUFIRE.IR

26.15.2.2.1.6 Chute Room Automatic Sprinklers. Automatic sprinklers shall be installed in chute discharge rooms. [**82:**6.2.6.2.1]

26.15.2.2.2 Full Pneumatic Waste and Linen Conveying Systems. [**82:**6.3]

26.15.2.2.2.1 Full pneumatic-type risers shall be protected internally by automatic sprinklers. [**82:**6.3.4.1]

26.15.2.2.2.2 A sprinkler shall be required at or above the top chute intake door and at alternate floor levels in buildings over two stories, with a mandatory sprinkler located at the lowest chute intake door. [**82:**6.3.4.2]

26.15.2.2.2.3 Sprinklers shall be recessed out of the station area through which the material travels. [**82:**6.3.4.3]

26.15.2.2.3 Gravity Pneumatic Trash or Linen Conveying Systems. [**82:**6.4]

Full pneumatic waste transport systems consist of full vacuum stations equipped with inner doors and a locked outer door, an air source at the top of the riser, an air inlet control damper, flanged riser piping, transport piping, collectors (receivers), a fan, and a fan damper. It is important to note that sprinklers are required only in the riser portions of full pneumatic systems. Figure A.26.15.2.2(c) illustrates a full pneumatic system with an offset. The user should note the sprinklers positioned in each of the risers.

26.15.2.2.3.1 Chute Automatic Sprinklers. Where material is to be stored at the bottom of the chute and above the riser discharge damper (above the transport tee), automatic sprinklers shall be installed below the last service door on the chute. [**82:**6.4.2.3]

26.15.2.2.3.2 Automatic sprinklers shall be installed in chute discharge rooms. [**82:**6.4.2.4.3]

26.15.2.3 Automatic Sprinklers. [82:7.4]

26.15.2.3.1 Automatic sprinklers shall be installed in rooms where waste handling systems and equipment are used to transport waste from interim storage areas to waste processing equipment, such as incinerators. [**82:**7.4.1]

26.15.2.3.2 In locations or rooms where waste handling systems and equipment are used for interim storage of waste only, the rooms shall be sprinklered in accordance with requirements specified in 26.15.2.4. [**82:**7.4.2]

26.15.2.4 Waste Compactors. [82:Chapter 8]

26.15.2.4.1 All chute-fed compactors shall have an automatic sprinkler with a minimum ½ in. (13 mm) orifice installed in the hopper of the compactor. [**82:**8.2.1]

26.15.2.4.2 Sprinklers shall be ordinary temperature-rated sprinklers. [**82:**8.2.1.1]

26.15.2.4.3 Sprinklers shall be supplied by a minimum of 1 in. (25 mm) ferrous piping or ¾ in. (20 mm) copper tubing line from the domestic cold water supply or by the building fire sprinkler system. [**82:**8.2.1.2]

26.15.2.4.4 Sprinkler water pipe shall be protected from freezing in outdoor installations. [**82:**8.2.1.3]

26.15.2.4.5 Hand-fed compactors located within a building and not operated in conjunction with a chute shall not require installation of an automatic sprinkler in the hopper. [**82:**8.2.2]

26.15.2.5 Waste and recyclables storage rooms shall be provided with automatic sprinklers in accordance with this standard. [**82:**9.3]

26.15.2.6 Rooms in which waste processing equipment is located shall be installed with automatic sprinklers. [**82:**10.4.1]

EDUFIRE.IR

26.16 Standard for Ovens and Furnaces.

26.16.1 Design Requirements. (Reserved)

26.16.2 Installation Requirements.

26.16.2.1* Where automatic sprinklers are provided, they shall be installed in accordance with this standard unless otherwise permitted by 26.16.2.2. [**86:**9.2.1]

A.26.16.2.1 Automatic sprinkler protection should be considered for ovens, furnaces, or related equipment if any of the following conditions exists:

(1) The material being processed is combustible.
(2) Racks, trays, spacers, or containers are combustible.
(3) There are areas where appreciable accumulations of combustible drippings or deposits are present on the inside of the oven surface or on racks, trays, and so forth.

The type of sprinklers and arrangement should be appropriate to the oven arrangement, interior ductwork, and the material passing through the oven. [**86:**A.9.2.1]

26.16.2.2 Where sprinklers that protect only ovens are installed and connection to a reliable fire protection water supply is not feasible, a domestic water supply connection shall be permitted to supply these sprinklers subject to the approval of the authority having jurisdiction. [**86:**9.2.2]

26.16.2.3 Where sprinklers are selected for the protection of ovens, furnaces, or related equipment, systems with only open sprinklers shall be installed where the following conditions exist:

(1) In equipment where temperatures can exceed 625°F (329°C)
(2) Where flash fire conditions can occur

[**86:**9.3.3]

26.16.2.4 Furnaces shall be located so as to minimize exposure to power equipment, process equipment, and sprinkler risers. [**86:**5.1.3.1]

26.16.2.5 Where water from a fixed protection system could come in contact with molten materials, such as molten salt or molten metal, shielding shall be provided to prevent water from contacting the molten material. [**86:**9.3.1]

26.16.2.6* Galvanized pipe shall not be used in sprinkler or water spray systems in ovens, furnaces, or related equipment. [**86:**9.3.2]

A.26.16.2.6 At elevated temperatures, galvanizing can flake off of pipe surfaces, and the flakes can collect at and obstruct the discharge of the fire suppression system. [**86:**A.9.3.2]

26.17 Health Care Facilities Code, Class A Hyperbaric Chambers.

26.17.1 Design Requirements.

26.17.1.1 A fixed water deluge extinguishing system shall be installed in all chamber compartments that are designed for manned operations. [**99:**14.2.6.2]

26.17.1.2 In chambers that consist of more than one chamber compartment (lock), the design of the deluge system shall meet the requirements of 26.17.1.1 when the chamber compartments are at different depths (pressures). [**99:**14.2.6.2.1]

EDUFIRE.IR

26.17.1.3 The deluge system in different compartments (locks) shall operate independently or simultaneously. [**99:**14.2.6.2.2]

26.17.1.4 Fixed deluge systems shall not be required in chamber compartments that are used strictly as personnel transfer compartments (locks) and for no other purposes. [**99:**14.2.6.2.3]

26.17.1.5* Manual activation and deactivation deluge controls shall be located at the operator's console and in each chamber compartment (lock) containing a deluge system. [**99:**14.2.6.2.4]

A.26.17.1.5 More than one control station could be required in a compartment (lock) depending on its size. [**99:** A.14.2.5.2.4]

26.17.1.6 Controls shall be designed to prevent unintended activation. [**99:**14.2.6.2.4.1]

26.17.1.7 Water shall be delivered from the fixed discharge nozzles as specified in 26.17.1.9 within 3 seconds of activation of any affiliated deluge control. [**99:**14.2.6.2.5]

26.17.1.8* Average spray density at floor level shall be not less than 2 gpm/ft^2 (82 mm/min), with no floor area larger than 10.76 ft^2 (1 m^2) receiving less than 1 gpm/ft^2 (40.75 L/min/m^2). [**99:**14.2.6.2.6]

A.26.17.1.8 Experience has shown that, when water is discharged through conventional sprinkler heads into a hyperbaric atmosphere, the spray angle is reduced because of increased resistance to water droplet movement in the denser atmosphere. This is so, even though the water pressure differential is maintained above chamber pressure. Therefore, it is necessary to compensate by increasing the number of sprinkler heads. It is recommended that spray coverage tests be conducted at maximum chamber pressure. [**99:** A.14.2.6.2.6]

Some chamber configurations, such as small-diameter horizontal cylinders, could have a very tiny floor, or even no floor at all. For horizontal cylinder chambers and spherical chambers, the term *floor level* should be taken to mean the level at ¼ diameter below the chamber centerline or actual floor level, whichever yields the larger floor area. [**99:**A.14.2.6.2.6]

26.17.1.9 Water shall be available in the deluge system to maintain the flow specified in 26.17.1.8 simultaneously in each chamber compartment (lock) containing the deluge system for 1 minute. [**99:**14.2.6.2.7]

26.17.1.10 The limit on maximum extinguishment duration shall be governed by the chamber capacity (bilge capacity also, if so equipped) or its drainage system, or both. [**99:**14.2.6.2.7.1]

26.17.1.11 The deluge system shall have stored pressure to operate for at least 15 seconds without electrical branch power. [**99:**14.2.6.2.8]

26.17.2 Installation Requirements. (Reserved)

26.18 Fixed Guideway Transit and Passenger Rail Systems.

NFPA 130, *Standard for Fixed Guideway Transit and Passenger Rail Systems,* provides requirements for fire protection of underground, surface, and elevated fixed guideway transit and passenger rail systems, including trainways, vehicles, and life safety from fire in fixed guideway transit and passenger rail system stations, trainways, and vehicles. Fixed guideway transit and passenger rail stations are stations that accommodate only passengers and employees of the fixed guideway transit and passenger rail systems and incidental occupancies in the stations.

26.18.1 Design Requirements.

26.18.1.1 Other fire suppression systems, if approved, shall be permitted to be substituted for automatic sprinkler systems in the areas listed in 26.18.2.1. [**130:**5.4.4.5]

EDUFIRE.IR

26.18.2 Installation Requirements.

26.18.2.1 An automatic sprinkler protection system shall be provided in areas of stations used for concessions, in storage areas, in trash rooms, and other similar areas with combustible loadings, except trainways. [**130:**5.4.4.1]

26.18.2.2 Sprinkler protection shall be permitted to be omitted in areas of open stations remotely located from public spaces. [**130:**5.4.4.2]

26.18.2.3 Installation of sprinkler systems shall comply with this standard or applicable local codes as required. [**130:**5.4.4.3]

26.18.2.4 A sprinkler system waterflow alarm and supervisory signal service shall be installed. [**130:**5.4.4.4]

26.19 Motion Picture and Television Production Studio Soundstages, Approved Production Facilities, and Production Locations.

26.19.1 Design Requirements. (Reserved)

26.19.2 Installation Requirements.

26.19.2.1 The requirements of this standard prohibiting obstructions to sprinkler discharge shall not be applicable if approved mitigation is employed. [**140:**4.11.1.3.1]

26.19.2.2 The requirements of this standard prohibiting obstructions to sprinkler discharge shall not be applicable if the building sprinkler system meets the design criteria for Extra Hazard, Group 2. [**140:**4.11.1.3.2]

26.19.2.3 In any production location building protected by an existing automatic sprinkler system, where solid- or hard-ceiling sets or platforms are introduced and create an obstruction to sprinkler discharge, the provisions of 26.19.2.4 or 26.19.2.5 shall be met. [**140:**5.11.3]

26.19.2.4* The requirements of this standard prohibiting obstructions to sprinkler discharge shall not be applicable if approved mitigation is employed. [**140:**5.11.4]

A.26.19.2.4 Paragraphs 4.11.1.3.1 and 4.11.1.3.2 of NFPA 140 recognize motion picture and television industry practices that require sets to change constantly and that sets are "temporary" construction not subject to building codes or standards. Solid ceilings that obstruct the stage sprinklers are "flown" (moved) in or out to permit special shooting angles or lighting requirements, often on a scene-by-scene basis. With temporary walls and ceilings, it would be impractical to install a sprinkler system in a constantly changing structure. Therefore, one or more of the following mitigation techniques should be used to compensate for the areas shielded from sprinkler spray by solid or hard ceilings or platforms:

(1) Approved and listed heat detectors or smoke detectors can be installed beneath such solid or hard ceilings in excess of 600 ft^2 (56 m^2) in area and platforms in excess of 600 ft^2 (56 m^2) in area and 3 ft (0.9 m) in height. Detectors should be connected to an approved and listed central, proprietary, or remote station service or to a local alarm that will provide an audible signal (i.e., a bell or horn) at a constantly attended location. The detector system, including the alarm panel, is defined as a portable system because it is intended to be reinstalled when platforms or sets are changed. The detectors that are secured to standard outlet boxes and the listed fire alarm panels can be temporarily supported by sets, platforms, or pedestals. Spacing of detectors should be per manufacturers' requirements.

EDUFIRE.IR

(2) The ceiling can be positioned to allow for the operation of the building's automatic fire sprinkler system after videotaping, filming, or broadcasting of programs has been completed for the day.
(3) A fire watch should be provided when the set is not in use.
(4) No combustible materials should be stored under any platforms. Consideration should be given to secure such covered areas with screen wire or other materials that will permit visual inspection and emergency access.
(5) Approved/listed fire retardants can be applied beneath combustible platforms.
(6) Approved/listed fire retardants can be applied to scenery, props, framework and deck of combustible platforms, and the hard ceilings of combustible sets.

[**140:** A.4.11.1.3.1]

26.19.2.5* The requirements of this standard prohibiting obstructions to sprinkler discharge shall not be applicable if the building sprinkler system meets the design criteria for Extra Hazard, Group 2. [**140:**5.11.5]

A.26.19.2.5 See A.26.19.2.4.

26.20 Animal Housing Facilities.

26.20.1 Design Requirements. (Reserved)

26.20.1.1 (Reserved)

26.20.2 Installation Requirements. (Reserved)

26.20.2.1 Quick-response sprinklers shall be utilized in animal housing facilities. [**150:**9.2.3]

26.21 Water Cooling Towers.

26.21.1 Design Requirements.

26.21.1.1 Types of Systems.

26.21.1.1.1* The following fire protection systems shall be permitted to be used in counterflow cooling towers:

(1) Wet pipe sprinkler system
(2) Dry pipe sprinkler system
(3) Preaction sprinkler system
(4) Deluge sprinkler system

[**214:**5.2.2.1]

A.26.21.1.1.1 Counterflow design configurations lend themselves to use of open- or closed-orifice fire protection systems. A deluge system provides a higher degree of protection where water supplies are adequate. In climates that are subject to freezing temperatures, a dry pipe, preaction, or deluge system minimizes the possibility of failure due to pipes freezing. [**214:** A.5.2.2.1]

26.21.1.1.2* A deluge sprinkler system shall be used in crossflow towers. [**214:**5.2.2.2]

A.26.21.1.1.2 The crossflow design is such that it is difficult to locate sprinklers in the most desirable spots for both water distribution and heat detection. This situation is best addressed by using a deluge system. [**214:** A.5.2.2.2]

EDUFIRE.IR

26.21.1.2 Minimum Rate of Application. [**214:**5.2.3]

26.21.1.2.1 Under the fan decks of counterflow towers, the rate of application of water shall be 0.5 gpm/ft^2 (20.4 mm/min), including fan opening. [**214:**5.2.3.1]

26.21.1.2.2 Under the fan decks of crossflow towers, the rate of application of water shall be 0.33 gpm/ft^2 (13.4 mm/min), including fan opening. [**214:**5.2.3.2]

26.21.1.2.3 Over the fill areas of crossflow towers, the rate of application of water shall be 0.5 gpm/ft^2 (20.4 mm/min). [**214:**5.2.3.3]

26.21.1.3 Extended Fan Decks. On towers having extended fan decks that completely enclose the distribution basin, the discharge outlets protecting the fill area shall be located over the basin, under the extension of the fan deck. [**214:**5.2.4.3]

26.21.1.3.1 These discharge outlets shall be open directional spray nozzles or other approved spray devices arranged to discharge 0.35 gpm/ft^2 (14.3 mm/min) directly on the distribution basin and 0.15 gpm/ft^2 (6.11 mm/min) on the underside of the fan deck extension. [**214:**5.2.4.3.1]

26.21.1.3.2 On towers having extended fan decks that do not completely enclose the hot-water basin, outlets protecting the fill shall be located under the distribution basin in accordance with 5.2.4.2.2 of NFPA 214. [**214:**5.2.4.3.2]

26.21.1.4 Combustible Fan Decks. For deluge systems using directional spray nozzles in the pendant position, provisions shall be made to protect the underside of a combustible fan deck at a minimum of 0.15 gpm/ft^2 (6.1 mm/min), which shall be included as part of the application rate specified in 5.2.3 of NFPA 214. [**214:**5.2.4.4]

26.21.1.5* Water Basin Covers. On film-filled towers that have solid, hot-water basin covers over the complete basin, the discharge outlets protecting the fill area shall be permitted to be located under the basin covers. [**214:**5.2.4.5]

A.26.21.1.5 See Figure A.26.21.2.4.

26.21.1.5.1 These discharge outlets shall be open directional spray nozzles or other approved devices arranged to discharge 0.50 gpm/ft^2 (20.4 mm/min) into the distribution basin horizontally, with some of the spray splashing up and on the underside of the water basin covers. [**214:**5.2.4.5.1]

26.21.1.6 Exposure Protection. [**214:**5.2.10]

26.21.1.6.1 Where any combustible exterior surfaces of a tower, including the fan deck and distribution basins, are less than 100 ft (30 m) from significant concentrations of combustibles such as structures or piled material, the combustible exposed surfaces of the tower shall be protected by an automatic water spray system. [**214:**5.2.10.1]

26.21.1.6.2 Systems for exterior protection shall be designed with the same attention and care as interior systems. [**214:**5.2.10.2]

26.21.1.6.2.1 Pipe sizing shall be based on hydraulic calculations. [**214:**5.2.10.2.1]

26.21.1.6.2.2 Water supply and discharge rate shall be based on a minimum 0.15 gpm/ft^2 (6.1 mm/min) for all protected surfaces. [**214:**5.2.10.2.2]

26.21.1.7 Sprinkler System Water Supply.

26.21.1.7.1 Deluge Systems.

26.21.1.7.1.1* Where all cells of a cooling tower are protected by a single deluge system, the water supply shall be adequate to supply all discharge outlets on that system. [**214:**5.6.1.1]

EDUFIRE.IR

A.26.21.1.7.1.1 Where a single deluge system protects an entire water-cooling tower, regardless of the number of cells, the water supply needs to be based on the entire deluge system coverage. *(See Figure A.26.21.1.7.1.1.)* [**214:** A.5.6.1.1]

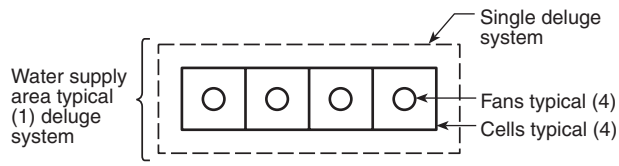

FIGURE A.26.21.1.7.1.1 *Single Deluge System. [214:Figure A.5.6.1.1]*

26.21.1.7.1.2 Where two or more deluge systems are used to protect a cooling tower and fire-resistant partitions are not provided between the deluge systems, the water supply shall be adequate to supply all discharge outlets in the two most hydraulically demanding adjacent systems. [**214:**5.6.1.2]

26.21.1.7.1.3* Where two or more deluge systems are separated by fire-resistant partitions, the water supply shall be adequate to supply all discharge outlets in the single most hydraulically demanding system. [**214:**5.6.1.3]

A.26.21.1.7.1.3 Deluge systems separated by fire-resistant partitions can be treated independently as worst-case water supply situations. *(See Figure A.26.21.1.7.1.3.)* [**214:** A.5.6.1.3]

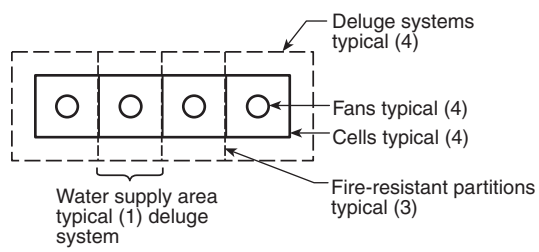

FIGURE A.26.21.1.7.1.3 *Multiple Deluge Systems. [214:Figure A.5.6.1.3]*

26.21.1.7.2 Wet, Dry, and Preaction Systems.

26.21.1.7.2.1* Where each cell of the cooling tower is separated by a fire-resistant partition, the water supply shall be adequate to supply all discharge outlets in the hydraulically most demanding single cell. [**214:**5.6.2.1]

A.26.21.1.7.2.1 Water-cooling towers with each cell separated by a fire-resistant partition and protected by wet, dry, or preaction system(s) should have the water supply based on the most demanding individual cell. *(See Figure A.26.21.1.7.2.1.)* [**214:** A.5.6.2.1]

26.21.1.7.2.2* Where fire-resistant partitions are not provided between each cell of a cooling tower, the water supply shall be adequate to supply all discharge outlets in the two most hydraulically demanding adjoining cells. [**214:**5.6.2.2]

A.26.21.1.7.2.2 Without fire-resistant partitions between cells, the worst-case situation involves the most demanding adjoining cells. *(See Figure A.26.21.1.7.2.2.)* [**214:** A.5.6.2.2]

EDUFIRE.IR

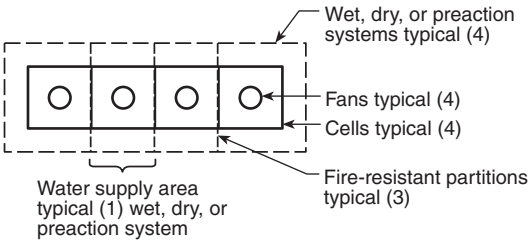

FIGURE A.26.21.1.7.2.1 Multiple Wet, Dry, or Preaction Systems with Fire-Resistant Partitions. [214:Figure A.5.6.2.1]

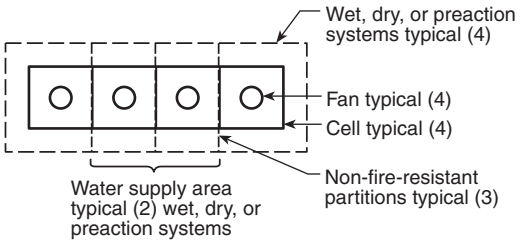

FIGURE A.26.21.1.7.2.2 Multiple Wet, Dry, or Preaction Systems with No Fire-Resistant Partitions. [214:Figure A.5.6.2.2]

26.21.1.7.3 Hose Streams. Water supplies shall be sufficient to include a minimum of 500 gpm (1900 lpm) for hose streams in addition to the sprinkler requirements. [**214:**5.6.3]

26.21.1.7.4 Duration. A water supply adequate for at least a 2-hour duration shall be provided for the combination of the water supply specified in 5.6.1 or 5.6.2 of NFPA 214, plus the hose stream demand specified in 26.21.1.7.3. [**214:**5.6.4]

26.21.2 Installation Requirements.

26.21.2.1* Counterflow Towers. [**214:**5.2.4.1]

A.26.21.2.1 See Figure A.26.21.2.1(a) through Figure A.26.21.2.1(d).

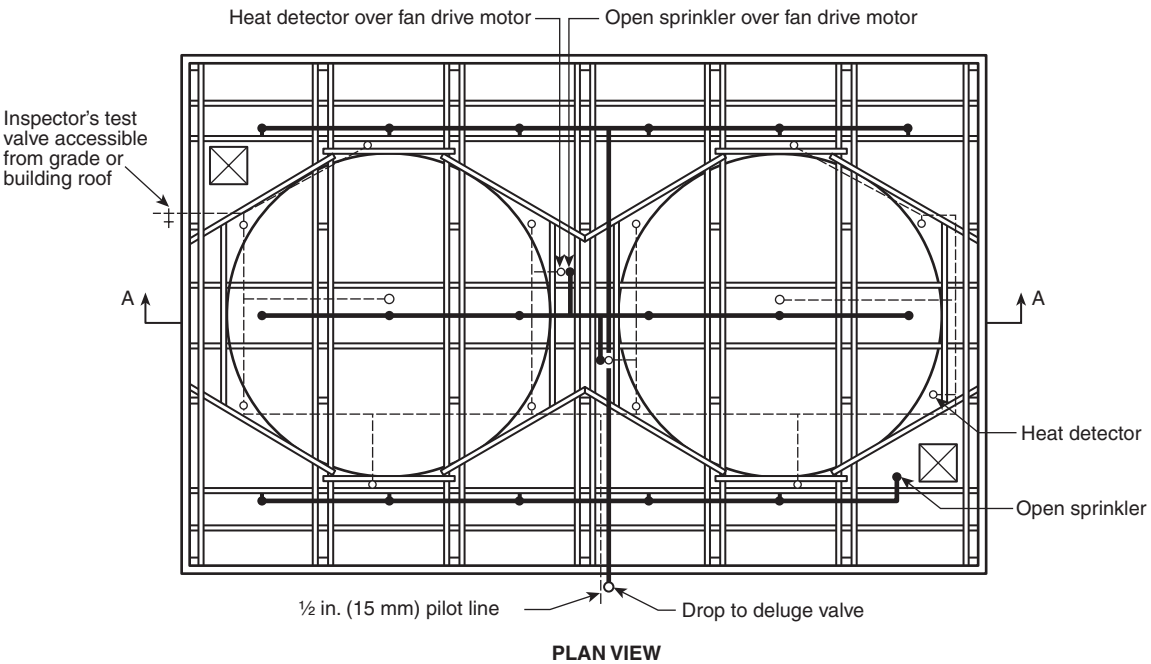

FIGURE A.26.21.2.1(a) Plan View, Typical Deluge Fire Protection Arrangement for Counterflow Towers. [214:Figure A.5.2.4.1(a)]

EDUFIRE.IR

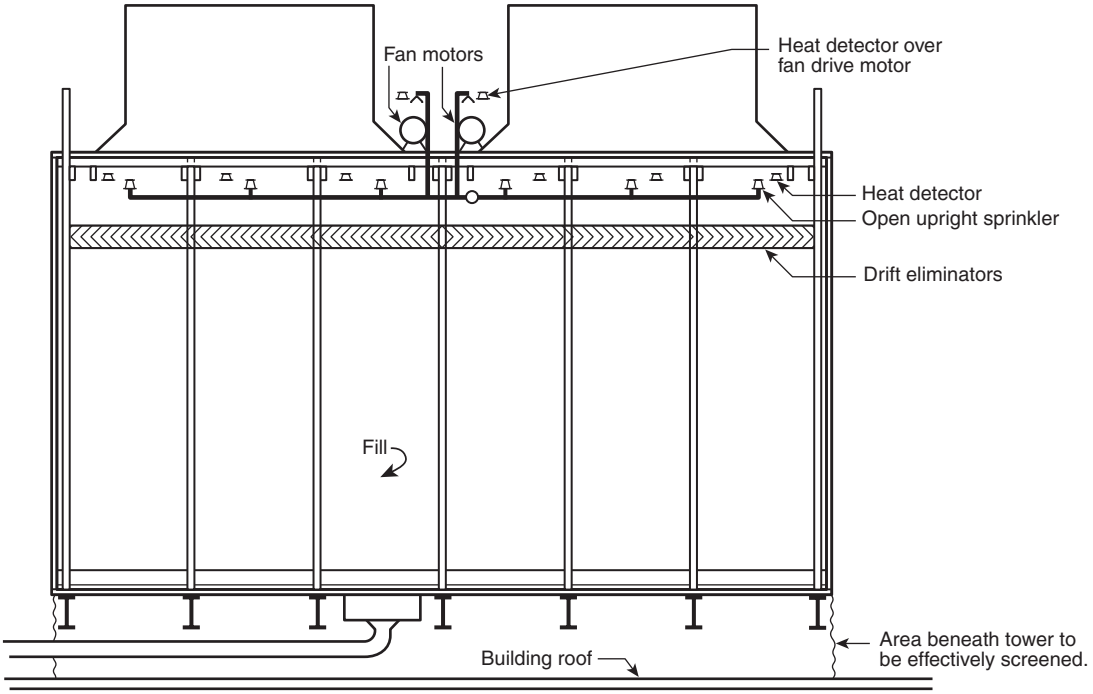

FIGURE A.26.21.2.1(b) *Section View, Typical Deluge Fire Protection Arrangement for Counterflow Towers. [214:Figure A.5.2.4.1(b)]*

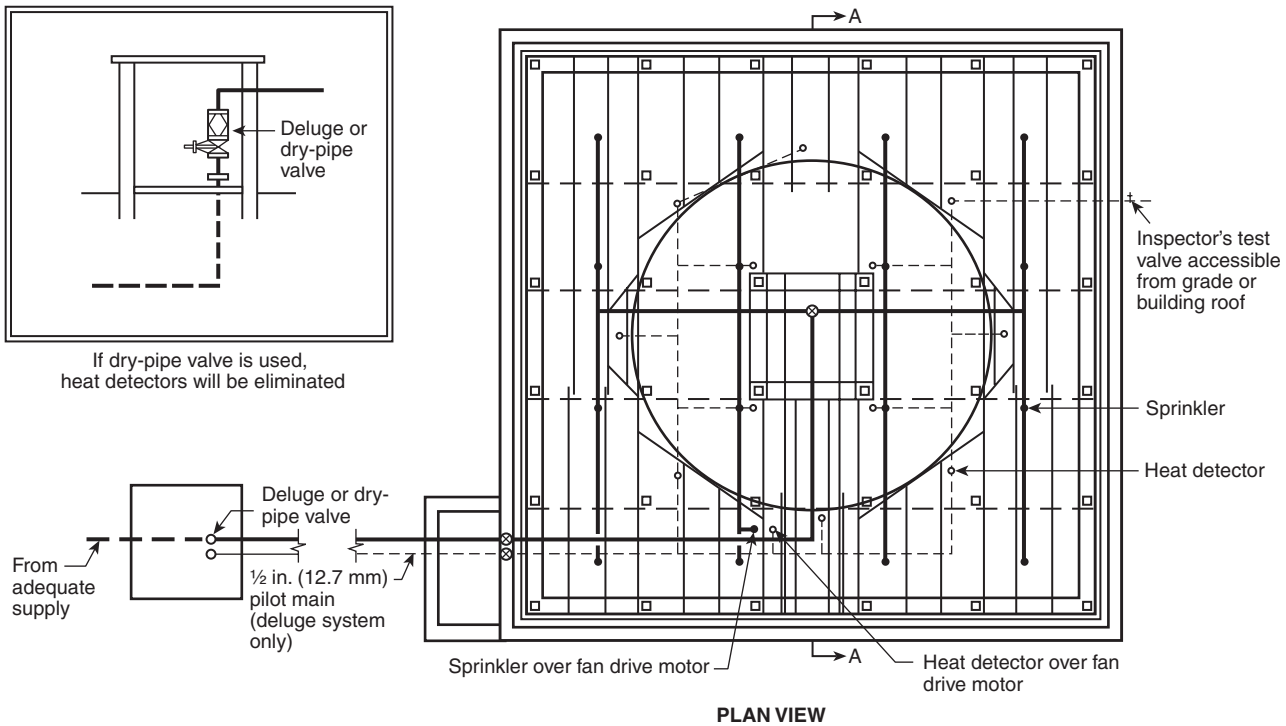

FIGURE A.26.21.2.1(c) *Plan View, Typical Deluge or Dry Pipe Fire Protection Arrangement for Counterflow Towers. [214:Figure A.5.2.4.1(c)]*

EDUFIRE.IR

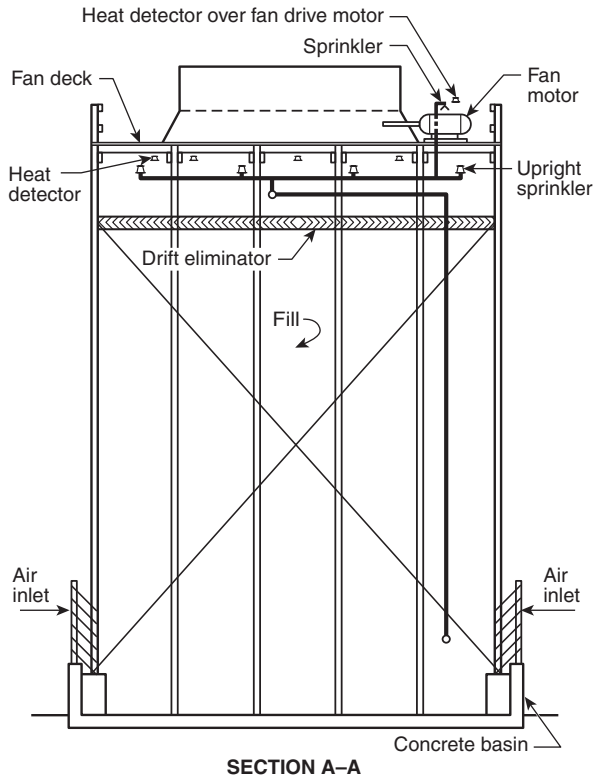

FIGURE A.26.21.2.1(d) *Section View, Typical Deluge or Dry Pipe Fire Protection Arrangement for Counterflow Towers. [214:Figure A.5.2.4.1(d)]*

26.21.2.1.1 The discharge outlets shall be located under the fan deck and fan opening. [**214:**5.2.4.1.1]

26.21.2.1.2 Except under the fan opening, all discharge outlets shall have deflector distances installed in accordance with Section 9.5 of this standard. [**214:**5.2.4.1.2]

26.21.2.1.3 Closed-head discharge outlets for dry-pipe and preaction systems shall be installed in the upright position only. [**214:**5.2.4.1.3]

26.21.2.2* Crossflow Towers. [**214:**5.2.4.2]

A.26.21.2.2 See Figure A.26.21.2.2(a) through Figure A.26.21.2.2(d).

26.21.2.2.1 The discharge outlets protecting the plenum area shall be located under the fan deck and in the fan opening. [**214:**5.2.4.2.1]

26.21.2.2.2 Discharge outlets protecting the fill shall be located under the distribution basin on either the louver or drift eliminator side, discharging horizontally through the joist channels. [**214:**5.2.4.2.2]

26.21.2.2.3 Towers with an air travel dimension longer than the maximum allowable for the discharge device being used shall have discharge devices placed on both sides of the fill area in each joist channel. [**214:**5.2.4.2.3.1]

26.21.2.2.4 The pressure at each discharge device shall be adequate to provide protection for half of the length of the fill measured along the air travel. [**214:**5.2.4.2.3.2]

EDUFIRE.IR

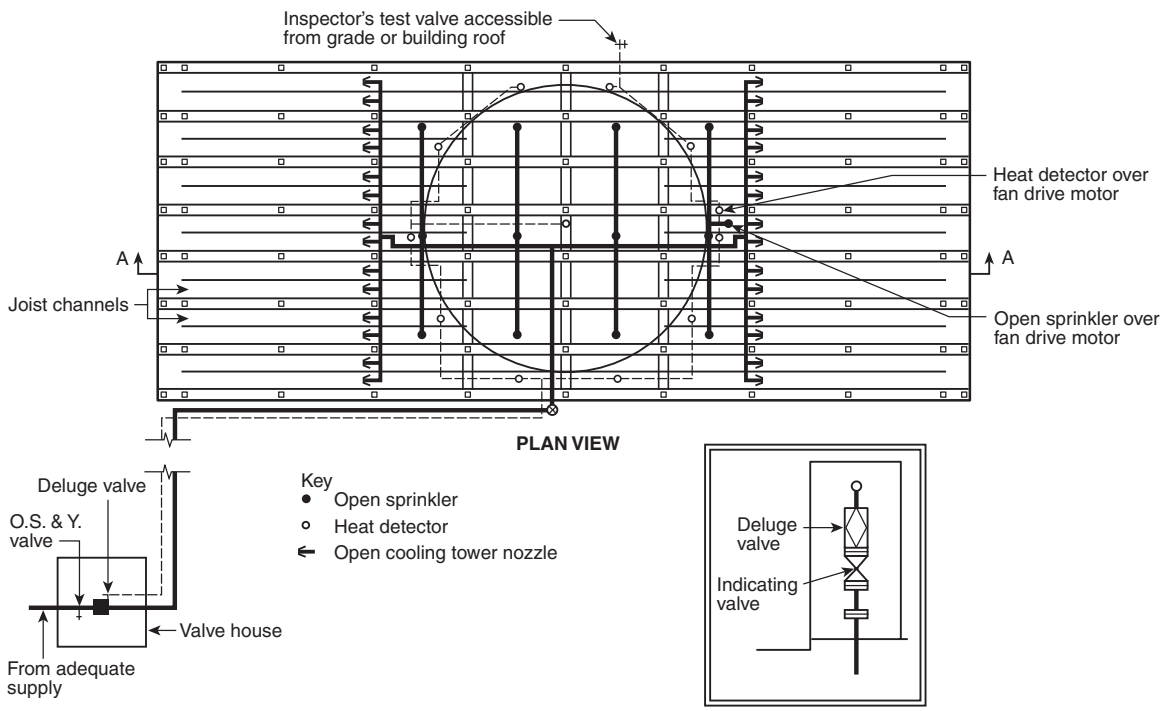

FIGURE A.26.21.2.2(a) *Plan View, Typical Deluge Fire Protection Arrangement for Crossflow Towers. [214:Figure A.5.2.4.2(a)]*

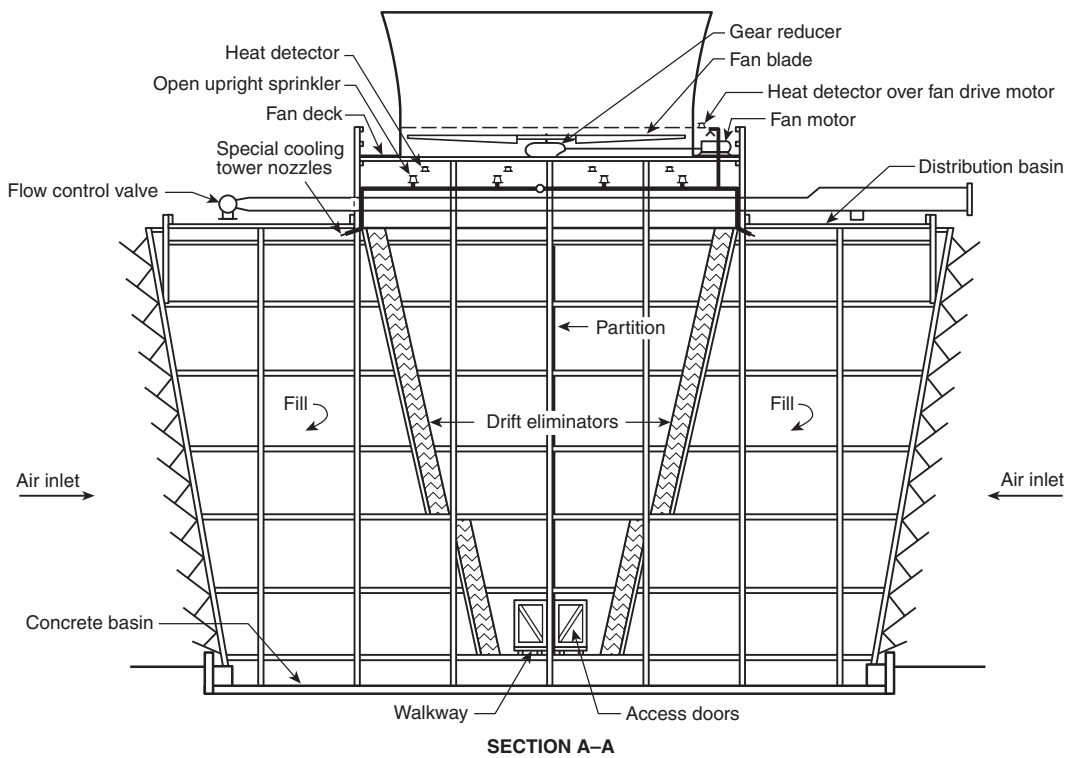

FIGURE A.26.21.2.2(b) *Section View, Typical Deluge Fire Protection Arrangement for Crossflow Towers. [214:Figure A.5.2.4.2(b)]*

EDUFIRE.IR

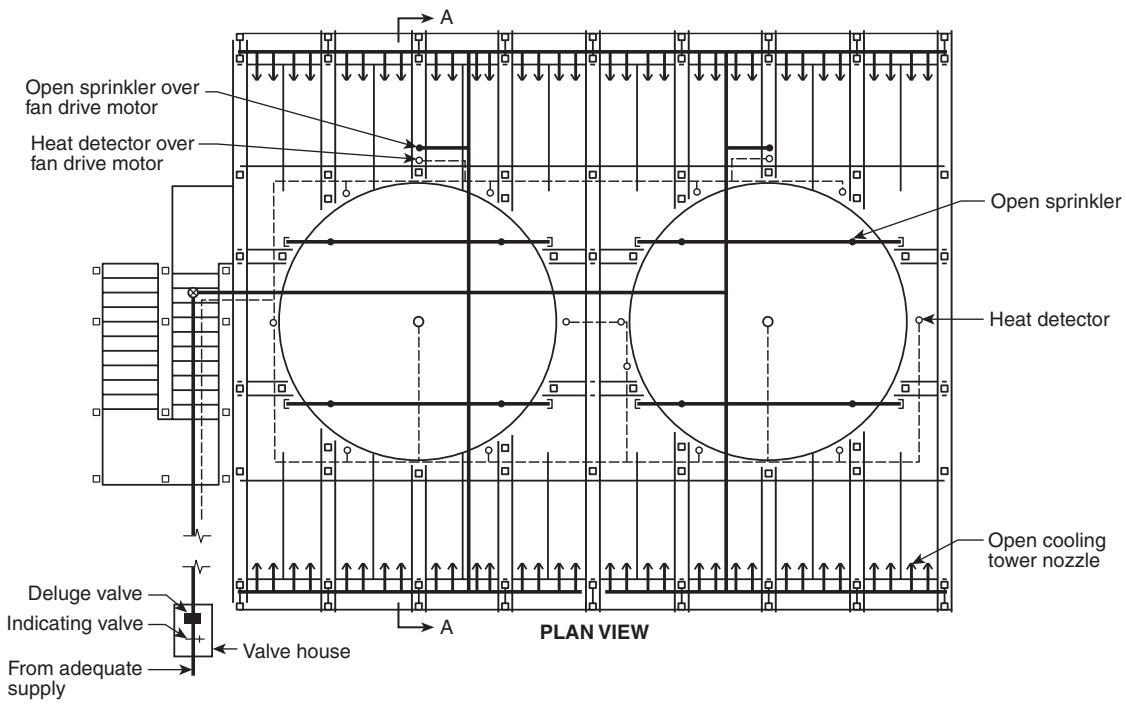

Note: Where air seal boards prevent installation of cooling tower nozzles on drift eliminator side of fill, this nozzle location should be used.

FIGURE A.26.21.2.2(c) *Plan View, Typical Deluge Fire Protection Arrangement for Multicell Crossflow Towers. [214:Figure A.5.2.4.2(c)]*

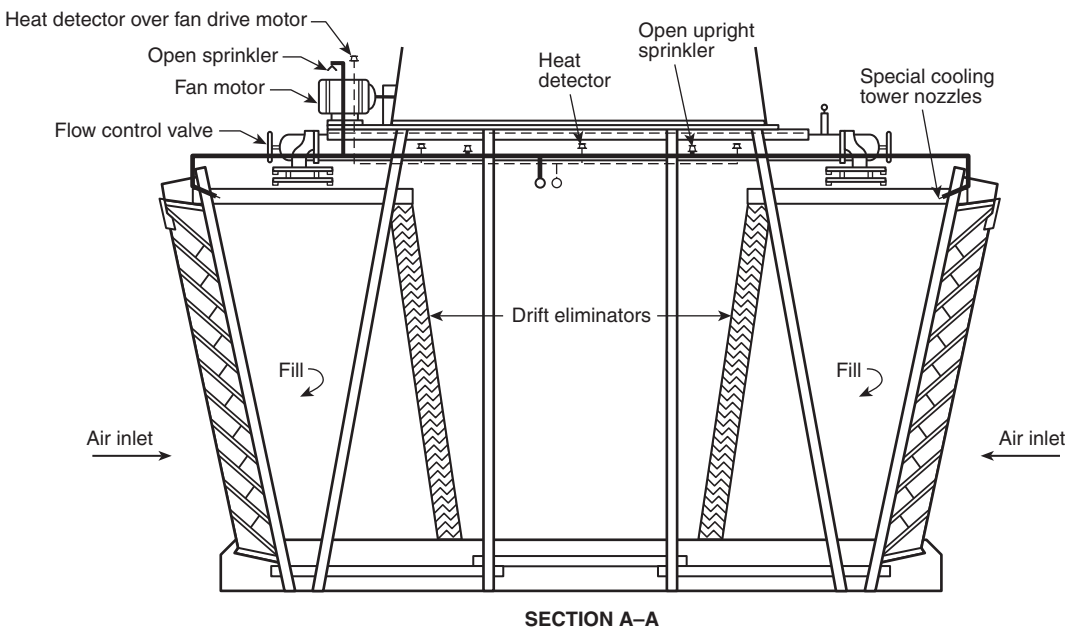

Note: Where air seal boards prevent installation of cooling tower nozzles on drift eliminator side of fill, this nozzle location should be used.

FIGURE A.26.21.2.2(d) *Section View, Typical Deluge Fire Protection Arrangement for Multicell Crossflow Towers. [214:Figure A.5.2.4.2(d)]*

EDUFIRE.IR

26.21.2.2.5 Where joist channels are wider than 2 ft (0.6 m), more than one discharge device shall be required per joist channel. [**214:**5.2.4.2.4.1]

26.21.2.2.6 If the discharge device being used is listed for the width of the joist channel being protected, one discharge device per joist channel shall be permitted to be used. [**214:**5.2.4.2.4.2]

26.21.2.3* Extended Fan Decks. On towers having extended fan decks that completely enclose the distribution basin, the discharge outlets protecting the fill area shall be located over the basin, under the extension of the fan deck. [**214:**5.2.4.3]

A.26.21.2.3 Location of the nozzle relative to surfaces to be protected should be determined by the particular nozzle's discharge characteristics. Care should also be taken in the selection of nozzles to obtain waterways not easily obstructed by debris, sediment, sand, and so forth, in the water. *[See Figure A.26.21.2.3(a) and Figure A.26.21.2.3(b).]* [**214:** A.5.2.4.3]

26.21.2.4* Water Basin Covers. On film-filled towers that have solid, hot-water basin covers over the complete basin, the discharge outlets protecting the fill area shall be permitted to be located under the basin covers. [**214:**5.2.4.5]

A.26.21.2.4 See Figure A.26.21.2.4.

26.21.2.5 Valves. [**214:**5.2.6]

26.21.2.5.1 Shutoff valves and automatically operated water control valves, if provided, shall be located as follows:

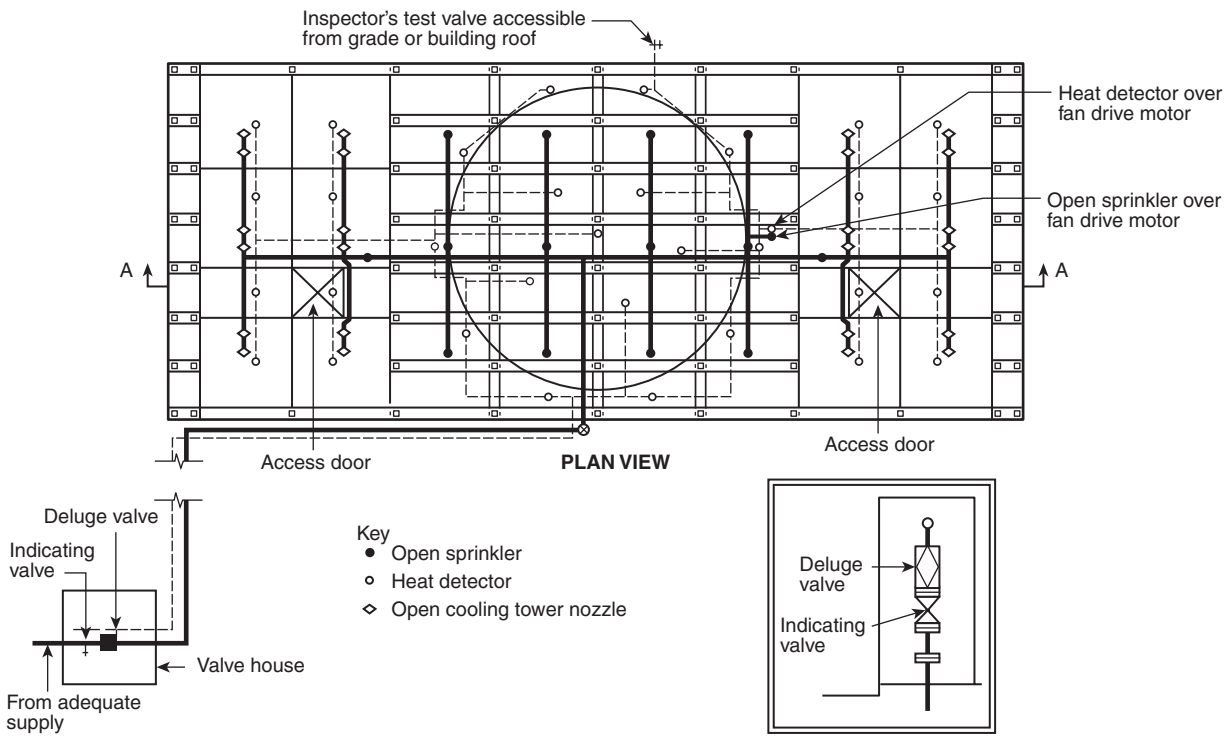

FIGURE A.26.21.2.3(a) *Plan View, Typical Deluge Fire Protection Arrangement for Crossflow Towers with Completely Enclosed Distribution Basins. [214:Figure A.5.2.4.3(a)]*

EDUFIRE.IR

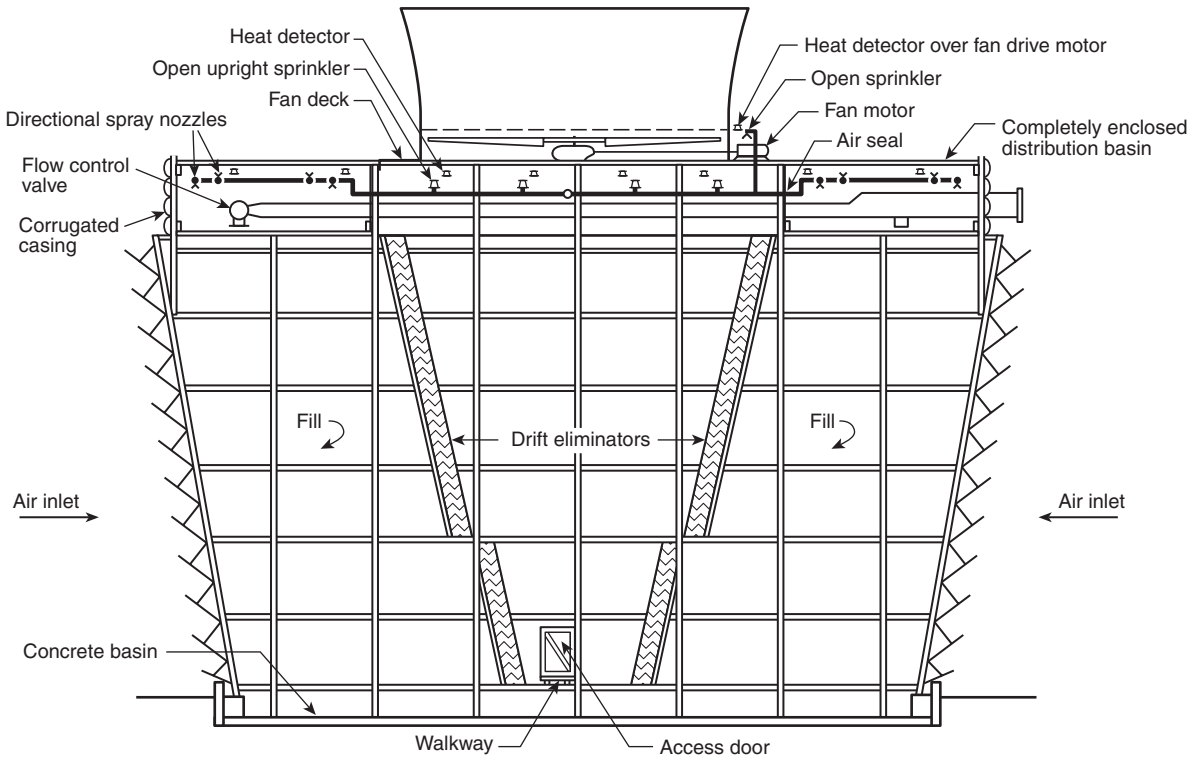

SECTION A–A

FIGURE A.26.21.2.3(b) *Section View, Typical Deluge Fire Protection Arrangement for Crossflow Towers with Completely Enclosed Distribution Basins. [214:Figure A.5.2.4.3(b)]*

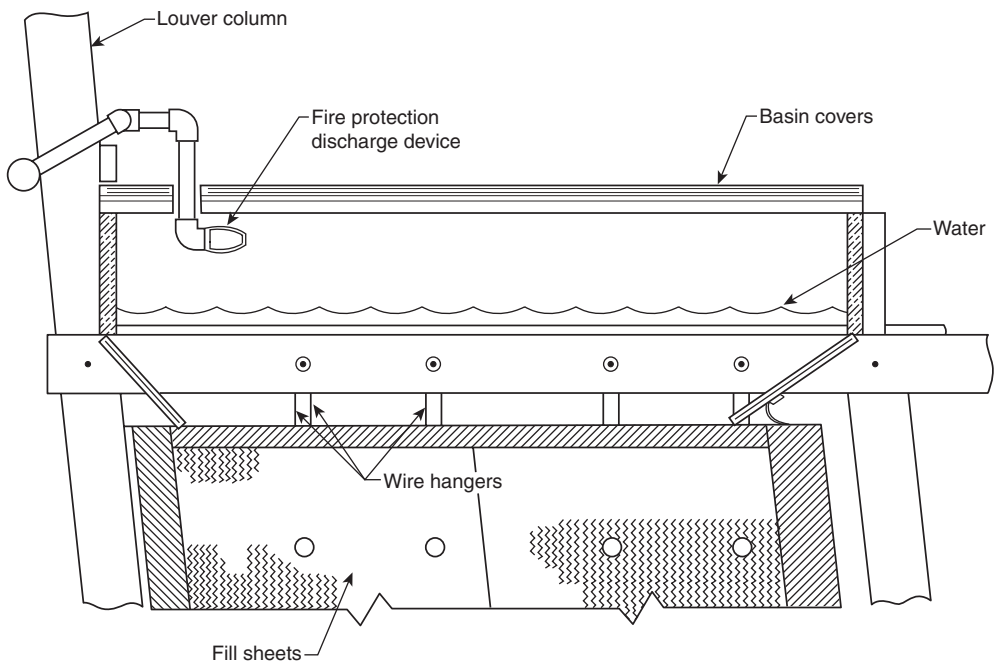

FIGURE A.26.21.2.4 *Typical Deluge Fire Protection Arrangement for Crossflow Towers with Covers Completely Enclosing Distribution Basins. [214:Figure A.5.2.4.5]*

EDUFIRE.IR

(1) Outside the fire-exposed area
(2) As close to the cooling tower as possible to minimize the amount of pipe to the discharge device
(3) Where they will be accessible during a fire emergency

[**214:**5.2.6.1.2]

26.21.2.5.2 Manual Release Valve. [**214:**5.2.6.2]

26.21.2.5.2.1 Remote manual release valves, where required, shall be conspicuously located and accessible during a fire emergency. [**214:**5.2.6.2.1]

26.21.2.5.2.2 Where remote manual release valves are not required, an inspector's test valve shall be provided for each pilot-head-operated system. [**214:**5.2.6.2.2]

26.21.2.6 Strainers. Strainers shall be required for systems utilizing discharge devices with waterways of less than ⅜ in. (9.5 mm) diameter. [**214:**5.2.7]

26.21.2.7 Heat Detectors. Where deluge or preaction systems are used, heat detectors shall be installed and shall be selected from either of the types in 5.2.8.1 or 5.2.8.2 of NFPA 214. [**214:**5.2.8]

26.21.2.7.1 In mechanical-draft towers, pilot line detectors shall be located under the fan deck at the circumference of the fan opening and under the fan opening where necessary to comply with the spacing requirements in 26.21.2.7.1.1. *(For extended fan decks, see 5.2.8.2.3 in NFPA 214.)* [**214:**5.2.8.1.2.1(A)]

26.21.2.7.1.1 Pilot line detectors shall be spaced not more than 8 ft (2.4 m) apart in any direction including the fan opening. Temperature ratings shall be selected in accordance with operating conditions, but shall be no less than intermediate. [**214:**5.2.8.1.2.1(B)]

26.21.2.7.2 On towers having extended fan decks that completely enclose the distribution basin, electrical heat detectors shall be located under the fan deck extension in accordance with standard, indoor-spacing rules for the type detectors used in accordance with *NFPA 72*. [**214:**5.2.8.2.3]

26.21.2.7.2.1 Where the fan deck extension is 16 ft (4.9 m) or less and this dimension is the length of the joist channel, then only one row of detectors centered on and at right angles to the joist channels shall be required. Spacing between detectors shall be in accordance with *NFPA 72*. [**214:**5.2.8.2.3.1]

26.21.2.7.2.2 On towers having extended fan decks that do not completely enclose the hot-water basin, electrical heat detectors shall not be required under the fan deck extension. [**214:**5.2.8.2.3.2]

26.21.2.7.3 Where electrical heat detectors are inaccessible during tower operation, an accessible test detector shall be provided for each detection zone. [**214:**5.2.8.3]

26.21.2.7.4 Electrical heat detector components exposed to corrosive vapors or liquids shall be protected by materials of construction or by protective coatings applied by the equipment manufacturer. [**214:**5.2.8.4]

26.21.2.8 Protection for Fan Drive Motor. [**214:**5.2.9]

26.21.2.8.1 A sprinkler or spray nozzle shall be provided over each fan drive motor where the motor is located so that it is not within the protected area of the tower. [**214:**5.2.9.1]

26.21.2.8.2 Where a preaction or deluge system is used, the detection system shall be extended to cover the motor. [**214:**5.2.9.2]

EDUFIRE.IR

26.21.2.8.3 Provision shall be made to interlock the fan motors with the fire protection system so that the cooling tower fan motors are stopped in the cell(s) for which the system is actuated. [**214:**5.2.9.3]

26.21.2.8.4 Where the continued operation of the fans is vital to the process, a manual override switch shall be permitted to be provided to reactivate the fan when it is determined that there is no fire. [**214:**5.2.9.4]

26.21.2.9 Corrosion Protection. [**214:**5.3]

26.21.2.9.1 Piping, fittings, hangers, braces, and attachment hardware including fasteners shall be hot-dipped galvanized steel in accordance with ASTM A153A/153M, *Standard Specification for Zinc Coating (Hot Dip) on Iron and Steel Hardware,* or other materials having a superior corrosion resistance. [**214:**5.3.1]

26.21.2.9.1.1 Exposed pipe threads and bolts on fittings shall be protected against corrosion. [**214:**5.3.1.1]

26.21.2.9.1.2 All other components shall be corrosion resistant or protected against corrosion by a coating. [**214:**5.3.1.2]

26.21.2.9.2* Wax-type coatings shall not be used on devices without fusible elements. [**214:**5.3.2]

A.26.21.2.9.2 Approved discharge devices are made of nonferrous material and are corrosion-resistant to normal atmospheres. Some atmospheres require special coatings on the discharge devices. [**214:** A.5.3.2]

26.21.2.9.3* Special care shall be taken in the handling and installation of wax-coated or similar sprinklers to avoid damaging the coating. [**214:**5.3.3]

A.26.21.2.9.3 Corrosion attacks the exposed metal and, in time, creeps under the wax coating. [**214:** A.5.3.3]

26.21.2.9.3.1 Corrosion-resistant coatings shall not be applied to the sprinklers by anyone other than the manufacturer of the sprinklers. [**214:**5.3.3.1]

26.21.2.9.3.2 In all cases, any damage to the protective coating occurring at the time of installation shall be repaired at once using only the coating of the manufacturer of the sprinkler in an approved manner, so that no part of the sprinkler will be exposed after the installation has been completed. [**214:**5.3.3.2]

26.22 Standard for the Construction and Fire Protection of Marine Terminals, Piers, and Wharves.

26.22.1 Design Requirements.

26.22.1.1* Unless the requirements of 26.22.1.2 apply, automatic sprinkler systems shall be designed based upon the design criteria for the protection of Group A plastics. [**307:**5.4.2.1]

A.26.22.1.1 Group A plastics represent the most challenging commodities that can be protected by a sprinkler system designed in accordance with this standard. Due to the widely varying nature of commodities that pass through transit sheds, container freight stations, transload facilities, and similar buildings used for handling and temporary storage of general cargo, a minimum automatic sprinkler design based upon the protection of Group A

EDUFIRE.IR

plastic commodity under the provisions of this standard provides an appropriate level of fire protection. [**307:** A.5.4.2.1]

26.22.1.2 With the approval of the authority having jurisdiction, the requirements of 26.22.1.1 shall not apply to buildings used exclusively for the handling or storage of specific cargoes and commodities that are defined as commodity classes less than Group A plastics by this standard. [**307:**5.4.2.2]

26.22.1.3 Buildings consistent with 26.22.1.2 shall be protected in accordance with the design criteria for the applicable commodity as required by this standard. [**307:**5.4.2.3]

26.22.1.4 Buildings used for the storage of hazardous materials shall be protected in accordance with this standard and the applicable codes and standards for the type of hazardous material being stored. [**307:**5.4.2.4]

26.22.2 Installation Requirements.

26.22.2.1 Piers and Wharves with Combustible Substructure.

26.22.2.1.1 Where there is danger of damage to sprinkler equipment by floating objects, physical barriers shall be provided to exclude such objects. [**307:**4.3.3.1.2.2]

26.22.2.1.2* Upward Projecting Sprinklers. Where narrow horizontal channels or spaces are caused by caps, stringers, ties, and other structural members and where the standard upright sprinkler does not project sufficient water upward to extinguish or control fires on the underside of the pier or wharf deck, a sprinkler that projects water upward to wet the overhead shall be used. [**307:**4.3.3.1.3.1]

A.26.22.2.1.2 Examples of sprinklers that project water upward are pendent sprinklers installed in an upright position or old-style sprinklers. [**307:** A.4.3.3.1.3.1]

(A) Location, spacing, and deflector position shall be governed by the discharge pattern of the sprinkler and the structure being protected. [**307:**4.3.3.1.3.1(A)]

(B) The following design and installation guides shall apply where pendent sprinklers in the upright position or old-style sprinklers are to be utilized:

(1) The maximum coverage per sprinkler head shall be limited to 80 ft^2 (7.4 m^2).
(2) Where spacing or arrangement of stringers constitutes typical open-joist construction directly supporting the deck, sprinkler branch lines shall be installed between the bents at right angles to the stringers and shall meet the following requirements:
    (a) Spacing between branch lines shall not exceed 10 ft (3 m).
    (b) Sprinklers on branch lines shall be staggered and spaced not to exceed 8 ft (2.4 m) on center.
(3)* Where crisscross construction is involved, closer spacing of sprinklers shall be permitted as necessary to provide wetting of the entire structure.

A.26.22.2.1.2(B)(3) An example of crisscross construction (ties on stringers) is illustrated in Figure B.1(a) of NFPA 307. [**307:** A.4.3.3.1.3.1(B)(3)]

(4) The deflectors of sprinklers on lines under stringers shall be located not less than 4 in. (100 mm) nor more than 10 in. (250 mm) below the bottom plane of the stringer, and not more than 18 in. (450 mm) below the underside of the pier or wharf deck.
(5)* The sprinkler system shall be hydraulically designed in accordance with the requirements of this standard and shall meet the following requirements:
    (a) Sprinkler orifice shall be ½ in. (13 mm) and shall discharge at a minimum pressure of 12.5 psi (85 kPa).

EDUFIRE.IR

(b) Design area shall be based upon the largest area between firestops plus an additional area embracing at least two branch lines on opposite sides of the firestop.
(c) Minimum design area shall be not less than 5000 ft^2 (465 m^2).

A.26.22.2.1.2(B)(5) The use of firestops for draft control (e.g., to bank heat, facilitate the opening of sprinkler heads, and prevent the overtaxing of the sprinkler system) is particularly important in the design of sprinkler protection for combustible substructures. The fire walls and firestops of 4.3.3.4 and 4.3.3.5 of NFPA 307 should be incorporated into the sprinkler system design for draft control to the maximum extent practical; however, due to limitations in the size of the design area for the sprinkler system, additional firestops normally are needed. These additional or supplemental firestops need only have limited fire resistance, but they should be as deep as possible and be of substantial construction, such as double 3 in. (75 mm) planking, where exposed to the elements. Where not exposed to the possibility of physical damage, ¾ in. (20 mm) treated plywood extending 48 in. (1.2 m) below stringers with solid blocking between stringers should provide adequate durability and reasonable effectiveness. [**307:** A.4.3.3.1.3.1(B)(5)]

(6) The temperature rating of the sprinkler shall not exceed 165°F (74°C).
(7) The maximum area to be protected by any one system shall be limited to 25,000 ft^2 (2320 m^2).

[**307:**4.3.3.1.3.1(B)]

26.23 Semiconductor Fabrication Facilities.

26.23.1 Design Requirements.

26.23.1.1* Automatic sprinklers for cleanrooms or clean zones shall be installed in accordance with this standard and shall be hydraulically designed for a density of 0.20 gpm/ft^2 (8.2 mm/min) over a design area of 3000 ft^2 (280 m^2). [**318:**11.1.4.2]

A.26.23.1.1 Typical configurations of cleanrooms and their chases and plenums create numerous areas that might be sheltered from sprinkler protection. These areas can include air-mixing boxes, catwalks, hoods, protruding lighting, open waffle slabs, equipment, piping, ducting, and cable trays. Care should be taken to relocate or supplement sprinkler protection to ensure that sprinkler discharge covers all parts of the occupancy. Care should also be taken to ensure that sprinklers are located where heat will be satisfactorily collected for reliable operation of the sprinkler. [**318:** A.11.1.4.2]

Gaseous fire suppression systems are not substitutes for automatic sprinkler protection. The large number of air changes in cleanrooms can cause dilution or stratification of the gaseous agent. [**318:** A.11.1.4.2]

It is recommended that sprinkler systems be inspected at least semiannually by a qualified inspection service. (See NFPA 25.) The length of time between such inspections can be decreased due to ambient atmosphere, water supply, or local requirements of the authority having jurisdiction. [**318:** A.11.1.4.2]

Prior to taking a sprinkler system out of service, one should be certain to receive permission from all authorities having jurisdiction and to notify all personnel who might be affected during system shutdown. A fire watch during maintenance periods is a recommended precaution. Any sprinkler system taken out of service for any reason should be returned to service as promptly as possible. [**318:** A.11.1.4.2]

A sprinkler system that has been activated should be thoroughly inspected for damage and its components replaced or repaired promptly. Sprinklers that did not operate but were

EDUFIRE.IR

subjected to corrosive elements of combustion or elevated temperatures should be inspected and replaced if necessary, in accordance with the minimum replacement requirements of the authority having jurisdiction. Such sprinklers should be destroyed to prevent their reuse. [**318:**A.11.1.4.2]

26.23.1.2 Automatic sprinkler protection shall be designed and installed in the plenum and interstitial space above cleanrooms in accordance with this standard, for a density of 0.20 gpm/ft^2 (8.2 mm/min) over a design area of 3000 ft^2 (280 m^2). [**318:**11.1.4.3]

26.23.1.3 Sprinklers installed in duct systems shall be hydraulically designed to provide 0.5 gpm (1.9 L/min) over an area derived by multiplying the distance between the sprinklers in a horizontal duct by the width of the duct. [**318:**11.2.1.2]

26.23.1.3.1* Minimum discharge shall be 20 gpm (75 L/min) per sprinkler from the five hydraulically most remote sprinklers. [**318:**11.2.1.2.1]

A.26.23.1.3.1 Small-orifice sprinklers, ⅜ in. (10 mm) or larger, can be used. [**318:**A.11.2.1.2.1]

26.23.2 Installation Requirements.

26.23.2.1* Wet pipe automatic sprinkler protection shall be provided throughout facilities containing cleanrooms and clean zones. [**318:**11.1.4.1]

A.26.23.2.1 Automatic sprinkler systems and their water supplies should be designed for maximum reliability. In the event of any impairments of the yard main system, sprinkler system lead-in(s) connections should be capable of being isolated and protection promptly restored through valving or interconnection of automatic sprinkler systems, or both, inside the building. [**318:**A.11.1.4.1]

26.23.2.2* Approved quick-response sprinklers shall be utilized for sprinkler installations within down-flow airstreams in cleanrooms and clean zones. [**318:**11.1.4.4]

A.26.23.2.2 The use of quick-response sprinklers, while still delayed in opening by the downward airflow, would respond to a smaller-size fire more quickly than would conventional sprinklers. (Glass bulb–type quick-response sprinklers might be preferable to other types of quick-response sprinklers.) [**318:**A.11.1.4.4]

26.23.2.3* Sprinklers shall be spaced a maximum of 20 ft (6.1 m) apart horizontally and 12 ft (3.7 m) apart vertically. [**318:**11.2.1.2.2]

A.26.23.2.3 Small-orifice sprinklers, ⅜ in. (10 mm) or larger, can be used. [**318:**A.11.2.1.2.1]

26.23.2.4 A separate indicating control valve shall be provided for sprinklers installed in ductwork. [**318:**11.2.1.3]

26.23.2.5 The sprinklers shall be accessible for periodic inspection and maintenance. [**318:**11.2.1.6]

26.24 Aircraft Hangars.

26.24.1 Design Requirements. Sprinkler systems installed in aircraft hangars shall comply with NFPA 409.

26.24.2 Installation Requirements. Sprinkler systems installed in aircraft hangars shall comply with NFPA 409.

EDUFIRE.IR

26.25 Airport Terminal Buildings, Fueling Ramp Drainage, and Loading Walkways.

26.25.1 Design Requirements.

26.25.1.1 Passenger-handling areas shall be classified as Ordinary Hazard Group 1 Occupancy, as defined in this standard, for the purpose of sprinkler system design. [**415:**4.5.1.3]

26.25.1.2* Baggage, package, and mail-handling areas shall be classified as Ordinary Hazard Group 2 Occupancy, as defined in this standard, for the purpose of sprinkler system design. [**415:**4.5.1.4]

A.26.25.1.2 The exposure to the airport terminal building from the airport ramp is significant. The number of building sprinklers operating from the exposure fire could be greater than the number of building sprinklers operating from an internal ignition source. [**415:** A.4.5.1.5]

26.25.1.3 Other areas of the airport terminal building shall be classified in accordance with Chapter 4 of this standard based on the occupancy of the area. [**415:**4.5.1.5]

26.25.1.4 Water Supply. Water supply from public and private sources shall be adequate to supply maximum calculated sprinkler demand plus a minimum of 500 gpm (1900 lpm) for hose streams. The supply shall be available at the rate specified for a period of at least 1 hour. [**415:**4.5.5]

26.25.1.4.1 Main sizes shall be hydraulically calculated based on the total domestic and fire protection requirements. Mains shall be not less than 8 in. (200 mm) in diameter except that laterals shall be permitted to be 6 in. (150 mm) in diameter if not over 200 ft (61 m) long. [**415:**4.5.5.1]

26.25.2 Installation Requirements. (Reserved)

26.26 Aircraft Engine Test Facilities.

26.26.1 Design Requirements.

26.26.1.1* In engine test cells, the minimum design discharge density shall be 0.50 gpm/ft^2 (20.4 mm/min) of protected area. [**423:**7.6.3]

A.26.26.1.1 Because of the nature of the test cell fire potential, deluge systems are considered more appropriate than automatic sprinklers due to their speed of operation and simultaneous discharge of all nozzles; however, automatic sprinklers can be used as follows:

(1) In small cells [600 ft^2 (56 m^2) or less] where it is likely that all sprinklers would fuse at the same time
(2) As a backup to a manual water spray or other manual system
[**423:** A.7.6.3]

26.26.1.2 In engine test cells, water supplies shall be capable of meeting the largest demand at the design rate plus hose stream demand for a period of 30 minutes. [**423:**7.6.4]

26.26.1.2.1 Hose stream demand shall be a minimum of 250 gpm (950 lpm). [**423:**7.6.4.1]

26.26.1.2.2 The hydraulic calculation and the water supply shall be based on the assumption that all sprinklers in the test cell are operating simultaneously. [**423:**7.6.4.2]

26.26.2 Installation Requirements. (Reserved)

EDUFIRE.IR

26.27 Advanced Light Water Reactor Electric Generating Plants.

26.27.1 Design Requirements.

26.27.1.1* Sprinkler System Water Supply. The fire water supply shall be calculated on the basis of the largest expected flow rate for a period of 2 hours but shall not be less than 300,000 gal (1,135,500 L), and the following criteria also shall apply:

(1) The flow rate shall be based on 500 gpm (1900 lpm) for manual hose streams plus the largest design demand of any sprinkler or fixed water spray system as determined in accordance with this standard, with NFPA 15, or with NFPA 804.
(2) The fire water supply shall be capable of delivering the design demand specified in 26.27.1.1(1) with the hydraulically least demanding portion of fire main loop out of service.
[**804:**9.2.1]

It is important that fire protection water supplies for nuclear power plants be highly reliable and of adequate quantity and duration. Although NFPA 805, *Performance-Based Standard for Fire Protection for Light Water Reactor Electric Generating Plants*, allows for performance-based options, Chapter 5 of NFPA 805 also details minimum requirements. Fundamental requirements for water supplies are contained in Section 5.5 of NFPA 805.

A minimum fire protection water supply of not less than two separate 300,000 gal (1,135,500 L) water supplies is specified. This supply can be met by the use of two separate water storage tanks with a minimum of 300,000 gal (1,135,500 L) reserved for fire protection use. To increase reliability, the tanks must be interconnected such that fire pumps can take suction from either or both tanks. The tanks and piping must be arranged such that a failure in one tank or its piping will not allow both tanks to drain.

In some cases, fire pumps might take suction from a large body of water, such as a lake or a river. In those cases, two fire protection water supplies are not required. However, each fire pump must have a separate suction, and each suction and fire pump must be adequately separated.

The minimum duration of fire protection water supplies for nuclear power plants is 2 hours. The minimum hose stream demand is 500 gpm (1892.5 L/min). The flow rate must also include the largest demand of any sprinkler or water spray system. For many installations, the largest demand is for generator step-up transformer deluge water spray systems. Unique to nuclear power plants is the requirement to base the flow and the pressure demand on the least demanding section of the fire protection water supply distribution piping system that is out of service. This method provides for a higher reliability of the fire protection water supply with a single impairment to the distribution system.

A.26.27.1.1 The water supply for the permanent fire protection water system should be based on providing a 2-hour water supply for both items (1) and (2), as follows:

(1) Either item (a) or (b), whichever is larger:
  (a) The largest fixed fire suppression system demand
  (b) Any fixed fire suppression system demand that could be reasonably expected to operate simultaneously during a single event (e.g., turbine underfloor protection in conjunction with other fire protection systems in the turbine area)
(2) The hose stream demand of not less than 500 gpm (1900 L/min)
[**804:** A.9.2.1]

26.27.1.2 Yard Mains. The underground yard fire main loop shall be installed to furnish anticipated water requirements, and the following criteria also shall be met:

(1) The type of pipe and water treatment shall be design considerations, with tuberculation as one of the parameters.
(2) Means for inspecting and flushing the systems shall be provided.
[**804:**9.4.1]

EDUFIRE.IR

26.27.1.3 Cable Spreading Room. The cable spreading room shall have an automatic fixed water-based suppression system, and the following criteria also shall be met:

(1) The location of sprinklers or spray nozzles shall protect cable tray arrangements to ensure water coverage for areas that could present exposure fire hazards to the cable raceways.
(2) Automatic sprinkler systems shall be designed for a density of 0.30 gpm/ft^2 (12.2 mm/min) over the most remote 2500 ft^2 (230 m^2).

[**804:**10.4.1.1]

The cable spreading room is covered in 26.27.1.3. Paragraph 10.4.1.1 of NFPA 804, *Standard for Fire Protection for Advanced Light Water Reactor Electric Generating Plants,* requires that cable tunnels be provided with automatic fixed water-based suppression systems. The location of sprinklers or water spray nozzles should be arranged to provide adequate coverage for cable trays and any potential exposures, such as transient combustibles, to the cable trays. This provision requires careful engineering design for the actual installation and arrangement in the cable tunnel. Automatic sprinkler systems must be designed to provide a density of 0.30 gpm/ft^2 (12.2 mm/min) for the most remote 2500 ft^2 (230 m^2).

Additionally, 10.4.1.2 of NFPA 804 requires that suppression systems in cable spreading rooms be zoned. The flow demand is based on the demand of the most remote 2500 ft^2 (230 m^2) area operating, as well as the largest adjacent zone. Drainage should be adequate for the simultaneous actuation of two adjacent systems.

26.27.1.4 Cable Tunnels. [**804:**10.4.2]

NFPA 804 requires that cable tunnels be provided with automatic fixed water-based suppression systems. Where automatic sprinkler systems are used to meet this requirement, the sprinkler system must be designed to provide a density of 0.30 gpm/ft^2 (12.2 mm/min) for the most remote 100 linear ft (30 linear m) of the cable tunnel up to the most remote 2500 ft^2 (230 m^2). This ensures that an adequate water supply and sprinkler system discharge can be provided at the far end of any cable tunnel.

Additionally, NFPA 804 requires that the location of sprinklers or water spray nozzles be arranged to provide adequate coverage for cable trays and any potential exposures, such as transient combustibles, to the cable trays (see 10.4.2.2.2 in NFPA 804). This provision requires careful engineering design for the actual installation and arrangement in the cable tunnel.

26.27.1.4.1 Automatic sprinkler systems shall be designed for a density of 0.30 gpm/ft^2 (12.2 mm/min) for the most remote 100 linear ft (30 m) of cable tunnel up to the most remote 2500 ft^2 (230 m^2). [**804:**10.4.2.2.2]

26.27.1.4.2 Deluge sprinkler systems or deluge spray systems shall meet the following criteria:

(1) They shall be zoned to limit the area of protection to that which the drainage system can handle with any two adjacent systems actuated.
(2) They shall be hydraulically designed with each zone calculated with the largest adjacent zone flowing.

[**804:**10.4.2.2.4]

Deluge systems in cable tunnels must be zoned, with the flow demand based on the demand of the most remote 2500 ft^2 (230 m^2) area operating, as well as the largest adjacent zone. Drainage should be adequate for the simultaneous actuation of two adjacent systems.

26.27.1.5* Beneath Turbine Generator Operating Floor. All areas beneath the turbine generator operating floor shall be protected by an automatic sprinkler or foam-water sprinkler system meeting the following criteria:

(1) The sprinkler system beneath the turbine generator shall be designed around obstructions from structural members and piping.
(2) The sprinkler system shall be designed to a minimum density of 0.30 gpm/ft^2 (12.2 mm/min) over a minimum application of 5000 ft^2 (465 m^2).

[**804:**10.8.2.1]

EDUFIRE.IR

A.26.27.1.5 To avoid water application to hot parts or other water-sensitive areas and to provide adequate coverage, designs that incorporate items such as fusible element operated spray nozzles might be necessary. [**804:** A.10.8.2.1]

Sprinkler protection is not required at the roof of a high-bay turbine generator building. However, due to the oil hazards that can introduce combustible oils anywhere in the turbine building, wherever oil or other combustible materials that could be present in the turbine building might flow, automatic sprinkler protection should be provided throughout all areas of the turbine building below the turbine operating deck level. This requirement is currently specified as a single point density of 0.30 gpm/ft^2 (12.2 mm/min) over the most remote 2500 ft^2 (230 m^2).

26.27.1.6* Turbine Generator Bearings. [**804:**10.8.3]

A.26.27.1.6 Additional information concerning turbine generator fire protection can be found in EPRI Research Report 1843-2, "Turbine Generator Fire Protection by Sprinkler System." [**804:** A.10.8.3]

Pressurized lube oil piping poses the potential for three-dimensional, pressurized oil fires that are extremely difficult to control and extinguish. During emergencies, the duration of oil flow and fire can be extensive as lube oil continues to be provided while the turbine slows to a stop. Automatic water spray systems should be provided to protect the lube oil lines, including the piping that is located beneath the turbine skirt or lagging.

26.27.1.6.1 Lubricating oil lines above the turbine operating floor shall be protected with an automatic sprinkler system to a minimum density of 0.30 gpm/ft^2 (12.2 mm/min) that covers those areas subject to oil accumulation, including the area within the turbine lagging (skirt). [**804:**10.8.4]

26.27.1.6.2 Where shaft-driven ventilation systems are used, an automatic preaction sprinkler system providing a density of 0.30 gpm/ft^2 (12.2 mm/min) over the entire area shall be provided. [**804:**10.8.7(2)]

26.27.1.7 Standby Emergency Diesel Generators and Combustion Turbines. The sprinkler and water spray protection systems shall be designed for a 0.25 gpm/ft^2 (10.2 mm/min) density over the entire area. [**804:**10.9.3(2)]

When they are operating, diesel generators or combustion turbines combine fuel oil and lube oil hazards with continuous ignition sources. Automatic sprinkler, water spray, or foam-water sprinkler systems should be provided.

26.27.1.8 Fire Pump Room/House. If sprinkler and water spray systems are provided for fire pump houses, they shall be designed for a minimum density of 0.25 gpm/ft^2 (10.2 mm/min) over the entire fire area. [**804:**10.22.2]

If fire pump rooms include the use of diesel engine drivers, automatic sprinkler, water spray, or foam-water sprinkler systems should be provided.

26.27.1.9 Auxiliary Boilers. Sprinkler and water spray systems shall be designed for a minimum density of 0.25 gpm/ft^2 (10.2 mm/min) over the entire area. [**804:**10.24.3]

Oil-fired boilers or boilers using oil ignition should be provided with automatic sprinkler, water spray, or foam-water sprinkler systems designed for a minimum density of 0.25 gpm/ft^2 (10.2 mm/min) over the entire area.

26.27.2 Installation Requirements.

26.27.2.1 Yard Mains, Hydrants, and Building Standpipes. [**804:**9.4]

26.27.2.1.1 Approved visually indicating sectional control valves such as postindicator valves shall be provided to isolate portions of the main for maintenance or repair without

EDUFIRE.IR

simultaneously shutting off the supply to both primary and backup fire suppression systems. [**804:**9.4.2]

26.27.2.1.2* Sectional control valves shall allow maintaining independence of the individual loop around each unit, and the following also shall apply:

(1) For such installations, common water supplies shall also be permitted to be utilized.
(2) For multiple-reactor sites with widely separated plants [approaching 1 mi (1.6 km) or more], separate yard fire main loops shall be used.

[**804:**9.4.4]

A.26.27.2.1.2 A common yard fire main loop can serve multi-unit nuclear power plant sites if it is cross-connected between units. [**804:** A.9.4.4]

26.27.2.1.3 Sprinkler systems and manual hose station standpipes shall have connections to the plant underground water main so that a single active failure or a crack in a moderate-energy line can be isolated so as not to impair both the primary and the backup fire suppression systems unless otherwise permitted by the following:

(1) Alternatively, headers fed from each end shall be permitted inside buildings to supply both sprinkler and standpipe systems, provided steel piping and fittings meeting the requirements of ASME B31.1, *Code for Power Piping*, are used for the headers (up to and including the first valve) supplying the sprinkler systems where such headers are part of the seismically analyzed hose standpipe system.
(2) Where provided, such headers shall be considered an extension of the yard main system.
(3) Each sprinkler and standpipe system shall be equipped with an outside screw and yoke (OS&Y) gate valve or other approved shutoff valve.

[**804:**9.4.7]

The requirement in 26.27.2.1.3 is unique to nuclear power plants. The intent is that a single failure will not impair both the primary (automatic sprinkler) protection and the backup (manual hose stations) fire suppression systems. In most cases, this entails separate connections for sprinkler systems and standpipes to the underground fire protection water distribution system. Alternatively, internal piping headers fed from two directions can feed both the sprinkler system and the standpipe system, provided that steel piping and fittings meet the requirements of ANSI/ASME B31.1, *Code for Power Piping,* and the piping is part of a seismically analyzed hose standpipe system.

26.27.2.2 Cable Tunnels. The location of sprinklers or spray nozzles shall protect cable tray arrangements and possible transient combustibles to ensure water coverage for areas that could present exposure fire hazards to the cable raceways. [**804:**10.4.2.2.3]

26.27.2.3 Deluge. Deluge sprinkler systems or deluge spray systems shall meet the following criteria:

(1) They shall be zoned to limit the area of protection to that which the drainage system can handle with any two adjacent systems actuated.
(2) They shall be hydraulically designed with each zone calculated with the largest adjacent zone flowing.

[**804:**10.4.2.2.4]

26.27.2.4 Cable tunnels over 50 ft (15 m) long shall be provided with hose stations and portable fire extinguishers installed outside the tunnel. [**804:**10.4.2.4(3)]

EDUFIRE.IR

26.28 Light Water Nuclear Power Plants.

26.28.1 Design Requirements. A fire protection water supply of reliability, quantity, and duration shall be provided by one of the two following methods:

(1) A fire protection water supply of not less than two separate 300,000 gal (1,135,500 L) supplies shall be provided.
(2) The 2-hour fire flow rate for 2 hours shall be calculated, and the following criteria shall be met:

(a) The flow rate shall be based on 500 gpm (1900 lpm) for manual hose streams plus the largest design demand of any sprinkler or fixed water spray system(s) in the power block as determined in accordance with NFPA 13 or NFPA 15.
(b) The fire water supply shall be capable of delivering this design demand with the hydraulically least demanding portion of fire main loop out of service.

[**805:**5.5.1]

26.28.2 Installation Requirements.

26.28.2.1 Sprinkler systems and manual hose station standpipes shall be connected to the plant fire protection water main so that a single active failure or a crack to the water supply piping to these systems can be isolated so as not to impair both the primary and backup fire suppression systems. [**805:**5.5.12]

26.28.2.2 Each sprinkler and standpipe system shall be equipped with an outside screw and yoke (OS&Y) gate valve or other approved shutoff valve. [**805:**5.5.17]

26.29 Code for the Protection of Cultural Resource Properties — Museums, Libraries, and Places of Worship. [NFPA 909]

26.29.1 Design Requirements.

26.29.1.1* Standard-response sprinklers shall be permitted for use in light-hazard areas. [**909:**9.12.13.2]

A.26.29.1.1 Standard-response sprinklers employ more robust operating elements than quick-response sprinklers and can be more appropriate for use in areas where concern for inadvertent water discharge outweighs the advantages of thermal sensitivity. [**909:**A.9.12.13.2]

26.29.1.2* Preaction and dry pipe systems shall be designed to minimize the risk of corrosion in accordance with the requirements 9.12.13.3.1 through 9.12.13.3.6.5 of NFPA 909. [**909:**9.12.13.3]

A.26.29.1.2 Preaction and dry pipe sprinkler systems are more subject to corrosion than standard wet pipe systems, due to the presence of both air and moisture within the pipes. In addition to causing problems that could impair the operation of the sprinkler system and possibly result in system failures, such as preventing valves from opening, restricting water flow and pressure to the sprinklers, and clogging drops and branch lines. The higher rates of corrosion can also result in sprinkler system malfunctions such as leaks that can have a significant adverse impact on sensitive collections and cultural properties. The products of corrosion (black and orange residue made up primarily of ferric and ferrous oxides and hydroxides) that collect in the piping can cause considerable damage to artwork, historic

EDUFIRE.IR

fabric, and collections upon discharge. The corrosion in the systems can also lead to leaks and piping failures, especially at joints, along the bottom of pipes between roll grooves, and other places where moisture accumulates. Based on this, additional precautions are warranted in areas with susceptible collections or historic fabric, or where sprinkler system repairs or replacement of piping would put the building or contents at an unacceptable risk. [**909:**A.9.12.13.3]

26.29.1.3 System Design for Museums, Libraries, and Their Collections in Compact Storage.

26.29.1.3.1* The design shall recognize the nature of the potential threat of a fire that originates in a compact mobile storage unit, where fuel loads are invariably large and fire growth is significantly different from that in other kinds of storage. [**909:**9.12.24.4.1.3]

A.26.29.1.3.1 The automatic fire suppression system, the compact storage system, and the storage compartmentation features should be designed to limit fire damage in accordance with the facility's fire safety objectives (e.g., confine fire growth to the compact storage module of origin). Significant factors to consider include the number and size of the storage modules, the separation provided between the modules (end-to-end and back-to-back), and the type of materials being stored. In general, double-interlock preaction systems and dry pipe systems are inappropriate for compact storage, because of the additional delay they introduce, coupled with the delays in activation resulting from the compact storage units themselves. [**909:** A.9.12.24.4.1.3]

Other protection features should be considered to limit the extent of potential fire damage, including the following:

(1) Very high density sprinkler systems
(2) Quick-response sprinklers
(3) Early-warning smoke detection
(4) Spacers between carriages or, for automated systems, automatic park mode to increase flue spaces between carriages upon activation of a fire alarm or during idle periods
(5) Metal vertical barriers in the middle of the shelf
(6) Open-top shelving

[**909:**A.9.12.24.4.1.3]

26.29.1.3.2* The automatic fire suppression system, the compact storage system, and the storage compartmentalization features shall be designed to limit fire damage in accordance with the facility's fire safety objectives. [**909:**9.12.24.4.1.4(A)]

A.26.29.1.3.2 The system should be designed to confine fire growth to the compact storage module of origin or the shelving range of origin. [**909:**A.9.12.24.4.1.4(A)]

26.29.1.3.3 Design calculations shall include the number and size of the storage modules, the separation provided between the modules end-to-end and back-to-back, and the type of material being stored. [**909:**9.12.24.4.1.4(B)]

26.29.1.3.4 Where the automatic fire suppression is provided by automatic fire sprinkler systems, the systems shall be wet pipe, single interlock preaction, or single non-interlock preaction systems. [**909:**9.12.24.4.1.4(C)]

26.29.1.3.5 Dry pipe or double-interlock preaction systems shall not be installed in compact storage areas. [**909:**9.12.24.4.1.4(D)]

26.29.1.3.6 Where compact storage is installed in an existing storage area, the existing automatic fire detection and fire suppression systems shall be modified as required to accommodate the increased fire loading. [**909:**9.12.24.4.1.4(E)]

EDUFIRE.IR

26.29.2 Installation Requirements.

26.29.2.1* Branch lines shall be pitched at least ½ in. per 10 ft (4 mm/m), and mains shall be pitched at least ¼ in. per 10 ft (2 mm/m). [**909:**9.12.13.3.1]

A.26.29.2.1 Proper pitching is an important element in reducing the risk of corrosion. The pitch requirements included in this standard should be considered the minimum acceptable pitch. Where adequate clearance is provided to permit the system to be installed without causing interferences with structural elements or causing low points, pitches exceeding this minimum requirement such as ½ in. per 10 ft (4 mm/m) should be considered. [**909:**A.9.12.13.3.1]

26.29.2.2* Auxiliary drains shall be provided at all preaction system low points in accordance with the requirements of this standard for dry pipe systems whether the preaction system piping subject to freezing or not. [**909:**9.12.13.3.2.1]

N **A.26.29.2.2** Due to heightened concerns regarding the issues associated with corrosion, additional auxiliary drainage is needed for all preaction systems, regardless of whether or not the protected area is subject to freezing. [**909:**A.9.12.13.3.2.1]

26.29.2.3* Where steel pipe is used in dry pipe and preaction systems, it shall be assumed that the water supplies and environmental conditions contribute to unusual corrosive properties. [**909:**9.12.13.3.3]

N **A.26.29.2.3** A plan to address piping corrosion should include one or more of the following:

(1) Installation of sprinkler piping that is corrosion resistant – Galvanized steel piping is not considered corrosion resistant for the purposes of this recommendation. Galvanized coatings can corrode where water and oxygen are present inside system piping. When galvanized coatings fail, the remaining uncoated steel corrodes at an accelerated rate.
(2) Installation of a special listed pre-primed preaction system, filled with water under normal conditions.
(3) Use of a continuous source of dry inert gas for pressure maintenance.
(4) Testing of the water supply for corrosivity prior to connection to the sprinkler system.
(5) Equipping any source of compressed air used for pressure maintenance with an air dryer or nitrogen separator.
(6) Implementation of an approved plan for maintaining and monitoring the interior conditions of the pipe at established intervals and locations, including all of the following:
    (a) Testing water flow devices between the semiannual tests using a means that does not introduce fresh water into the system
    (b) Drying system piping before returning systems to service after trip tests or other incidents that introduce water into system piping beyond the riser
    (c) Inspecting for obstructions when any of the following conditions are observed:
        i Pinhole leaks
        ii Frequent operation of system air compressor(s)
        iii Corrosion on the outside of pipe joints, fittings, or sprinklers
        iv Pitting, nodules, tubercles, or carbuncles inside piping or valves
        v Foreign material in water during drain tests or plugging of inspector's test connection(s)
        vi Plugged sprinklers
        vi Plugged piping in sprinkler systems dismantled during building alterations
        vii Frequent false tripping of a dry pipe valve(s) with indications of corrosion inside the valve(s)
        ix A 50 percent increase in the time required for water to travel to the inspector's test connection after the valve trips during a full flow trip test of a dry pipe sprinkler system when compared to the original system acceptance test

[**909:** A.9.12.13.3.3]

EDUFIRE.IR

These options are based on those specified by this standard for applications where water supplies are known to be corrosive. They are recommended in this code for steel dry pipe and preaction systems because the levels of corrosion found in these systems are unacceptable for cultural resource facilities. Although this standard also allows the option of treating all water that enters the system with an approved corrosion inhibitor, experience using this option has not been satisfactory in cultural resource facilities due to potential formation of external crystals on piping and potential reduction in the service life of gaskets in mechanical couplings. This standard includes the additional option of using a special listed pre-primed preaction system, in which the piping is normally filled with water.

[**909:**A.9.12.13.3.3]

26.30 National Electrical Code.

26.30.1 Design Requirements. (Reserved)

26.30.2 Installation Requirements.

26.30.2.1 Dedicated Electrical Space. The space equal to the width and depth of the equipment and extending from the floor to a height of 6 ft (1.8 m) above the equipment or to the structural ceiling, whichever is lower, shall be dedicated to the electrical installation. No piping, ducts, leak protection apparatus, or other equipment foreign to the electrical installation shall be located in this zone.

Exception: Suspended ceilings with removable panels shall be permitted within the 1.8-m (6-ft) zone. [70:110.26(E)(1)(a)]

26.30.2.2 The area above the dedicated space required by 26.30.2.1 shall be permitted to contain foreign systems, provided protection is installed to avoid damage to the electrical equipment from condensation, leaks, or breaks in such foreign systems. [**70:**110.26(E)(1)(b)]

26.30.2.3 Sprinkler protection shall be permitted for the dedicated space where the piping complies with this section. [**70:**110.26(E)(1)(c)]

26.31 Fire Protection of Telecommunication Facilities.

26.31.1 Design Requirements. (Reserved)

26.31.2 Installation Requirements.

26.31.2.1 All piping for dry pipe and preaction sprinkler systems shall be installed with a pitch in accordance with this standard whether or not the piping is subjected to freezing conditions. [**76:**8.6.2.2.2]

26.32 Exhaust Systems for Air Conveying of Vapors, Gases, Mists, and Noncombustible Particulate Solids.

26.32.1 Design Requirements.

26.32.1.1 Any portion of an exhaust system utilizing combustible components or having the potential for combustible residue buildup on the inside, where the duct cross-sectional area is

EDUFIRE.IR

greater than or equal to 75 in.^{2} (480 cm^2), shall be provided with an automatic extinguishing system within the duct and at the duct intake, hood, enclosure, or canopy. [**91:**9.1]

26.32.1.2 When a sprinkler system is installed, means shall be provided to prevent water accumulation in the duct or flow of water back to a process subject that could be damaged by water. [**91:**9.2]

26.32.2 Installation Requirements. (Reserved)

26.33 Hypobaric Facilities.

26.33.1 Design Requirements.

26.33.1.1 A fire suppression system consisting of independently supplied and operating handline and fixed deluge-type water spray systems shall be installed. [**99B:**4.5.1.5]

26.33.1.2 Design of the fire suppression system shall be such that failure of components in either the handline or deluge system will not render the other system inoperative. [**99B:**4.5.1.6]

26.33.1.3 System design shall be such that activation of either the handline or the deluge system shall automatically cause the following:

(1) Visual and audio alarm indicators shall be activated at the chamber operator's console.
(2) All ungrounded electrical leads for power and lighting circuits contained inside the chamber shall be disconnected.
(3) Emergency lighting and communication, where used, shall be activated.
[**99B:**4.5.1.7]

26.33.1.4 Intrinsically safe circuits, including sound-powered communications, shall be permitted to remain connected when either the handline or deluge system is activated. [**99B:**4.5.1.8]

26.33.1.5 Control circuitry and other electrical equipment involved in the fire detection and suppression system shall be powered from the critical branch of the emergency electrical system and connected to the uninterruptible power supply (UPS). [**99B:**4.5.1.11]

26.33.1.6 In chambers that consist of more than one compartment, the deluge system shall operate independently or simultaneously even if the compartments are at different pressures (altitudes). [**99B:**4.5.2.2]

26.33.1.7 Fixed deluge systems shall not be required in chamber compartments that are used strictly as personnel transfer compartments and for no other purpose. [**99B:**4.5.2.3]

26.33.1.8 Manual activation and deactivation deluge controls shall be located at the operator's console and in each chamber compartment containing a deluge system. [**99B:**4.5.2.4]

26.33.1.9 Controls shall be designed to prevent unintended activation. [**99B:**4.5.2.4.1]

26.33.1.10 Water shall be delivered from the fixed discharge nozzles of the deluge system within 3 seconds of activation of any affiliated deluge control. [**99B:**4.5.2.5]

26.33.1.11* Total water demand shall be determined by multiplying the total chamber floor area by 7.5 gpm/ft^2 (306 mm/min). [**99B:**4.5.2.5.1]

A.26.33.1.11 The quantities and pressure of water for fire extinguishing indicated in 26.33.1.11 are based on limited testing and should be considered subject to change as additional data become available. It is recommended that spray coverage tests be carried out at maximum altitude for manned operations. [**99B:** A.4.5.2.5.1]

EDUFIRE.IR

26.33.1.12 The minimum operating pressure at the nozzle shall be 30 psi (2.1 bar). [**99B:**4.5.2.5.2]

26.33.1.13 The water supply shall be constantly and fully charged. [**99B:**4.5.2.6]

26.33.1.14 The water supply pressure shall be constantly monitored and an interlock shall prevent chamber operation if water supply pressure has fallen 10 percent below normal operating charge pressure. [**99B:**4.5.2.7]

26.33.1.15 There shall be water in the deluge system to maintain the flow specified in 26.33.1.11 simultaneously in each chamber containing the deluge system for 1 minute. [**99B:**4.5.2.8]

26.33.1.16 The limit on maximum extinguishment duration shall be governed by the chamber capacity (bilge capacity also, if so equipped) and/or its drainage system. [**99B:**4.5.2.9]

26.33.1.17 The deluge system shall have stored pressure to operate for at least 15 seconds without electrical branch power. [**99B:**4.5.2.10]

26.33.2 Installation Requirements. (Reserved)

26.34 Coal Mines.

26.34.1 Design Requirements.

26.34.1.1 Underground Mining Operations.

26.34.1.1.1* Fire sprinkler systems for underground mining operations shall be designed and installed in accordance with NFPA 120.

A.26.34.1.1.1 See 4.3.3 of NFPA 120 for unique requirements for protecting this unusual type of occupancy.

26.34.1.2 Coal Preparation Plants and Crusher Buildings.

26.34.1.2.1 When automatic sprinkler systems are to be supplied through the standpipe system, hydraulic calculations shall be used to ensure that the piping and the water supply meet the hose and automatic sprinkler demands simultaneously. [**120:**6.3.2.3.2]

26.34.1.3 Underground Conveyors.

26.34.1.3.1 The water supply shall be free of excessive sediment and corrosives. An approved strainer with a flush-out connection and manual shutoff valve shall be provided. [**120:**9.4.6.3.1.1]

26.34.1.3.2 The water supply shall provide the required water flow for not less than 60 minutes. [**120:**9.4.6.3.1.2]

26.34.1.3.3 Sprinkler systems shall meet the following requirements:

(1) The sprinklers shall be installed in accordance with this standard as far as practical, and shall have components that have been listed.
(2) The sprinkler head activation temperature shall not be less than 150°F (65.6°C) or greater than 300°F (148.9°C).
(3) Sprinklers shall be kept free of excessive rock dust, muck, conveyor string, or any other material that can block the discharge or insulate the fusible link.
(4) The application rate shall not be less than 0.25 gpm/ft^2 (10.2 mm/min) of the top surface of the top belt, bottom surface of the top belt, and the top surface of the lower belt.

EDUFIRE.IR

(5) With a water flow and pressure than is present under normal mine operating conditions, the residual pressure measured downstream of the opened sprinklers or the 8-head inspector's test connection of 10 psi (70 kPa) or greater for belt drive systems shall be maintained at all times.
(6) Maximum distance between nozzles on a branch line shall not exceed 8 ft (2.4 m).
(7) Piping for the deluge, foam, or closed-head sprinkler system shall be metal and listed for sprinkler applications.
(8)* Sprinkler piping shall be supported by UL-listed pipe hangers or other substantial metal supports such as angle iron, U bolts, or heavy chain.

N **A.26.34.1.3.3(8)** Pipe hangers should be designed to support five times the weight of the water-filled pipe plus 250 lb (114 kg) at each point of piping support. Hanger rods should be at least ⅜ in. (9.5 mm) thick for pipe up to 4 in. (102 mm). U hooks should be at least 5⁄16 in. (8 mm) thick for pipes up to 2 in. (50.8 mm). Eye rods should be at least ⅜ in. (9.5 mm) thick for pipe up to 4 in. (102 mm). This information is taken from Chapter 17 of this standard. [**120:**A.9.4.6.3.2(8)]

(9) The system shall be interlocked to shut down the conveyor and provide an audible and a visual alarm.
(10) The components of the system shall be located so as to minimize the possibility of damage by roof fall or by the moving belt and its load.

[**120:**9.4.6.3.2]

26.34.2 Installation Requirements.

26.34.2.1 Underground Conveyors.

26.34.2.1.1 Deluge water spray systems, foam systems, closed-head sprinkler systems, or dry-chemical systems automatically actuated by rise in temperature shall be installed at main and secondary belt conveyor drives. [**120:**9.4.6.1]

26.34.2.1.2 Fire suppression systems shall extend to the drive areas of belt conveyors, including drive motor(s), reducer, head pulley, and belt storage unit (takeup), including any hydraulic power unit; its electrical controls; and the top and bottom of the first 50 ft (15 m) of belt from the drive on the downwind side. [**120:**9.4.6.2]

26.34.2.1.3 Deluge water spray systems shall meet the requirements of 26.34.2.1.3.1 through 26.34.2.1.3.5. [**120:**9.4.6.3.3]

26.34.2.1.3.1 The system shall be activated by heat detectors or no less effective means. [**120:**9.4.6.3.3.1]

26.34.2.1.3.2 Detectors shall be located at the belt drive, hydraulic takeup unit (unless fire-resistive fluid is used), discharge roller, and the roof above the conveyor. [**120:**9.4.6.3.3.1(A)]

26.34.2.1.3.3 Detectors at the roof line should be spaced 8 ft to 10 ft (2.4 m to 3.0 m) apart along the entire length of the protected area of the belt. [**120:**9.4.6.3.3.1(B)]

26.34.2.1.3.4 The water spray nozzles shall be full cone, corrosion resistant [if less than ⅜ in. (0.95 cm) inside diameter or K-factor 4.2 or lower], and provided with blow-off dust covers. [**120:**9.4.6.3.3.2]

26.34.2.1.3.5 A closed sprinkler head shall be used over the electrical controls. [**120:**9.4.6.3.3.4]

26.34.2.2 Mine Surface Buildings.

26.34.2.2.1 In addition, if sprinklers are installed, water flow, valve tamper, and low building temperature alarms shall be provided. [**120:**8.6.1.2]

EDUFIRE.IR

26.35 Metal/Nonmetal Mining and Metal Mineral Processing Facilities.

26.35.1 Design Requirements.

26.35.1.1 Water Supplies.

26.35.1.1.1 When automatic sprinkler systems are supplied through the hand hose line standpipe system, hydraulic calculations shall be used to ensure that the piping and water supply will supply the hose and automatic sprinkler demands simultaneously. [**122:**6.2.3]

26.35.1.1.2 Where a fire water supply is required by the risk assessment, capacity and availability shall provide the water demand for fire-fighting purposes, including hose and sprinkler systems, for a minimum duration of 2 hours. [**122:**13.7.2]

26.35.1.2* Where provided, automatic sprinkler systems installed for the protection of flammable liquid or diesel fuel storage areas shall be of the foam-water type. [**122:**11.3.1]

A.26.35.1.2 Underground shaft mines that use diesel-powered equipment generally employ underground diesel fuel storage areas to facilitate equipment refueling. Adit-type mines in the western United States can initially locate diesel fuel storage and refueling facilities on the surface; however, as the active mine workings progress further from the adit portal(s), these facilities usually are moved underground. [**122:**A.11.3.1]

A common means of fire protection currently found in many underground diesel fuel storage areas is a fixed water sprinkler system. The federal Mine Safety and Health Administration (MSHA) currently approves such systems for this application. The consensus of the committee is that this situation represents a significant safety hazard. According to the NFPA *Fire Protection Handbook*, water sprinklers can be used on diesel fuel for control but not for extinguishment. [**122:**A.11.3.1]

"The Health and Safety Implications of the Use of Diesel- Powered Equipment in Underground Mines," a report by an interagency task group prepared for MSHA in 1985, concludes that "water spray or fog usually will not extinguish diesel fuel fires." [**122:**A.11.3.1]

In an underground mine, fire control is not sufficient; fire extinguishment is essential for the following reasons:

(1) As long as a fire burns, even if it does not grow in intensity or area and appears to be responsive to fire control, toxic smoke and fire gases are produced that can endanger persons in the mine.
(2) According to the NFPA *Fire Protection Handbook*, overpressure failure of containers when exposed to fire is considered the principal hazard of closed-container flammable and combustible liquid storage.
(3) Even a "controlled" fire can cause container failure, producing a fire so intense that the sprinkler system is unable to control it, much less extinguish it.
(4) Water sprays are not effective in extinguishing pressure fires, running fuel fires, and obstructed spill fires, all of which can occur in a diesel refueling area.
(5) Water supplies are limited in many underground mines. Fire control, therefore, should be considered temporary, because the fire will grow immediately to maximum intensity when the water supply is depleted.
(6) The vapor pressure of diesel fuel increases with elevation due to reduced barometric pressure. As a result, even fuels without flash point–reducing additives can become flammable, depending on the altitude at which they are used. This reduction in flash point could result in reclassification of the diesel fuel to a Class IC flammable liquid. There is no clear consensus in the literature and industry practice as to the effectiveness of fixed water sprays in controlling and extinguishing fires involving Class IC flammable liquids. Although industry

EDUFIRE.IR

practice strongly favors fixed water sprays for such applications, the literature and available research results clearly indicate the ineffectiveness of fixed sprays on Class IC liquids, especially on pressure fires, running fuel fires, and obstructed spill fires. [**122:**A.11.3.1]

Water sprinkler systems installed for the protection of diesel fuel storage areas might not be effective in suppression even though they do provide good control through cooling; foam-water systems can provide suppression. [**122:** A.11.3.1]

26.35.1.3 New Solvent Extraction (SX) Facilities.

26.35.1.3.1 Fixed fire suppression shall be provided for the following SX facility areas and equipment:

(1) Buildings housing SX processes
(2) Interior of all mixer-settler vessels/cells
(3) Crud tanks that include treatment filters and centrifuges
(4) Coalescers
(5) Along launders and weirs outside of mixer-settler vessels
(6) Inside pipe trenches carrying solvents
(7) Inside organic solvent and diluent tanks
(8) Inside dikes enclosing organic solvent storage tanks
(9) Over organic solvent pumps
(10) Over elevated pipe racks carrying organic solvents in plastic pipes
(11) Other areas handling, processing, or exposed to flammable or combustible liquids
[**122:**13.19.1]

26.35.1.3.2* Fire suppression for applications in 26.35.1.3.1 shall be water, foam, dry chemical, or water mist. [**122:**13.19.1.1]

A.26.35.1.3.2 Although water-only deluge, foam-water, and dry chemical systems might be effective in controlling or suppressing SX facility fires, there might be use for more than one application in a given facility. Manual response has been ineffective in recent losses and automatic suppression is advised for both existing and new facilities. [**122:** A.13.19.1.1]

While water spray can be effective, due to potentially high flow requirements a mixer-settler cell might overflow during the suppression process. This might create additional concerns with drainage and fire spread. [**122:** A.13.19.1.1]

Foam has been shown to be an effective suppressant medium for SX fires. However, environmental aspects, potential contamination of process liquids (particularly associated with accidental system initiation), and the difficulty or inability to conduct system flow tests on a periodic basis are negative points in the selection of foam. [**122:** A.13.19.1.1]

High pressure water mist or fog might prove to be a potentially effective suppressant medium and might not create the contamination, environmental, and testing obstacles that accompany foam or the large volumes that accompany conventional high density water deluge systems. Currently, there are no public domain tests conducted on mist systems for pool fires of the size involved in a large SX settler; thus, actual suppressability under all fire conditions has not been demonstrated. [**122:** A.13.19.1.1]

26.35.1.3.3* Design of fire suppression systems in 26.35.1.3.1 shall be based on criteria set forth in NFPA 11, NFPA 15, NFPA 16, and NFPA 17. [**122:**13.19.1.2]

A.26.35.1.3.3 The following best practices design guidance for automatic fire suppression systems is advised:

For settler tanks or cells, use either Type 1 foam chambers or open head deluge sprinklers with foam discharge. When using foam chambers, provide a 3 percent aqueous film forming foam (AFFF) foam discharge, in accordance with NFPA 11, with a density of 0.1 gpm/ft^2

EDUFIRE.IR

(4.1 l/min/m^2) over the entire settler area. When using open head deluge sprinklers, provide a 3 percent AFFF foam discharge, in accordance with NFPA 16, with a density of 0.16 gpm/ft^2 (6.5 mm/min). Design for a 20-minute discharge period. [**122:** A.13.19.1.2]

For mixers, launders, drainage sumps, and piping trenches, use open head deluge sprinklers and provide a 3 percent AFFF foam discharge, in accordance with NFPA 16, with a density of 0.16 gpm/ft^2 (6.5 mm/min) and a 20-minute foam discharge period. [**122:** A.13.19.1.2]

For the interior of tank farm vessels containing combustible or flammable liquids such as loaded organic tanks, coalescers, crud treatment tanks, and diluent tanks use a Type 1 foam chamber and provide a 3 percent automatic AFFF foam discharge, in accordance with NFPA 11, into each of the tanks with a density of 0.1 gpm/ft^2 (4.1 mm/min) and a 20-minute foam discharge period. [**122:** A.13.19.1.2]

For the exterior surfaces of tank farm equipment containing combustible or flammable liquids such as loaded organic tanks, coalescers, crud treatment tanks, diluent tanks, crud treatment filters, centrifuges, pumps, and pipe racks, provide automatic open head (water only) deluge sprinklers based on a discharge density of 0.3 gpm/ft^2 (12.2 mm/min). [**122:** A.13.19.1.2]

26.35.1.3.4* Actuation of fire suppression systems in 26.35.1.3.1 shall be automatic. [**122:**13.19.1.3]

A.26.35.1.3.4 Actuation of automatic fire suppression systems can be done using ultraviolet/infrared (UV/IR) dual spectrum detectors, heat detection cable, rate of rise heat detectors, or standard air pilot heads. High speed detection is considered advisable to suppress a solvent fire in its incipient stages. [**122:** A.13.19.1.3]

26.35.1.3.5 As exposure protection, automatic water-only deluge (open-head) sprinkler systems shall be provided between mixer-settler trains if spaced closer than 50 ft (15 m) from each other. [**122:**13.19.2]

26.35.1.3.6 As exposure protection, automatic water-only deluge sprinkler systems shall be provided around the exterior perimeter of organic solvent tanks if spaced closer than 50 ft (15 m) from each other. [**122:**13.19.3]

26.35.1.3.7 As exposure protection, automatic fire suppression shall be provided over other critical equipment (i.e., transformers) or outside along important building walls [i.e., motor control center (MCC) rooms] that are within 50 ft (15 m) of a solvent fire area. [**122:**13.19.4]

26.35.1.3.8 Hydraulic design of automatic fire suppression systems in 26.35.1.3.1 shall include the simultaneous operation of all fire protection systems associated with a single (multi-cell) train. [**122:**13.19.5]

26.35.1.3.9 The total flow rate of foam application and water associated with the discharge of automatic fire extinguishing systems, fixed monitors, and hydrants shall determine the total volume of fire water required. [**122:**13.19.6]

26.35.2 Installation Requirements. (Reserved)

26.36 Hazardous Materials Code.

Requirements for certain hazardous materials have been consolidated into NFPA 400, *Hazardous Materials Code*, which establishes a maximum allowable quantity (MAQ) for each of the hazards identified in that standard. Where the user maintains a stock of the material that is less than the MAQ, no additional fire protection measures are needed. If the MAQ is exceeded, additional fire protection measures must be considered. In many cases, this includes supplementing the sprinkler system's designed density to accommodate the additional hazard. In those instances, the sprinkler requirements for the materials have been extracted in Section 22.36.

EDUFIRE.IR

26.36.1 Design Requirements. Sprinkler system discharge criteria for the protection of hazardous materials shall comply with NFPA 400.

26.36.1.1 Requirements for Occupancies Storing Quantities of Hazardous Materials Exceeding the Maximum Allowable Quantities per Control Area for High Hazard Contents. The design of the sprinkler system shall be not less than ordinary hazard Group 2 in accordance with this standard except as follows:

(1) Where different requirements are specified in Chapters 11 through 21 of NFPA 400
(2) Where the materials or storage arrangement requires a higher level of sprinkler system protection in accordance with nationally recognized standards
(3) Where approved alternative automatic fire extinguishing systems are permitted
[**400:**6.2.1.1.1]

26.36.1.2 General Requirements for Storage of Organic Peroxide Formulations.

26.36.1.2.1 Where required by other provisions of this code, automatic sprinklers and water spray systems shall be designed and installed according to the requirements of this standard and NFPA 15 and shall provide the following discharge densities:

(1) Class I — 0.50 gpm/ft^2 (20.4 mm/min)
(2) Class II — 0.40 gpm/ft^2 (16.3 mm/min)
(3) Class III — 0.30 gpm/ft^2 (12.2 mm/min)
(4) Class IV — 0.25 gpm/ft^2 (10.2 mm/min)
[**400:**14.2.5.1]

26.36.1.2.2 The system shall be designed as follows:

(1) It shall provide the required density over a 3000 ft^2 (280 m^2) area for areas protected by a wet pipe sprinkler system or single-interlock preaction sprinkler system.
(2) Buildings using a dry pipe sprinkler system shall be provided with a required density over the hydraulically most remote 3900 ft^2 (360 m^2) design area, and, if used, sprinklers shall be within 6 ft (1.8 m) of the top of any stored organic peroxide formulation.
(3) The entire area of any building of less than 3000 ft^2 (280 m^2) shall be used as the area of application.
[**400:**14.2.5.2]

26.36.1.2.3 Where required for detached storage buildings containing Class I organic peroxide formulations in quantities exceeding 2000 lb (907 kg), automatic sprinkler protection shall be open-head deluge-type, designed and installed in accordance with this standard. [**400:**14.2.5.3]

26.36.1.3 Indoor Storage of Oxidizer Solids and Liquids.

26.36.1.3.1 Sprinkler protection for Class 2 oxidizers shall be designed in accordance with Table 26.36.1.3.1. [**400:**15.3.2.3.4.1]

26.36.1.3.2 Ceiling sprinklers shall be high-temperature sprinklers. [**400:**15.3.2.3.4.2]

26.36.1.3.3 Storage Protection for Class 2 Oxidizers with In-Rack Sprinklers.

(A) In-rack sprinklers shall be quick-response sprinklers with an ordinary-temperature rating and have a K-factor of not less than K = 8.0. [**400:**15.3.2.3.4.3(A)]

(B) In-rack sprinklers shall be designed to provide 25 psi (172 kPa) for the six most hydraulically remote sprinklers on each level. [**400:**15.3.2.3.4.3(B)]

(C) The in-rack sprinklers shall be 8 ft to 10 ft (2.4 m to 3.0 m) spacings in the longitudinal flue space at the intersection of the transverse flue spaces. [**400:**15.3.2.3.4.3(C)]

EDUFIRE.IR

TABLE 26.36.1.3.1 *Ceiling Sprinkler Protection for Class 2 Oxidizers in Palletized or Bulk and Rack Storage Areas*

	Ceiling Sprinklers						
	Storage Height		*Density*		*Area of Application*		
Type of Storage	*ft*	*m*	*gpm/ft²*	*mm/min*	*ft²*	*m²*	*In-Rack Sprinklers*
Palletized or bulk	8	2.4	0.20	8.2	3750	350	—
Palletized or bulk	12	3.7	0.35	14.3	3750	350	—
Rack	12	3.7	0.20	8.2	3750	350	One line above each level of storage, except the top level
Rack	16	4.9	0.30	12.2	2000	185	One line above each level of storage, except the top level

[**400:** Table 15.3.2.3.2.10(B)]

26.36.1.3.4 Sprinkler Criteria for Class 3 Oxidizers.

26.36.1.3.4.1 Class 3 Oxidizers Less than 2700 lb (1225 kg).

(A) Sprinkler design criteria for buildings that require sprinkler protection and contain total quantities of Class 3 oxidizers less than 2700 lb (1225 kg) shall be in accordance with the requirements of 26.36.1.3.4.1(B). [**400:**15.3.2.4.13.1(A)]

(B) Facilities that require sprinkler protection and contain total quantities of Class 3 oxidizers greater than 200 lb (91 kg), but less than 2700 lb (1225 kg), shall follow the sprinkler design criteria in Table 26.36.1.3.4.1(B). [**400:**15.3.2.4.13.1(B)]

TABLE 26.36.1.3.4.1(B) *Sprinkler Protection of Class 3 Oxidizers Stored in Total Quantities Greater than 200 lb (91 kg) but Less than 2700 lb (1225 kg)*

Storage Parameters	*Shelf*	*Bulk or Pile*	*Bulk or Pile*	*Rack*
Maximum storage height	6 ft (1.8 m)	5 ft (1.5 m)	10 ft (3 m)	10 ft (3 m)
Maximum ceiling height	25 ft (7.6 m)	25 ft (7.6 m)	25 ft (7.6 m)	NA
Aisles — pile separation	4 ft (1.2 m) min. clear aisles	4 ft (1.2 m) min. clear aisles	8 ft (2.4 m) min. clear aisles	8 ft (2.4 m) min. clear aisles
Ceiling design criteria	18.3 mm/min / 185 m²	14.3 mm/min / 465 m² or 24.5 mm/min / 185 m²	26.5 mm/min / 465 m²	0.35 gpm/ft²/or 5000 ft² or 0.6 gpm/ft²/2000 ft²
In-rack sprinklers	NP	NP	NA	See 26.36.1.3.4.2
Hose stream demand	500 gpm	500 gpm	500 gpm	500 gpm
Duration	120 minutes	120 minutes	120 minutes	120 minutes

For SI units, 1 gal = 3.79 L. NA: Not applicable. NP: Not permitted.
[**400:** Table 15.3.2.4.13.1(B)]

EDUFIRE.IR

26.36.1.3.4.2 Storage Protection for Class 3 Oxidizers In-Rack Sprinkler Criteria.

(A) Where required by Table 26.36.1.3.4.1(B), in-rack sprinkler protection shall be as follows:

(1) In-rack sprinklers shall be installed above every level of oxidizer storage.
(2) In-rack sprinklers shall be spaced at maximum 4 ft (1.2 m) intervals to provide one sprinkler in each flue space.
(3) In-rack sprinklers shall be quick-response sprinklers with an ordinary-temperature rating and have a K-factor of not less than K = 8.0.
(4) In-rack sprinklers shall be designed to provide 25 psi (172 kPa) for the six most hydraulically remote sprinklers on each level.

[**400:**15.3.2.4.13.3(A)]

26.36.1.3.4.3 Class 3 Oxidizers Greater than or Equal to 2700 lb (1225 kg). The sprinkler protection required by 26.36.1.3.4.3 shall be in accordance with Table 26.36.1.3.4.3. [**400:**15.3.2.4.13.4(B)]

TABLE 26.36.1.3.4.3 *Sprinkler Protection of Class 3 Oxidizers Stored in Total Quantities of Greater than or Equal to 2700 lb (1225 kg)*

Storage Parameters	*Bulk or Pile*	*Rack*
Maximum storage height	5 ft (1.5 m)	10 ft (3 m)
Maximum ceiling height	25 ft (7.6 m)	NP
Aisles — pile separation	8 ft (2.4 m) min. clear aisles	8 ft (2.4 m) min. clear aisles
Ceiling design criteria	0.35 gpm/ft^2/5000 ft^2 (1.32 L/min/m^2/464.5 m^2)	Predominant for other commodities but not less than ordinary hazard Group II
In-rack sprinklers	NP	See 26.36.1.3.4.4(B)
Hose stream demand	500 gpm (1900 lpm)	500 gpm (1900 lpm)
Duration	120 minutes	120 minutes

NP: Not permitted.

[**400:** Table 15.3.2.4.13.4(B)]

26.36.1.3.4.4 Special In-Rack Sprinkler Protection for Class 3 Oxidizers.

(A) Where required by Table 26.36.1.3.4.3, special in-rack sprinkler protection, which is required by 26.36.1.3.4.4(C), shall be as shown in Figure 26.36.1.3.4.4(A). [**400:**15.3.2.4.13.5(A)]

(B) In-rack automatic sprinklers shall be provided under each horizontal barrier and arranged in accordance with 26.36.1.3.4.4(C) through 26.36.1.3.4.4(J). [**400:**15.3.2.4.13.5(L)]

(C) For double-row racks, two lines of in-rack sprinklers shall be provided between the face of the rack and the longitudinal vertical barrier located in the center of the rack. [**400:**15.3.2.4.13.5(M)]

(D) For single-row racks, two lines of in-rack sprinklers shall be provided between each rack face. [**400:**15.3.2.4.13.5(N)]

EDUFIRE.IR

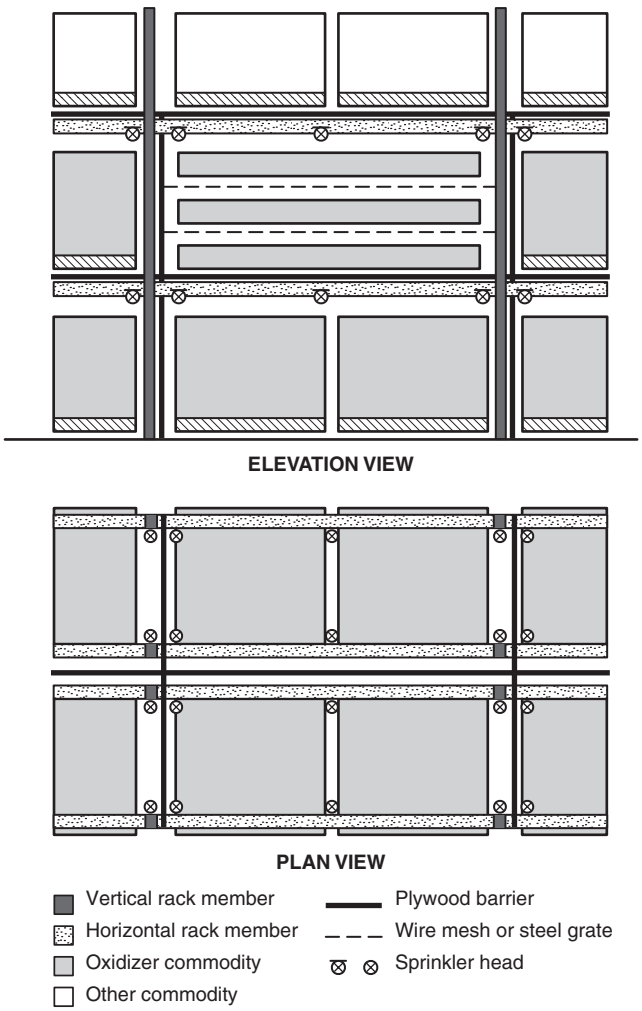

FIGURE 26.36.1.3.4.4(A) *Arrangement of Barriers and In-Rack Sprinklers for Special Fire Protection Provisions. [400: Figure 15.3.2.4.13.5(A)]*

(E) Three in-rack sprinklers shall be provided on each in-rack sprinkler line as follows:

(1) Two sprinklers on each line shall be spaced approximately 1½ in. (40 mm) from each transverse vertical barrier.
(2) One in-rack sprinkler on each in-rack sprinkler line shall be located approximately equidistant between the transverse vertical barriers.

[**400:**15.3.2.4.13.5(O)]

(F) In-rack sprinklers shall be of the upright or pendent type, with the fusible element located no more than 6 in. (150 mm) from the horizontal barrier. [**400:**15.3.2.4.13.5(P)]

(G) The stock shall be maintained at least 6 in. (152.4 mm) below the sprinkler deflector. [**400:**15.3.2.4.13.5(Q)]

(H) In-rack sprinklers shall be K = 8.0, quick-response, ordinary-temperature-rated sprinklers. [**400:**15.3.2.4.13.5(R)]

EDUFIRE.IR

(I) The in-rack sprinkler system shall be designed to supply 6 sprinklers on each line, with a total of 12 sprinklers operating at gauge pressure of 25 psi (172 kPa). [**400:**15.3.2.4.13.5(S)]

(J) The design of the in-rack sprinkler system shall be independent of, and shall not be required to be balanced with, ceiling sprinkler systems. [**400:**15.3.2.4.13.5(T)]

26.36.1.3.4.5 Sprinkler Criteria for Class 4 Oxidizers.

(A) Sprinkler protection for Class 4 oxidizers shall be installed on a deluge sprinkler system to provide water density of 0.35 gpm/ft^2 (14.4 mm/min) over the entire storage area. [**400:**15.3.2.5.4.6(A)]

(B) Sprinkler protection shall be installed in accordance with this standard. [**400:**15.3.2.5.4.6(B)]

26.36.2 Installation Requirements. (Reserved)

References Cited in Commentary

National Fire Protection Association, 1 Batterymarch Park, Quincy, MA 02169-7471.

NFPA 30, *Flammable and Combustible Liquids Code,* 2018 edition.

NFPA 30B, *Code for the Manufacture and Storage of Aerosol Products*, 2018 edition.

NFPA 33, *Standard for Spray Application Using Flammable or Combustible Materials*, 2018 edition.

NFPA 36, *Standard for Solvent Extraction Plants,* 2017 edition.

NFPA 130, *Standard for Fixed Guideway Transit and Passenger Rail Systems,* 2017 edition.

NFPA 400, *Hazardous Materials Code*, 2019 edition.

NFPA 409, *Standard on Aircraft Hangars*, 2016 edition.

NFPA 804, *Standard for Fire Protection for Advanced Light Water Reactor Electric Generating Plants,* 2015 edition.

NFPA 805, *Performance-Based Standard for Fire Protection for Light Water Reactor Electric Generating Plants*, 2015 edition.

American Society of Mechanical Engineers, Two Park Avenue, New York, NY 10016-5990.

ANSI/ASME B31.1, *Code for Power Piping,* 2001.

FM Global, 1301 Atwood Avenue, P.O. Box 7500, Johnston, RI 02919.

Technical Report No. J.I.OD2R4.PR, "Full Scale Fire Tests: Sprinkler Protection for Rack Storage of Plastic-Wrapped (Uncartoned) Aerosols."

Underwriters Laboratories Inc., 333 Pfingsten Road, Northbrook, IL 60062-2096.

UL 103, *Factory-Built Chimneys for Residential Type and Building Heating Appliances,* 2006.

U.S. Government Publishing Office, 732 North Capitol Street, NW, Washington, DC 20401-0001.

U.S. Occupational Safety and Health Administration, Process Safety Management Rule, Title 29, Code of Federal Regulations, Part 1910.119.

Nugent, D. P., *Directory of Fire Tests Involving Storage of Flammable and Combustible Liquids in Containers,* 3rd edition, Schirmer Engineering Corp., Deerfield, IL, October 2000 (available from the Society of Fire Protection Engineers, Bethesda, MD).

Nugent, D. P., "Fire Tests Involving Storage of Flammable and Combustible Liquids in Small Containers," *Journal of Fire Protection Engineering,* 6(1):1994.

EDUFIRE.IR

CHAPTER

27

Plans and Calculations

REORGANIZATION NOTE

Chapter 27 of the 2019 edition contains the requirements from Chapter 23 of the 2016 edition.

Chapter 27 covers the requirements for the preparation of plans and calculations. These requirements include those provisions necessary for the fabrication and installation of a sprinkler system by the installing contractor as well as those provisions needed to demonstrate compliance to the authority having jurisdiction that the design meets the requirements of NFPA 13.

Section 27.1 contains the requirements for the information that must be shown on the plans to confirm that the design and the layout of the system are appropriate. Sections 27.2 and 27.3 contain detailed provisions of the hydraulic calculation procedure that must be followed. Section 27.4 contains a description of the standard format for presentation of the hydraulic calculations. Section 27.5 provides direction on the use of the pipe schedule method for sizing of piping.

The two methods allowed for verifying that the proposed pipe sizes are appropriate are the hydraulic calculation method in Section 27.3 and the pipe schedule method in Section 27.5. NFPA 13 requires that only one of those two methods be used.

Where utilized, Chapter 27 lays out a standardized procedure for performing the hydraulic calculations. This chapter also requires the use of a uniform format to ensure that the information is consistently reported and easy to read and understand, regardless of the method used to perform the calculations. The commentary text in this chapter is intended to enhance and explain the language in the standard and the background information on compliance.

SEE ALSO

The following features at the end of Chapter 27:

- Sprinkler Project Workflow Documents
- Plan Review Checklist
- Darcy-Weisbach Calculations
- Velocity Pressure Calculations
- Flow Through Orifices
- Hardy-Cross Method
- Simple Loop Calculations
- Remote Areas

27.1* Working Plans.

The sprinkler system design process is continually changing in response to new technology and market conditions. Generally, plans are prepared primarily by the installing contractor, but more owners and authorities having jurisdiction are now requiring that plans be prepared by licensed fire protection engineers and that the plans be included as part of the overall building design package submittal for approval.

The use of building information modeling (BIM) has led to greater coordination of all building elements, including the sprinkler system. This coordination requires more upfront design effort, which often results in preparation of sprinkler construction drawings prior to selection of the installing contractor.

The growing trend toward the design/build delivery method has also affected the design process. When projects are completed using this method, the general contractor is responsible for both project design and construction. The design team and the subcontractors are selected by the general contractor. The design professionals work together with the installing contractors to prepare the construction documents.

EDUFIRE.IR

ASK THE AHJ

Will a set of plans be rejected if every item in 27.1.1.1, 27.1.3, 27.1.4 and 27.1.5 — for example, the compass direction is not indicated — is not submitted to the authority having jurisdiction?

Although a set of plans missing one item required by Section 27.1 could be rejected, most authorities having jurisdiction will approve plans with comments that must be addressed prior to installation if the intent of the design/layout can be deciphered. However, it is advantageous for the preparer to include all the required items for two reasons: (1) including all the details generally will speed up the review time, and (2) most authorities having jurisdiction generally will scrutinize the plans less when all the information is readily available and there are no obvious red flags.

SEE ALSO

The "Sprinkler Project Workflow Documents" feature at the end of the chapter (pp. 1067–1072).

A.27.1 Preliminary plans should be submitted for review to the authority having jurisdiction prior to the development of working plans *[see Figure A.27.1(a)]*. The preliminary plans can be part of the construction documents submitted in order to obtain a building permit. However, working drawings in accordance with Section 27.1 should be submitted and approved prior to the installation of system equipment. Preliminary plans should include as much information as is required to provide a clear representation of the hazard to be protected, the system design concept, the proposed water supply configuration, and building construction information pertinent to system layout and detailing.

The owner's information certificate, shown as Figure A.27.1(b), should be used to obtain a declaration of the intended use of the occupancy to be protected.

Drawings that accompany the certificate should include the following:

(1) Name of owner and occupant.
(2) Location, including street address.
(3) Point of compass.
(4) Construction and occupancy of each building.
(5) Building height in feet.
(6) Waterflow test information. If a waterflow test of the city main is available, the drawings should indicate the date and time of the test, the name of the party that conducted the test, the location of the hydrants where the flow was taken and where static and residual pressure readings were recorded *(see A.5.2.2)*, the size and configuration of mains supplying the hydrants, the size and number of open hydrant butts that flood, and results of the test.
(7) Building features such as combustible concealed spaces, floor openings, areas subject to freezing, and areas from which it is intended to omit sprinkler protection.
(8) Proposed location and approximate size, if a water supply employing pumps or tanks is contemplated.
(9) Name and address of party submitting the preliminary plans.
(10) Tentative location of major piping, including mains underground, risers, overhead mains, and fire department connections.

Preliminary plans generally are prepared by a registered design professional in conjunction with the development of the rest of the building. Although the preliminary plans are not required to be drawings, sometimes drawings are provided to convey the important design information in an efficient manner. The preliminary plans are the descriptions of the building and the sprinkler system, including the design specifications that convey information on how the building will be used and how the sprinkler system is intended to perform. The submission to and review of preliminary plans by the authority having jurisdiction can allow for early verification of the key design concepts and discovery of areas of disagreement. Such early discovery can allow for necessary corrective actions prior to full design development. The preliminary plans are different from the shop drawings or working plans. See the commentary after 27.1.1.1 for more information on the working plans.

EDUFIRE.IR

ASK THE AHJ

Is completion of the form in Figure A.27.1(b) sufficient to meet the requirements of Section 4.2, 27.1.1.1(4), and 27.1.4 for an owner's certificate?

Because the form in Figure A.27.1(b) is part of an annex, the requirement can be satisfied without using the exact form in the figure. In the case of storage hazards, the designer must provide more specific information than is requested on the form. Many owners need to be prompted on the specifics of the storage arrangement to identify the correct sprinkler system design criteria. For example, many owners might indicate that they will have rack storage but fail to specify whether it will contain open racking or be single-, double-, or multiple-row racking, the width of the aisles, and so on.

FAQ

Is there a general source of information for symbols used in plan drawings?

Some of the symbols commonly used in plan drawings can be found in NFPA 170, *Standard for Fire Safety and Emergency Symbols.* Any symbol used in the plan drawings that is not a standard symbol should be explained in the legend or in another obvious location on the working plans.

Figure A.27.1(a) shows a preliminary plan that uses a drawing to convey the important information. Note that the sprinkler system is sketched in to show which portions of the building will be protected but that the dimensions and pipe sizes are omitted. The importance of this drawing is to show which spaces will be sprinklered (including the blind space above the offices in the southwest corner), where the riser will go, and the location of the building's structural members, the water supply, and the underground main bringing water from the city main into the building.

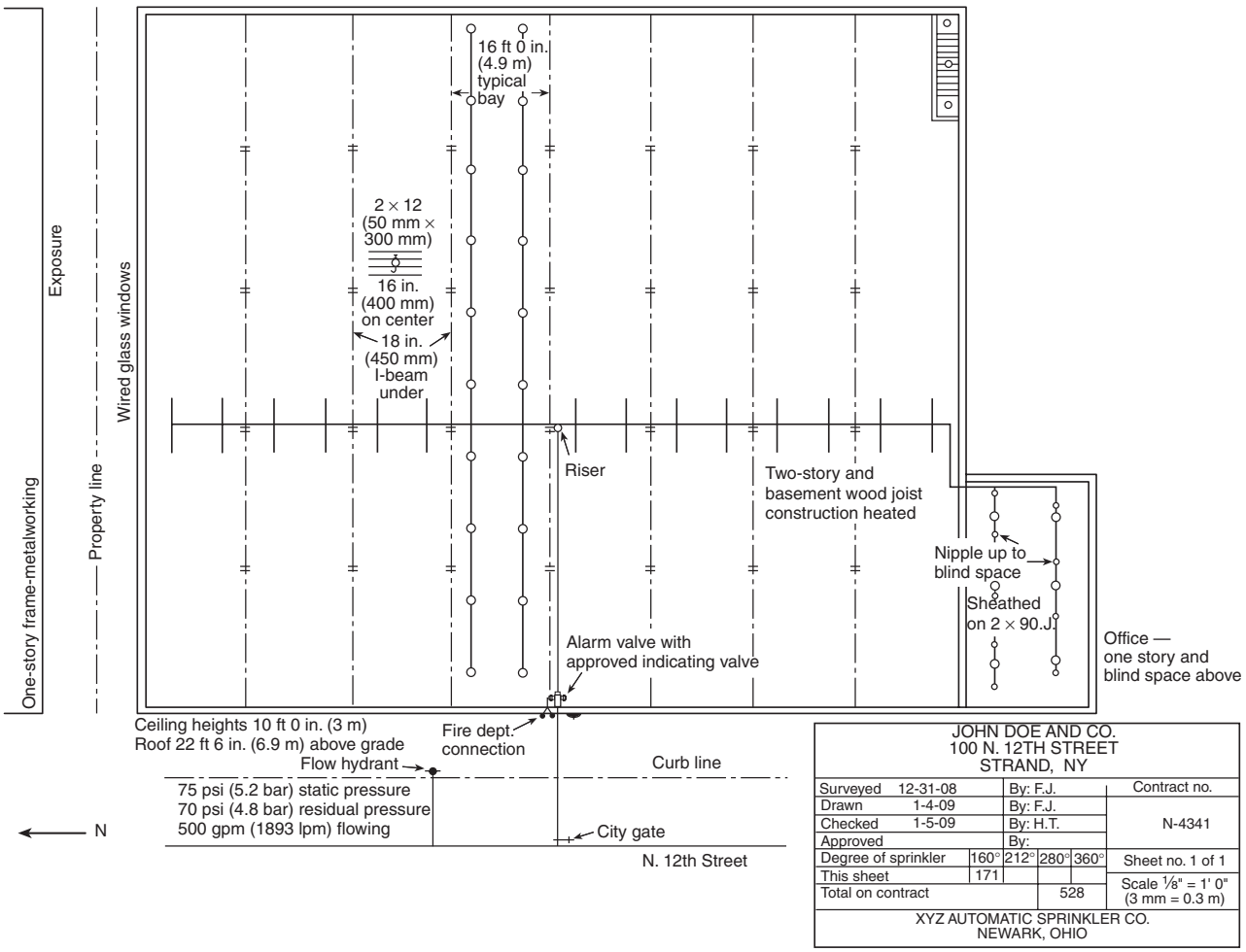

FIGURE A.27.1(a) *Typical Preliminary Plan.*

EDUFIRE.IR

OWNER'S INFORMATION CERTIFICATE

Name/address of property to be protected with sprinkler protection:

_____

_____

Name of owner: _____

Existing or planned construction is:

❏ Fire resistive or noncombustible

❏ Wood frame or ordinary (masonry walls with wood beams)

❏ Unknown

Describe the intended use of the building: _____

_____

_____

Note regarding speculative buildings: The design and installation of the fire sprinkler system is dependent on an accurate description of the likely use of the building. Without specific information, assumptions will need to be made that will limit the actual use of the building. Make sure that you communicate any and all use considerations to the fire sprinkler contractor in this form and that you abide by all limitations regarding the use of the building based on the limitations of the fire sprinkler system that is eventually designed and installed.

Is the system installation intended for one of the following special occupancies:

Aircraft hangar	❏ Yes	❏ No
Fixed guideway transit system	❏ Yes	❏ No
Race track stable	❏ Yes	❏ No
Marine terminal, pier, or wharf	❏ Yes	❏ No
Airport terminal	❏ Yes	❏ No
Aircraft engine test facility	❏ Yes	❏ No
Power plant	❏ Yes	❏ No
Water-cooling tower	❏ Yes	❏ No

If the answer to any of the above is "yes," the appropriate NFPA standard should be referenced for sprinkler density/area criteria.

Indicate whether any of the following special materials are intended to be present:

Flammable or combustible liquids	❏ Yes	❏ No
Aerosol products	❏ Yes	❏ No
Nitrate film	❏ Yes	❏ No
Pyroxylin plastic	❏ Yes	❏ No
Compressed or liquefied gas cylinders	❏ Yes	❏ No
Liquid or solid oxidizers	❏ Yes	❏ No
Organic peroxide formulations	❏ Yes	❏ No
Idle pallets	❏ Yes	❏ No

If the answer to any of the above is "yes," describe type, location, arrangement, and intended maximum quantities.

_____

_____

_____

© 2018 National Fire Protection Association NFPA 13 (p. 1 of 2)

FIGURE A.27.1(b) *Owner's Information Certificate.*

EDUFIRE.IR

Indicate whether the protection is intended for one of the following specialized occupancies or areas:

Spray area or mixing room	❑ Yes	❑ No
Solvent extraction	❑ Yes	❑ No
Laboratory using chemicals	❑ Yes	❑ No
Oxygen-fuel gas system for welding or cutting	❑ Yes	❑ No
Acetylene cylinder charging	❑ Yes	❑ No
Production or use of compressed or liquefied gases	❑ Yes	❑ No
Commercial cooking operation	❑ Yes	❑ No
Class A hyperbaric chamber	❑ Yes	❑ No
Cleanroom	❑ Yes	❑ No
Incinerator or waste handling system	❑ Yes	❑ No
Linen handling system	❑ Yes	❑ No
Industrial furnace	❑ Yes	❑ No
Water-cooling tower	❑ Yes	❑ No

If the answer to any of the above is "yes," describe type, location, arrangement, and intended maximum quantities.

_____

_____

Will there be any storage of products over 12 ft (3.7 m) in height? ❑ Yes ❑ No

If the answer is "yes," describe product, intended storage arrangement, and height.

_____

_____

Will there be any storage of plastic, rubber, or similar products over 5 ft (1.5 m) high except as described above?
❑ Yes ❑ No

If the answer is "yes," describe product, intended storage arrangement, and height.

_____

_____

Is there any special information concerning the water supply? ❑ Yes ❑ No

If the answer is "yes," provide the information, including known environmental conditions that might be responsible for corrosion, including microbiologically influenced corrosion (MIC).

_____

_____

I certify that I have knowledge of the intended use of the property and that the above information is correct.

Signature of owner's representative or agent: _____ Date: _____

Name of owner's representative or agent completing certificate (print): _____

Relationship and firm of agent (print): _____

© 2018 National Fire Protection Association NFPA 13 (p. 2 of 2)

FIGURE A.27.1(b) *Continued*

EDUFIRE.IR

27.1.1* Working plans shall be submitted for approval to the authority having jurisdiction before any equipment is installed or remodeled.

A.27.1.1 See Figure A.27.1.1.

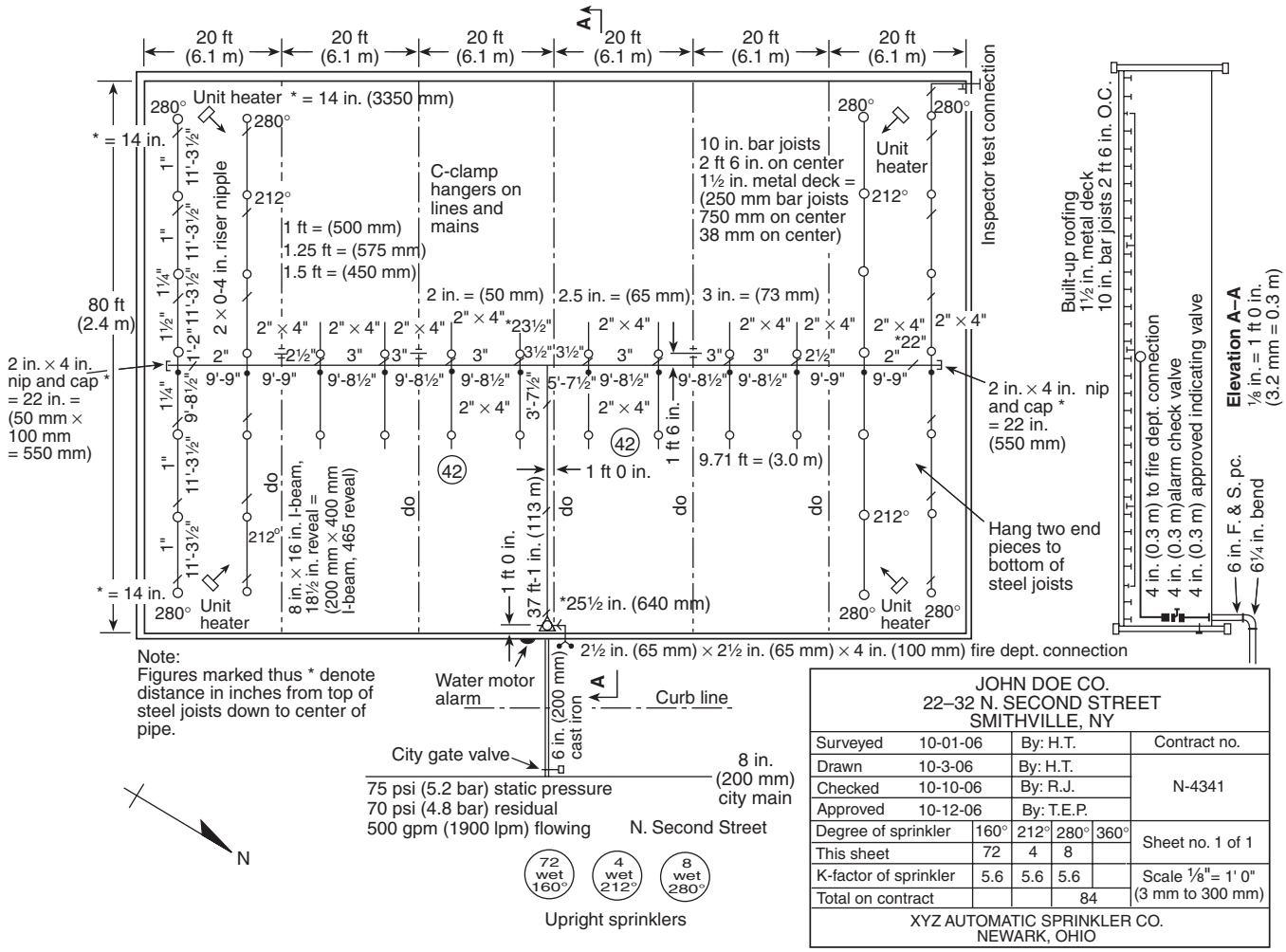

FIGURE A.27.1.1 *Typical Working Plans.*

27.1.1.1 Working plan submittals shall include the following:

(1) Working plans of the system(s), per 27.1.3
(2) Hydraulic calculations where systems are required to be calculated
(3) Data sheets for the system components where required by the authority having jurisdiction
(4)* Signed owner's certificate

Working plans, frequently called shop drawings, are developed to show how a sprinkler system is going to be installed. The person who develops the working plans usually starts with preliminary drawings and a set of specifications from a registered design professional and prepares the working plans to show how the sprinkler system will fit into the building and comply with the specifications as well as the provisions of NFPA 13.

A.27.1.1.1(4) It is the intent to provide the owner's certificate for all new systems and where there is a change of occupancy and/or building use.

EDUFIRE.IR

CLOSER LOOK [27.1.1]

Preparing Preliminary and Working Plans

A distinction is made in NFPA 13 and in the building construction community between "preliminary plans" and "working plans." Preliminary plans, which might or might not contain actual drawings of the sprinkler system, generally describe the judgment decisions regarding the hazard classification of the building and the adequacy of the water supply. Typically, the preliminary plans are prepared by a licensed fire protection engineer or other design professional as part of the conceptual phase of building construction and are submitted along with other construction documents in the application for a building permit. The purpose of preliminary plans is to ensure that basic information about the building and the structure is incorporated into the design of the sprinkler system. Additionally, the preparation and submission of preliminary plans to the authority having jurisdiction can allow for early verification of the key design concepts and discovery of areas of disagreement.

Working plans differ from preliminary plans in that they include the details of the project, such as the exact location of sprinklers and the equipment necessary for the operation of the sprinkler system. Also called "shop drawings" or "construction drawings," working plans include the layout and detail information, as well as the associated hydraulic calculations that show how the materials will be fabricated and installed. These documents typically are prepared in conformance with the concepts of the preliminary plans and are required to be submitted to the authority having jurisdiction for approval prior to system installation. Working plans are prepared primarily for the qualified workers who conduct the actual system installation and for those responsible for verifying that the sprinkler system complies with NFPA 13. They also generally reflect the necessary coordination with other trades. The plans serve to protect the interest of the owner, who usually is not knowledgeable about sprinkler systems and who usually relies on others to verify that the proposed sprinkler system is acceptable.

In preparing the preliminary plans, the registered design professional should take the concerns of the owner into account so that the sprinkler system meets the current and future needs of the owner's intended use of the space. To facilitate that objective, the owner's information certificate, which is shown in Figure A.27.1(b), is included in the standard. It is hoped that, in filling out this certificate, the owner or the owner's agent, who might be the design professional, will describe the intended use of the building, so that the preliminary plans and the working plans can be developed to meet the owner's needs.

Preliminary plans are also useful in assessing the adequacy of an available water supply system and in assessing whether the basis of the overall design is flawed. For example, in applying the recommendations of A.27.1(6), an out-of-date water test would indicate that more current information is needed for an accurate evaluation. The architect or registered design professional might specify a design approach based on an ordinary hazard (Group 2) occupancy classification for a rack storage operation in a proposed single-story building 35 ft (11 m) high. A more accurate approach would consider storage 30 ft to 34 ft (9.1 m to 10.4 m) high and the appropriate design criteria for the type of commodity in question. Although preliminary plans are not always submitted or required, they are helpful during the design process and can eliminate costly problems and delays later on.

Several parties usually conduct a review of the proposed working plans. These parties typically include the owner's representatives, such as the engineer or architect of record via the services of a licensed fire protection engineer, and the community's representatives, such as the fire department or building department. Representatives from the associated insurance companies most likely will also take part in the review process. Regardless of the type of building in which the system is installed, the success of the overall fire and life safety objectives depends on proper sprinkler system design and installation. Verification of compliance with NFPA 13 is critical.

Where the nature of a building's future tenants or their operations is uncertain during the building's design and construction stage, the difficulties associated with the verification process increase. Many of the installation criteria of NFPA 13 hinge on the determination of the building's occupancy hazard classification. This determination cannot be made without knowledge of the type of tenant and the tenant's intended operations. To address those concerns, some jurisdictions have implemented additional regulations that apply to buildings where tenant and operations information is unknown. One example of such a regulation might be to require such a building to be designed based on the criteria for an ordinary hazard (Group 2) occupancy. This approach provides a sprinkler system capable of protecting a range of hazards, and it allows the building owner some latitude in attracting prospective tenants. However, the limitations of this approach must also be acknowledged. Tenants with operations that present a greater hazard than those addressed by an ordinary hazard (Group 2) classification will be inadequately protected by the sprinkler system. The owner needs to be made aware of the specific limits of the sprinkler system design employed.

NFPA 25, *Standard for the Inspection, Testing, and Maintenance of Water-Based Fire Protection Systems,* requires the owner to retain the initial working plans, hydraulic calculations, and manufacturer's data sheets and specifications for the life of the building to facilitate the necessary inspection, testing, and maintenance activities for the installed system(s). Any future modifications or additions to the sprinkler system also become more workable.

EDUFIRE.IR

27.1.1.2 Submittals shall be permitted to be in electronic format when approved by the authority having jurisdiction.

27.1.1.3 A copy of the approved plans shall be given to the owner or owner's representative.

27.1.2 Deviation from approved plans shall require permission of the authority having jurisdiction.

27.1.3 Working plans shall be drawn to an indicated scale, on sheets of uniform size, with a plan of each floor, and shall show those items from the following list that pertain to the design of the system:

(1) Name of owner and occupant.
(2) Location, including street address.
(3) Point of compass.
(4) Full height cross section or schematic diagram, including structural member information if required for clarity and including ceiling construction and method of protection for nonmetallic piping.
(5) Ceiling/roof heights and slopes not shown in the full height cross section.
(6) Location of partitions.
(7) Location of fire walls.
(8) Occupancy class of each area or room.
(9) Location and size of concealed spaces, closets, attics, and bathrooms.
(10) Any small enclosures in which no sprinklers are to be installed.
(11) Size of city main in street and whether dead end or circulating; if dead end, direction and distance to nearest circulating main; and city main test results and system elevation relative to test hydrant.
(12) Other sources of water supply, with pressure or elevation.
(13) Make, type, model, and nominal K-factor of sprinklers, including sprinkler identification number.
(14) Temperature rating and location of high-temperature sprinklers.
(15) Total area protected by each system on each floor.
(16) Number of sprinklers on each riser per floor.
(17) Total number of sprinklers on each dry pipe system, preaction system, combined dry pipe–preaction system, or deluge system.
(18) Approximate capacity in gallons of each dry pipe system.
(19) Pipe type and schedule of wall thickness.
(20) Nominal pipe size and cutting lengths of pipe (or center-to-center dimensions). Where typical branch lines prevail, it shall be necessary to size only one typical line.
(21) Location and size of riser nipples.
(22) Type of fittings and joints and location of all welds and bends. The contractor shall specify on drawing any sections to be shop welded and the type of fittings or formations to be used.
(23) Type and locations of hangers, sleeves, braces, and methods of securing sprinklers when applicable.
(24) All control valves, check valves, drain pipes, and test connections.
(25) Make, type, model, and size of backflow prevention assembly, and means to forward flow test at system demand.
(26) Make, type, model, and size of alarm or dry pipe valve.
(27) Make, type, model, and size of preaction or deluge valve.
(28) Kind and location of alarm bells.

EDUFIRE.IR

(29) Size and location of standpipe risers, hose outlets, hand hose, monitor nozzles, and related equipment.
(30) Private fire service main sizes, lengths, locations, weights, materials, point of connection to city main; the sizes, types and locations of valves, valve indicators, regulators, meters, and valve pits; and the depth that the top of the pipe is laid below grade.
(31) Piping provisions for flushing.
(32) Where the equipment is to be installed as an addition to an existing system, enough of the existing system indicated on the plans to make all conditions clear.
(33) For hydraulically designed systems, the information on the hydraulic data nameplate.
(34) A graphic representation of the scale used on all plans.
(35) Name, address, and phone number(s) of contractor.
(36) Hydraulic reference points shown on the plan that correspond with comparable reference points on the hydraulic calculation sheets.
(37) The minimum rate of water application (density or flow or discharge pressure), the design area of water application, in-rack sprinkler demand, and the water required for hose streams both inside and outside.
(38) The total quantity of water and the pressure required noted at a common reference point for each system.
(39) Relative elevations of sprinklers, junction points, and supply or reference points.
(40) If room design method is used, all unprotected wall openings throughout the floor protected.
(41) Calculation of loads for sizing and details of sway bracing.
(42) Zones of influence used in calculations for seismic bracing indicated on plans.
(43) The setting for pressure-reducing valves.
(44) Information about listed antifreeze solution used (type and amount).
(45) Size and location of hydrants showing size and number of outlets and if outlets are to be equipped with independent gate valves. Whether hose houses and equipment are to be provided, and by whom, shall be indicated. Static and residual hydrants that were used in flow tests shall be shown.
(46) Size, location, and piping arrangement of fire department connections.
(47) Edition year of NFPA 13 to which the sprinkler system is designed.

The working plans must include enough information to confirm compliance with the provisions of NFPA 13. The 47 items listed in 27.1.3 outline the minimum information that must be provided to the authority having jurisdiction. Plan review officials might have developed their own plan checklists. But these 47 items will certainly be examined for every sprinkler system, so the person responsible for developing shop drawings must be sure to include all 47 items on the plans.

While NFPA 13 does not prescribe a methodology for performing the plan review, it is helpful to have a consistent approach to make this task more efficient and accurate. For a plan review methodology and sample plan review checklist, see the feature "Plan Review Checklist" at the end of this chapter for the perspective of an authority having jurisdiction on completing this critical task.

SEE ALSO

The "Plan Review Checklist" feature at the end of this chapter (pp. 1073–1078).

ASK THE AHJ

Why would the authority having jurisdiction need to see the level of detail required in item (4) of 27.1.3 on the plans, which includes full-height cross-sectional drawings?

The architect often does not provide cross-sectional drawings to the fire sprinkler system designer. Therefore, the fire sprinkler system designer also does not always provide this information in the fire sprinkler system plans. Cross-sectional drawings can provide valuable insight as to the presence of concealed spaces and whether the fire sprinkler system designer has addressed the requirement of 4.1.1 for sprinkler protection in all areas of the structure. Cross-sectional diagrams also assist in ensuring that the proposed distance that sprinklers will be positioned below the ceiling/roof is compliant.

EDUFIRE.IR

FAQ

Is the intent of item (23) of 27.1.3 that hanger locations be dimensioned?

Even though item (23) of 27.1.3 requires hanger locations to be indicated on the working plans, there is no intent to require that the locations be specifically dimensioned. Instead, sufficient information must be included on the working plans to determine that the rules of Chapter 17 have been met. In reality, typical hanger spacing notes and standard details will satisfy this requirement.

With regard to item (36) of 27.1.3, hydraulic reference points are important to both the designer and the plan reviewer because the points help ensure that all essential components of the system are included in the hydraulic calculations. Hydraulic reference points serve to provide coordination between the plans and the hydraulic calculations. The reference points are especially important for more hydraulically complex systems, such as those that are gridded.

Effective coordination between hydraulic calculations and plans is essential for system verification and where modifications or additions are proposed. The plan reviewer's job becomes more straightforward in this regard.

The information given in item (37) of 27.1.3 establishes the basis for the majority of the design options. If an incorrect discharge density, flow, or pressure is selected for the hazard, or if the area of system operation is not large enough or is incorrectly located for the occupancy being protected, the proposed system design is subject to rejection. For situations in which the minimum flow is given as the design criteria by NFPA 13 or the sprinkler listing, the density does not need to be calculated. Instead, the flow becomes the governing factor in performing the calculations. For situations where the pressure is given by NFPA 13 or the sprinkler listing, the flow can be calculated using the following equation:

$$Q = K\sqrt{P}$$

where:
Q = flow (gpm) (lpm)
K = constant associated with orifice size of the sprinkler
P = pressure from the listing (psi) (bar)

If reporting the density for these sprinklers is necessary, the flow can be divided by the largest area of coverage to determine the density.

The following information associated with the system demand must be shown on the plans:

1. Minimum rate of water application (density, flow, or design pressure, as applicable)
2. Design area of water application or number of calculated sprinklers, as applicable
3. In-rack sprinkler demand (number of calculated in-rack sprinklers with associated minimum design pressure or flow), if applicable
4. Inside hose demand, if applicable
5. Outside hose demand

The sum of the inside and outside hose demands must always be equal to or greater than the values given in Table 19.3.3.1.2 and Table 20.12.2.6.

With regard to item (38) of 27.1.3, the actual calculated demand is normally referenced at the base of the riser. However, calculations are required to include the underground piping all the way back to the effective point of the water test. With regard to item (25) of 27.1.3, the friction loss through the backflow preventer must be accounted for in the calculations. Because each model device has different friction loss characteristics, the model on the plans, the model on the calculations, and the model installed must be identical or equivalent in terms of associated friction loss characteristics. A change made during the construction phase could cause an inadequate sprinkler system discharge.

FAQ

Why are manufacturer's instructions required to be submitted?

Manufacturer's instructions frequently contain information about the use and limitations of a product that is not in NFPA 13 but that is critical to the installation of the sprinkler system plans and hydraulic calculations. Examples of specially listed equipment include specially listed sprinklers, for which the flows and pressures necessary to use them are not specifically discussed in NFPA 13, or specially listed fittings with equivalent lengths (hydraulic characteristics) that are not addressed in NFPA 13.

27.1.4 A signed copy of the owner's certificate and the working plan submittal shall include the manufacturer's installation instructions for any specially listed equipment, including descriptions, applications, and limitations for any sprinklers, devices, piping, or fittings.

Specially listed products frequently have additional rules and requirements regarding their use that are not contained in NFPA 13. Many times, these special rules contain limitations on the use of the product. It is important that a product be installed in conformance with its special listing and that the authority conducting the plan review be able to determine whether the proposed use of the product is consistent with such.

EDUFIRE.IR

CLOSER LOOK [27.1.4]

The Owner's Certificate and the Classification of Occupancies and Commodities

One of the critical first steps in the design/installation process is the selection of occupancy or commodity classification. If this classification is incorrect, all the decisions that follow will also be incorrect.

In some cases, this decision will have been made before the sprinkler contractor is involved. In most cases, however, fire sprinkler design/installation is a design/build function, and the contractor is responsible for establishing the design criteria. The owner's certificate required by Section 4.2 [see the sample certificate in Figure A.27.1(b)] is one of the best tools available to help determine sprinkler design and installation requirements.

All too often, the temptation is to look at the annex sections related to the occupancy classifications in 4.3.2 through 4.3.7 and the commodity classifications in Section 20.4, choose the first example, and assume the criteria will be acceptable. Although that approach might work in many cases, it is not the best way to determine such a critical decision. The designer and the contractor must ask enough questions and perhaps assist the owner in completing the owner's certificate by explaining the need for the questions. The questions asked at this stage of the process ensure that the system will be adequate for years to come and will not require expensive system upgrades when planned changes occur in the packaging, product, or storage arrangements.

The determination of occupancy and commodity will affect the allowable spacing and location of sprinklers as well as the types of sprinklers one might select for the proper level of protection prescribed by NFPA 13. This one issue alone could have a major effect on project pricing in both material and labor costs.

This decision also will dictate the design density, which in turn will affect the system pipe sizes, water supply needs, and size and capacity of fire pumps and water storage tanks where needed to meet system demands for pressure and volume. In situations where a system's water supply is provided by a public utility, the determination of occupancy and/or commodity could be the difference between needing to add a fire pump or water storage tank.

In NFPA 13, 27.1.4 requires that a signed copy of the owner's certificate be included with the submittal of working plans, which become a permanent record of the building and are intended to be retained by the owner for the life of the system. Doing so can protect the contractor's interests in years to come should there be confusion related to initial decisions.

Unfortunately, this process can sound easier than it is in practice due in part to the indirect relationship between the sprinkler contractor and the owner. The sprinkler contractor is a subcontractor working for a general contractor, who in turn has the direct relationship with the owner. For this reason, it is even more critical for the sprinkler contractor to start requesting information as early as possible in the project to make sure the owner understands the need for the questions and how the answers will affect design and installation criteria.

In some cases, the responses might conflict with the known issues at bid time. This is a great argument for the need to clearly identify who is responsible for determining design criteria or what assumptions were made at the time a proposal was submitted.

The goal is to provide a system designed to meet the minimum needs of the building and its use. To meet that objective, the contractor must ask questions and use the tools provided by NFPA 13, including the owner's certificate.

27.1.5* Working Plans for Automatic Sprinkler Systems with Non–Fire Protection Connections.

A.27.1.5 See Figure A.27.1.5(a) and Figure A.27.1.5(b).

Water typically is used in buildings for three purposes: plumbing, heating and air conditioning, and fire protection. Most of the time, the three systems are kept separate and are installed by different trades. From time to time, however, efficiencies can be had in combining two or more of these systems, resulting in what often are called "multipurpose" systems or "tri-water" systems. Where the fire protection system is combined with the plumbing or the heating and air conditioning, special consideration should be given to aspects of the design, including the waterflow alarms. To help differentiate portions of the system dedicated solely to the sprinkler system from those used for multiple purposes, 27.1.5 requires the use of different symbols in the plans.

EDUFIRE.IR

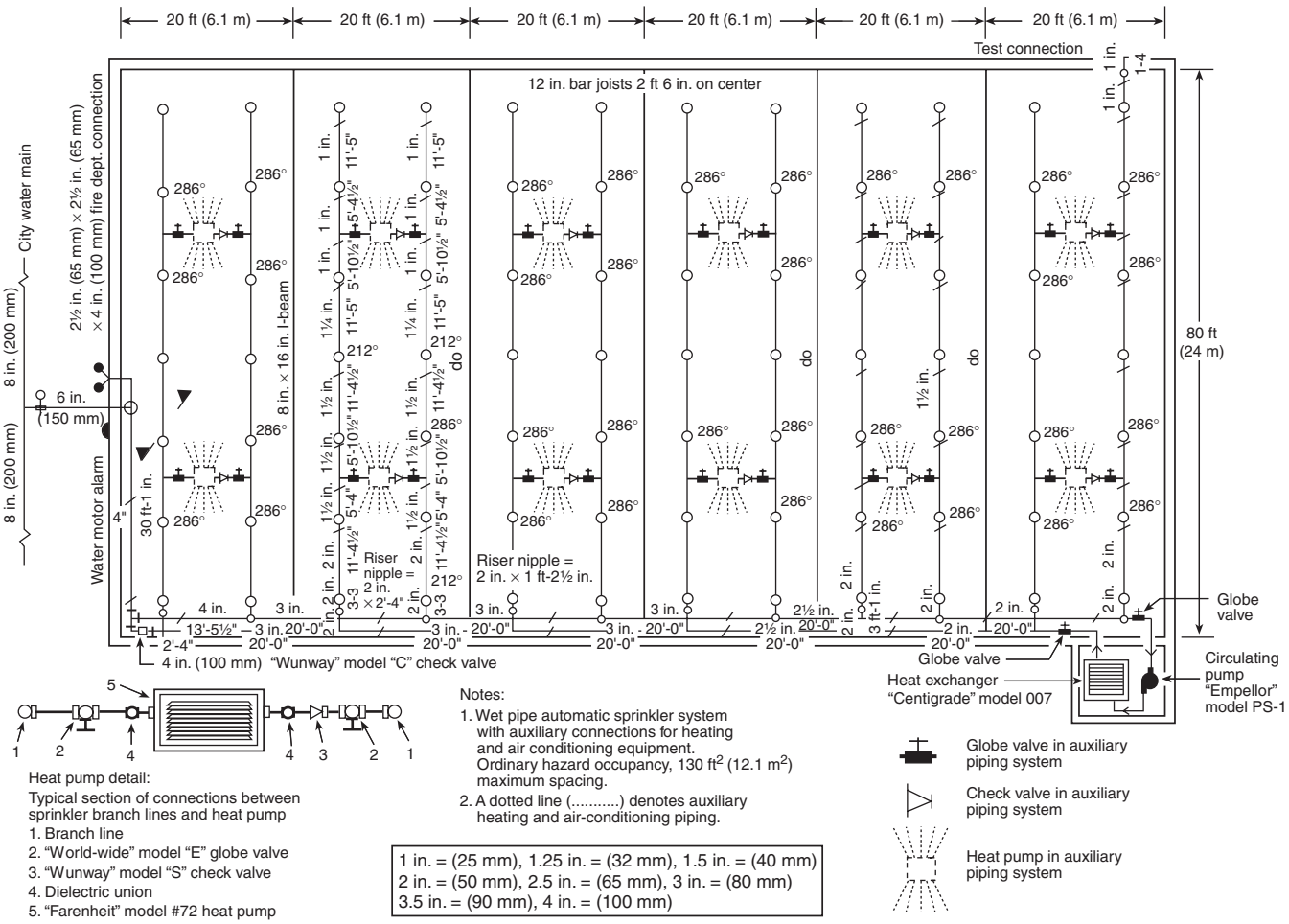

FIGURE A.27.1.5(a) *Working Plans for Circulating Closed-Loop Systems (Example 1).*

27.1.5.1 Special symbols shall be used and explained for auxiliary piping, pumps, heat exchangers, valves, strainers, and the like, clearly distinguishing these devices and piping runs from those of the sprinkler system.

27.1.5.2 Model number, type, and manufacturer's name shall be identified for each piece of auxiliary equipment.

FAQ [27.2.1]

Is the number of sprinklers that can be supplied by a given pipe size limited when the hydraulic calculation procedure is used?

The hydraulic calculation procedure, which is favored over the pipe schedule procedure, does not impose any limit on the number of sprinklers supplied by certain diameters of pipe. The determining factor for any such limit rests with the capacity of the water supply and the required flow rate for the number of operating sprinklers supported.

27.2 Hydraulic Calculation Procedures.

Section 27.2 covers the procedures for hydraulic calculations. Systems that used the pipe schedule method for determining pipe sizes are not required to follow Section 27.2, but they will need to use the tables in Section 27.5 to ensure that the pipe sizes are appropriate. The required format and documentation for hydraulic calculations are contained in Section 27.4.

27.2.1* General.

A.27.2.1 When additional sprinkler piping is added to an existing system, the existing piping does not have to be increased in size to compensate for the additional sprinklers, provided the

EDUFIRE.IR

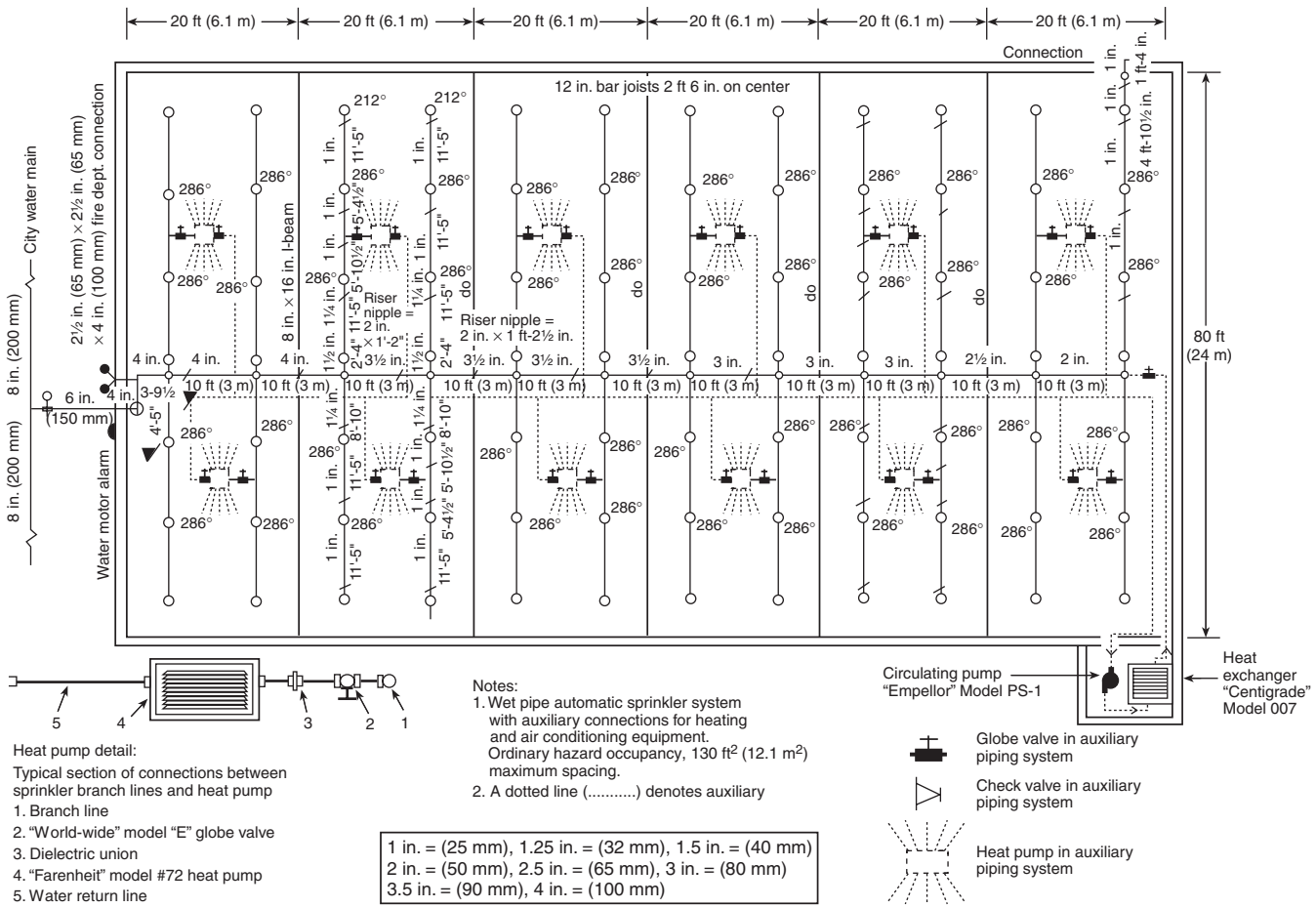

FIGURE A.27.1.5(b) *Working Plans for Circulating Closed-Loop Systems (Example 2).*

new work is calculated and the calculations include that portion of the existing system that can be required to carry water to the new work.

Under no circumstances should a new pipe schedule system be connected to or supplied from an existing hydraulically designed system (see Section 27.5). Extending an existing pipe schedule system with a new hydraulically designed system can be acceptable in some cases in which a careful analysis of the resultant hybrid system has been done. Such an analysis might need to include shifting the remote area design to include a part of the existing pipe schedule design.

It should be noted that ¾ in. (20 mm) nonmetallic piping and copper tube are currently listed and are acceptable. Additionally, NFPA 13D, *Standard for the Installation of Sprinkler Systems in One- and Two-Family Dwellings and Manufactured Homes,* permits the use of ½ in. (15 mm) nonmetallic pipe if specific criteria are followed.

NFPA 13 permits the use of ¾ in. (20 mm) and ½ in. (15 mm) pipe for a maximum length of 4 in. (100 mm) when an existing system is being revamped and ¾ in. (20 mm) or ½ in. (15 mm) outlets used to feed sprinklers. This allowance is a practical necessity where sprinklers need to be moved or where ceilings are installed under upright sprinklers. Rather than having to break the system apart to put in a new fitting at the location of the new sprinkler, the small-diameter pipe matching the thread of the fitting can be used to supply an armover to the new sprinkler. See Sections 29.4 and 29.5 for more details.

It is important to note that the inclusion of such short sections of small-diameter pipe can result in significant pressure loss and must be accounted for in the hydraulic calculations for the system. A number

EDUFIRE.IR

of sprinkler systems that use ¾ in. (20 mm) steel pipe are still in service, and NFPA 13 does not require replacement of all such pipe. If, during a routine internal pipe investigation required by NFPA 25, the smaller-diameter pipe appears blocked, the obstruction needs to be cleared, or the pipe needs to be replaced.

The provisions of NFPA 13 do not provide any specific velocity limits. The impact of high water velocities tends to be self-correcting. When the velocity of water in a pipe is high, the pressure loss in the pipe is also high. If the pressure loss is too high, the pipe size will need to be increased to reduce the pressure loss, and the velocity will correspondingly decrease. Additional information on the impact of water velocity can be found in the American Fire Sprinkler Association report, "Water Velocity: Its Impact on the Accuracy of Hydraulic Calculations."

27.2.1.1 A calculated system for a building, or a calculated addition to a system in an existing sprinklered building, shall supersede the rules in this standard governing pipe schedules, except that all systems shall continue to be limited by area.

27.2.1.2 Pipe sizes shall be no less than 1 in. (25 mm) nominal for black or galvanized steel piping and ¾ in. (20 mm) nominal for copper tubing or brass, stainless steel, or nonmetallic piping listed for fire sprinkler service unless permitted by Sections 29.4 and 29.5.

27.2.1.3 The size of pipe, number of sprinklers per branch line, and number of branch lines per cross main shall otherwise be limited only by the available water supply.

27.2.1.4* Unless required by other NFPA standards, the velocity of water flow shall not be limited when hydraulic calculations are performed using the Hazen–Williams or Darcy Weisbach formulas.

FAQ [A.27.2.1.4]

Does NFPA 13 limit water velocity in any of the pipes?

The provisions of 27.2.1.4 and its associated Annex A material do not mandate a specific velocity limit for the use of either the Hazen-Williams or the Darcy Weisbach calculation method; however, open reference is made to other NFPA standards that might apply. Systems designed in accordance with other NFPA standards that include velocity limits must abide by additional restrictions contained therein.

A.27.2.1.4 NFPA 13 does not provide a specific velocity limitation for the use of the Hazen-Williams formula. This is, in part, due to an expectation that excessive friction loss values will result in increasing pipe sizes, thereby serving as an inherent limit on velocity. However, the fact that NFPA 13 does not provide a specific limit should not be taken as an endorsement that the formula can be used for any velocity of water flow. The formula was empirically determined using "normal" conditions. When the velocity in the pipe exceeds that which was used to determine the formula, the formula might no longer be valid. There has been some research performed (Huggins 1996) in which results using the Hazen-Williams formula and the Darcy-Weisbach formula were compared, and the conclusion was that a specific velocity limit applied to all pipe sizes is not appropriate.

27.2.1.5 However, sprinkler spacing and all other rules covered in this and other applicable standards shall be observed.

27.2.1.6 Hydraulic calculations shall extend to the effective point of the water supply where the characteristics of the water supply are known.

27.2.2 Formulas.

27.2.2.1 Friction Loss Formula.

27.2.2.1.1 Pipe friction losses shall be determined on the basis of the Hazen–Williams formula, as follows:

$$p = \frac{4.52Q^{1.85}}{C^{1.85}d^{4.87}} \qquad \textbf{[27.2.2.1.1]}$$

where:

p = frictional resistance (psi/ft of pipe)
Q = flow (gpm)
C = friction loss coefficient
d = actual internal diameter of pipe (in.)

EDUFIRE.IR

CLOSER LOOK [27.2.2.1]

Understanding the Hazen-Williams Formula

The Hazen-Williams formula is the most common of the empirical formulas used to determine relationships among flow, friction loss, and available pressure for the design of a sprinkler system (see 27.2.2.1). The formula was developed at the beginning of the 20th century by Allen Hazen, a civil engineer, and Gardner Stewart Williams, a professor of civil engineering at the University of Michigan. The Hazen-Williams formula is an empirical relationship developed by observation of the resultant pressure loss across a known length of a select number of pipe types and sizes using a select number of water flow rates, making its confirmed accuracy somewhat limited to those conditions of flow similar to that observed. A different method of calculating friction loss, known as the Darcy-Weisbach equation, can provide a more precise method for establishing these relationships, but due to its complexity it is not commonly used for calculating friction loss of water at room temperature in fire protection systems. The Darcy-Weisbach equation more accurately accounts for the effects of turbulence, temperature, and viscosity. See the commentary following 27.2.2.1.3 for more information on the use of the Darcy-Weisbach equation with antifreeze solutions.

The Hazen-Williams formula depends on the relationship of the pipe type (the *C* factor) with the pipe diameter and the flow through the pipe. The *C* factor describes the relative roughness of the pipe interior and is similar to the epsilon factor used in the Darcy-Weisbach calculation technique. Standardized *C* factors for various pipe types are shown in Table 27.2.4.8.1. These *C* factors represent aged pipe and not the smooth new pipe used in an original installation. By forcing the use of aged pipe, NFPA 13 includes a safety factor that accounts for expected corrosion.

As stated, NFPA 13 does not stipulate a maximum limit on water velocities in piping; however, some insurance companies incorporate such limits. The definition for the Darcy-Weisbach method contained in FM Data Sheet 2-0, *Installation Guidelines for Automatic Sprinklers,* includes a recommended velocity limit of 30 ft/sec (9.1 m/sec) for the use of the Hazen-Williams formula, suggesting the use of the Darcy-Weisbach equation at higher velocities. Other mechanical piping standards impose limits on water velocity because of concerns over noise and pipe erosion. Such concerns are not relevant in fire protection pipe systems, because water is not normally flowing through them. Automatic sprinkler systems operate only during a fire or during testing.

NFPA 13 does not require calculations to be performed by hand. Friction loss tables or internal hydraulic calculations that are part of a software program are usually used to establish the friction loss. Such tables and programs provide a set of accurate friction loss values for a combination of pipe types and flows, all of which are based on the Hazen-Williams formula.

27.2.2.1.2 For SI units, the following equation shall be used:

$$p_m = 6.05\left(\frac{Q_m^{1.85}}{C^{1.85}d_m^{4.87}}\right)10^5 \qquad \textbf{[27.2.2.1.2]}$$

where:

p_m = frictional resistance (bar/m of pipe)
Q_m = flow (L/min)
C = friction loss coefficient
d_m = actual internal diameter (mm)

Starting with the 2007 edition, NFPA 13 requires large antifreeze systems to be calculated using the Darcy-Weisbach formula, rather than the Hazen-Williams formula with which most people in the sprinkler industry are familiar.

NFPA 13 does not require the use of the Darcy-Weisbach method of calculating friction loss for water-only systems because the density and viscosity of water do not change significantly over the range of temperatures where water is used for fire protection, and the effect of turbulence is extremely minor. However, where antifreeze solutions are used in cold spaces, the viscosity and density of the antifreeze can change significantly, and the use of the Hazen-Williams formula alone would seriously underpredict the pressure necessary to push the antifreeze out of the pipe.

Additionally, the provisions of both NFPA 11, *Standard for Low-, Medium-, and High-Expansion Foam,* and NFPA 16, *Standard for the Installation of Foam-Water Sprinkler and Foam-Water Spray Systems,* require the use of the Darcy-Weisbach formula for the calculation of friction loss in piping carrying foam concentrate. It should be noted that the use of the Darcy-Weisbach formula is suitable only for Newtonian fluids. Some alcohol resistant foam concentrates are non-Newtonian fluids and require other special consideration.

EDUFIRE.IR

SEE ALSO

The "Darcy-Weisbach Calculations" feature at the end of this chapter (pp. 1079–1086).

For small antifreeze systems, the water is expected to be able to push the antifreeze out of the pipe without the need for additional calculations. However, for large antifreeze systems, there is concern that it would be difficult for water to push a large quantity of antifreeze at a low temperature, a low viscosity, and a high density out of a sprinkler. The Technical Committee on Sprinkler System Discharge Criteria chose to require the calculation of the pressure necessary to push the solution out of the sprinklers (friction loss) for systems larger than 40 gal (150 L). While this size system is somewhat arbitrary, the 40 gal (150 L) size has been the traditional dividing line between small and large antifreeze systems.

The Darcy-Weisbach formula looks fairly straightforward. With only five variables, however, it is difficult to find the value for the friction factor, *f*. The formulas for *f* can be quite complicated, even with the use of computers, so a diagram — called the Moody diagram and shown in Figure A.27.2.4.8.2 — is used to find the friction factor.

FAQ [27.2.2.1.3]

Why does NFPA 13 require the use of the Darcy-Weisbach formula?

The Darcy-Weisbach formula is more precise than the Hazen-Williams formula at predicting friction loss, because it takes into account the turbulence of the fluid as well as the effect of different densities and viscosities that occur at various temperatures.

27.2.2.1.3 For antifreeze systems greater than 40 gal (150 L) in size, the friction loss shall also be calculated using the Darcy–Weisbach formula:

$$\Delta P = 0.000216\, f \frac{l \rho Q^2}{d^5} \qquad \textbf{[27.2.2.1.3]}$$

where:

ΔP = friction loss (psi)
f = friction loss factor from Moody diagram
l = length of pipe or tube (ft)
ρ = density of fluid (lb/ft^3)
Q = flow in pipe or tube (gpm)
d = inside diameter of tube (in.)

27.2.2.2 Velocity Pressure Formula. Velocity pressure shall be determined on the basis of the following formula:

$$P_v = \frac{0.001123 Q^2}{D^4} \qquad \textbf{[27.2.2.2]}$$

where:

P_v = velocity pressure (psi) (SI, 1 psi = 0.0689 bar)
Q = flow (gpm) (SI, 1 gal = 3.785 L)
D = inside diameter (in.) (SI, 1 in. = 25.4 mm)

The velocity pressure is the amount of energy associated with the velocity of the water in a pipe. The velocity pressure always acts in the direction of waterflow. As a result, velocity pressure will not act to cause discharge of water from an operating sprinkler where the water velocity passes through the piping past the open sprinkler. There are certain circumstances where hydraulic calculations might be required to account for this phenomenon. For example, NFPA 15, *Standard for Water Spray Fixed Systems for Fire Protection,* requires hydraulic calculations in a number of situations. The basic formula for velocity pressure is as follows:

$$P_v = \left(\frac{V^2}{2g}\right) 0.433 \text{ psi/ft}$$

where:

P_v = velocity pressure (psi)
V = velocity (ft/sec)
g = 32.2 ft/sec^2 (gravitational constant of the earth)

By substituting *Q/A* for *V* in the velocity pressure formula and using proper units of conversion, the more usable formula that appears in the text is found. Using this approach, *Q* is the volumetric flow rate (ft^3/sec), and *A* is the cross-sectional area (ft^2) of the pipe.

EDUFIRE.IR

For SI units, use the following equation:

$$P_v = \frac{V^2}{2g} 9.81$$

where:
P_v = velocity pressure (bar)
V = velocity (m/s)
g = 9.8 m/s

27.2.2.3 Normal Pressure Formula. Normal pressure (P_n) shall be determined on the basis of the following formula:

$$P_n = P_t - P_v \qquad \textbf{[27.2.2.3]}$$

where:
P_n = normal pressure
P_t = total pressure [psi (bar)]
P_v = velocity pressure [psi (bar)]

The normal pressure acts in all directions and includes the pressure acting against, or perpendicular to, the pipe wall. This pressure acts to cause the flow of water from operated sprinklers attached to the side of the piping. When no flow occurs, the velocity pressure is zero, and the normal pressure is equal to the total pressure. See parts (a) and (b) of Exhibit 27.1, which illustrate normal and velocity pressures when water flows through a pipe. Where all the flow through the piping is directed to discharge from the operating sprinkler, both the velocity pressure and the normal pressure combine to cause flow from the operating sprinkler. This condition is illustrated at the end of a branch line as shown in part (c). Part (d) of the exhibit shows where flow from a gridded branch line from opposing directions combines to discharge from an operating sprinkler.

SEE ALSO

The "Velocity Pressure Calculations" feature at the end of this chapter (pp. 1087–1099).

EXHIBIT 27.1 Normal and Velocity Pressures.

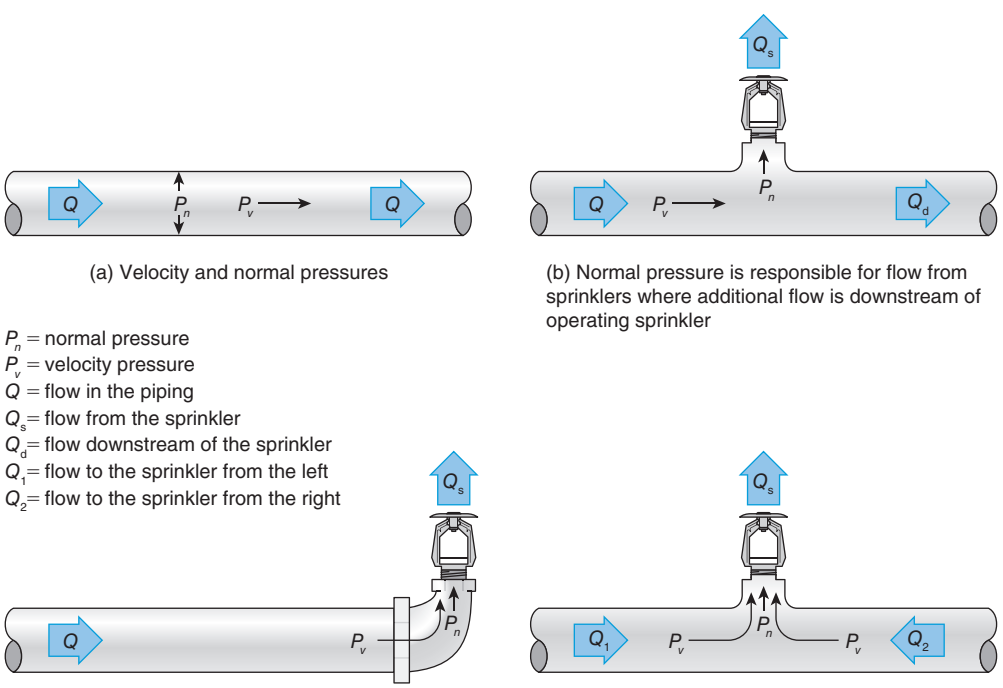

(a) Velocity and normal pressures

(b) Normal pressure is responsible for flow from sprinklers where additional flow is downstream of operating sprinkler

P_n = normal pressure
P_v = velocity pressure
Q = flow in the piping
Q_s = flow from the sprinkler
Q_d = flow downstream of the sprinkler
Q_1 = flow to the sprinkler from the left
Q_2 = flow to the sprinkler from the right

(c) Both normal and velocity pressure are responsible for flow from sprinklers at the end of a line

(d) Both normal and velocity pressure are responsible for flow from sprinklers where flow enters the sprinkler from both directions in gridded piping

EDUFIRE.IR

SEE ALSO

The "Hardy-Cross Method" feature (pp. 1101–1105) and the "Simple Loop Calculations" feature (pp. 1106–1107) at the end of this chapter.

27.2.2.4 Hydraulic Junction Points.

27.2.2.4.1 Pressures at hydraulic junction points shall balance within 0.5 psi (0.03 bar).

Hydraulic calculations for loops and grids must be done using an iterative technique, known as the Hardy-Cross method, in which an assumption is made and then a series of calculations is made to test the assumption. If the calculated value is the same as the assumed value, the assumption is correct. Due to the number of significant digits used in the calculations and the method of rounding, getting exactly the same number between the assumed value and the calculated value is not always possible. Therefore, a value needed to be selected to let the user know how close is close enough to continue with the calculations.

The value of 0.5 psi (0.03 bar) was selected because it provides a reasonable degree of accuracy for balancing at hydraulic junction points. Most computer programs can easily obtain this value without an excessive number of iterations. By requiring a reasonable balance at the hydraulic junction points, the designer is assured that an excess system demand is not somehow concealed in the calculations. Many software programs can carry the balance to four significant digits. The use of four significant digits does not necessarily mean that the design is better but, rather, that the computer can perform a faster calculation with more significant digits to the right of the decimal point.

27.2.2.4.2 The highest pressure at the junction point, and the total flows as adjusted, shall be carried into the calculations.

27.2.2.4.3 Pressure balancing shall be permitted through the use of a K-factor developed for branch lines or portions of systems using the formula in 27.2.2.5.

Pressure balancing is the act of adjusting demand flows when calculations for different portions of the system require different pressures at the same point. Since there can be only one pressure at any point, the highest pressure of all the demands must be provided. Once the higher pressure is provided, greater flows than necessary will go to the other portions of the system. The balancing procedure calculates and accounts for those higher flows.

The formula shown in 27.2.2.5 is a simplification of the true physics involved. A more accurate K-factor for the portion of the system can be determined without respect to the elevation changes in the system. The allowance for the use of an equivalent K-factor for a connected series of pipe and sprinklers is generally based the fact that both the flow rate from the operating sprinklers and the friction loss through the piping are related to some constant times the square root of the pressure. The flow rate through an open sprinkler at an operating pressure is dictated by the formula $Q = K\sqrt{P}$ or $Q=KP^{0.5}$. The flow rate through a segment of piping is directly related to the amount of friction loss through the piping segment. The friction loss in a segment of piping based on the Hazen-Williams formula is as follows:

$$P = L\left[\frac{4.52Q^{1.85}}{C^{1.85}d^{4.87}}\right]$$

Rearranging this formula to solve for the flow rate Q gives

$$Q = \left[\frac{C^{1.85}d^{4.87}}{4.52L}\right]^{0.54} \times P^{0.54}$$

where the bracketed portion of the equation is a constant for a particular pipe segment. This reduces the equation to $Q = K_p P^{0.54}$. In the reduced equation, raising the pressure, P, to a power function of 0.54 is roughly equal to that of 0.5, a square root, making the use of an approximation for an equivalent K based on $Q = K\sqrt{P}$ reasonably close. It should be noted that the inclusion of significant elevation changes in the piping segments for which an equivalent K is being calculated might not be appropriate since the effect of elevation change is based on the linear function $P_e = 0.433H$, which is not related to the flow rate through the piping segment.

Where branch lines, drops, or sprigs include significant elevation changes and multiple flowing sprinklers and varying elevations, consideration for the use of an alternative means of calculation might be appropriate. However, such a calculation technique can be difficult to perform by hand, so the simplified formula is permitted but should be used with care. Many of the computer programs on the market

EDUFIRE.IR

CLOSER LOOK [27.2.2.3]

Total Pressure Method versus Velocity Pressure Method

NFPA 13 permits the user to choose between two methods of hydraulic calculations — the total pressure method and the velocity pressure method. The term *velocity pressure method* is something of a misnomer because this calculation method uses the normal pressure at a sprinkler to calculate the resultant flow from that sprinkler. As such, it might be better called the *normal pressure method* of calculation. To find the normal pressure, the velocity pressure must first be determined and subtracted from the total pressure, which yields the normal pressure. Because this calculation method forces the user to find the velocity pressure in order to eliminate its effect on the prediction of flow from an orifice, it has become known as the velocity pressure method of calculation.

Hydraulic calculations of sprinkler systems using the total pressure method (P_t) are the most common. Use of the total pressure method simplifies the calculations and, in most cases, builds an additional safety factor into the hydraulic calculations, because the assumption is that the total pressure is responsible for pushing the water out of the pipe through every operating sprinkler. This assumption is somewhat conservative because only the normal pressure is really responsible for pushing the water out of the pipe at almost all the operating sprinklers. Except for the sprinkler at the end of a branch line with one-way flow or at a point of converging flow on a branch line having flow from both directions, the normal pressure is always less than the total pressure. By using a higher pressure to calculate the operating sprinkler flow, the demand is overestimated, thereby creating a safety factor.

With the velocity pressure method of calculation, the normal pressure is used to calculate the flow from the operating sprinkler, except at the last sprinkler on the end of a branch line or a point of converging flow with no flow past the sprinkler. In those two locations, the total pressure should be used to calculate the discharge, because the velocity pressure and the normal pressure will be acting in the direction of the flowing sprinkler, adding up to the total pressure. With the velocity pressure method of calculation, the user must be careful that all the sprinklers have sufficient flow. It is possible that the reduced normal pressure at an operating sprinkler might not provide sufficient drive to support the minimum flow required for that sprinkler and must be confirmed. Due to the additional safety factors built into the total pressure method of calculation, no additional considerations generally are required with this calculation method for fire sprinkler systems.

NFPA 15 requires the use of the velocity pressure method of hydraulic calculation in many situations because of the possibility of long runs of small-diameter pipe to the end nozzle and because it is common for large flow demands to discharge from the side of a tee in a water spray system. The long runs of small-diameter pipe can cause a disparity between the flow predicted by the total pressure method and the flow predicted by the normal pressure method that is greater than what is acceptable. Because sprinkler systems generally do not have long runs of small-diameter pipe that extend to the end sprinkler and because fire sprinkler systems rarely have large flows coming from the side of a tee, these concerns are not shared by the Technical Committee on Sprinkler System Discharge Criteria. Therefore, the velocity pressure method is not mandated.

See the commentary following 27.2.4.10.1 and 27.2.4.10.2 for more information on the effect of velocity pressure and normal pressure on the discharge from an open sprinkler.

perform this balancing feature using the more precise method and discounting the elevation changes in establishing a K-factor. Because of the balancing feature, such computer programs produce more accurate results than hand calculations.

27.2.2.5 K-Factor Formula. K-factors, flow from an orifice, or pressure from an orifice shall be determined on the basis of the following formula:

$$K_n = \frac{Q}{\sqrt{P}} \qquad [27.2.2.5]$$

where:

K_n = equivalent K at a node
Q = flow at the node
P = pressure at the node

SEE ALSO

The "Flow Through Orifices" feature at the end of this chapter (p. 1100).

EDUFIRE.IR

27.2.3 Equivalent Pipe Lengths of Valves and Fittings.

27.2.3.1 Pipe and Fittings.

27.2.3.1.1 Table 27.2.3.1.1 shall be used to determine the equivalent length of pipe for fittings and devices unless manufacturer's test data indicate that other factors are appropriate.

Values for ½ in. (15 mm) and ¾ in. (20 mm) steel pipe appear in Table 27.2.3.1.1 because, when hydraulic and pipe schedule systems are redesigned or modified, Sections 29.4 and 29.5 permit the use, under certain conditions, of pipe nipples up to 4 in. (100 mm) in length with a pipe diameter smaller than 1 in. (25 mm). Additionally, some older systems might include ¾ in. (20 mm) steel piping, as was allowed under some older editions of NFPA 13. Those situations are the only ones in which steel pipe smaller than 1 in. (25 mm) can be used in a sprinkler system.

The fitting and valve losses shown in Table 27.2.3.1.1 are experimentally derived values that, for convenience, have been rounded to a whole number. The exception is the swing check valve, in which several makes of valves were averaged to produce the numbers in the table. Where possible, the designer should use the friction loss value for the specific check valve that is to be installed. This information can usually be obtained from the manufacturer.

Where valves or fittings that are not shown in Table 27.2.3.1.1 are used in the system, the user must account for the friction loss by obtaining the equivalent length from the manufacturer or by obtaining the actual friction loss at the specific flow. The equivalent length/friction loss needs to be included in the calculations.

Extension fittings utilized in accordance with 16.8.6 that are greater than 2 in. (50 mm) in length are required to be listed for such use and must be included in the hydraulic calculations. See 27.2.3.5 and associated commentary for additional discussion. Where extension fittings are used as permitted by 16.8.6 and are not greater than 2 in. (50 mm) in length, they are not required to be included in the hydraulic calculations. In either case such extension fittings are permitted only with sprinklers K-8.0 or smaller and for protecting light or ordinary hazard occupancies.

Table 27.2.3.1.1 is valid only for Schedule 40 steel pipe with a *C* factor of 120. For other types of pipe or other *C* factor values, the equivalent length from Table 27.2.3.1.1 must be modified. For pipes with a *C* factor other than 120, the modifier can be found in Table 27.2.3.2.1. For pipes with internal diameters other than Schedule 40 steel, the modifiers can be calculated using the formula shown in 27.2.3.1.3.1. For situations in which the pipe size and the *C* factor are different from those for Schedule 40 steel, both correction factors must be applied.

For example, fittings for 4 in. (100 mm) Schedule 10 steel pipe being used in a dry pipe sprinkler system with a *C* factor of 100 would have to apply a correction factor of 0.713 (from Table 27.2.3.2.1) and another correction factor of 1.32 (calculated from the equation in 27.2.3.1.3.1). Multiplying those two correction factors equals the combined factor of 0.94 (1.32 × 0.713 = 0.94). Therefore, to use the equivalent lengths in Table 27.2.3.1.1 for 4 in. (100 mm) Schedule 10 steel pipe in a system with a *C* factor of 100, the values in the table must be multiplied by 0.94. That would make the equivalent length of a 90-degree standard elbow 9.4 ft (2.87 m) instead of 10 ft (3.0 m).

27.2.3.1.2 For saddle-type fittings having friction loss greater than that shown in Table 27.2.3.1.1, the increased friction loss shall be included in hydraulic calculations.

Some specially listed 1 in. (25 mm) saddle-type fittings have a friction loss equivalent to 21 ft (6.4 m) of pipe, as opposed to the 5 ft (1.5 m) shown in Table 27.2.3.1.1. This difference in friction loss is another case in which the listing information for a given product is of utmost importance. Ignoring the increased loss would introduce an appreciable error into the calculations.

27.2.3.1.3 Equivalent Length Modifier.

27.2.3.1.3.1 For internal pipe diameters different from Schedule 40 steel pipe [Schedule 30 for pipe diameters 8 in. (200 mm) and larger], the equivalent length shown in Table 27.2.3.1.1 shall be multiplied by a factor derived from the following formula:

$$\left(\frac{\text{Actual inside diameter}}{\text{Schedule 40 steel pipe inside diameteer}}\right)^{4.87} = \text{Factor} \qquad \textbf{[27.2.3.1.3.1]}$$

EDUFIRE.IR

TABLE 27.2.3.1.1 *Equivalent Schedule 40 Steel Pipe Length Chart*

	Fittings and Valves Expressed in Equivalent Feet (Meters) of Pipe														
Fittings and Valves	*½ in. (15 mm)*	*¾ in. (20 mm)*	*1 in. (25 mm)*	*1¼ in. (32 mm)*	*1½ in. (40 mm)*	*2 in. (50 mm)*	*2½ in. (65 mm)*	*3 in. (80 mm)*	*3½ in. (90 mm)*	*4 in. (100 mm)*	*5 in. (125 mm)*	*6 in. (150 mm)*	*8 in. (200 mm)*	*10 in. (250 mm)*	*12 in. (300 mm)*
45° elbow	—	1 (0.3)	1 (0.3)	1 (0.3)	2 (0.6)	2 (0.6)	3 (0.9)	3 (0.9)	3 (0.9)	4 (1.2)	5 (1.5)	7 (2.1)	9 (2.7)	11 (3.3)	13 (4)
90° standard elbow	1 (0.3)	2 (0.6)	2 (0.6)	3 (0.9)	4 (1.2)	5 (1.5)	6 (1.8)	7 (2.1)	8 (2.4)	10 (3)	12 (3.7)	14 (4.3)	18 (5.5)	22 (6.7)	27 (8.2)
90° long-turn elbow	0.5 (0.2)	1 (0.3)	2 (0.6)	2 (0.6)	2 (0.6)	3 (0.9)	4 (1.2)	5 (1.5)	5 (1.5)	6 (1.8)	8 (2.4)	9 (2.7)	13 (4)	16 (4.9)	18 (5.5)
Tee or cross (flow turned 90°)	3 (0.9)	4 (1.2)	5 (1.5)	6 (1.8)	8 (2.4)	10 (3)	12 (3.7)	15 (4.6)	17 (5.2)	20 (6.1)	25 (7.6)	30 (9.1)	35 (10.7)	50 (15.2)	60 (18.3)
Butterfly valve	—	—	—	—	—	6 (1.8)	7 (2.1)	10 (3)	—	12 (3.7)	9 (2.7)	10 (3)	12 (3.7)	19 (5.8)	21 (6.4)
Gate valve	—	—	—	—	—	1 (0.3)	1 (0.3)	1 (0.3)	1 (0.3)	2 (0.6)	2 (0.6)	3 (0.9)	4 (1.2)	5 (1.5)	6 (1.8)
Vane type flow switch			6 (1.8)	9 (2.7)	10 (3)	14 (4.3)	17 (5.2)	22 (6.7)	—	30 (9.1)	—	16 (4.9)	22 (6.7)	29 (8.8)	36 (11)
Swing check*	—	—	5 (1.5)	7 (2.1)	9 (2.7)	11 (3.3)	14 (4.3)	16 (4.9)	19 (5.8)	22 (6.7)	27 (8.2)	32 (10)	45 (14)	55 (17)	65 (20)

Note: Information on ½ in. pipe is included in this table only because it is allowed under Sections 29.4 and 29.5.

*Due to the variation in design of swing check valves, the pipe equivalents indicated in this table are considered average.

To further increase the accuracy of the equivalent pipe length in Table 27.2.3.1.1, the modification formula shown in 27.2.3.1.3.1 is intended to account for the difference in the internal diameter between Schedule 40 pipe and other pipe. The modifier calculated by the formula in 27.2.3.1.3.1 must be applied to the equivalent length of the pipe given in Table 27.2.3.1.1, because the pipe assumed by Table 27.2.3.1.1 has the internal diameter of Schedule 40 steel pipe. The pressure loss within a fitting is primarily associated with the energy required to cause a change in direction or turbulence loss of the flowing water through the fitting and is constant at a given water flow rate. Use of pipes with a different internal diameter will have different friction loss characteristics and will require a different length of pipe to achieve the same friction loss through the fitting.

An example of differing friction loss is the friction loss through a 2 in. (50 mm), 90-degree standard-turn elbow connected to a piece of Schedule 40 steel pipe with a flow of water in the pipe of 100 gpm (379 L/min). The equivalent length of pipe describing that friction loss is then compared to the equivalent length for the same elbow when it is connected to a piece of Schedule 10 steel pipe. When the elbow is connected to the Schedule 40 steel pipe, Table 27.2.3.1.1 indicates that the friction loss has an equivalent length of 5 ft (1.5 m) of Schedule 40 pipe. With a flow of 100 gpm (379 L/min) in the pipe, the friction loss would be 0.5 psi (0.03 bar) through the elbow (using the Hazen-Williams formula). When the elbow is attached to the Schedule 10 steel pipe, the friction loss through the elbow will still be 0.5 psi (0.03 bar), but it will require a different length of pipe to equal a friction loss of 0.5 psi (0.03 bar). The formula in 27.2.3.1.3.1 allows the calculation of a correction factor that will produce the correct length of different pipe. In this example, the internal diameter of 2 in. (50 mm) Schedule 10 pipe is 2.157 in. (54.8 mm), while the internal diameter of 2 in. (50 mm) Schedule 40 pipe is 2.067 in. (52.5 mm). Using those diameters, the correction factor can be calculated as follows:

$$\left(\frac{2.157}{2.067}\right)^{4.87} = 1.23$$

The correction factor of 1.23 is then multiplied by the 5 ft (1.5 m) value obtained from Table 27.2.3.1.1 for an equivalent length of 6.15 ft (1.88 m) for a 90-degree standard-turn elbow attached to a 2 in. (50 mm) piece of Schedule 10 pipe.

FAQ [27.2.3.1.3.1]

Why do the equivalent lengths in Table 27.2.3.1.1 need to be adjusted for different schedules of steel pipe when the fittings (or valves) are the same as Schedule 40 and should have the same friction loss?

The loss within a fitting is not really a friction loss but is the energy loss associated with the change in direction or turbulence associated with flow of water through the fitting. The values in Table 27.2.3.1.1 are the lengths of straight pipe (Schedule 40) that would be needed to represent the specific loss in pressure. Because it is necessary to include that specific pressure loss value in the calculations, the use of a different type of pipe, with a different internal diameter, will require a different amount of pipe to maintain the same calculated pressure loss through the fitting.

EDUFIRE.IR

Commentary Table 27.1 has been developed using the formula in 27.2.3.1.3.1 for common types of pipe used in fire sprinkler systems to help users who might be intimidated by the formula.

COMMENTARY TABLE 27.1 *Common Types and Sizes of Pipe*

	Pipe Sizes										
Material	**¾ in. (20 mm)**	**1 in. (25 mm)**	**1¼ in. (32 mm)**	**1½ in. (40 mm)**	**2 in. (50 mm)**	**2½ in. (65 mm)**	**3 in. (80 mm)**	**4 in. (100 mm)**	**6 in. (150 mm)**	**8 in. (200 mm)**	**10 in. (250 mm)**
Type K copper	0.61	0.77	0.61	0.67	0.77	0.93	0.77	0.81	0.77	0.78	0.75
Type L copper	0.79	0.89	0.65	0.72	0.82	0.99	0.82	0.86	0.84	0.85	0.82
Type M copper	0.93	1.03	0.72	0.77	0.87	1.05	0.87	0.89	0.86	0.86	0.85
Schedule 5 steel	—	1.81	1.65	1.58	1.51	1.57	1.50	1.43	1.31	—	—
Schedule 10 steel	1.41	1.24	1.24	1.24	1.23	1.37	1.34	1.32	1.26	1.17	1.18
Class 52 lined ductile iron	—	—	—	—	—	—	1.14	0.93	0.97	1.10	1.06
Class 54 lined ductile iron	—	—	—	—	—	—	0.94	0.80	0.88	1.02	1.00
CPVC	1.33	1.27	1.05	0.96	0.86	0.91	0.83	—	—	—	—

27.2.3.1.3.2 The factor thus obtained shall be further modified as required by Table 27.2.3.1.1. This table shall apply to other types of pipe listed in Table 27.2.3.1.1 only where modified by factors from 27.2.3.1.1 and 27.2.3.2.

27.2.3.2 *C* Factors. Table 27.2.3.1.1 shall be used with a Hazen–Williams *C* factor of 120 only.

27.2.3.2.1 For other values of *C*, the values in Table 27.2.3.1.1 shall be multiplied by the factors indicated in Table 27.2.3.2.1.

TABLE 27.2.3.2.1 *C Value Multiplier*

Value of *C*	100	130	140	150
Multiplying factor	0.713	1.16	1.33	1.51

Note: These factors are based upon the friction loss through the fitting being independent of the *C* factor available to the piping.

FAQ [27.2.3.2.1]

Why are the equivalent lengths multiplied by numbers greater than 1.0 for C factors greater than 120 and less than 1.0 for C factors less than 120 when C factors less than 120 have a worse friction loss?

The loss within a fitting is not really a friction loss but is the energy loss associated with the change in direction or turbulence associated with flow of water through the fitting. The values in Table 27.2.3.1.1 are the lengths of straight pipe (Schedule 40) that would be needed to represent the specific loss in pressure. Pipes with *C* factors greater than 120 have less friction loss per foot of pipe, therefore it takes more pipe to get to the same friction loss of a fitting than it does for pipe with a *C* factor of 120. Likewise, pipes with a *C* factor less than 120 take less pipe to achieve the same friction loss as does pipe with a *C* factor of 120.

C factors are addressed in Table 27.2.3.2.1. The method of hydraulic calculations used for sprinkler systems mathematically represents the friction loss for a valve or fitting as an extra length of pipe. This assumed extra length of pipe is referred to as the fitting's equivalent length or the valve's equivalent length. In an effort to make the calculations easier, the equivalent length of pipe is added to the actual length of pipe attached to the fitting. To correctly add the equivalent pipe length to the actual pipe length, the two pipes must be of the same material and of the same internal diameter, and they must have the same *C* factor.

Table 27.2.3.1.1 contains equivalent lengths for various types of fittings and valves for Schedule 40 pipe with a *C* factor of 120. Where other types of pipe are used, the length of pipe needed to create the same amount of friction loss will be different. The formula in 27.2.3.1.3.1 is used to adjust for different pipe diameter (other schedules of pipe), and 27.2.3.2.1, including Table 27.2.3.2.1, is used to adjust for differing *C* factors.

27.2.3.3 Valves. Specific friction loss values or equivalent pipe lengths for alarm valves, dry pipe valves, deluge valves, strainers, and other devices shall be made available to the authority having jurisdiction.

EDUFIRE.IR

CLOSER LOOK [27.2.3.2]

The Impact of C Factors

The example that follows illustrates the effect of differing *C* factors. The base formula for friction loss through a given length of pipe using the Hazen-Williams approach is as follows:

$$P_f = L \times \frac{4.52\,Q^{1.85}}{(C^{1.85})(d^{4.87})}$$

where:
P_f = friction loss (psi) (bar)
L = length (ft) (m)
Q = flow (gpm) (lpm)
C = friction loss coefficient
d = actual internal diameter of pipe (in.) (mm)

The example illustrates why an adjustment is needed and considers a 2 in. (50 mm), Schedule 40, 10 ft (3.1 m) length of steel pipe with a *C* factor of 100 when 135 gpm (511 L/min) is flowing through the pipe. The actual internal diameter of the pipe must be used. Table A.16.3.2 provides information in this regard for steel piping. When the *C* factor is 100, the friction loss is as follows:

$$P_{f(100)} = 100\left[\frac{4.52(135)^{1.85}}{(100^{1.85})(2.067)^{4.87}}\right] = 2.3 \text{ psi}$$

From Table 27.2.3.2.1, the multiplier for pipe having a *C* value of 100 is 0.713. The correction to the friction loss value is as follows:

$$P_{f(100)} = 2.3 \text{ psi} \times 0.713 = 1.6 \text{ psi}$$

When the *C* factor is 120, the friction loss is as follows:

$$P_{f(120)} = 10\left[\frac{4.52(135)^{1.85}}{(120^{1.85})(2.067)^{4.87}}\right] = 1.6 \text{ psi}$$

Therefore, the values from Table 27.2.3.1.1 need to be adjusted accordingly when *C* factors other than 120 are used.

Another example specifically considers the adjustment needed for a fitting. Determine the equivalent length of a 1¼ in. (32 mm) 90-degree elbow used in a system employing Schedule 10 steel pipe on a dry pipe system.

In step 1, determine the internal diameter of Schedule 10 and Schedule 40 steel pipe. From Table A.16.3.2, Schedule 10 is 1.442 in. (36.6 mm) and Schedule 40 is 1.380 in. (35.1 mm).

In step 2, the factor is derived using the following equation (see also 27.2.3.1.3.1):

$$factor = \left[\frac{1.442 \text{ in.}}{1.380 \text{ in.}}\right]^{4.87} = 1.2387$$

In step 3, the equivalent length of a 1¼ in. pipe obtained from Table 27.2.3.1.1 is established for a 1¼ in. (32 mm), Schedule 40, 90-degree elbow and multiplied by the factor determined in step 2, as follows:

3 ft (0.9 m) × 1.2387 = 3.716 ft (1.13 m)

In step 4, a final adjustment is made for the different *C* factor for a dry pipe system. From Table 27.2.4.8.1 the *C* value for a dry system using black steel is 100. From Table 27.2.3.2.1, the multiplier for pipe with a *C* value of 100 is 0.713. Therefore, the equivalent length of a 1¼ in. (32 mm) 90-degree elbow used in a system employing Schedule 10 steel pipe on a dry pipe system is as follows:

0.713 × 3.716 ft (1.13 m) = 2.6495 ft (808 mm)

27.2.3.4 Hydraulic design calculations shall include a design area selected to include ceiling sprinklers adjacent to the water curtain.

27.2.3.5 Differing Values. Specific friction loss values or equivalent pipe lengths for listed fittings not in Table 7.4.1 shall be used in hydraulic calculations where these losses or equivalent pipe lengths are different from those shown in Table 27.2.3.1.1.

Specially listed products that do not conform to the ASTM pipe sizes are addressed in 27.2.3.5. A number of special fittings that are listed for various pipe types are available on the market. These fittings often have friction loss values that differ from the values given in Table 27.2.3.1.1. Although these fittings tend to facilitate the installation of a system, they do come with a pressure penalty that must be accounted for in the hydraulic calculations. As indicated in 27.1.1.1 and 27.1.4, the working plans are required to include manufacturer's instructions for and information on these specially listed fittings.

EDUFIRE.IR

Where listed extension fittings [>2 in. (50 mm)] are utilized as permitted under 16.8.6, the equivalent length of the fitting as provided by the manufacturer must be included in the hydraulic calculations.

27.2.4* Calculation Procedure.

A.27.2.4 See Figure A.27.2.4.

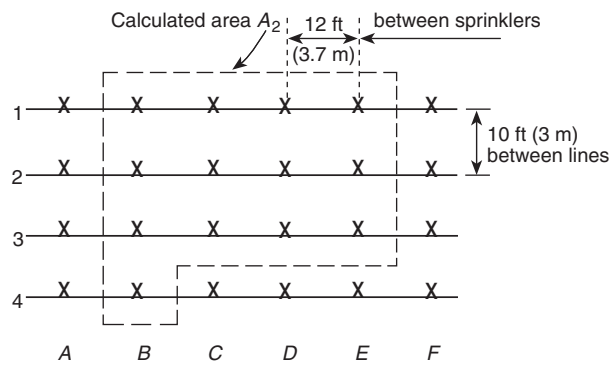

Notes:

1. For gridded systems, the extra sprinkler (or sprinklers) on branch line 4 can be placed in any adjacent location from *B* to *E* at the designer's option.
2. For tree and looped systems, the extra sprinkler on line 4 should be placed closest to the cross main.

Assume a remote area of 1500 ft^2 (139 m^2) with sprinkler coverage of 120 ft^2 (11.1 m^2)

$$\text{Total sprinklers to calculate} = \frac{\text{Design area}}{\text{Area per sprinkler}}$$

$$= \frac{1500\ (139\ \text{m}^2)}{120\ (11.1\ \text{m}^2)} = 12.5, \text{ calculate } 13$$

$$\text{Number of sprinklers on branch line} = \frac{1.2\sqrt{A}}{S}$$

Where:
A = design area
S = distance between sprinklers on branch line

$$\text{Number of sprinklers on branch line} = \frac{1.2\sqrt{1500}}{12} = 3.87$$

For SI units, 1 ft = 0.3048 m; 1 ft^2 = 0.0929 m^2.

FIGURE A.27.2.4 *Example of Determining the Number of Sprinklers to Be Calculated.*

27.2.4.1* For all systems the design area shall be the hydraulically most demanding based on the criteria of Chapter 19, Chapter 20, or the special design approaches in accordance with the requirements of Chapter 26.

A.27.2.4.1 See Figure A.27.2.4.1(a) and Figure A.27.2.4.1(b).

Paragraph 27.2.4.1 clarifies that the water supply must be capable of handling the most demanding situation faced by the system. The most demanding situation might not be the most remote from the water supply if situations closer to the water supply are more hazardous or have larger areas protected by individual sprinklers. For example, an office building might be sprinklered as a light hazard occupancy, with sprinklers spaced 14 ft × 14 ft (4.3 m × 4.3 m) in the rooms remote from the water supply and with extended

EDUFIRE.IR

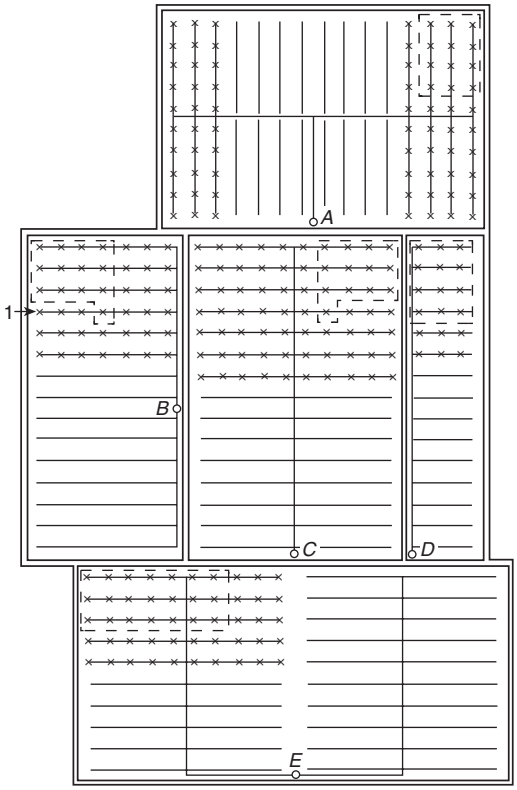

1 This sprinkler is not in the selected area of operation.

FIGURE A.27.2.4.1(a) *Example of Hydraulically Most Demanding Area.*

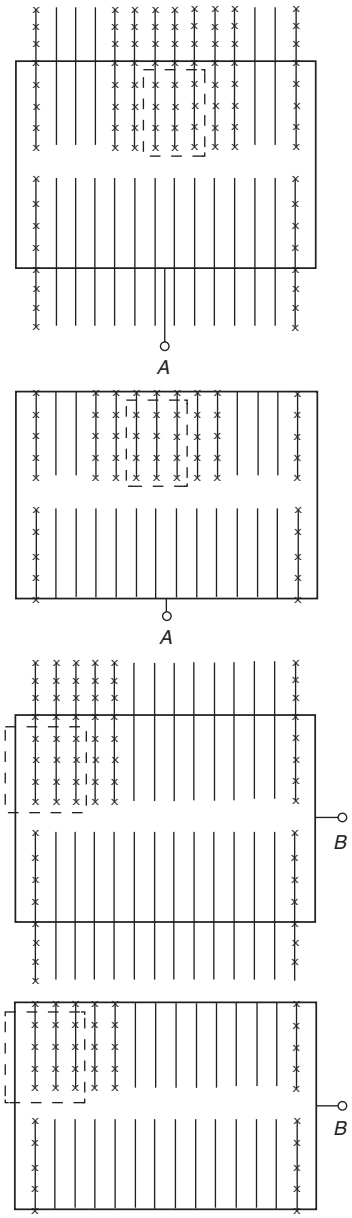

FIGURE A.27.2.4.1(b) *Example of Hydraulically Most Demanding Area for Various Piping Arrangements.*

coverage sprinklers covering 20 ft × 20 ft (6.1 m × 6.1 m) closer to the water supply. The extended coverage sprinklers are closer to the water supply, but they might produce a demand greater than the sprinklers spaced 14 ft × 14 ft (4.3 m × 4.3 m) far from the water supply. Where the most demanding condition is not readily obvious, multiple calculations will need to be performed for verification. Where multiple areas are being calculated, it is possible that one area will have a higher pressure demand and the other area will have a higher flow demand. In those circumstances, it is not necessary to ensure that the higher flow is available at the higher pressure. Instead, the water supply needs to be verified only as being capable of handling each individual demand situation.

Paragraph 27.2.4.1 also recognizes that the design areas are not always in the shape of a rectangle. For example, in a design involving listed residential sprinklers, the design area of four sprinklers might be a square, depending on the branch line locations and the room configuration.

EDUFIRE.IR

The storage discharge requirements were broken out of Chapter 20 and are located in Chapter 21 through Chapter 25. But because the general rules remain in Chapter 20, 27.2.4.1 references only Chapter 20. However, by inference, all the rules in Chapter 21 through Chapter 25 are referenced in Chapter 20.

ASK THE AHJ

What does the authority having jurisdiction enforce for a design area when there are multiple hazard classifications and one of the hazards occupies an area less than the required minimum design area?

The general rule would require that the full design area for the selected criteria would need to be met unless the space is either separated by construction to allow for the use of the room design method as provided by 19.3.3.1.1(2), 19.3.3.3, Section 20.8, and 27.2.4.1.1 or a special design area applies as provided by 19.3.3.1.1(3) and 19.3.3.4. It is anticipated that the effect of the rising fire plume above the fire would extend beyond the actual footprint of the hazard and thus require the calculation of the larger design area. The provisions of 19.2.2 and Section 20.10 further expand upon this concept by requiring the higher design density included in the hydraulic calculations be extended 15 ft (4.6 m) beyond the perimeter of the higher hazard area or a segregating feature be provided to delay the extension of heat. Where such an acceptable segregating feature is provided, the higher design density need extend only to the edge of the design feature. In either case, the overall design area would still need to cover the full design area; however, the area outside the bounds of the extension of the higher density could utilize a lower density consistent with the hazard associated with that area. See A.19.2.2 and A.20.10 for additional discussion. Paragraphs 27.2.4.2.4, A.27.2.4.2.4, and 27.2.4.2.5 were added in 2013 to provide an alternative calculation approach for the system demand with this scenario. The approach was developed in response to concerns with calculation areas that crossed boundaries between hazard areas sometimes contained sprinklers having differing orifice sizes. The inclusion of larger orifice sprinklers outside the portion of the design area required to operate at the higher density would cause an excessive overdischarge of water and resultant excessive demand. As a compromise, the concept of utilizing an alternative design that would ensure that the overall level of water demand was at least sufficient to meet the minimum discharge demand for the density/area was developed. See A.27.2.4.2.4 for a detailed step-by-step explanation of the process.

System A in Figure A.27.2.4.1(a) shows the design area for 12 sprinklers with three branch lines and four sprinklers per branch line. However, not all sprinkler systems are perfectly rectangular design areas as shown in System A. Frequently, an extra sprinkler or two must be added to the design area to ensure that the full required design area is covered. Figure A.27.2.4.2.1 illustrates such an example — the design area becomes two rectangles, one smaller and one larger.

Systems B and C in Figure A.27.2.4.1(a) are examples of two such rectangular design areas, with the location of the extra sprinkler on the fourth branch line.

System D in Figure A.27.2.4.1(a) illustrates the situation described in 27.2.4.2.3 and 27.2.4.3.3, in which a system has an insufficient number of sprinklers on the branch lines to meet the rule for 1.2 times the square root of the area. In this case, additional sprinklers on additional branch lines are added to maintain the minimum design area.

System E in Figure A.27.2.4.1(a) illustrates that sprinklers on both sides of the cross main can be used to achieve the required design area and meet the rule for 1.2 times the square root of the design area.

Figure A.27.2.4.1(b) illustrates the design area for looped systems with various riser locations and branch line configurations.

27.2.4.1.1 Room Design Method. Where the design is based on the room design method, the calculation shall be based on the room and communicating space, if any, that is hydraulically the most demanding.

The use of the room design method, which is addressed in 27.2.4.1.1, is popular in highly compartmented occupancies. In effect, this method predicts that the number of sprinklers that will open during a fire is the total of all sprinklers in the room or compartment. If walls and the openings therein from the room to other spaces are not protected as required by 19.3.3 or 20.10, additional sprinklers must be used in those adjoining spaces.

EDUFIRE.IR

CLOSER LOOK [27.2.4]

NFPA 13 Hydraulic Calculation Procedure

Details on how to properly calculate the water demand of a sprinkler system are provided in 27.2.4. The various design criteria and concepts described throughout Chapter 19 through Chapter 25 needed to hydraulically design a system are tied together in 27.2.4.

The concepts in Chapter 19 through Chapter 25 are used to determine the amount of water each sprinkler will need to discharge, the pressure necessary to achieve that flow, the size or the overall design area or the number of sprinklers to include in the hydraulic calculation, the duration of the water supply, and the existence and demand needed for hose connections. Hydraulic calculations typically are then performed by starting with the flow and pressure demand at the most hydraulically demanding single point in the system, which might or might not be the most distant sprinkler from the water supply. Working back toward the water supply, pressure losses and additional flows are added to determine the total water demand.

At some points within a system, the waterflow will split and travel in two or more directions. A flow split happens on cross mains with multiple branch lines, at connections to lines supplying in-rack sprinklers, and at connections to hose stations. When this type of flow split occurs, the demand for each leg of the split needs to be calculated independently. Because only one pressure reading can exist at a single point in the system, the more demanding pressure reading is used at the point of separation. Therefore, the flow through the line that requires less pressure needs to be adjusted to the higher pressure. This adjustment results in a greater waterflow because of the greater amount of pressure. The adjustment is accomplished using a combined K-factor, as shown in the example that follows, and as permitted by 27.2.2.4.3. (See the commentary following 27.2.2.4.3.)

Consider the portion of a sprinkler system shown in the following illustration. The flow through sprinklers 1 and 2 is calculated on the first branch line, and the flow through sprinkler 3 is calculated on the second branch line.

Hydraulic calculations for the first branch at point A indicate a demand of 37 gpm (140 L/min) at 15 psi (1.0 bar). This demand includes discharge through sprinklers 1 and 2 and the associated pressure and elevation losses. Hydraulic calculations for the second branch line when sprinkler 3 is operating indicate a demand of 18 gpm (68.1 L/min) at 12 psi (0.8 bar) at point A. Because only one pressure can exist at point A, the higher pressure of 15 psi (1.0 bar) must be provided, so that the proper discharge from sprinklers 1 and 2 is obtained. Supplying a pressure of 12 psi (0.8 bar) will result in less than 37 gpm (140 L/min) through the first branch line. At point A, 15 psi (1.0 bar) will create a waterflow in excess of 18 gpm (68.1 L/min) through the second branch line to sprinkler 3. The increased flow can be calculated by determining an equivalent K-factor at point A, using the demand information for sprinkler 3 at point A of 18 gpm (68.1 L/min) at 12 psi (0.8 bar) and rearranging the formula $Q = K\sqrt{P}$ to solve for an equivalent K-factor. This equation yields an equivalent K-factor of K-5.2, as follows:

$$\frac{(18\,\text{gpm})}{\sqrt{12\,\text{psi}}} = 5.2$$

The equivalent K-factor is used to determine the flow at sprinkler 3 if the pressure is increased to 15 psi (1.0 bar) with the formula $Q = K\sqrt{P}$. In this case, $Q = 5.2\sqrt{15}$ psi (1.0 bar) = 20 gpm (76 L/min). The total demand at point A becomes 57 gpm (216 L/min) [37 gpm + 20 gpm (140 L/min + 76 L/min)] at 15 psi (1.0 bar).

Calculations at the point of connection of the line that supplies in-rack sprinklers are done the same as indicated in the preceding example. At the point of connection where the ceiling sprinkler system and the in-rack sprinkler system interconnect, the two demands are evaluated, with the higher pressure demand selected and the flow at the lower demand adjusted to the higher pressure. For some specific commodities stored in racks, the protection criteria do not require the in-rack sprinkler system water demand to be added to the ceiling system demand. Examples include those permitted in Section 25.8 as well as certain combustible liquids in plastic containers protected in accordance with NFPA 30, *Flammable and Combustible Liquids Code*. The protection criteria generally employ combinations of in-rack sprinklers and in many cases solid barriers throughout the rack that are intended to operate independent of the installed ceiling sprinkler protection. In those circumstances, the most demanding flow from either the ceiling sprinkler system or the in-rack sprinkler system must be met. Unless the standard prescribing the sprinkler protection requirements expressly permits the water supply to satisfy the more demanding of the two systems (ceiling sprinklers or in-rack sprinklers), the two demands need to be added together after they are balanced to the higher pressure demand, as shown in the preceding example.

Hose connections to sprinkler systems that are part of a standpipe system required to meet NFPA 14, *Standard for the Installation of Standpipe and Hose Systems,* will also need to be adjusted as described in the preceding example where the building is partially sprinklered as provided by 19.2.6.4(3). Where the building is fully sprinklered, each system would be calculated separately to meet the higher demand as provided by 19.2.6.4(1) and 19.2.6.4(2).

Hose connections to sprinkler systems that are not part of a standpipe system, such as those installed for first aid in warehouses, are not required to follow the adjustments described in the example. Instead, the flow demand is added to the sprinkler demand at the point of connection using the pressure available in the system at that point. In effect, no minimum

(Continues)

EDUFIRE.IR

CLOSER LOOK [27.2.4] *Continued*

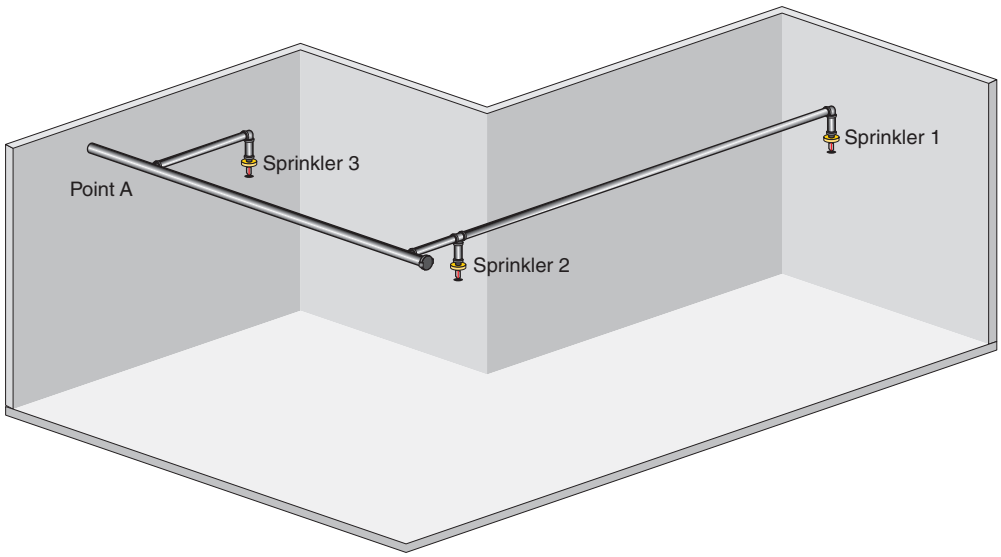

Branch Line Schematic. (Courtesy of Stephan Laforest)

pressure requirement exists for hose connections that are not part of a standpipe system.

Figure A.27.2.4 illustrates how to determine the number of sprinklers in a gridded system's area of operation and how to determine the number of sprinklers on each branch line in the area of operation. Note that the formulas used in Figure A.27.2.4 work only where there is relatively uniform spacing of sprinklers and where placement of sprinklers is approximately half the distance to the wall with respect to the location of the next sprinkler in the opposite direction. In Figure A.27.2.4, the design area must physically cover a footprint of 1500 ft^2 (139 m^2). If the sprinklers are not uniformly spaced at 10 ft × 12 ft (3.0 m × 3.7 m) coverage, additional sprinklers very well could be needed, so that the physical footprint of the design area is at least 1500 ft^2 (139 m^2).

Similarly, if the sprinklers on the most remote branch line are close to the wall, the 13 sprinklers shown in the design area in Figure A.27.2.4 might not cover a physical footprint of 1500 ft^2 (139 m^2), and additional sprinklers would be needed. For example, if the sprinklers on the most remote branch line were 1 ft (0.3 m) away from the wall, the 13 sprinklers shown would physically cover only 1368 ft^2 (127 m^2) [26 ft × 48 ft (2.4 m × 4.5 m) for the large rectangle plus the 120 ft^2 (11.1 m^2) covered by sprinkler B]. Adding an additional sprinkler (sprinkler C in Figure A.27.2.4) would increase the covered area to only 1488 ft^2 (138 m^2), so an additional sprinkler (sprinkler D) would be needed to ensure that the design area covered a physical footprint of at least 1500 ft^2 (139 m^2).

If the sprinkler system in Figure A.27.2.4 were a tree or loop system, the branch line would terminate at the last sprinkler on the right in the calculated area, and the cross main probably would be to the left. In this situation, the extra sprinkler on branch line 4 would have to be sprinkler B for tree and loop systems, because it is closest to the supply and would be the hydraulically most demanding on that branch line. Tree and loop systems do not have the freedom implied by Note 1 to Figure A.27.2.4.

When using the room design method, users must remember that a corridor is also a room. In many compartmented occupancies (e.g., guest room areas of hotels), the corridor is likely the most demanding room. In such a case, Chapter 19 does not require that all the sprinklers in the corridor open during a fire. The probability that so many sprinklers would open in a long narrow corridor served by a single line of sprinklers along the corridor is so remote that the decision has been made to limit the number of sprinklers in the room design method to five for standard coverage sprinklers and all sprinklers within any 75 linear ft (23 linear ft) as provided by 19.3.3.3.6 and 19.3.3.3.7.

EDUFIRE.IR

An interesting note is that the room design method is the same for both wet pipe and dry pipe systems. No sprinklers are required to be added to the design for dry pipe systems because the assumption is that the walls around the room will contain the fire, even during the delay in getting water to the sprinklers in a dry pipe system.

Note that the room design method overrides the requirement in 27.2.4.2.1 that the design area be rectangular. When the room design method is used, the shape of the most demanding room becomes the shape of the design area.

27.2.4.2 Density/Area Method.

Starting with the 2010 edition of NFPA 13, the rules for discharge of large drop and control mode specific application (CMSA) sprinklers were combined. Large drop sprinklers are now considered to be a type of CMSA sprinkler.

27.2.4.2.1* Where the design is based on the density/area method, the design area shall be a rectangular area having a dimension parallel to the branch lines at least 1.2 times the square root of the area of sprinkler operation *(A)* used, which shall permit the inclusion of sprinklers on both sides of the cross main.

SEE ALSO
The "Remote Areas" feature at the end of this chapter (pp. 1108–1111).

A.27.2.4.2.1 The word "rectangular" in this section is not meant to imply that the design area always has to be a rectangle. Instead, the intent is to require a design area with sides that meet at right angles and the longer side parallel to the branch lines. In many cases, this will be a perfect rectangle with four sides. However, in some cases with multiple sprinklers on multiple branch lines within the design area, the design area can be satisfied with fewer sprinklers on the last branch line than on the first, resulting in a design area that is a rectangle with the corner cut out as shown in Figure A.27.2.4.2.1.

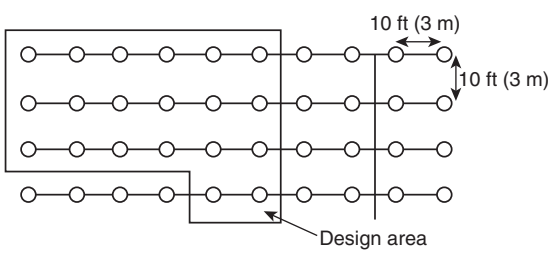

Discharge criteria: 0.45 gpm²/2000 ft² (18.3 mm/min/m²)/186m²
20 sprinklers in design area 1.2(2000)0.5/10 (186 m²) = 5.3 rounded up to 6 sprinklers per branch line
Note that the design area is not a perfect rectangle.
The 2000 ft² (186 m²) requirement can be met with fewer sprinklers on the fourth branch line back, so there is no need to include the additional four sprinklers on the fourth branch line.

FIGURE A.27.2.4.2.1 *Example of Nonsymmetrical Hydraulically Most Demanding Area.*

27.2.4.2.2 Any fractional sprinkler shall be carried to the next higher whole sprinkler.

27.2.4.2.3 In systems having branch lines with an insufficient number of sprinklers to fulfill the 1.2 requirement, the design area shall be extended to include sprinklers on adjacent branch lines supplied by the same cross main.

27.2.4.2.4* Where the available floor area for a specific area/density design criteria, including any extension of area as required by 19.2.2 and Section 20.10, is less than the required minimum design area, the design area shall be permitted to only include those sprinklers within the available design area.

EDUFIRE.IR

A.27.2.4.2.4 The following steps outline the procedure for calculation in accordance with 27.2.4.2.4:

(1) Calculate the hydraulic design discharge including those sprinklers within the available floor area.
(2) Calculate the minimum required discharge by multiplying the required design density times the required minimum design area.
(3) Subtract the discharge calculated in Step 1 from the discharge calculate in Step 2.
(4) Where the discharge calculated in Step 3 is greater than 0, the hydraulic design discharge is recalculated including an additional flow equal to that calculated in Step 3. The additional flow is added at the point of connection of the branch line to the cross main furthest from the source.
(5) Where the discharge calculated in Step 3 is less than or equal to 0, the hydraulic design discharge is as calculated in Step 1.

27.2.4.2.5 Where the total design discharge from these operating sprinklers is less than the minimum required discharge determined by multiplying the required design density times the required minimum design area, an additional flow shall be added at the point of connection of the branch line to the cross main furthest from the source to increase the overall demand, not including hose stream allowance, to the minimum required discharge.

Paragraphs 27.2.4.2.4, A.27.2.4.2.4, and 27.2.4.2.5 were added in 2013 to provide an alternative calculation approach for the system demand as opposed to having to calculate a full design area as generally provided by 19.2.2, A.19.2.2, 20.10, and A.20.10. The approach was developed in response to concerns with calculation areas that crossed boundaries between hazard areas sometimes containing sprinklers having differing orifice sizes. The inclusion of larger orifice sprinklers outside the portion of the design area required to operate at the higher pressure needed for smaller orifice sprinklers would cause an excessive overdischarge of water and higher overall demand. As a compromise, a concept was developed of utilizing an alternative design that would ensure that the overall level of water demand was at least sufficient to meet the minimum discharge demand for the density/area application.

27.2.4.3 CMSA Sprinkler Method.

CMSA sprinklers do not follow the density/area method of calculation, and the discharge criteria in the storage chapters do not specify how many sprinklers to include on the branch line [as they do for early suppression fast-response (ESFR) sprinklers, where the criteria mandate four sprinklers on three branch lines]. Therefore, the user must know how many sprinklers to calculate on the branch lines in the design area. To obtain the number of sprinklers to be calculated, 27.2.4.3.1 instructs the user to calculate the area covered by the number of the design sprinklers spaced at the maximum allowable area per sprinkler and then to multiply the square root of that calculated design area by 1.2. For example, if the tables in Chapter 20 through Chapter 25 required 15 sprinklers to be located in the design area, and the maximum allowable spacing per sprinkler is 100 ft^2 (9.3 m^2) [with 10 ft (3.0 m) between sprinklers on a branch line], 15 sprinklers would cover 1500 ft^2 (139 m^2). Using the rule for 1.2 times the square root of the design area, the dimension parallel to the branch line is 46.5 ft (14.5 m). Therefore, five sprinklers would be calculated on the most remote branch line, five sprinklers would be calculated on the second most remote branch line, and five sprinklers would be calculated on the third most remote branch line, for a total design area of 15 sprinklers. This calculation incorporates the requirement of 27.2.4.2.2 to round a fractional sprinkler to the next highest sprinkler.

27.2.4.3.1 For CMSA sprinklers, the design area shall be a rectangular area having a dimension parallel to the branch lines at least 1.2 times the square root of the area protected by the number of sprinklers to be included in the design area. The design area protected by the number of sprinklers to be used by the 1.2 rule shall be based on the maximum allowable area per sprinkler.

27.2.4.3.2 Any fractional sprinkler shall be carried to the next higher whole sprinkler.

EDUFIRE.IR

27.2.4.3.3 In systems having branch lines with an insufficient number of sprinklers to fulfill the 1.2 requirement, the design area shall be extended to include sprinklers on adjacent branch lines supplied by the same cross main.

27.2.4.4 ESFR Sprinkler Method. For ESFR sprinklers, the design area shall consist of the most hydraulically demanding area of 12 sprinklers, consisting of 4 sprinklers on each of three branch lines, unless other specific numbers of design sprinklers are required in other sections of this standard.

The requirement that the design area for ESFR sprinklers to include four sprinklers on three branch lines is correct for most applications of ESFR sprinklers. For some applications, such as certain tire arrays protected in accordance with Table 23.8, additional ESFR sprinklers must be calculated to achieve the 20 sprinkler design application. For this application, the design area must include five sprinklers on each of four branch lines as provided by footnote c to Table 23.8.

27.2.4.5* Gridded Systems.

A.27.2.4.5 See Figure A.27.2.4.5.

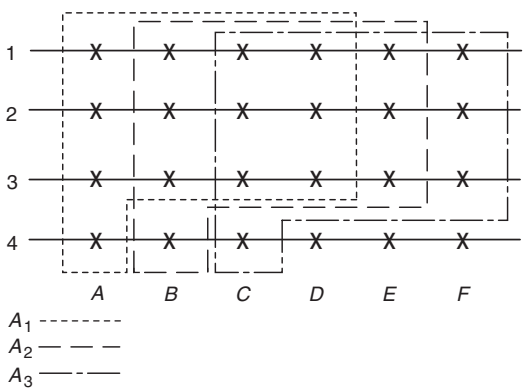

FIGURE A.27.2.4.5 *Example of Determining the Most Remote Area for Gridded System.*

27.2.4.5.1 For gridded systems, the designer shall verify that the hydraulically most demanding area is being used.

Gridded sprinkler systems are covered in 27.2.4.5. In the 1975 edition of NFPA 13, the shape of the design area for a gridded system was a square located along the far cross main (not the supply cross main). However, that configuration did not necessarily represent the hydraulically most demanding area. Because of the complexity of the flow in a gridded system and the bidirectional flows that often occur within the same branch line, the hydraulically most demanding area is not readily obvious.

To determine the appropriate design area, 27.2.4.5.2 requires that an initial design area be selected and one additional area be considered on each side of the initially selected area. This approach results in three separate design areas that overlap each other, as illustrated in Figure A.27.2.4.5. Design area A_2 represents the initially chosen design area. Hydraulic calculations for each of the three design areas are required to determine the most demanding area. If the initially chosen area (A_2) is determined not to be the most demanding, then an additional area adjacent to the area with the highest demand of the three (either A_1 or A_3) needs to be calculated to verify that this additional area is not more demanding. This technique is typically referred to as "peaking the system." This peaking calculation is a common feature of hydraulic computer programs that is often completed automatically to verify a single calculated area.

Hydraulic calculations for a gridded system verify the hydraulically most demanding area and determine the system demand. These calculations are tedious and extremely time-consuming if performed by

EDUFIRE.IR

SEE ALSO

The "Hardy-Cross Method" feature at the end of this chapter (pp. 1101–1105).

hand. Performing the calculations with a hydraulics computer program is the most economical method and is the standard for the industry.

27.2.4.5.2 A minimum of two additional sets of calculations shall be submitted to demonstrate peaking of demand area friction loss when compared to areas immediately adjacent on either side along the same branch lines, unless the requirements of 27.2.4.5.3 are met.

27.2.4.5.3 Computer programs that show the peaking of the demand area friction loss shall be acceptable based on a single set of calculations.

27.2.4.6 Design Densities.

27.2.4.6.1* System piping shall be hydraulically designed using design densities and areas of operation in accordance with 19.3.3.2 or Chapter 20 as required for the occupancies or hazards involved.

The reference to Chapter 20 in 27.2.4.6.1 is intended to encompass all the storage discharge requirements in Chapter 21 through Chapter 25.

A.27.2.4.6.1 When listed with antifreeze solution, sprinklers should be hydraulically calculated in accordance with the listing and manufacturer's instructions.

27.2.4.6.2* The density shall be calculated on the basis of floor area of sprinkler operation. Where sprinklers are installed under a sloped ceiling, the area used for this calculation shall be the horizontal plane below the sprinklers.

When evaluating remote area requirements for sprinkler systems installed under sloping roofs or ceilings, the actual horizontal floor area calculated must be equal to or greater than the required remote design area.

The area of coverage per sprinkler for determination of the spacing for density application purposes is based on the horizontal area of coverage of the sprinkler, as determined by the $S \times L$ rules of 9.5.2 — that is, horizontally along branch lines and between branch lines. Consider a sprinkler system where the branch lines are 12 ft (3.7 m) apart and the sprinklers are 10 ft (3.0 m) apart on the branch lines [120 ft^2 (11.1 m^2) spacing per sprinkler]. If the sprinkler system is installed so that the distance between the sprinklers and the walls is only 2 ft (0.6 m), the sprinkler in the corner would still be considered as covering 120 ft^2 (11.1 m^2) for the purpose of applying the density to the sprinkler to determine the required flow from the sprinkler. Therefore, if the required density in this case is 0.2 gpm/ft^2 (8.1 mm/min), the sprinkler would need to flow 24 gpm (91 L/min) [0.2 gpm/ft^2 × 120 ft^2 (8.1 mm/min × 11.1 m^2)], and not a lesser flow, because of the walls.

Where a small room, as defined in 3.3.196, is considered, the area of sprinkler coverage is calculated as the area of the room divided by the number of sprinklers in that room. See 10.2.4.1.2 and 10.2.5.2.3 for additional information regarding small rooms.

The piping layout of many systems is not always as uniform as described in the preceding example. Due to building features, sprinkler placement and piping layouts can take on a more varied arrangement. This arrangement can result in differing areas of coverage for sprinklers in the design area and requires evaluation of several portions of a system to determine the hydraulically most demanding area and the proper system demand. Once the area of coverage per sprinkler and the appropriate dimensions for *S* and *L* are determined, other sprinklers are not required to be uniformly spaced in this arrangement. However, any other sprinkler layout that results in a greater hydraulic demand should be calculated separately to verify that it will work.

A.27.2.4.6.2 See Figure A.27.2.4.6.2.

27.2.4.6.3 The area covered by any sprinkler used in hydraulic design and calculations shall be the horizontal distances measured between the sprinklers on the branch line and between the branch lines in accordance with 9.5.2.

27.2.4.6.4 Where sprinklers are installed above and below a ceiling or in a case where more than two areas are supplied from a common set of branch lines, the branch lines and supplies shall be calculated to supply the largest water demand.

EDUFIRE.IR

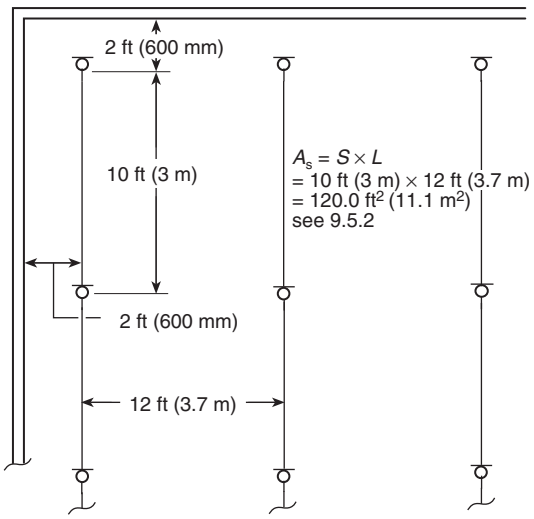

FIGURE A.27.2.4.6.2 *Sprinkler Spacing.*

27.2.4.6.5* For sloped ceiling applications, the area of sprinkler application for density calculations shall be based upon the projected horizontal area.

A.27.2.4.6.5 Where the slope is parallel with the branch lines, the area per sprinkler for hydraulic calculation purposes would be found as

$$A_s = S' \times L \qquad \textbf{[A.27.2.4.6.5]}$$

where:

S' = $(\cos \theta)S$

θ = angle of slope

S = distance between sprinklers on branch line per 9.5.2.1.2

See Figure A.27.2.4.6.2.

27.2.4.7* Design Area Sprinklers.

A.27.2.4.7 When it is not obvious by comparison that the design selected is the hydraulically most remote, additional calculations should be submitted. The most distant area is not necessarily the hydraulically most remote.

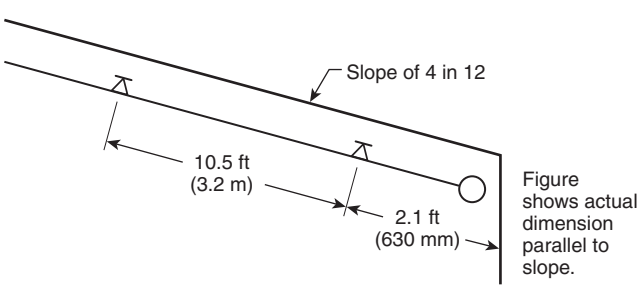

Calculation floor area = 10 ft × 12 ft (See Figure A.27.2.4.6.2)

FIGURE A.27.2.4.6.5 *Determination of Floor Area Under Sloped Ceiling/Roof.*

FAQ [27.2.4.6.5]

To determine the remote area for a sprinkler system installed under sloping roofs or ceilings, is the remote area measured along the slope or on the floor?

As addressed earlier, the density is based on the floor area, which holds true even under sloped ceiling conditions. In such a case, the density is applied to the area projected on the floor, not the area on the slope that was calculated in accordance with Chapter 9. The area on the floor will be somewhat smaller than the area along the slope, which will result in a somewhat smaller flow demand from the sprinkler. However, the smaller flow demand will be compensated for by the fact that the total design area will also be calculated on the floor, which will include a total of more sprinklers than if the area were calculated along the slope. See the commentary following 27.2.4.6.2 for more information on sloped ceilings.

EDUFIRE.IR

Paragraph A.27.2.4.7 warns that the most remote area is not necessarily the hydraulically most demanding and that a hydraulic evaluation would be necessary to verify the location of the area. Figure A.27.2.4.1(a) and Figure A.27.2.4.1(b) provide examples of the location and the shape of the hydraulically most demanding areas for tree and looped systems. The figures illustrate uniform piping and sprinkler layouts in a space assumed to have the same occupancy classification throughout. However, in many situations, the system layout is not as uniform, more than one occupancy hazard exists, and the hydraulically most demanding area is not so obvious.

Occupancy hazard classification, piping configuration, and sprinkler spacing are factors that must be considered in determining the location of the design area. Exhibit 27.2 illustrates a building that includes three different operations and hazards. Even though the office space, which is a light hazard occupancy, is the farthest from the riser, it might not represent the hydraulically most demanding area. The space used for the storage of finished product up to 14 ft (4.3 m) in height needs to be protected for the appropriate commodity classification. The flow-coating operation is considered an extra hazard (Group 2) occupancy. An evaluation of areas in each of the three spaces is needed to verify the most demanding area. The difficulties associated with determining the hydraulically most demanding area for gridded systems are addressed in 27.2.4.5.

EXHIBIT 27.2 *Building Containing Various Operations and Fire Hazards.*

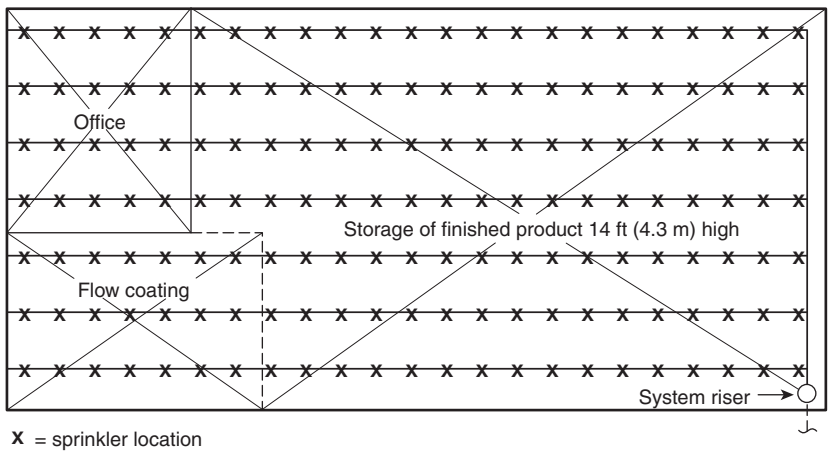

27.2.4.7.1 Each sprinkler in the design area and the remainder of the hydraulically designed system shall discharge at a flow rate at least equal to the stipulated minimum water application rate (density) multiplied by the area of sprinkler operation.

27.2.4.7.1.1 Where sprinklers are required to discharge a specific flow or pressure rather than a density, each sprinkler in the design area shall discharge at a flow or pressure at least equal to the minimum required.

27.2.4.7.2* Where the design area is equal to or greater than the area in Table 27.2.4.7.2 for the hazard being protected by the sprinkler system, the discharge for sprinklers protecting small compartments 55 ft^2 (5.1 m^2) or less, such as closets, washrooms, and similar compartments that are in the design area, shall be permitted to be omitted from the hydraulic calculations.

A.27.2.4.7.2 The intent of this section is not to allow the omission of discharge from sprinklers in small compartments where the design area has been reduced below the values in Table 27.2.4.7.2 for situations such as quick-response sprinklers. Where quick-response sprinklers are used, the discharge from sprinklers in small compartments in the design area can be omitted as long as the design area meets the size required by Table 27.2.4.7.2.

EDUFIRE.IR

TABLE 27.2.4.7.2 *Minimum Design Area*

Occupancy Hazard Classification	*Minimum Design Area to Omit Discharge from Sprinklers in Small Compartments in Design Area [ft² (m²)]*
Light hazard–wet pipe system	1500 (140)
Light hazard–dry pipe system	1950 (180)
Ordinary hazard–wet pipe system	1500 (140)
Ordinary hazard–dry pipe system	1950 (180)
Extra hazard–wet pipe system	2500 (230)
Extra hazard–dry pipe system	3250 (300)

The intent of 27.2.4.7.2 is to permit sprinklers in a small compartment, 55 ft² (5.1 m²) or less, to be considered not open (closed) during a fire in the area around the compartment. To use this rule, the area of operation for calculations must be at least 1500 ft² (140 m²) for wet pipe systems in light and ordinary hazard occupancies and at least 2500 ft² (230 m²) for wet pipe systems in extra hazard occupancies. For dry pipe systems, the area of operation for calculations must be at least 1950 ft² (180 m²) for light and ordinary hazard occupancies and at least 3250 ft² (300 m²) for extra hazard occupancies. While the sprinklers are allowed to be omitted from the hydraulic calculations, the floor space for these small spaces are included as part of the overall design area in determination of the indicated minimum design areas specified in Table 27.2.4.7.2.

If quick-response sprinklers are used in a wet pipe system in a light or ordinary hazard occupancy, and the design area is decreased below 1500 ft² (140 m²), the sprinklers in the small compartments are not permitted to be considered closed. In other words, this rule is not permitted to be applied because the design/density area falls below the minimum required in Figure 19.3.3.1.1.

In any case where the room design method would be advantageous, the area of operation would be below the minimum area specified in Figure 19.3.3.1.1. Since the area is less than the minimum, this rule would not normally be applied when the room design option is used.

To use the rule in 27.2.4.7.2, the compartments must be 55 ft² (5.1 m²) or less in size and meet the definition of a *compartment* as provided by 3.3.38. These small spaces would generally be of such a size that only one sprinkler is required to protect them. The sprinkler protection in the small compartment still must be verified as being capable of producing the appropriate discharge density, as specified in Figure 19.3.3.1.1. The intent of this provision is to prevent installations that would not be capable of delivering the minimum design density to sprinklers located in these small spaces.

It is compelling to note the types of areas described in 27.2.4.7.2. Small compartments are intended not only to be physically small but also to contain a relatively small fuel load. For example, a small office can meet the size limitations indicated; however, this rule is not intended to apply to small offices. The intent is to allow omission of sprinklers from the hydraulic calculations for small compartments that are ancillary to the primary occupancy of the building or space. The intent of the rule is not to eliminate the rooms that constitute the primary occupancy of a building or space from the calculations. If sprinklers in these spaces are not included in the calculations, the proper water demand will not be determined and can cause unfavorable sprinkler system performance.

The provisions of 27.2.4.7.2 do not provide a specific limit as to the total number of small compartments that can be eliminated from the hydraulic calculations within any single design area calculation; however, good judgement should be applied to ensure that the resultant calculation covers an appropriate operating design area with sufficient overall discharge to address the protected hazard at hand.

In compartmented areas, such as the small spaces described, the simultaneous operation of all the sprinklers in the design area is unlikely. On the other hand, sprinklers installed in closely associated spaces having limited closure protection of the openings between such spaces could be expected to operate all the sprinklers in response to a fire. Due consideration should be given to the likelihood of such an occurrence.

One of the primary advantages of omitting sprinklers from these small compartments is not only the elimination of the required discharge density over the floor area of the space but also the elimination of the overdischarge commonly associated with such small spaces. The higher pressure required to operate sprinklers with larger spacing located outside the small compartment can result in a significant overdischarge

EDUFIRE.IR

within the small compartment. Even where the omission of sprinklers from the hydraulic calculations is not permitted, due to either the size of the compartment or to the use of a lesser overall design area than is required, alternative means of managing the overdischarge might be permitted. For small rooms in light hazard occupancies, the use of a varying orifice sprinklers is not permitted for purposes of balancing sprinkler flow and managing the overdischarge from operating sprinklers in small rooms. See 27.2.4.9.2 and associated commentary.

27.2.4.7.2.1 The sprinklers in these small compartments shall be capable of discharging the minimum density appropriate for the hazard they protect in accordance with Figure 19.3.3.1.1.

27.2.4.7.2.2 The requirements of 27.2.4.7.2 shall only apply where the area of application is equal to or greater than the area shown in Table 27.2.4.7.2 for the appropriate hazard classification (including a 30 percent increase for dry pipe systems).

27.2.4.7.3 The requirements of 27.2.4.7.1.1 to include every sprinkler in the design area shall not apply where sprinklers are provided above and below obstructions such as wide ducts or tables.

27.2.4.7.3.1 Sprinklers under the obstruction shall not be required to be included in the hydraulic calculation of the ceiling sprinklers.

The basic idea behind hydraulic calculations, including reasonable safety factors, is to account for all the sprinklers that might open in case of a fire. When sprinklers are installed both above and below obstructions, all sprinklers above and below the obstructions are unlikely to open. Rather than force the user to calculate both sets of sprinklers simultaneously, the user is directed to prove the most demanding situation with calculations. In most cases, ceiling sprinklers will represent the greatest demand, unless significant numbers of sprinklers are installed under obstructions with long runs of relatively small-diameter pipe.

The presence of a permanent or temporary obstruction, such as an overhead garage door, is treated in a manner to similar to that for a ceiling configuration that requires sprinklers to be located above and below the ceiling.

27.2.4.7.3.2 Where the piping to sprinklers under obstructions follows the same sizing pattern as the branch lines, no additional hydraulic calculations shall be required for sprinklers under obstructions.

The requirement in 27.2.4.7.3.2 clarifies that as long as the pipe sizing under the obstruction is the same as the branch lines, the sprinklers under the obstruction generally will not be more demanding because of the increased elevation head gained dropping down under the obstruction. Care still should be taken, however, when long runs of pipe are utilized to provide protection under an obstruction, where multiple sprinklers are fed off a single drop, and where the drop is a dead-end feed off of a gridded overhead system.

27.2.4.7.4 Water demand of sprinklers installed in concealed spaces shall not be required to be added to the ceiling demand.

27.2.4.7.5 Calculations shall begin at the hydraulically most remote sprinkler.

27.2.4.7.6 The calculated pressure at each sprinkler shall be used to determine the discharge flow rate for that particular sprinkler.

27.2.4.7.7 Where sprinklers are installed under a sloped ceiling, the area shall be calculated on a horizontal plane below the sprinklers.

At first glance, 27.2.4.7.7 might seem redundant with 27.2.4.6.5. However, 27.2.4.6.5 addresses the area covered by a single sprinkler that will be multiplied by the density to achieve the minimum flow required from the sprinkler, whereas 27.2.4.7.7 is intended to cover the entire operating area (or design area).

The intent of NFPA 13 is to require the operating area to be measured along the floor, not along the slope, even though the area along the slope was used for spacing the sprinklers. This requirement results in more sprinklers in the design area than if the area were measured along the slope. While fire tests in sloped occupancies are not as extensive as in flat situations, sufficient fire experience has demonstrated that this situation is a problem, and a conservative approach has been taken to determine the number of sprinklers in the operating area.

EDUFIRE.IR

27.2.4.8 Friction Loss.

With regard to 27.2.4.8, water flowing through a pipe, a fitting, or any other attachment, such as a valve or a strainer, results in a pressure loss due to friction and turbulent flow.

The evaluation of the waterflow from the supply to the last branch line in the system is illustrated in Exhibit 27.3. Tee A is included with the 1½ in. (40 mm) starting piece. Tee B is included with the 2 in. (50 mm) riser nipple. Tees C and D are not included because the flow travels straight through those tees. Tee E is included with the 3 in. (80 mm) piece of cross main.

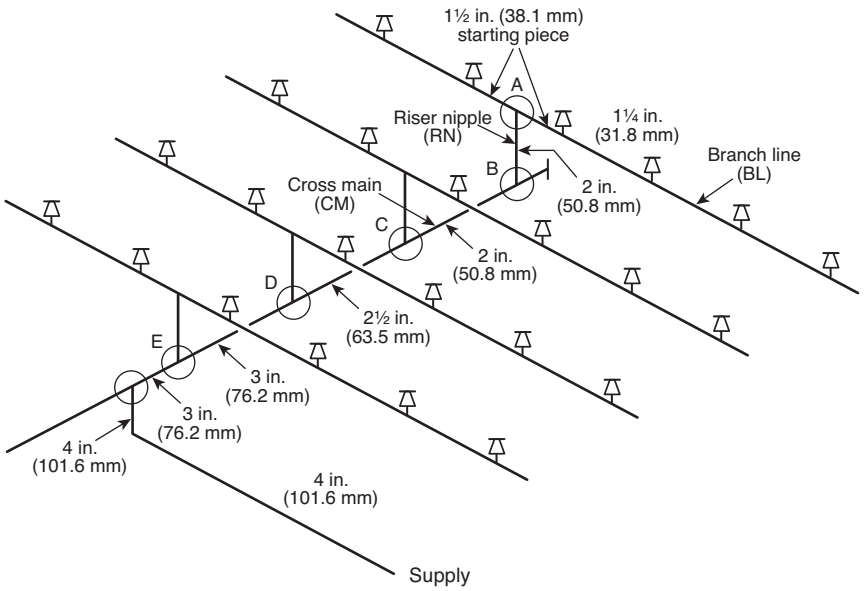

EXHIBIT 27.3 *Typical Sprinkler System Used in Making Sample Calculations.*

With regard to 27.4.8.1(9), on branch lines with upright or pendent sprinklers screwed into the line tee, the friction losses associated with the line tee are permitted to be excluded from the calculations. This is based on the assumption that one fitting would be included in the approval tests of a sprinkler with the presence of that fitting being accounted for as part of the sprinkler's K-factor. This assumption might not be universally correct, particularly with larger orifice sprinklers operating at higher pressure; however, the allowance for omission is still permitted.

Where sprinklers are installed on sprigs or drops, the reducing coupling at the sprinkler is permitted to be ignored, but the tee on the branch line must be included. In this situation, an equivalent K-factor for the entire assembly, which includes the tee fitting, the sprig or drop, and the sprinkler, could be determined as allowed by 27.2.2.4.3 and 27.2.2.5. See the commentary following 27.2.2.4.3 for additional discussion. The equivalent K-factor allows individual calculations to be simplified for each junction between the branch line and the sprig.

With regard to 27.2.4.8.1(10), pressure-reducing devices are installed where system pressures are in excess of the system component's pressure rating. Some components are limited to a maximum working pressure of 175 psi (12 bar). These devices act to intentionally reduce the available pressure, so that system components will not be damaged by high pressures. The manufacturer's instructions must be closely followed to establish the correct outlet pressure and flow parameters.

NFPA 13 requires the use of the Hazen-Williams formula to determine friction losses (pressure losses between pipe segments) in water-filled piping (see 27.2.2.1.1 for the formula). One variable in this formula is represented by *C*. This variable, often referred to as the *C* value, is a coefficient that reflects the roughness of the internal surface of the piping material. The lower the *C* value, the rougher the inner surface of the pipe material.

EDUFIRE.IR

C values for steel and iron pipe materials tend to decrease with time, due to the buildup of scale and the effects of corrosion. The values shown in Table 27.2.4.8.1 include *C* values for aged pipe. If pipe could remain in its original condition after installation, the *C* factors would be somewhat higher than those shown in Commentary Table 27.2. A comparison between new pipe *C* factors and the design *C* factors required by NFPA 13 is shown in Commentary Table 27.2. For ferrous and cement-lined products, an adjustment is applied to compensate for the aging of the pipe.

COMMENTARY TABLE 27.2 *Comparison of C Values for New Pipe*

Pipe Type	*C Value New Pipe*	*C Value Design*	*Upscale Factor (%)*
Steel (welded or seamless)	140	120*	16
Unlined and ductile iron	130	100	23
Plastic	150	150	0
Copper	150	150	0
Cement-lined cast iron	150	140	7

*Wet pipe system.

Factors that can affect the *C* value for a particular piece of pipe include the pipe's manufacturing process, the rate of pipe corrosion, and the buildup of scale and other materials that decrease the inside diameter of the pipe. The synergistic effect of these contributing factors is accounted for by reducing the pipe's *C* value.

Pipe manufacturing techniques do not usually produce a perfectly round piece of pipe, and some inherent imperfections exist. However, the imperfections are usually subtle and cannot be detected without precise measurements being taken.

Corrosion of ferrous materials is difficult to prevent in sprinkler systems. Degradation of pipe caused by corrosion can actually cause a slight increase in the internal diameter of the pipe. However, the effects of corrosion should not be considered as having a positive effect on system performance. Corrosion causes the internal surface of the pipe to become much rougher, thus increasing the associated pressure loss due to friction.

Tuberculation of pipe is a function of the naturally occurring elements and chemicals added to the water supply by the water purveyor. The waterborne chemicals can fall out over time and cause buildups on the internal portions of the pipe network. The result is a rougher internal pipe surface and a smaller internal diameter.

If the Darcy-Weisbach method of calculations is to be used as an alternative to Hazen-Williams to calculate an antifreeze system or to comply with NFPA 11 or NFPA 16, standardized values for degradation of the pipe's interior condition will need to utilize the appropriate Ɛ-factors provided in Table A.27.2.4.8.2.

SEE ALSO

The "Simple Loop Calculations" feature at the end of this chapter (pp. 1106–1107).

Table 27.2.4.8.1 includes the types of materials commonly used in the design and installation of sprinkler systems. If the water quality is poor and the pipe deteriorates faster than would be expected in most water supplies, further adjustments to the *C* value should be made. Commentary Table 27.2 identifies the adjustments (safety factors) used for a particular type of pipe material. Because plastic and copper piping materials do not experience the same effects as ferrous pipe, their *C* values are not adjusted.

27.2.4.8.1 Pipe friction loss shall be calculated in accordance with the Hazen–Williams formula with *C* values from Table 27.2.4.8.1, as follows:

(1) Pipe, fittings, and devices such as valves, meters, flow switches in pipes 2 in. (50 mm) or less in size, and strainers shall be included, and elevation changes that affect the sprinkler discharge shall be calculated.
(2) Tie-in drain piping shall not be included in the hydraulic calculations.
(3) The loss for a tee or a cross shall be calculated where flow direction change occurs based on the equivalent pipe length of the piping segment in which the fitting is included.
(4) The tee at the top of a riser nipple shall be included in the branch line, the tee at the base of a riser nipple shall be included in the riser nipple, and the tee or cross at a cross main–feed main junction shall be included in the cross main.
(5) Fitting loss for straight-through flow in a tee or cross shall not be included.

EDUFIRE.IR

(6) The loss of reducing elbows based on the equivalent feet value of the smallest outlet shall be calculated.
(7) The equivalent feet value for the standard elbow on any abrupt 90-degree turn, such as the screw-type pattern shall be used.
(8) The equivalent feet value for the long-turn elbow on any sweeping 90-degree turn, such as a flanged, welded, or mechanical joint-elbow type, shall be used. *(See Table 27.2.3.1.1.)*
(9) Friction loss shall be excluded for the fitting directly connected to a sprinkler.

If an extension is used with a tee, that tee must be included in the hydraulic calculations. The allowance to use an extension is restricted to sprinklers with a relative low discharge volume, which most likely will be used for minor adjustments to interface with the ceiling.

(10) Losses through a pressure-reducing valve shall be included based on the normal inlet pressure condition. Pressure loss data from the manufacturer's literature shall be used.

TABLE 27.2.4.8.1 *Hazen–Williams C Values*

Pipe or Tube	*C Value**
Unlined cast or ductile iron	100
Black steel (dry systems including preaction)	100
Black steel (wet systems including deluge)	120
Galvanized steel (dry systems including preaction)	100
Galvanized steel (wet systems including deluge)	120
Plastic (listed) all	150
Cement-lined cast- or ductile iron	140
Copper tube, brass or stainless steel	150
Asbestos cement	140
Concrete	140

*The authority having jurisdiction is permitted to allow other *C* values.

DESIGNER'S CORNER [27.2.4.8.1]

Is galvanized pipe required for all dry pipe and preaction systems?

Galvanized pipe has never been required for all dry pipe or preaction systems. The use of galvanized piping was required in the 2013 and some earlier editions of NFPA 13 on dry and preaction systems utilizing CMSA sprinklers; however, that provision was removed as part of the 2016 edition of NFPA 13.

Prior to the 2013 edition, NFPA encouraged the use of galvanized pipe with dry and preaction systems. The values in Table 27.2.4.8.1 allowed a 20 percent increase in the Hazen-Williams *C* factor from 100 to 120 when galvanized pipe was used in dry pipe and preaction systems. Because the *C* factor is raised to the 1.85 power in the Hazen-Williams formula, that allows a 40 percent decrease in friction loss per foot in a section of pipe — a significant advantage.

In the 2013 edition of NFPA 13, the Technical Committee on Sprinkler System Discharge Criteria decided that real-world experience with galvanized pipe did not warrant this drastic hydraulic advantage. Sprinkler contractors performing inspections in accordance with NFPA 25 have reported seeing extreme amounts of corrosion in galvanized dry pipe and preaction systems. While the amount of corrosion they are seeing is not continuous all over the pipe, it is difficult to justify an increase in the *C* factor when the pipe is still corroding. So, the *C* factor was decreased from 120 to 100, making it the same as the *C* factor for plain black steel pipe.

Some people have been advocating that a *C* factor of 120 should apply where nitrogen rather than air is used in the system. While the use of nitrogen certainly helps the corrosion situation, the committee is concerned that nitrogen will not always be used. If the nitrogen proves too expensive, the owner could easily disconnect the nitrogen source and switch to air. If that were to happen, the system would have to be calculated in accordance with the rules for air, which is a *C* factor of 100.

When steel pipe is used in a dry pipe or preaction system, the *C* factor must be 100 whether or not the pipe is galvanized and regardless of the gas (air or nitrogen) used in the system. It is possible that a future analysis of galvanization techniques might yield an answer as to why corrosion is seen in many galvanized pipes, which might lead to a change in the *C* factor for galvanized pipe in dry pipe or preaction systems. But until that time, the *C* factor must be 100 for these systems.

EDUFIRE.IR

27.2.4.8.2* For antifreeze systems greater than 40 gal (150 L) in size, the pipe friction loss shall be calculated using the Darcy-Weisbach equation shown in 27.2.2.1.3 using a Moody diagram and $\mathcal{E}$-factors that are representative of aged pipe otherwise following the methodology presented in 27.2.4.8.1.

A.27.2.4.8.2 See Figure A.27.2.4.8.2 for a Moody diagram and Table A.27.2.4.8.2 for $\mathcal{E}$-factors that correspond to Hazen–Williams *C* factors. The corresponding Hazen-Williams *C* factor should be used for the calculation of equivalent pipe length in accordance with 27.2.3.

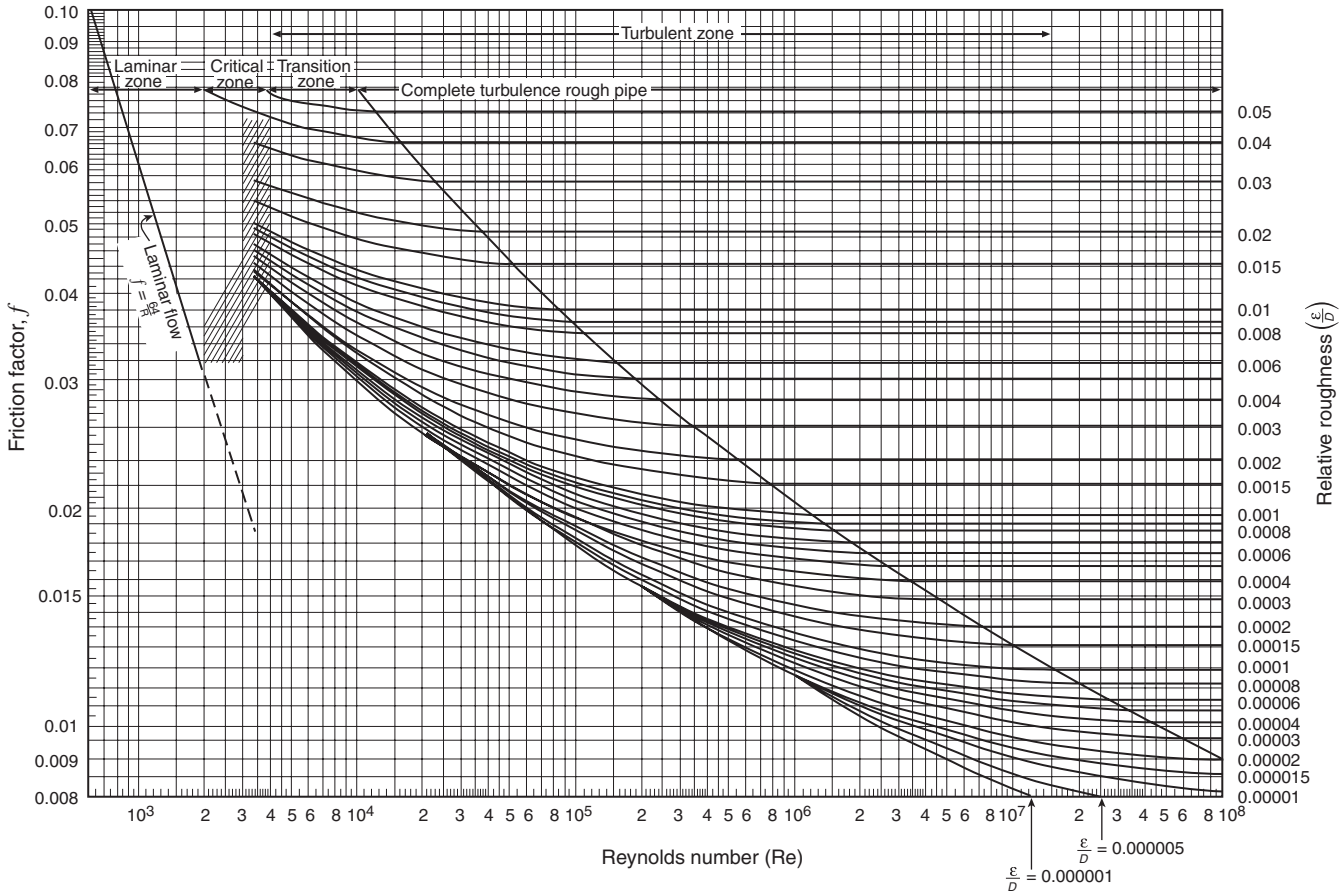

FIGURE A.27.2.4.8.2 *Moody Diagram.*

TABLE A.27.2.4.8.2 *Suggested $\mathcal{E}$-Factor for Aged Pipe*

Pipe	*Hazen–Williams C Factor*	*$\mathcal{E}$-Factor [in. (mm)]*
Steel (new)	143	0.0018 (0.045)
Steel	120	0.004 (0.100)
Steel	100	0.015 (0.375)
Copper	150	0.000084 (0.0021)
Plastic	150	0.000084 (0.0021)

For SI units, 1 in. = 25 mm.

EDUFIRE.IR

27.2.4.9* Orifice Plates.

A.27.2.4.9 The use of sprinklers with differing K-factors in situations where different protection areas are needed is not considered balancing. An example would be a room that could be protected with sprinklers having different orifice sizes in closets, foyers, and room areas. However, this procedure introduces difficulties when restoring a system to service after operation since it is not always clear which sprinklers go where.

27.2.4.9.1 Orifice plates shall not be used for balancing the system.

FAQ [27.2.4.9.1]

Why are orifice plates prohibited by 27.2.4.9.1?

Orifice plates are prohibited because they can be removed while modifying a system and not be reinstalled. Such removal would invalidate the hydraulic calculations supporting the initial system design. Also, if installed in a horizontal run of pipe, orifice plates are subject to the accumulation of debris on the surface facing the direction of waterflow. This accumulation would further affect the hydraulics as well as impede proper system drainage.

27.2.4.9.2 Unless the requirements of 27.2.4.9.3 or 27.2.4.9.4 are met, mixing of sprinklers of different K-factors by reducing the K-factor of adjacent sprinklers on the same branch line leading back to the main for the purpose of minimizing sprinkler over discharge shall not be permitted.

In general, the use of sprinklers with differing K-factors is usually discouraged. The main reason is that if a sprinkler needs to be replaced in the future, a sprinkler of the wrong K-factor could be put in place if multiple K-factor sprinklers are in the same system or compartment. In the past the use of different sized threads on the sprinkler frame for different K-factor sprinklers were used to minimize that concern; however, with the current array of available K-factor sprinklers being available with the same sized thread, this is no longer the case. A specific identification of the sprinkler orifice size would need to be determined from the sprinkler identification number (SIN) or the model number for the sprinkler.

NFPA 13 does permit the use of different K-factor sprinklers in the following situations:

1. Exposure protection systems — Different K-factor sprinklers can be used to help distribute water evenly over the surface being protected.
2. Small rooms — Smaller K-factor sprinklers can be used in small rooms to minimize the flow from the sprinklers. In closets, bathrooms, and other small spaces, a larger K-factor sprinkler would discharge more water than necessary to achieve the density needed to cover the small floor area. It must be kept in mind, however, that sprinklers with a K-factor less than 5.6 can be used only in a light hazard occupancy.
3. Directional discharge — In some cases, a designer might want to achieve a specific outcome by throwing water in a particular direction. A sprinkler with a different K-factor can achieve that effect.
4. Extended coverage sprinklers — Extended coverage sprinklers and standard spray sprinklers can be mixed in a system to protect the entire floor area economically. Different extended coverage sprinklers can also be used on the same system to economically cover the space.
5. Residential sprinklers — As with extended coverage sprinklers, it is sometimes necessary to mix different K-factor residential sprinklers to economically cover the space.

The committee sees no reason to prohibit the kinds of installation discussed in 27.2.4.9.3 and 27.2.4.9.4 as long as the sprinklers are installed in accordance with their listing and the water supply can deliver the required flow and pressure to the sprinklers.

An example of the application of 27.2.4.9.3 is illustrated in Exhibit 27.4. The center portions of the room can be protected with extended coverage sprinklers that have a nominal K-factor of K-8.0. However, the space under the 3 ft (0.9 m) wide soffit also needs to be protected. Because the areas under the soffits are so small, 27.2.4.9.3 permits the use of a sprinkler with a different K-factor.

27.2.4.9.3 Sprinklers with different K-factors shall be acceptable for special use such as exposure protection, small rooms or enclosures, or directional discharge. *(See 3.3.196 for definition of small rooms.)*

27.2.4.9.4 Extended-coverage and residential sprinklers with a different K-factor shall be acceptable for part of the protection area where installed in accordance with their listing.

27.2.4.10* Pressures.

A.27.2.4.10 Where the normal pressure (P_n) is used to calculate the flow from an orifice, the following assumptions should be used:

EDUFIRE.IR

EXHIBIT 27.4 Sprinkler Layout Using Multiple K-Factor Approach.

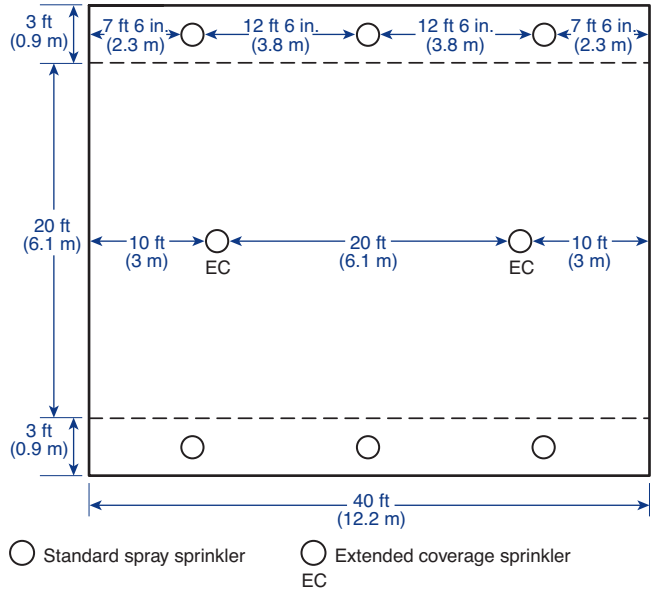

(1) At any flowing outlet along a pipe, except the end outlet, only the normal pressure (P_n) can act on the outlet. At the end outlet, the total pressure (P_t) can act. The following should be considered end outlets:

(a) The last flowing sprinkler on a dead-end branch line
(b) The last flowing branch line on a dead-end cross main
(c) Any sprinkler where a flow split occurs on a gridded branch line
(d) Any branch line where a flow split occurs on a looped system

(2) At any flowing outlet along a pipe, except the end outlet, the pressure acting to cause flow from the outlet is equal to the total pressure (P_t) minus the velocity pressure (P_v) on the upstream (supply) side.

(3) To find the normal pressure (P_n) at any flowing outlet, except the end outlet, assume a flow from the outlet in question and determine the velocity pressure (P_v) for the total flow on the upstream side. Because normal pressure (P_n) equals total pressure (P_t) minus velocity pressure (P_v), the value of the normal pressure (P_n) so found should result in an outlet flow approximately equal to the assumed flow; if not, a new value should be assumed, and the calculations should be repeated.

27.2.4.10.1 When calculating flow from an orifice, the total pressure (P_t) shall be used, unless the calculation method of 27.2.4.10.2 is utilized.

The total pressure, which is addressed in 27.2.4.10.1 and 27.2.4.10.2, acts on the end outlet at the point where the flow enters the sprinkler outlet at the end of a single direction feed branch line or where it enters the sprinkler outlet from opposing directions or a gridded branch line. Velocity pressure is usually small compared to the total pressure and normally does not have a major effect on the overall outcome of the hydraulic calculation.

The decision whether to use the normal pressure or the total pressure to predict the flow from the sprinkler is completely at the discretion of the person performing the hydraulic calculations. Use of the total pressure typically adds a safety factor between 5 percent and 10 percent for flow and pressure demand at the water supply.

EDUFIRE.IR

27.2.4.10.2 Use of the normal pressure (P_n) calculated by subtracting the velocity pressure from the total pressure shall be permitted. Where the normal pressure is used, it shall be used on all branch lines and cross mains where applicable.

When velocity pressure is applied to the calculations, the discharge from the second sprinkler from the end of the branch line is sometimes less than the discharge from the end sprinkler. To correct this deficiency, either the pipe sizing should be changed or the end sprinkler discharge should be slightly increased.

Paragraph 27.2.4.7.6 requires that the discharge from each sprinkler in the design area be calculated based on the pressure acting at that sprinkler. The intent of that requirement is to prevent the calculation of the discharge from each sprinkler in the design area based on the discharge from the most remote sprinkler by manipulating the density/area requirements. For instance, if the hydraulically most demanding sprinkler produces a flow of 20.8 gpm (79 L/min) based on its area of coverage and design density, it is not correct to assume that the remaining sprinklers in the design area will also flow at 20.8 gpm (79 L/min). When water flows through a piping network, pressure changes result throughout the system due to friction, turbulence, and elevation changes. Therefore, the pressures acting at each sprinkler in the design area can vary, resulting in different amounts of flow at each sprinkler. Those pressure changes must be accounted for, thereby increasing the complexity of the hydraulic calculations.

27.2.4.10.3 Flow from a sprinkler shall be calculated using the nominal K-factor except that the manufacturer's adjusted K-factors shall be utilized for dry-type sprinklers.

27.2.4.11 Minimum Operating Pressure.

27.2.4.11.1 Minimum operating pressure of any sprinkler shall be 7 psi (0.5 bar).

27.2.4.11.2 Where a higher minimum operating pressure for the desired application is specified in the listing of the sprinkler, this higher pressure shall be required.

When sprinklers are submitted to testing laboratories for examination and listing, they are subjected to water distribution and fire tests. These tests were traditionally conducted at a minimum flow of 15 gpm (57 L/min) for a K-5.6 [½ in. (25.4 mm)] sprinkler. The pressure required to produce that flow through the sprinkler is approximately 7 psi (0.5 bar), as illustrated in the equation that follows. The requirement recognizes that specially listed sprinklers might have minimum operating pressures greater than 7 psi (0.5 bar). In some cases, the minimum operating pressure can be as high as 75 psi (1.93 bar).

$$P = \frac{Q^2}{K^2} = \frac{15^2}{5.6^2} = 7.17 \text{ psi (0.5 bar)}$$

In previous years, some sprinklers were listed with operating pressures less than 7 psi (0.5 bar). NFPA 13 no longer permits such pressures. The concern was that, at lower pressures, sprinklers that had been installed for an extended period of time would not operate properly. The minimal force created by the low pressure might not be sufficient to blow the orifice cap off the sprinkler when the sprinkler link activates. Another concern was that sprinklers operating at pressures less than 7 psi (0.5 bar) might produce unsuitable discharge patterns.

27.2.4.12 Maximum Operating Pressure. For extra hazard occupancies, palletized, solid-piled, bin box, back-to-back shelf storage, shelf storage, or rack storage, the maximum operating pressure of any sprinkler shall be 175 psi (12 bar).

FAQ [27.2.4.12]

Why does NFPA 13 limit the maximum pressure to 175 psi (12 bar)?

The requirements for a maximum operating pressure are addressed in 27.2.4.12. In extra hazard occupancies or higher challenge fire risks, excessive discharge pressures could adversely affect the effectiveness of sprinkler discharge in high-challenge fire conditions. At high pressure, water leaving the sprinkler orifice affects the sprinkler deflector at high velocity and breaks up into tiny water droplets. Those droplets might not have the momentum to penetrate the fire plume common in extra hazard and storage fires. The maximum pressure limit does not apply to light and ordinary occupancy hazards; however, components utilized at higher pressures, including sprinklers, must be rated for such high pressure applications.

27.2.5 In-Rack Sprinklers.

27.2.5.1 Pipes to in-rack sprinklers shall be sized by hydraulic calculations.

27.2.5.2 Water demand of sprinklers installed in racks or water curtains shall be added to the ceiling sprinkler water demand at the point of connection. Demands shall be balanced to the higher pressure.

As a general rule, the flow and pressure demand associated with in-rack sprinklers must be hydraulically balanced to the higher pressure in the same manner that is required for branch lines on opposite sides of

EDUFIRE.IR

a cross main. For some specific commodities stored in racks, the protection criteria do not require the in-rack sprinkler water demand to be added to the ceiling system demand. Examples include those permitted in Section 25.8 as well as certain combustible liquids in plastic containers protected in accordance with NFPA 30. This protection criterion generally employs combinations of in-rack sprinklers and solid barriers throughout the rack that are intended to operate independent of the installed ceiling sprinkler protection. In those circumstances, the most demanding flow from either the ceiling sprinkler system or the in-rack sprinkler system must be met. Where in-rack sprinklers are balanced, there are multiple acceptable locations for the point of connection, from the cross main directly over the racks to the system riser manifold, depending on the number of in-rack sprinklers supplied by the system. The separate water demands are still balanced, even at a remote point of connection.

It is important to note that the in-rack sprinkler demand is required to be balanced with the ceiling sprinkler demand in the same area as the in-rack sprinklers. This is representative of the operation of sprinklers at the ceiling within the vicinity of a fire occurring within the racks containing the in-rack sprinklers. If the remote area of a warehouse has only ceiling sprinklers, and a portion of the warehouse has in-rack sprinklers closer to the water supply, the in-rack sprinkler demand does not need to be balanced with the remote area ceiling demand. Instead, the most remote/demanding area of the ceiling sprinklers over the in-rack sprinklers needs to be calculated and added to the in-rack sprinkler, balanced to the higher pressure.

27.3 Hose Allowance.

Water allowance for outside hose shall be added to the sprinkler and inside hose requirement at the connection to the city water main or a yard hydrant, whichever is closer to the system riser.

27.4 Hydraulic Calculation Forms.

27.4.1 General. Hydraulic calculations shall be prepared on form sheets that include a summary sheet, detailed worksheets, and a graph sheet. *[See Figure A.27.4.2(a), Figure A.27.4.3, and Figure A.27.4.4 for copies of typical forms.]*

The calculation forms in the Annex A material associated with Section 27.4 are tools to help monitor the waterflow through the system, to summarize system design information, and to allow for a quick evaluation of the system. As illustrated in Figure A.27.4.2(c), waterflow through the system is tracked in a direction opposite to that of the actual waterflow; that is, the first evaluation point begins at the hydraulically most demanding sprinkler — often the sprinkler farthest from the system riser — and ends at the point of connection to the system water supply. The calculation forms allow the designer or other persons reviewing the plans to account for individual pipe lengths and fittings and to keep track of changes in pressure and flow that result from friction loss and elevation changes. Figure A.27.4.2(c) and Figure A.27.4.3 are for use with sprinkler systems calculated by hand. For sprinkler systems calculated with computer programs, a standardized printout is mandated by 27.4.5.

FAQ [27.4.2]

How is the area of operation affected by the size of the building?

The area of sprinkler operation is independent of the total area of the building. For example, when a design area of 1500 ft^2 (139 m^2) is selected for an office building, the fire is anticipated to be controlled to an operating sprinkler area no larger than 1500 ft^2 (139 m^2), regardless of the size of the building.

27.4.2* Summary Sheet. The summary sheet shall contain the following information, where applicable:

(1) Date
(2) Location
(3) Name of owner and occupant
(4) Building number or other identification
(5) Description of hazard (for storage applications, the commodity classification, storage height, and rack configuration shall be included)
(6) Name and address of contractor or designer
(7) Name of approving agency

EDUFIRE.IR

(8) System design requirements, as follows:
   (a) Design area of water application, ft^2 (m^2).
   (b) Minimum rate of water application (density), gpm/ft^2 (mm/min). Where sprinklers are listed with minimum water application in gpm (L/min) or pressure in psi (bar), the minimum rate of water application shall be indicated in gpm (L/min) or pressure, psi (bar).
   (c) Area per sprinkler, ft^2 (m^2).
(9) Total water requirements as calculated, including allowance for inside hose, outside hydrants, and water curtain and exposure sprinklers
(10) Allowance for in-rack sprinklers, gpm (L/min)
(11) Limitations (dimension, flow, and pressure) on extended coverage or other listed special sprinklers

A.27.4.2 See Figure A.27.4.2(a) through Figure A.27.4.2(d).

Hydraulic Calculations

for

ABC Company, employee garage

7499 Franklin Road

Charleston, SC

Contract No. 4001

Date 1 – 7 – 08

Design data:

Occupancy classification ORD. GR. 1

Density 0.15 gpm/ft^2 (6.1 mm/min/m^2)

Area of application 1500 ft^2 (139 m^2)

Coverage per sprinkler 130 ft^2 (12.1 m^2)

Special sprinklers _____

No. of sprinklers calculated 12

In-rack demand _____

Hose streams 250 gpm (950 lpm)

Total water required 510.4 gpm (1930 lpm) including hose streams

Name of contractor _____

Name of designer _____

Address _____

Authority having jurisdiction _____

FIGURE A.27.4.2(a) *Summary Sheet.*

The summary sheet shown in Figure A.27.4.2(a) is normally used as the cover sheet for the calculations and contains the information required by 27.4.2 for the system design parameters. This information is useful in estimating the total amount of water needed for the sprinkler system demand.

The area of sprinkler operation is selected from the density/area curves shown in Figure 19.3.3.1.1 or the appropriate criteria in Chapter 20 through Chapter 25.

EDUFIRE.IR

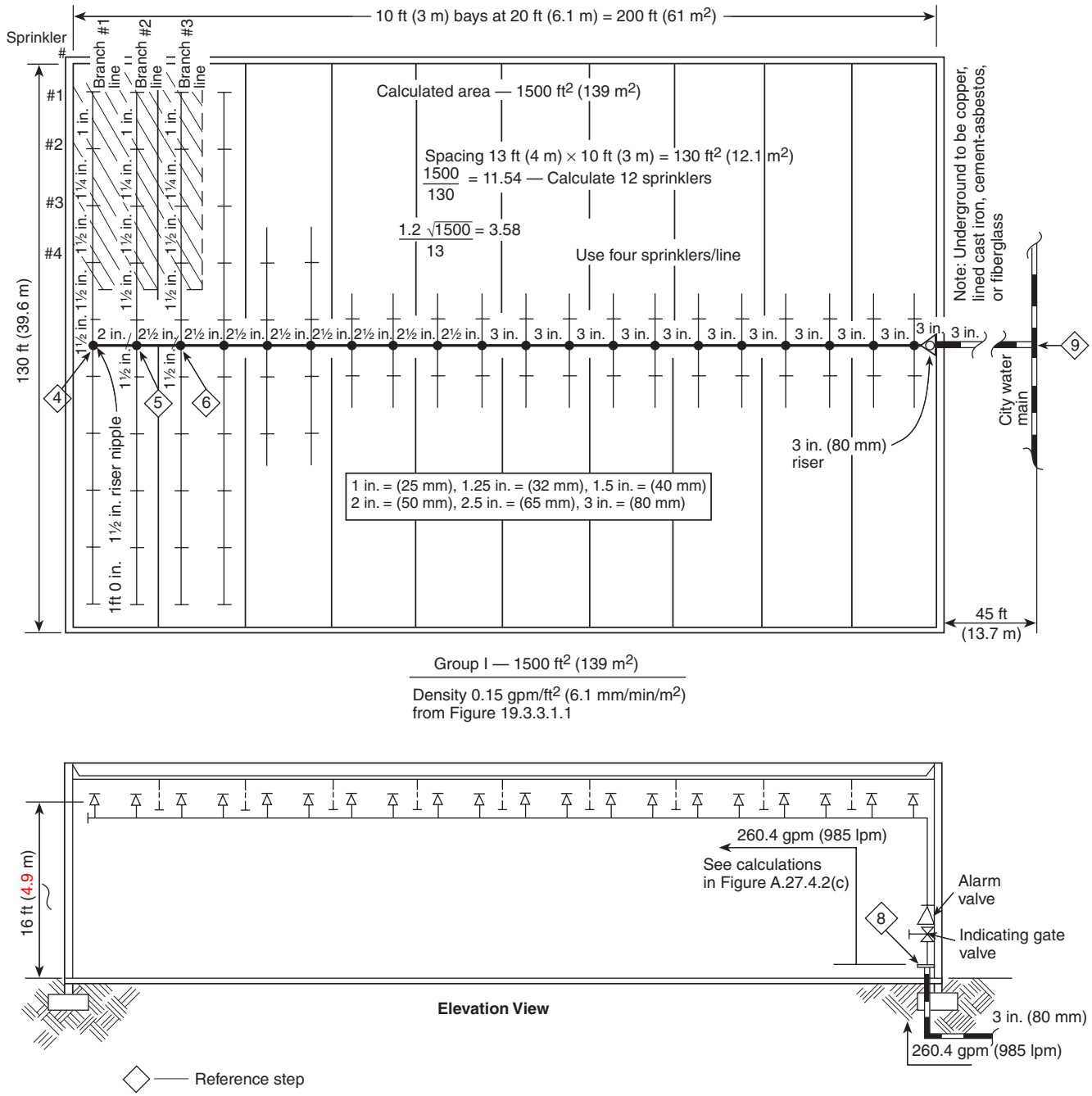

FIGURE A.27.4.2(b) *Hydraulic Calculation Example (Plan View and Elevation View).*

In actual fires, it is common for the sprinkler system to control the fire with fewer sprinklers open than anticipated by satisfying the design area requirements of NFPA 13. Safety factors are incorporated in the design approach and the calculation technique to account for uncertainties, such as the potential for a fire to be shielded from sprinkler discharge or a plugged sprinkler. Additionally, the design approach anticipates the relative worst-case fire for each occupancy hazard.

Selecting the hydraulically most demanding area of operation for calculation ensures that an area located hydraulically closer to the water supply will also control the fire. In buildings containing two or

EDUFIRE.IR

Contract Name GROUP I 1500 ft² (139 m²) Sheet 2 Of 3

Step No.	Nozzle Ident. and Location		Flow in gpm (lpm)	(mm) Pipe Size	Pipe Fittings and Devices	Equiv. Pipe Length (m)	Friction Loss psi Foot	(bar) Pressure Summary	Normal Pressure	D = 0.15 gpm/ft² Notes K = 5.6	Ref. Step
1	1	BL-1	q Q 19.5 (74)	1 in. (25 mm)		L 13 ft (4 m) F T 13 ft (4 m)	C=120 0.124	P_t 12.1 P_e P_f 1.6	P_t P_v P_n	Q = 130 x 0.15 = 19.5 (74 lpm) P = (19.5/5.6)² = 12.1 psi (0.83 bar)	
2	2		q 20.7 (78.4) Q 40.2 (152.2)	1 1/4 in. (32 mm)		L 13 ft (4 m) F T 13 ft (4 m)	0.125	P_t 13.7 P_e P_f 1.6	P_t P_v P_n	$q = 5.6\sqrt{13.7}$	
3	3		q 21.9 (83) Q 62.1 (235.1)	1 1/2 in. (40 mm)		L 13 ft (4 m) F T 13 ft (4 m)	0.131	P_t 15.3 P_e P_f 1.7	P_t P_v P_n	$q = 5.6\sqrt{15.3}$	4
4	4	DN RN	q 23.1 (87.4) Q 85.2 (322.5)	1 1/2 in. (40 mm)	2T-16	L 20.5 ft (6.2 m) F 16 ft (4.8 m) T 36.5 ft (11 m)	0.236	P_t 17.0 P_e 0.4 P_f 8.6	P_t P_v P_n	$q = 5.6\sqrt{17}$ $P_e = 1 \times 0.433$	5
5		CM TO BL-2	q Q 85.2 (322.5)	2 in. (50 mm)		L 10 ft (3 m) F T 10 ft (3 m)	0.07	P_t 26.0 P_e P_f 0.7	P_t P_v P_n	$K = \frac{85.2}{\sqrt{26}}$ K = 16.71	
6		BL-2 CM TO BL-3	q 86.3 (326.7) Q 171.5 (549.2)	2 1/2 in. (65 mm)		L 10 ft (3 m) F T 10 ft (3 m)	0.107	P_t 26.7 P_e P_f 1.1	P_t P_v P_n	$q = 16.71\sqrt{26.7}$	6
7		BL-3 CM	q 88.1 (333.5) Q 259.6 (982.7)	2 1/2 in. (65 mm)		L 70 ft (21 m) F T 70 ft (21 m)	0.231	P_t 27.8 P_e P_f 16.2	P_t P_v P_n	$q = 16.7\sqrt{27.8}$	
8		CM TO FIS	q Q 259.6 (982.7)	3 in. (80 mm)	E5 AV15 GV1	L 119 ft (36 m) F 21 ft (6.4 m) T 140 ft (43 m)	0.081	P_t 44.0 P_e 6.5 P_f 11.2	P_t P_v P_n	$P_e = 15 \times 0.433$	8
9		THROUGH UNDER-GROUND TO CITY MAIN	q Q 259.6 (982.7)	3 in. (80 mm)	E5 GV1 T15	L 50 ft (15 m) F 27.6 ft (8.4 m) T 77.6 ft (24 m)	C=150 TYPE'M' 0.061	P_t 61.7 P_e P_f 4.7	P_t P_v P_n	$F = F_{40} \times 1.51 \times F_c$ $F_c = [2.981/3.068]^{4.87} = 0.869$ F = 21 x 1.51 x 0.869 F = 27.6	9
			q Q			L F T		P_t 66.4 P_e P_f	P_t P_v P_n		
			q Q			L F T		P_t P_e P_f	P_t P_v P_n		
								P_t			

FIGURE A.27.4.2(c) Hydraulic Calculations.

more occupancy hazards, multiple sets of hydraulic calculations usually are necessary to verify that each hazard is adequately protected.

27.4.3* Detailed Worksheets. Detailed worksheets or computer printout sheets shall contain the following information:

(1) Sheet number
(2) Sprinkler description and discharge constant (*K*)
(3) Hydraulic reference points

EDUFIRE.IR

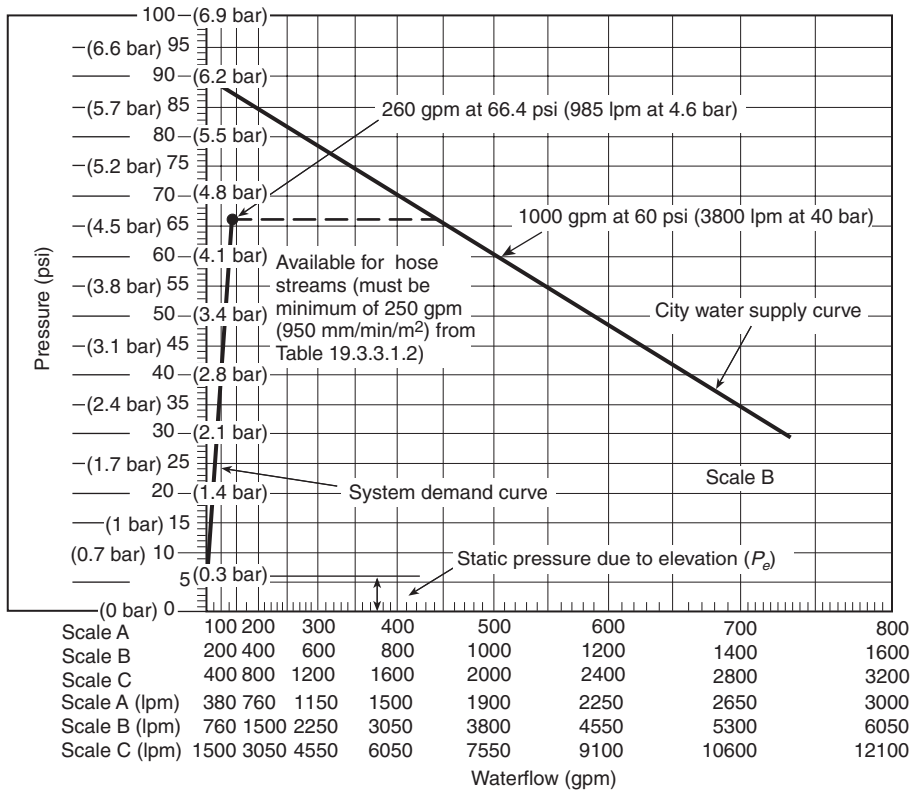

FIGURE A.27.4.2(d) *Hydraulic Graph.*

(4) Flow in gpm (L/min)
(5) Pipe size
(6) Pipe lengths, center-to-center of fittings
(7) Equivalent pipe lengths for fittings and devices
(8) Friction loss in psi/ft (bar/m) of pipe
(9) Total friction loss between reference points
(10) In-rack sprinkler demand balanced to ceiling demand
(11) Elevation head in psi (bar) between reference points
(12) Required pressure in psi (bar) at each reference point
(13) Velocity pressure and normal pressure if included in calculations
(14) Notes to indicate starting points or reference to other sheets or to clarify data shown
(15)* Diagram to accompany gridded system calculations to indicate flow quantities and directions for lines with sprinklers operating in the remote area

A.27.4.3(15) See Figure A.27.4.3(15).

(16) Combined K-factor calculations for sprinklers on drops, armovers, or sprigs where calculations do not begin at the sprinkler

A.27.4.3 See Figure A.27.4.3.

Figure A.27.4.3 illustrates just one of several worksheets used in the sprinkler industry to track the waterflow and hydraulic characteristics of the system. The form allows the calculation procedure to be followed from the last sprinkler in the hydraulically most remote area to the point in the system where the water supply is connected. Pipe diameters, fittings, and friction loss values are tabulated based on the information retrieved from the worksheet. This worksheet can be used for calculations performed by hand. For computer programs, NFPA 13 now mandates a uniform printout that is similar to this format.

EDUFIRE.IR

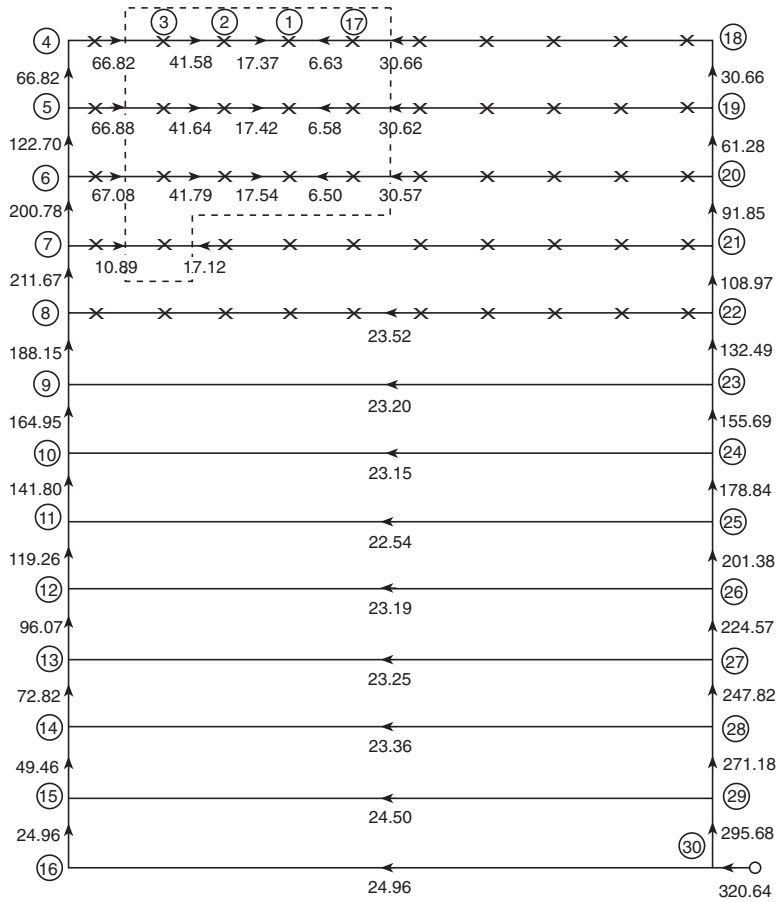

FIGURE A.27.4.3(15) *Example of Hydraulically Remote Area — Grid System.*

Figure A.27.4.3(15) depicts a gridded system that has been calculated. The dashed lines outline the calculated area, and the numbers in circles are reference points. The arrows on the pipe indicate the flow directions, and the numbers alongside indicate quantity in gallons per minute. The flow directions are of particular importance in a gridded system, due to the various flow paths that the water can take from the source to the operating sprinklers.

To facilitate the review of a proposed system, a diagram similar to Figure A.27.4.3(15) must accompany hydraulic calculations for a gridded system. Most of the commonly used software programs available today can produce similar flow diagrams.

27.4.4* Graph Sheet. A graphic representation of the complete hydraulic calculation shall be plotted on semiexponential graph paper ($Q^{1.85}$) and shall include the following:

(1) Water supply curve
(2) Sprinkler system demand
(3) Hose allowance (where applicable)
(4) In-rack sprinkler demand (where applicable)

A.27.4.4 See Figure A.27.4.4.

The graph sheet in Figure A.27.4.4 is used to plot the water supply curve and the sprinkler system demand. The graph sheet is referred to as hydraulic graph paper. The scale along the abscissa (x-axis) must be to the power of 1.85 because, in the Hazen-Williams formula, pressure (p) is proportional to the flow (Q) to the

EDUFIRE.IR

Contract no. _____ Sheet no. _____ of _____

Name and location _____

Reference	Nozzle type and location	Flow in gpm (L/min)	Pipe size (in.)	Fitting and devices	Pipe equivalent length	Friction loss psi/ft (bar/m)	Required psi (bar)	Normal Pressure	Notes
		q			length		P_t	P_t	
					fitting		P_f	P_v	
		Q			total		P_e	P_n	
		q			length		P_t	P_t	
					fitting		P_f	P_v	
		Q			total		P_e	P_n	
		q			length		P_t	P_t	
					fitting		P_f	P_v	
		Q			total		P_e	P_n	
		q			length		P_t	P_t	
					fitting		P_f	P_v	
		Q			total		P_e	P_n	
		q			length		P_t	P_t	
					fitting		P_f	P_v	
		Q			total		P_e	P_n	
		q			length		P_t	P_t	
					fitting		P_f	P_v	
		Q			total		P_e	P_n	
		q			length		P_t	P_t	
					fitting		P_f	P_v	
		Q			total		P_e	P_n	
		q			length		P_t	P_t	
					fitting		P_f	P_v	
		Q			total		P_e	P_n	
		q			length		P_t	P_t	
					fitting		P_f	P_v	
		Q			total		P_e	P_n	
		q			length		P_t	P_t	
					fitting		P_f	P_v	
		Q			total		P_e	P_n	
		q			length		P_t	P_t	
					fitting		P_f	P_v	
		Q			total		P_e	P_n	
		q			length		P_t	P_t	
					fitting		P_f	P_v	
		Q			total		P_e	P_n	
		q			length		P_t	P_t	
					fitting		P_f	P_v	
		Q			total		P_e	P_n	
		q			length		P_t	P_t	
					fitting		P_f	P_v	
		Q			total		P_e	P_n	
		q			length		P_t	P_t	
					fitting		P_f	P_v	
		Q			total		P_e	P_n	
		q			length		P_t	P_t	
					fitting		P_f	P_v	
		Q			total		P_e	P_n	
		q			length		P_t	P_t	
					fitting		P_f	P_v	
		Q			total		P_e	P_n	
		q			length		P_t	P_t	
					fitting		P_f	P_v	
		Q			total		P_e	P_n	
		q			length		P_t	P_t	
					fitting		P_f	P_v	
		Q			total		P_e	P_n	

P_t: total pressure. P_f: friction loss pressure. P_v: velocity pressure. P_e: elevation pressure.

© 2018 National Fire Protection Association NFPA 13

FIGURE A.27.4.3 *Sample Worksheet.*

EDUFIRE.IR

power of 1.85. Without this exponential adjustment, the water supply graph would form a curve (similar to a fire pump curve) rather than a straight line. The straight line allows the water supply information to be more easily plotted, using two data points.

The flow ($Q^{1.85}$) axis can be multiplied by any number to extend the range of the flow value. For example, if no adjustment is desired, the flow numbers are multiplied by 1. If a flow of 2500 gpm (9463 L/min) must be evaluated, the scale could be multiplied by 3, resulting in an extension of the scale to 3000 gpm (11,355 L/min).

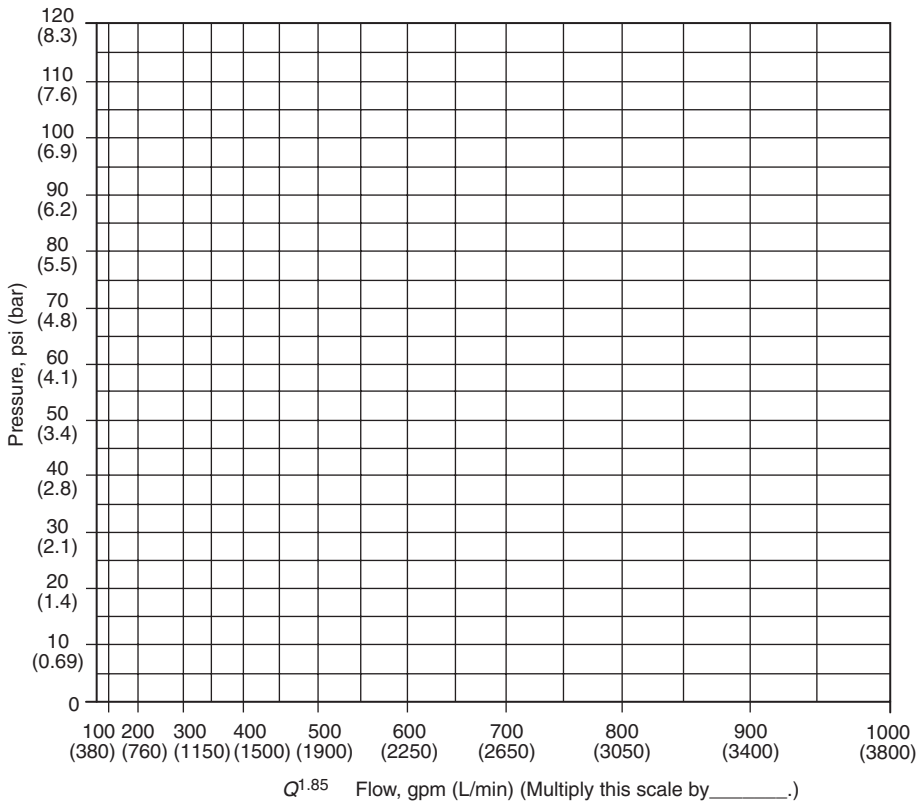

FIGURE A.27.4.4 *Sample Graph Sheet.*

27.4.5 Hydraulic Reports.

Subsection 27.4.5 was added to the 2007 edition of NFPA 13 to standardize the presentation of information output by computer programs that perform hydraulic calculations. Prior to that standardization, all the computer programs provided the same information but in different sequences and different formats, making it difficult for people who work with more than one program, such as plan review officials, to review calculations.

27.4.5.1* General.

A.27.4.5.1 Additional data can be added to any of the forms, provided that the format and order of the original information shown in Figure 27.4.5.1.2(a), Figure 27.4.5.1.2(b), Figure 27.4.5.1.2(c), and Figure 27.4.5.1.2(d) is followed.

27.4.5.1.1 Hydraulic calculations shall be prepared on form sheets that include a summary sheet, a graph sheet, a water supply analysis, a node analysis, and detailed worksheets.

27.4.5.1.2 The data shall be presented in the order shown in Figure 27.4.5.1.2(a) through Figure 27.4.5.1.2(d).

EDUFIRE.IR

HYDRAULIC CALCULATIONS
for

Project name: _____

Location: _____

Drawing no.: _____ Date: _____

Design

Remote area number: _____

Remote area location: _____

Occupancy classification: _____

Density: _____ gpm/ft^2 (mm/min)

Area of application: _____ ft^2 (m^2)

Coverage per sprinkler: _____ ft^2 (m^2)

Type of sprinklers calculated: _____

No. of sprinklers calculated: _____

In-rack demand: _____

Hose streams: _____

Total water required (including hose streams): _____ gpm (mm/min) @ _____ psi (bar)

Type of system: _____

Volume of dry or preaction system: _____ gal (l)

Water supply information

Date: _____

Location: _____

Source: _____

Name of contractor: _____

Address: _____

Phone number: _____

Name of designer: _____

Authority having jurisdiction: _____

Notes: (Include peaking information or gridded systems here.) _____

_____

_____

_____

© 2018 National Fire Protection Association NFPA 13

FIGURE 27.4.5.1.2(a) *Summary Sheet.*

EDUFIRE.IR

FLOW TEST SUMMARY SHEET

$N^{1.85}$

Contract name and number: _____

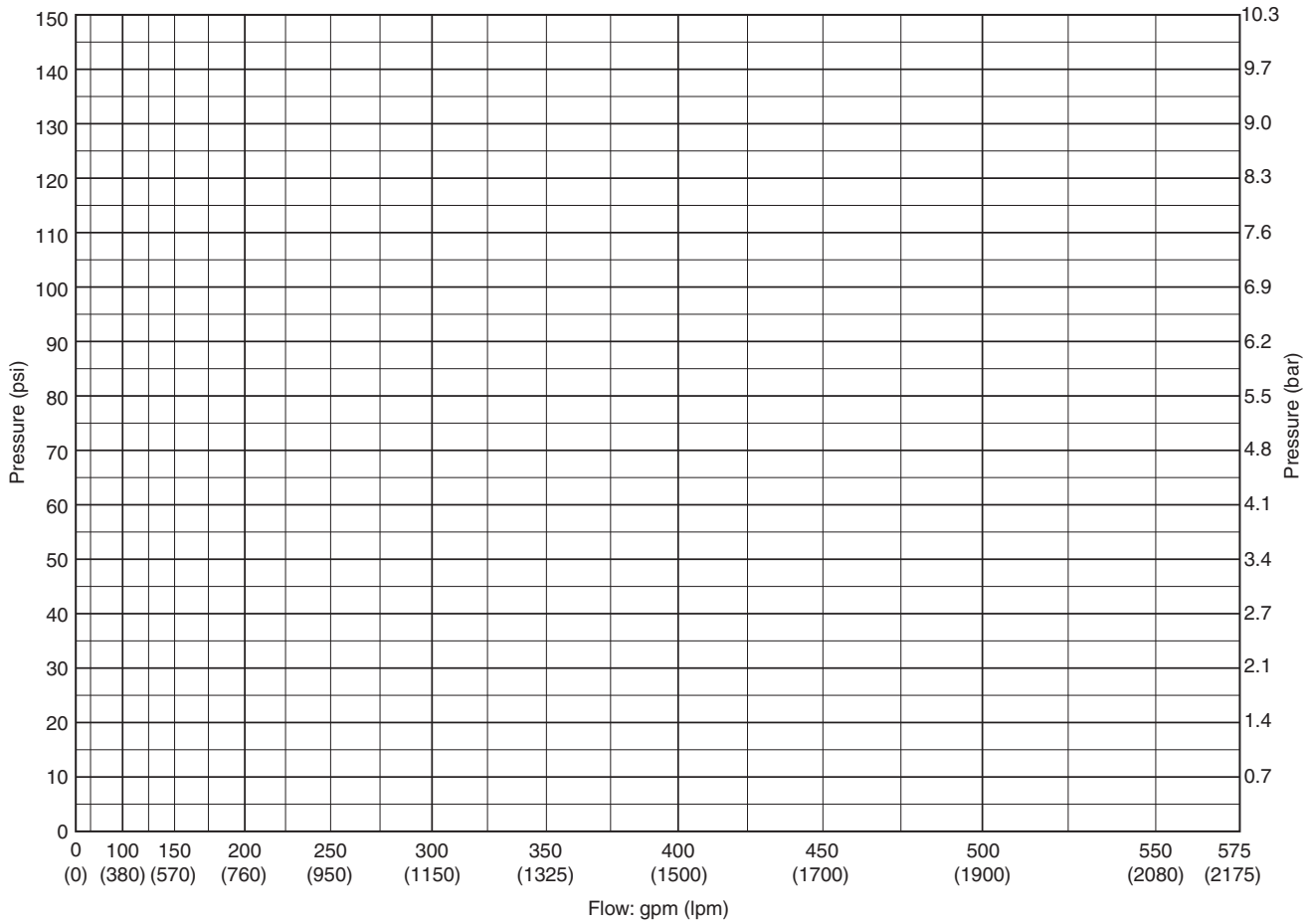

Notes: _____

© 2018 National Fire Protection Association NFPA 13

FIGURE 27.4.5.1.2(b) *Graph Sheet.*

EDUFIRE.IR

SUPPLY ANALYSIS

Node at Source	Static Pressure	Residual Pressure	Flow	Available Pressure	Total Demand	Required Pressure
Data	Data	Data	Data	Data	Data	Data

NODE ANALYSIS

Node Tag	Elevation	Node Type	Pressure at Node	Discharge at Node	Notes
Data	Data	Data	Data	Data	Data
Data	Data	Data	Data	Data	Data
Data	Data	Data	Data	Data	Data
Data	Data	Data	Data	Data	Data
Data	Data	Data	Data	Data	Data
Data	Data	Data	Data	Data	Data
Data	Data	Data	Data	Data	Data
Data	Data	Data	Data	Data	Data
Data	Data	Data	Data	Data	Data
Data	Data	Data	Data	Data	Data
Data	Data	Data	Data	Data	Data
Data	Data	Data	Data	Data	Data
Data	Data	Data	Data	Data	Data
Data	Data	Data	Data	Data	Data

© 2018 National Fire Protection Association NFPA 13

FIGURE 27.4.5.1.2(c) *Supply and Node Analysis Sheet.*

EDUFIRE.IR

Job name: _____ Sheet number: _____

PIPE INFORMATION

Node 1 / Node 2	Elev 1 (ft) (m)	K-Factor	Flow added — this step (q) / Total flow (Q)	Nominal ID / Actual ID	Fittings—quantity and length	L ft (m) / F ft (m) / T ft (m)	C Factor / P_f per foot (m) (psi) (bar)	total (P_t) / elev (P_e) / frict (P_f)	Notes
data 1	data 1	data 1	data 1	data	data	data	data	data 1	data
					data	data	data	data	
data 2	data 2		data	data	data	data		data	
data 1	data 1	data 1	data 1	data	data	data	data	data 1	data
					data	data	data	data	
data 2	data 2		data	data	data	data		data	
data 1	data 1	data 1	data 1	data	data	data	data	data 1	data
					data	data	data	data	
data 2	data 2		data	data	data	data		data	
data 1	data 1	data 1	data 1	data	data	data	data	data 1	data
					data	data	data	data	
data 2	data 2		data	data	data	data		data	
data 1	data 1	data 1	data 1	data	data	data	data	data 1	data
					data	data	data	data	
data 2	data 2		data	data	data	data		data	
data 1	data 1	data 1	data 1	data	data	data	data	data 1	data
					data	data	data	data	
data 2	data 2		data	data	data	data		data	
data 1	data 1	data 1	data 1	data	data	data	data	data 1	data
					data	data	data	data	
data 2	data 2		data	data	data	data		data	

© 2018 National Fire Protection Association NFPA 13

FIGURE 27.4.5.1.2(d) Detailed Worksheet.

EDUFIRE.IR

ASK THE AHJ

Can the authority having jurisdiction reject a set of plans if the computer-generated hydraulic calculation reports are not submitted in the format shown in 27.4.5?

Yes. If the jurisdiction enforces the 2007 or newer edition of NFPA 13, sprinkler system designers should have been submitting reports in the standardized format as of January 1, 2008. If the incorrect format is the submittal's only flaw, the authority having jurisdiction could potentially give the designer a warning to obtain software that will produce the correct format for future submittals.

27.4.5.2 Summary Sheet. The summary sheet as shown in Figure 27.4.5.1.2(a) shall contain the following information, where applicable:

(1) Project name and date
(2) Location (including street address)
(3) Owner or expected occupant of space being designed
(4) Name, address, and phone number of installing contractor
(5) Name and phone number of designer
(6) Authority having jurisdiction
(7) Standard or document system is being designed to, including the edition of the document
(8) Design area number and location
(9) Drawing or sheet number where design area is located
(10) Occupancy or commodity classification and information
(11) For storage applications (including miscellaneous), additional information including storage height, ceiling height, storage configuration, aisle width, orientation of upright or pendent, sprinkler K-factor and sprinkler temperature, and the table and or curve utilized in the design
(12) System type, including the system volume with type of protection system indicated in the notes
(13) Sprinkler type, including coverage and response type
(14) Slope of roof or ceiling within the design area
(15) System design requirements, as follows:
    (a) Design area of application, ft^2 (m^2)
    (b) Minimum rate of water application (density), gpm/ft^2 (mm/min)
    (c) Area per sprinkler, ft^2 (m^2)
    (d) Number of sprinklers calculated
(16) Total water requirements as calculated, including allowance for inside hose, outside hydrants, water curtain, and exposure sprinklers, and allowance for in-rack sprinklers, gpm (L/min)
(17) Ceiling height if used for quick response sprinkler reduction
(18) Elevation of highest calculated sprinkler
(19) Water supply information, including the following:
    (a) Date and time of test
    (b) Location of the test and flow hydrant(s)
    (c) Source of the water for the flow test
    (d) Elevation of the test hydrant relative to the finished floor
    (e) Size of fire pump, gpm @ psi
    (f) Size of on-site water tank
(20) Notes that include peaking information for calculations performed by a computer program, type of preaction system, limitations (dimension, flow, and pressure) on extended-coverage or other listed special sprinklers, system type, including the system volume

EDUFIRE.IR

27.4.5.3 Graph Sheet. A graphic representation of the complete hydraulic calculation shall be plotted on semiexponential graph paper ($Q^{1.85}$) as shown in Figure 27.4.5.1.2(b) and shall include the following:

(1) Water supply curve
(2) Sprinkler system demand
(3) Hose demand (where applicable)
(4) In-rack sprinkler demand (where applicable)
(5) Additional pressures supplied by a fire pump or other source (when applicable)

27.4.5.4 Supply Analysis. Information summarized from the graph sheet as shown in Figure 27.4.5.1.2(c) shall include the following:

(1) Node tag at the source
(2) Static pressure [psi (bar)] available at the source
(3) Residual pressure [psi (bar)] available at the source
(4) Total flow [gpm (L/min)] available at the source
(5) Available pressure [psi (bar)] at the source when the total calculated demand is flowing
(6) Total calculated demand [gpm (L/min)] at the source
(7) Required pressure [psi (bar)] when flowing total calculated demand

27.4.5.5 Node Analysis. Organized information as shown in Figure 27.4.5.1.2(c) regarding the node tags given to each hydraulic reference point on the system as indicated on the shop drawings shall include the following information:

(1) Node tag for each specific point on the system used in the hydraulic calculations
(2) Elevation in ft (m) of each node tag
(3) K-factor of flowing nodes (such as sprinklers)
(4) Hose allowance in gpm (L/min) requirements for the node tag
(5) Pressure in psi (bar) at the node
(6) Discharge in gpm (L/min) calculated at the node
(7) Notes that indicate any special requirements for the node

27.4.5.6 Detailed Worksheets. Detailed worksheets as shown in Figure 27.4.5.1.2(d) or computer printout sheets shall contain the following information:

(1) Sheet number
(2) Hydraulic reference points used in each step
(3) Elevation in ft (m) at each hydraulic reference point
(4) Sprinkler description and discharge constant (K) for the flowing reference point
(5) Flow in gpm (L/min) for the flowing reference point (when applicable)
(6) Total flow in gpm (L/min) through each step
(7) Nominal pipe size in in. (mm)
(8) Actual internal diameter of pipe in in. (mm)
(9) Quantity and length in ft (m) of each type of fitting and device
(10) Pipe lengths in ft (m), center-to-center of fittings
(11) Equivalent pipe lengths in ft (m) of fittings and devices for the step
(12) Total equivalent length in ft (m) of pipes and fitting for the step
(13) C-factor used in each step
(14) Friction loss in psi/ft (bar/m) of pipe
(15) Sum of the pressures from the previous step (starting pressure at beginning)
(16) Elevation head in psi (bar) between reference points
(17) Total friction loss in psi (bar) between reference points
(18) Required pressure in psi (bar) at each reference point

EDUFIRE.IR

(19) Notes and other information shall include the following:

(a) Velocity pressure and normal pressure if included in calculations
(b) In-rack sprinkler demand balanced to ceiling demand
(c) Notes to indicate starting points or reference to other sheets or to clarify data shown
(d) Diagram to accompany gridded system calculations to indicate flow quantities and directions for lines with sprinklers operating in the remote area
(e) Combined K-factor calculations for sprinklers on drops, armovers, or sprigs where calculations do not begin at the sprinkler
(f) The pressure [psi/(bar)] loss assigned the backflow device when included on a system
(g) Friction factor and Reynolds number when the Darcy–Weisbach equation is used

CLOSER LOOK [27.4.5.6]

Elevation Pressure

The specific weight of water produces the pressure associated with the elevation of water above a datum. For example, for a 1 ft × 1 ft × 1 ft (300 mm x 300 mm x 300 mm) cube filled with water, the resultant pressure at the base of the cube would be the force exerted by the weight of the cube over the area of the base of the cube. The weight of the cube is 62.4 lb (28,304 g) and the area of the base of the cube is 1 ft^2 (90,000 mm^2), which would result in a pressure of 62.4 lb/ft^2 or psi (2.98 bar). If this same cube were divided into columns of water with a base of 1 in.^{2} (645 mm^2) and standing 1 ft (300 mm) tall, the cube would contain 144 such columns.

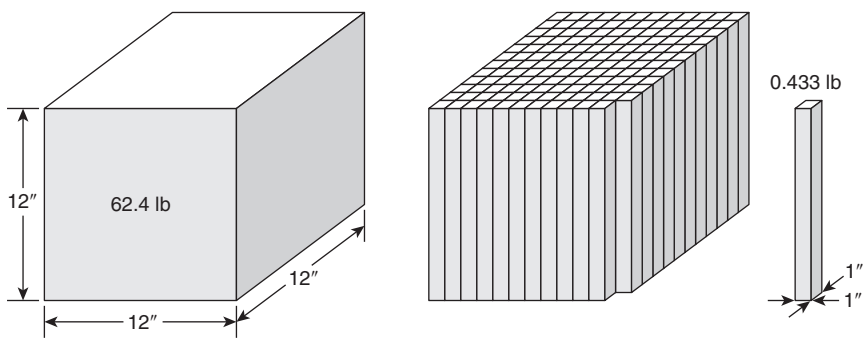

Elevation Pressure

27.5 Pipe Schedules.

Pipe schedules shall not be used, except in existing systems and in new systems or extensions to existing systems described in Chapter 19. Water supplies shall conform to 19.3.2.

The pipe schedule design approach was the first design method used for automatic sprinkler systems. With the invention of the calculator and its growing use in the 1970s, the hydraulic design method was introduced as a more accurate way to design sprinkler systems. This approach was especially appealing because it provided a way to account for the variable nature of water supply systems.

Unknown to many is the fact that the current density/area criteria used in the occupancy hazard design approach are based on the typical hydraulic performance of pipe schedule systems based on a relatively moderate water supply. As noted in 19.3.2, the use of pipe schedule design approaches is restricted to rather small systems, unless relatively high residual pressures are available.

EDUFIRE.IR

27.5.1* General.

A.27.5.1 The demonstrated effectiveness of pipe schedule systems is limited to their use with ½ in. (15 mm) orifice sprinklers. The use of other size orifices can require hydraulic calculations to prove their ability to deliver the required amount of water within the available water supply.

27.5.1.1 The pipe schedule sizing provisions shall not apply to hydraulically calculated systems.

27.5.1.2 Sprinkler systems having sprinklers with K-factors other than 5.6 nominal, listed piping material other than that covered in Table 7.3.1.1, extra hazard Group 1 and Group 2 systems, and exposure protection systems shall be hydraulically calculated.

The numbers of sprinklers shown in the pipe schedule tables are based on the assumption that the sprinklers in the pipe schedule system have a K-factor of K-5.6. Sprinklers with a larger K-factor will flow more water than a K-5.6 sprinkler at the same pressure, which would increase the friction loss in the piping and could adversely affect the ability of the sprinkler system to control the fire. Sprinklers with a smaller K-factor might not produce enough flow to control the fire.

27.5.1.3 The number of automatic sprinklers on a given pipe size on one floor shall not exceed the number given in 27.5.2, 27.5.3, or 27.5.4 for a given occupancy.

The numbers of sprinklers shown in the pipe schedule tables are maximum numbers for the minimum size pipes shown. The graduated type of system — that is, larger pipe serving increasingly smaller pipe — is not mandatory, provided that the minimum pipe sizes established in the pipe schedule tables are met. The number of sprinklers per branch line is limited (see 27.5.2.1, 27.5.3.1, and A.25.5.4) on pipe schedule systems, and, prior to 1966, the number of branch lines on a cross main was limited to 14 (see 27.5.1.3). These rules do not apply to hydraulically designed systems.

27.5.1.4* Size of Risers. Each system riser shall be sized to supply all sprinklers on the riser on any one floor as determined by the standard schedules of pipe sizes in 27.5.2, 27.5.3, or 27.5.4.

A.27.5.1.4 Where the construction or conditions introduce unusually long runs of pipe or many angles in risers or feed or cross mains, an increase in pipe size over that called for in the schedules can be required to compensate for increased friction losses.

27.5.1.5 Slatted Floors, Large Floor Openings, Mezzanines, and Large Platforms. Buildings having slatted floors or large unprotected floor openings without approved stops shall be treated as one area with reference to pipe sizes, and the feed mains or risers shall be of the size required for the total number of sprinklers.

Fire spreads readily through grated or slatted floors. Therefore, an area with such divisions must be treated as a single fire area when sizing pipe.

27.5.1.6 Stair Towers. Stair towers, or other construction with incomplete floors, if piped on independent risers, shall be treated as one area with reference to pipe sizes.

A fire in a stair or tower can open a large number of sprinklers in that area. An independent riser supplying such an area must be sized to supply all the sprinklers in the area.

27.5.2 Schedule for Light Hazard Occupancies.

27.5.2.1 Branch Lines.

27.5.2.1.1 Unless permitted by 27.5.2.1.2 or 27.5.2.1.3, branch lines shall not exceed eight sprinklers on either side of a cross main.

EDUFIRE.IR

27.5.2.1.2 Where more than eight sprinklers on a branch line are necessary, lines shall be permitted to be increased to nine sprinklers by making the two end lengths 1 in. (25 mm) and 1¼ in. (32 mm), respectively, and the sizes thereafter standard.

27.5.2.1.3 Ten sprinklers shall be permitted to be placed on a branch line, making the two end lengths 1 in. (25 mm) and 1¼ in. (32 mm), respectively, and feeding the tenth sprinkler by a 2½ in. (65 mm) pipe.

The amount of pressure lost to friction in long runs of small-diameter pipe is significant. Therefore, the number of sprinklers on a branch line is limited to eight sprinklers in light hazard occupancies. Paragraph 27.5.2.1.3 permits up to 10 sprinklers on branch lines in light hazard occupancies, provided that pipe sizing is increased to reduce the pressure drop along the run of pipe.

27.5.2.2 Pipe Sizes.

27.5.2.2.1 Pipe sizes shall be in accordance with Table 27.5.2.2.1.

A system riser in a light hazard occupancy is limited to the protection area of 52,000 ft^2 (4831 m^2). Piping is sized in accordance with Table 27.5.2.2.1, unless more than 100 sprinklers are in an area without subdividing partitions. Piping supplying such sprinklers must be sized in accordance with 27.5.2.4 to minimize the friction loss.

TABLE 27.5.2.2.1 *Light Hazard Pipe Schedules*

Steel		*Copper*		
		in.	*mm*	
1 in. (25 mm)	2 sprinklers	1	25 mm	2 sprinklers
1¼ in. (32 mm)	3 sprinklers	1¼	32 mm	3 sprinklers
1½ in. (40 mm)	5 sprinklers	1½	40 mm	5 sprinklers
2 in. (50 mm)	10 sprinklers	2	50 mm	12 sprinklers
2½ in. (65 mm)	30 sprinklers	2½	65 mm	40 sprinklers
3 in. (80 mm)	60 sprinklers	3	80 mm	65 sprinklers
3½ in. (90 mm)	100 sprinklers	3½	90 mm	115 sprinklers
4 in. (100 mm)	See Section 4.5	4	100 mm	See Section 4.5

27.5.2.2.2 Each area requiring more sprinklers than the number specified for 3½ in. (90 mm) pipe in Table 27.5.2.2.1 and without subdividing partitions (not necessarily fire walls) shall be supplied by mains or risers sized for ordinary hazard occupancies.

FAQ [27.5.2.3]

Is the ceiling, as referenced in 27.5.2.3, required to be a rated assembly (i.e., 1 hour-rated, 2 hour-rated, and so forth)?

The intent of the standard is that a ceiling separates the two areas, above and below the ceiling membrane, to limit the exposure of both sets of sprinklers to the same fire plume. Therefore, the requirements of 27.5.2.3 do not require a fire rated assembly.

27.5.2.3 Where sprinklers are installed above and below ceilings in accordance with Figure 27.5.2.3(a) through Figure 27.5.2.3(c), and such sprinklers are supplied from a common set of branch lines or separate branch lines from a common cross main, such branch lines shall not exceed eight sprinklers above and eight sprinklers below any ceiling on either side of the cross main.

27.5.2.4 Unless the requirements of 27.5.2.5 are met, pipe sizing up to and including 2½ in. (65 mm) shall be as shown in Table 27.5.2.4 utilizing the greatest number of sprinklers to be found on any two adjacent levels.

TABLE 27.5.2.4 *Number of Sprinklers Above and Below Ceiling*

Steel		*Copper*	
1 in. (25 mm)	2 sprinklers	1 in. (25 mm)	2 sprinklers
1¼ in. (32 mm)	4 sprinklers	1¼ in. (32 mm)	4 sprinklers
1½ in. (40 mm)	7 sprinklers	1½ in. (40 mm)	7 sprinklers
2 in. (50 mm)	15 sprinklers	2 in. (50 mm)	18 sprinklers
2½ in. (65 mm)	50 sprinklers	2½ in. (65 mm)	65 sprinklers

EDUFIRE.IR

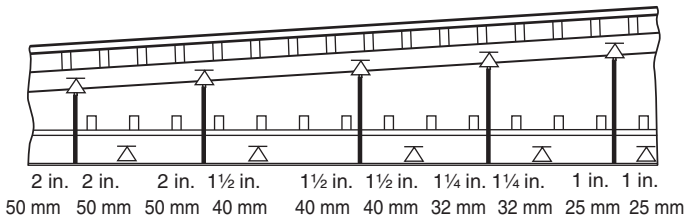

FIGURE 27.5.2.3(a) *Arrangement of Branch Lines Supplying Sprinklers Above and Below Ceiling.*

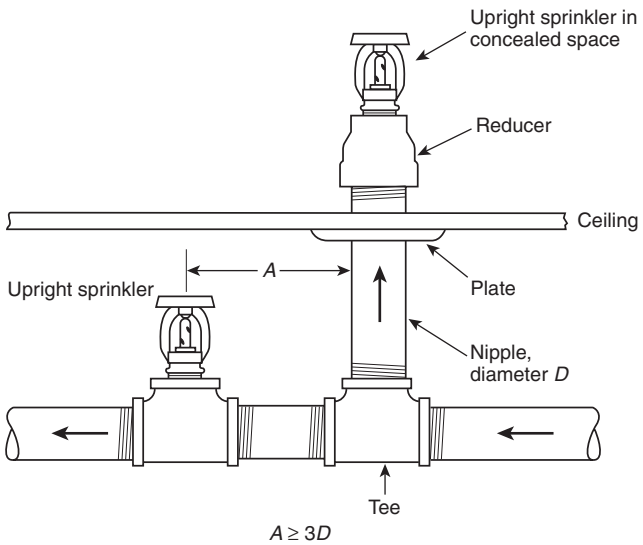

FIGURE 27.5.2.3(b) *Sprinkler on Riser Nipple from Branch Line in Lower Fire Area.*

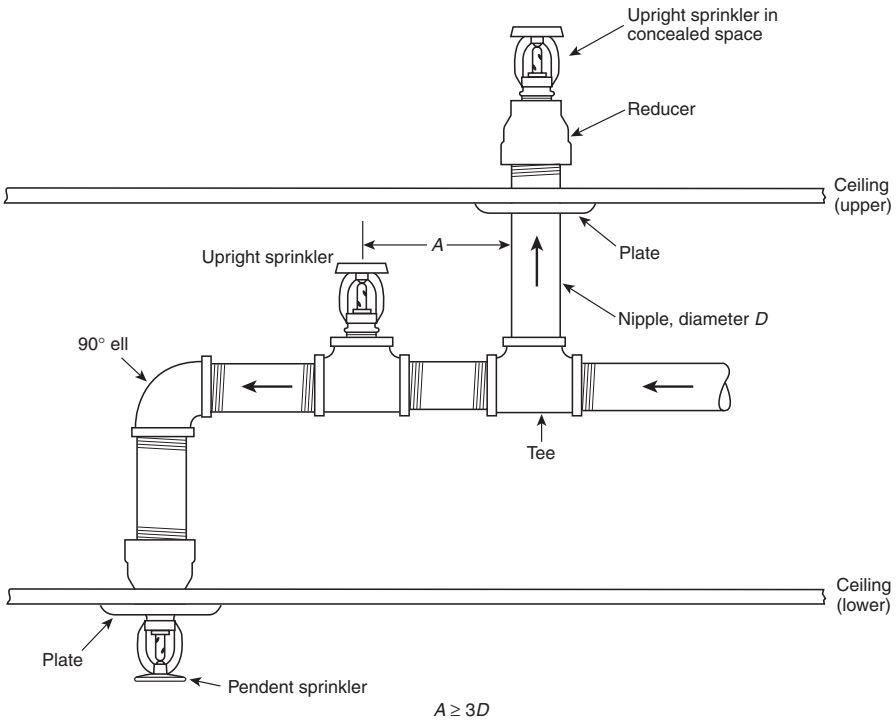

FIGURE 27.5.2.3(c) *Arrangement of Branch Lines Supplying Sprinklers Above, Between, and Below Ceilings.*

EDUFIRE.IR

27.5.2.5 Branch lines and cross mains supplying sprinklers installed entirely above or entirely below ceilings shall be sized in accordance with Table 27.5.2.2.1.

A fire either above or below a ceiling in a light hazard occupancy normally will be contained in that area by operating sprinklers (see 27.5.2.5). In light hazard pipe schedule systems, NFPA 13 permits more sprinklers on a branch line in the above or below configuration than are permitted on a branch line protecting a single area. NFPA 13 also permits more total sprinklers to be supplied by a given pipe size. To determine if sprinkler protection is needed above the ceiling, Section 9.2 should be consulted.

The requirement of 27.5.2.5 recognizes that piping dedicated to a given area — that is, above a ceiling or below a ceiling — must be sized to accommodate the sprinklers for that area only.

27.5.2.6* Where the total number of sprinklers above and below a ceiling exceeds the number specified in Table 27.5.2.4 for 2½ in. (65 mm) pipe, the pipe supplying such sprinklers shall be increased to 3 in. (75 mm) and sized thereafter according to the schedule shown in Table 27.5.2.2.1 for the number of sprinklers above or below a ceiling, whichever is larger.

A.27.5.2.6 For example, a 2½ in. (65 mm) steel pipe, which is permitted to supply 30 sprinklers, can supply a total of 50 sprinklers where not more than 30 sprinklers are above or below a ceiling.

The probability of a fire involving the areas both above and below a ceiling in a light hazard occupancy and opening in excess of 50 sprinklers is extremely remote. When piping is being sized for systems with more than 50 sprinklers, the pipe diameter is increased to 3 in. (75 mm) to reduce friction loss (see 27.5.2.6).

27.5.3 Schedule for Ordinary Hazard Occupancies.

27.5.3.1 Unless permitted by 27.5.3.2 or 27.5.3.3, branch lines shall not exceed eight sprinklers on either side of a cross main.

27.5.3.2 Where more than eight sprinklers on a branch line are necessary, lines shall be permitted to be increased to nine sprinklers by making the two end lengths 1 in. (25 mm) and 1¼ in. (32 mm), respectively, and the sizes thereafter standard.

27.5.3.3 Ten sprinklers shall be permitted to be placed on a branch line, making the two end lengths 1 in. (25 mm) and 1¼ in. (32 mm), respectively, and feeding the tenth sprinkler by a 2½ in. (65 mm) pipe.

27.5.3.4 Pipe sizes shall be in accordance with Table 27.5.3.4.

TABLE 27.5.3.4 *Ordinary Hazard Pipe Schedule*

Steel		*Copper*	
1 in. (25 mm)	2 sprinklers	1 in. (25 mm)	2 sprinklers
1¼ in. (32 mm)	3 sprinklers	1¼ in. (32 mm)	3 sprinklers
1½ in. (40 mm)	5 sprinklers	1½ in. (40 mm)	5 sprinklers
2 in. (50 mm)	10 sprinklers	2 in. (50 mm)	12 sprinklers
2½ in. (65 mm)	20 sprinklers	2½ in. (65 mm)	25 sprinklers
3 in. (80 mm)	40 sprinklers	3 in. (80 mm)	45 sprinklers
3½ in. (90 mm)	65 sprinklers	3½ in. (90 mm)	75 sprinklers
4 in. (100 mm)	100 sprinklers	4 in. (100 mm)	115 sprinklers
5 in. (125 mm)	160 sprinklers	5 in. (125 mm)	180 sprinklers
6 in. (150 mm)	275 sprinklers	6 in. (150 mm)	300 sprinklers
8 in. (200 mm)	See Section 4.5	8 in. (200 mm)	See Section 4.5

The pipe sizes specified in Table 27.5.3.4 take into consideration normal water supplies and friction loss. The pipe sizes tend to be somewhat smaller for branch lines and somewhat larger for cross mains, feed mains, and system risers compared with hydraulically designed systems.

EDUFIRE.IR

27.5.3.5 Where the distance between sprinklers on the branch line exceeds 12 ft (3.7 m) or the distance between the branch lines exceeds 12 ft (3.7 m), the number of sprinklers for a given pipe size shall be in accordance with Table 27.5.3.5.

The requirement of 27.5.3.5 recognizes the increased friction loss when either the distance between sprinklers on branch lines or the distance between branch lines exceeds 12 ft (3.7 m). The requirement also recognizes that the sprinkler's area of coverage must reach or overlap any adjacent sprinkler's area of coverage, so that uniform water discharge and density are achieved. Increasing the pipe sizing as required reduces pressure losses due to friction and results in a greater amount of pressure at the sprinkler. The higher pressure increases sprinkler discharge and improves water distribution.

TABLE 27.5.3.5 *Number of Sprinklers — Greater Than 12 ft (3.7 m) Separations*

Steel		***Copper***	
2½ in. (65 mm)	15 sprinklers	2½ in. (65 mm)	20 sprinklers
3 in. (80 mm)	30 sprinklers	3 in. (80 mm)	35 sprinklers
3½ in. (90 mm)	60 sprinklers	3½ in. (90 mm)	65 sprinklers

Note: For other pipe and tube sizes, see Table 27.5.3.4.

27.5.3.6 Where sprinklers are installed above and below ceilings and such sprinklers are supplied from a common set of branch lines or separate branch lines supplied by a common cross main, such branch lines shall not exceed eight sprinklers above and eight sprinklers below any ceiling on either side of the cross main.

27.5.3.7 Pipe sizing up to and including 3 in. (76 mm) shall be as shown in Table 27.5.3.7 in accordance with Figure 27.5.2.3(a), Figure 27.5.2.3(b), and Figure 27.5.2.3(c) utilizing the greatest number of sprinklers to be found on any two adjacent levels.

TABLE 27.5.3.7 *Number of Sprinklers Above and Below a Ceiling*

Steel		***Copper***	
1 in. (25 mm)	2 sprinklers	1 in. (25 mm)	2 sprinklers
1¼ in. (32 mm)	4 sprinklers	1¼ in. (32 mm)	4 sprinklers
1½ in. (40 mm)	7 sprinklers	1½ in. (40 mm)	7 sprinklers
2 in. (50 mm)	15 sprinklers	2 in. (50 mm)	18 sprinklers
2½ in. (65 mm)	30 sprinklers	2½ in. (65 mm)	40 sprinklers
3 in. (80 mm)	60 sprinklers	3 in. (80 mm)	65 sprinklers

27.5.3.8 Branch lines and cross mains supplying sprinklers installed entirely above or entirely below ceilings shall be sized in accordance with Table 27.5.3.4 or Table 27.5.3.5.

A fire located either above or below a ceiling in an ordinary hazard occupancy normally will be contained in that area by operating sprinklers. In ordinary hazard pipe schedule systems, NFPA 13 permits more sprinklers on a branch line in the above or below configuration than are permitted on a branch line protecting a single area. NFPA 13 also permits more total sprinklers to be supplied by a given pipe size. To determine if sprinkler protection is needed above the ceiling, Section 9.2 should be consulted.

27.5.3.9* Where the total number of sprinklers above and below a ceiling exceeds the number specified in Table 27.5.3.7 for 3 in. (80 mm) pipe, the pipe supplying such sprinklers shall be increased to 3½ in. (90 mm) or larger and sized thereafter according to the schedule shown in Table 27.5.2.2.1 or Table 27.5.3.4 for the number of sprinklers above or below a ceiling, whichever is larger.

A.27.5.3.9 For example, a 3 in. (80 mm) steel pipe, which is permitted to supply 40 sprinklers in an ordinary hazard area, can supply a total of 60 sprinklers where not more than 40 sprinklers protect the occupied space below the ceiling.

EDUFIRE.IR

27.5.3.10 Where the distance between the sprinklers protecting the occupied area exceeds 12 ft (3.7 m) or the distance between the branch lines exceeds 12 ft (3.7 m), the branch lines shall be sized in accordance with either Table 27.5.3.5, taking into consideration the sprinklers protecting the occupied area only, or Table 27.5.3.7, whichever requires the greater size of pipe.

The probability of a fire involving the areas both above and below a ceiling in an ordinary hazard occupancy and opening in excess of 60 sprinklers is extremely remote. When piping or tubing is being sized for systems with more than 60 sprinklers with steel pipe and more than 65 sprinklers with copper tubing, the pipe or tubing diameter is increased to reduce friction loss.

27.5.4* Extra Hazard Occupancies. Extra hazard occupancies shall be hydraulically calculated.

A.27.5.4 The piping schedule shown in Table A.27.5.4 is reprinted only as a guide for existing systems. New systems for extra hazard occupancies should be hydraulically calculated as required in 27.5.4.

Because many existing pipe schedule systems are currently in place, the selection table for extra hazard occupancies has been retained and appears as Table A.27.5.4.

TABLE A.27.5.4 *Extra Hazard Pipe Schedule*

Steel		*Copper*	
Size [in. (mm)]	*Number of Sprinklers*	*Size [in. (mm)]*	*Number of Sprinklers*
1 (25)	1	1 (25)	1
1¼ (32)	2	1¼ (32)	2
1½ (40)	5	1½ (40)	5
2 (50)	8	2 (50)	8
2½ (65)	15	2½ (65)	20
3 (80)	27	3 (80)	30
3½ (90)	40	3½ (90)	45
4 (100)	55	4 (100)	65
5 (125)	90	5 (125)	100
6 (150)	150	6 (150)	170

For SI units, 1 in. = 25 mm.

References Cited in Commentary

National Fire Protection Association, 1 Batterymarch Park, Quincy, MA 02169-7471.

NFPA 11, *Standard for Low-, Medium-, and High-Expansion Foam,* 2019 edition.

NFPA 13D, *Standard for the Installation of Sprinkler Systems in One- and Two-Family Dwellings and Manufactured Homes,* 2019 edition.

NFPA 14, *Standard for the Installation of Standpipe and Hose Systems,* 2016 edition.

NFPA 15, *Standard for Water Spray Fixed Systems for Fire Protection,* 2017 edition.

NFPA 16, *Standard for the Installation of Foam-Water Sprinkler and Foam-Water Spray Systems,* 2015 edition.

NFPA 25, *Standard for the Inspection, Testing, and Maintenance of Water-Based Fire Protection Systems,* 2017 edition.

NFPA 30, *Flammable and Combustible Liquids Code,* 2018 edition.

NFPA 80A, *Recommended Practice for Protection of Buildings from Exterior Fire Exposures,* 2017 edition.

NFPA 170, *Standard for Fire Safety and Emergency Symbols,* 2018 edition.

American Fire Sprinkler Association, 9696 Skillman Street, Suite 300, Dallas, TX 75243-8264

"Water Velocity: Its Impact on the Accuracy of Hydraulic Calculations," 1996 (available at www.sprinklernet.org).

FM Global, 270 Central Avenue, P.O. Box 7500, Johnston, RI 02919-4923.

FM Data Sheet 2-0, *Installation Guidelines for Automatic Sprinklers*, January 2018, available at www.fmglobaldatasheets.com.

EDUFIRE.IR

Project Workflow Documents

It is important to keep in mind that NFPA 13 is a design and installation standard, not a "how to" document on completing a sprinkler design project. The purpose of the standard is to answer the "what" questions surrounding the design/installation of a sprinkler system:

- What is maximum sprinkler spacing?
- What equipment is required?
- What acceptance tests must be conducted?
- What is the required system demand?

It is not the intent of NFPA 13 to dictate how those tasks are to be accomplished. Similarly, the standard does not provide detail on when certain tasks, which may be integral to project completion, should be undertaken. The standard does not provide a sequence of events that must take place to most efficiently and most effectively complete a project. For example, the standard does not discuss the transition from preliminary plans to working plans, when to place orders with the fabrication shop, or when in the process to discuss the design with the authority having jurisdiction.

This allows design and installation professionals to use their own methods and processes to execute a design and installation project, provided the end result meets the requirements of NFPA 13. While a specified design process is not outlined in the standard, many design firms and installing contractors look for guidance on this subject.

The following exhibits provide examples of a workflow and task list for the completion of a sprinkler system design and installation project. The documents look at the workflow of a sprinkler project from the perspective of a design and installation firm but represent only one approach for successfully completing a project within the guidelines of NFPA 13. While not standardized in NFPA 13, this information provides a framework to ensure that the key tasks for the safe and compliant installation of the system are performed in a cost-effective and efficient manner.

(Continues)

EDUFIRE.IR

Project Workflow Documents *Continued*

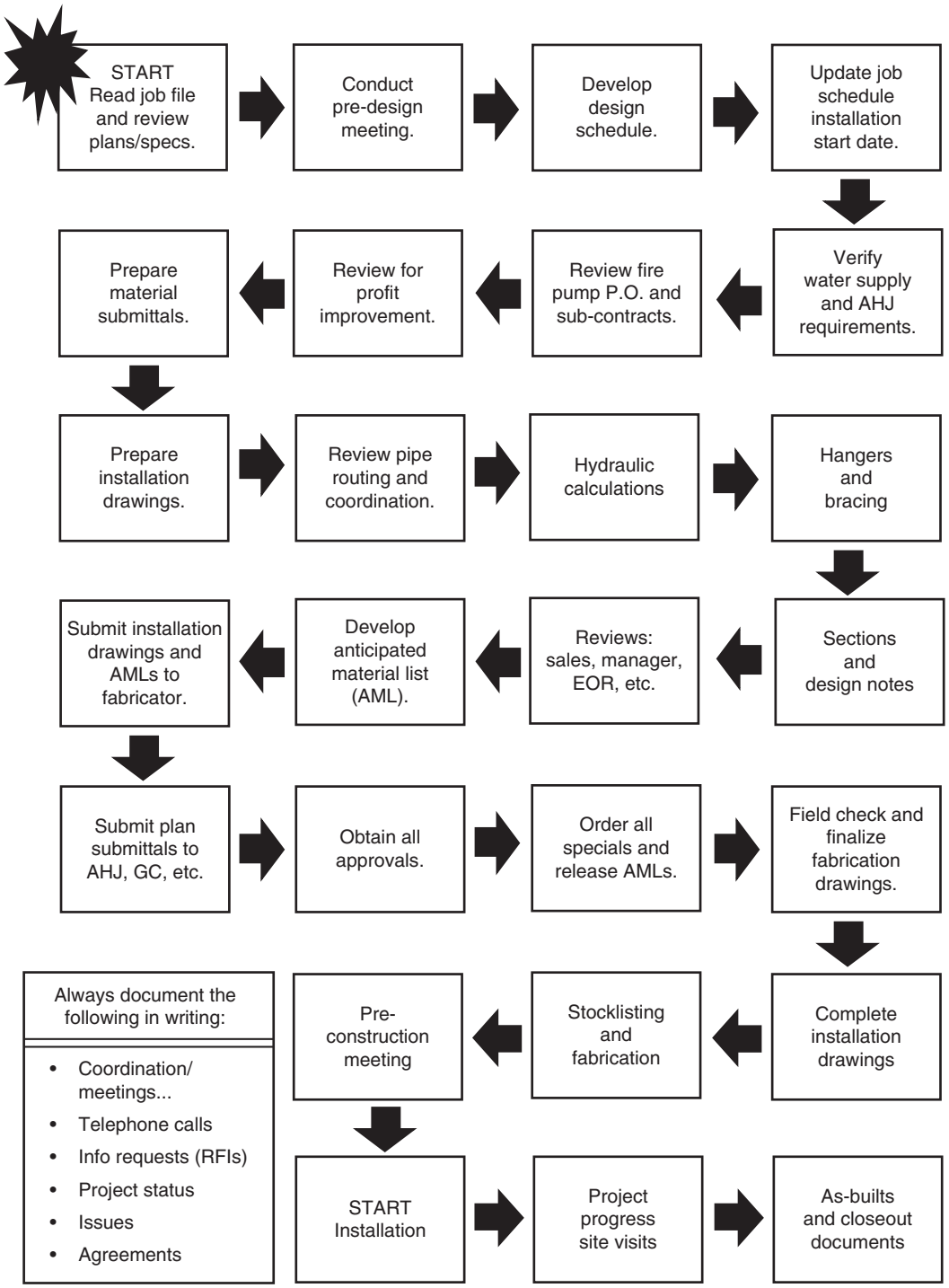

Project Workflow Chart. (Courtesy of Wiginton Fire Systems)

(Continues)

EDUFIRE.IR

Project Workflow Documents *Continued*

Workflow Process	Project Development	Assignment and Pre-design Meeting	Actual Design	Internal Reviews	Design Submittals and Approvals	Materials and Fabrication Listing	Pre-construction Meeting and Installation
Major Task and Activities	Understand the project scope of work. Obtain owner's information certificate. Understand the intended use of the building (occupancy). Design durations Sprinkler types System information Material information Equipment Pricing Issue RFIs if specs are unclear or questions arise. Use company information sheets to develop the project and important information required to complete it successfully. Verify business and contractor licenses are current.	Assign to designer with appropriate skills. Review job file, specifications, drawings, owner's information certificate and develop a list of questions. Place emphasis on hazard, occupancy, water supply, and CAD files. **Pre-Design Meeting:** Designer Salesman Manager Discuss the scope of work, preliminary plan and calculations, estimate sheet, water supply, and project schedule. Develop goals and milestones. Assign responsibilities for missing information.	Clean and convert CAD files. Start design in accordance with company methods, procedures, and appropriate standards. Layout underground. Layout sprinklers and route piping. Perform hydraulic calculations. Coordinate piping with building features and other trades. Complete hangers, bracing, and design notes. Monitor project schedule. Issue RFIs if specs are unclear or questions arise. Submit pump and tank submittal as soon as sizes are verified.	Salesman reviews drawings as soon as layout and pipe sizing are complete. Design manager reviews design progress at the following stages: submittal, fabrication, and installation. Designers use checklist in the project information sheets. Perform final review before submittals. Fill out anticipated material list (AML).	Submit plans, calculations, and submittal data to the authority having jurisdiction and owner's representative. Engineer of record reviews and approves (if required). Track all submittals. Secure business and contractor's license (if needed). Gain authority having jurisdiction approval and permit. Submit and obtain approval from owner's insurance company.	Conduct and complete field checks by design with assistance from the field superintendent. Make final revisions to drawing based on the field check and coordination. Use fabrication/ listing checklist to ensure that system components ordered meet system design. Use electronic methods of submittal when possible.	**Pre-construction Meeting:** Explain design and hand off to field superintendent (with project foreman present). Discuss schedule, material staging, height of building, working conditions, starting point, and sequence. Foreman package: Sets of field prints (as necessary include as-built set) Map Hydraulic placards Test papers Copy of lists Copy of permit Copy of project specs relative to field work Copy of approved plans Manufacturer's installation instructions for special equipment Visit site.
Minor Activities	Use proper NFPA standards and other technical data. Check local codes.	Document meetings and assignments.	Assure required personnel attend. Keep focused on project requirements.	Compare drawings to estimate.	Verify construction progress.	Review anticipated material list.	Check that documents are correct and complete.
Tools Forms	Estimate program	Pre-design checklist RFI forms RFI log	CAD and hydraulic software NFPA standards FM standards Building and fire codes	Checklists AML form	Submittal log	Digital laser Tape Measure Level Stocklisting software Checklists	Foreman package checklist

Design Workflow. (Courtesy of Wiginton Fire Systems)

(Continues)

EDUFIRE.IR

Project Workflow Documents *Continued*

Project Workflow

1.0 Project Development Process

1.1 Determine Occupancy and Establish Scope of Work:
If the occupancy is not specified, interview the owner(s) to determine the occupancy or specific use of each space within the building. Establish scope of work for all areas. The owner(s) should provide a signed copy of a completed owner's information certificate. See 4.2 and Figure A.27.1(b).

1.2 Develop Design Criteria:
If the design criteria is specified, verify the criteria is adequate for the occupancy. If the design criteria is not specified, determine the design criteria based on occupancy and construction. Use Chapter 19 for nonstorage occupancies and Chapters 4, 20, 21, 22, 23, 24, and 25 for storage occupancies. Verify that the design criteria meet local and state codes, along with any NFPA requirements.

1.3 Establish Water Supply:
If the water supply for the sprinkler system has not been established, evaluate the best option such as city connection, pump and tank, along with other options. The water supply must be capable of supplying the water demand of the sprinkler system and hose, for the required duration, in accordance with Chapter 5. Perform a flow test in accordance with NFPA 291.

1.4 Coordinate Any Special Equipment:
If a fire pump, tank and/or other special equipment is required, coordinate the specifications, electrical, and structural requirements with the appropriate project engineer.

1.5 Layout Underground Water Supply:
The underground fire line supplying the sprinkler system must be drawn in accordance with 27.1.3 and should include the latest flow test. It is important that the fire officials see the locations of hydrants, pumps, and FDC.

1.6 Prepare Preliminary Overhead Layout:
A preliminary sprinkler head layout must be prepared based on spacing in accordance with Chapters 9 through 15. The sprinkler layout should take into consideration construction and obstruction, including ceiling fixtures. The pipe must be routed in the most hydraulically efficient way along with proper pitching for draining the system.

1.7 Prepare Preliminary Hydraulic Calculations:
A set of hydraulic calculations must be prepared based on the preliminary layout, design criteria, and current water supply information in accordance with Chapter 27. Use a flow test that was taken within 12 months of the proposed submittal date in accordance with 4.6.1.1.

1.8 Develop a List of Approved and/or Listed Material:
A detailed list of materials to be used for the project should be developed with attention to approvals, listings, and manufacturer's data sheets. All material must meet the requirements of Chapter 7.

1.9 Prepare Estimate/Pricing:
A pickoff list of the materials showing quantities and pricing should be prepared for the purpose of developing the overall project price. Fabricators and suppliers should be consulted when determining availability and pricing. A list of labor tasks along with related pricing should be prepared and included in the project price.

1.10 Prepare Sales Proposal/Contract:
A sales proposal/quotation that includes scope of work, terms, conditions, and price, including any alternatives, should be developed prior to the bid date. Review the buyer's contract for acceptable terms and conditions, including liability, indemnification, and insurance clauses.

1.11 Prepare Sales Package:
A sales package should be developed consisting of a proposal, specifications, CAD drawings, data sheets, pickoff sheets, estimate sheet, owner's certificate, preliminary calculations, preliminary layout, and project schedule for the purpose of transferring information to the designer.

2.0 Design Process

2.1 Review Project File and Drawings:
A review of the sales package should be conducted prior to the start of any design. A list of questions should be developed based on the review. A verification that the design criteria meet local and state codes, along with any NFPA and owner requirements, should be conducted before proceeding with the design of the piping layout.

2.2 Conduct Pre-design Meeting:
A pre-design or hand-off meeting between sales and design should be conducted prior to the start of design. The purpose of the meeting is to ensure that all parties have a clear understanding of the overall project, including the scope of work, approval process, schedule, and any special owner requirements.

2.3 Review Schedule and Establish Milestones:
Based on a complete review of the project schedule, establish milestones such as dates for submitting drawings, approvals, permitting, field checking, ordering material, fabrication, material delivery, installation, testing, and completing as-built drawings. Factor into the schedule any special order items that may have long lead-times.

Project Workflow. (Courtesy of Wiginton Fire Systems)

(Continues)

EDUFIRE.IR

Project Workflow Documents *Continued*

2.4 Clean Up CAD Files:
The project CAD files from the architect need to be cleaned up by deleting or turning off unnecessary layers and information that do not relate to the fire protection drawings. At a minimum, the drawings must include what is listed in 27.1.3.

2.5 Layout Underground, Pump and/or Tank:
Use the civil drawings that show the city main to layout the underground supply to the fire protection system(s). If the water supply consists of a fire pump and/or tank, depict it on the civil drawing, if possible. This will keep all the water supply and related equipment on the same drawing. The FDC and hydrants should be located on this drawing as well to assist the authority having jurisdiction in reviewing and planning.

2.6 Space and Layout Fire Sprinklers:
All fire sprinklers must be spaced in accordance with Chapters 9 through 15 based on the type of construction, occupancy, fire sprinkler type, and obstruction concerns.

2.7 Route Piping:
All sprinkler pipe must be routed in the hydraulically most efficient way, taking into consideration the ease of installation, along with obstructions, clearance heights, other building trades, and features.

2.8 Coordinate Piping With Other Trades:
Always consider other trades when routing pipe. Contact other trades when routing pipe in a congested area to coordinate the exact location and height to avoid conflicts during installation. Follow RFI process to resolve any unclear issues. B.I.M. (Building Information Modeling) may be required for virtual coordination on some projects.

2.9 Perform Hydraulic Calculations:
Always select the hydraulically most remote area in accordance with Chapter 27. It may be necessary to calculate several areas to verify the hydraulically most remote area. If the property has a mixed occupancy, each occupancy may need to be calculated depending on location and hazard.

2.10 Design Hangers and Bracing:
All hangers need to be spaced and designed in accordance with Chapters 17 and 18 based on the type of construction and pipe size. If the system must be protected against damage from earthquakes, follow the requirements of Chapter 18.

2.11 Note Details:
Clearly note the scope of work, the design criteria for the system, and any special conditions. Any special conditions, hose stations, fire pumps, riser diagrams, and hangers should be detailed to give the installer a better understanding of the equipment and arrangement.

2.12 Review Plans Prior to Submittal:
Review plans and calculations for completeness using Chapter 27. Review plans and calculations to make sure they are in accordance with the contract documents, local codes and applicable NFPA documents.

2.13 Submit Plans to Authority Having Jurisdiction in Accordance With Local Requirements:
Submit plans, calculations and product data sheets to the local authority having jurisdiction for a permit in accordance with local requirements. Always consider the review turnaround time when scheduling the project.

2.14 Track Approvals:
Always track the approval process and make follow-up calls to avoid delays to the project schedule.

2.15 Field Check Project:
All projects should be field checked prior to stocklisting them, to verify the structure is constructed in strict accordance with the building plans.

2.16 Prepare Drawing for Stocklisting and Fabrication:
Based on the results of the field check, adjust the drawing accordingly. Verify all mains and line notations are shown along with any special equipment.

3.0 Fabrication Process

3.1 Stocklist the Material:
Stocklist the material in accordance with the material specifications and the approved material data sheets for the project. Verify all material components are in accordance with Chapter 7.

3.2 Purchase the Material:
Based on competitive pricing, purchase the material based on the specifications and the approved material data sheets for the project.

3.3 Fabricate the Material:
All fabrication must be in accordance with Chapter 7, with special attention to the requirements of welded fabrication in 7.5.2

4.0 Installation Process

4.1 Conduct Pre-construction Meeting:
A pre-construction meeting should be held with the installation foreman, superintendent, and the designer prior to the start of the installation. The purpose of this meeting is to go over the drawings in detail, the contract documents, job schedule and the results of the coordination with other trades.

Project Workflow. (Courtesy of Wiginton Fire Systems)

(Continues)

EDUFIRE.IR

Project Workflow Documents *Continued*

4.2 Establish Materials Staging Area:
A staging area for all materials should be established with the contractor's superintendent prior to the delivery of materials. Organize and field-verify material counts. The staging area should be close to the installation area yet out of the way of other trades.

4.3 Review Proper Tools and Equipment:
It is important that all installers are equipped with the proper tools and equipment to aid in the installation of the project in the most efficient way. They must be properly trained on how to use the equipment in a safe manner.

4.4 Review Safety Equipment:
Review and inspect all safety equipment, along with training records, to ensure a safe installation process.

4.5 Start at the Riser:
It is always a good idea to start the installation from the riser to avoid having to adjust the main piping later.

4.6 Rough-in Work:
Install the system in accordance with the installations drawings, verifying the fire sprinklers are in compliance with the spacing and obstruction rules in Chapters 9 through 15. Once the system is completely roughed-in, prepare a punchlist of any remaining to-do items.

4.7 Perform Testing Prior to Approvals:
Always perform the proper test on the system in accordance with Chapter 28 prior to the authority having jurisdiction's required acceptance test. If the results are acceptable, then contact the authority having jurisdiction to set up the final acceptance test.

4.8 Finish Work:
Once the ceilings and walls are finished, install the required fire sprinkler escutcheons, wall plates, head cabinets, and hose equipment. Installing them last will keep them free from dirt and debris. Complete any punchlist items.

4.9 Prepare As-built Drawings:
Prepare a set of as-built drawings based on feedback from the installation crew on any adjustments they may have made to the original installation drawings.

4.10 Submit Closeout Documents:
Submit closeout documents in accordance with the contract documents that include as-built drawings, material data sheets, warranties, and a copy of the applicable "sections of" NFPA 25.

4.11 Present Owner Training:
Present a training session on all the new fire protection equipment to the owner's representative. Document who received the training and when it was held.

Project Workflow. (Courtesy of Wiginton Fire Systems)

EDUFIRE.IR

Plan Review Checklist

The sample checklist provided on the pages that follow is a systematic approach to plan review. Even though a 100,000 ft^2 (9290.3 m^2) high-bay warehouse will be a more complicated review than a 10,000 ft^2 (929 m^2) two-story office building, the approaches to both are fairly consistent. The goal of this lesson is to assist in locating the necessary information within NFPA 13.

The topic of plan review typically generates several questions:

- Who is responsible for plan review?
- What am I looking for?
- Is there a checklist?
- How are comments listed?
- When should a set of plans be rejected?

The realistic answer to each of those questions is, "It depends." The answers will vary depending on jurisdiction. Even though the questions seem simple, a multitude of variables must be considered. The bottom line is that working plans are required to be submitted to the authority having jurisdiction prior to any equipment installation (see 27.1.1).

Requirements for plans submittal in one jurisdiction will differ from the requirements in another jurisdiction. Approaches to plan review will also vary. There is no one specific or correct method for plan review. It depends on the comfort level of the reviewer.

The following simple steps provide a solid starting point to the plan review process:

1. Determine general project information.
2. Identify general plans information.
3. Determine water supply.
4. Identify sprinkler system.
5. Identify sprinkler system components.
6. Identify design.
7. Calculate hydraulics.
8. Provide system supervision.

(Continues)

EDUFIRE.IR

Plan Review Checklist *Continued*

Automatic Sprinkler System
Plan Review Checklist
NFPA 13

STEP 1: GENERAL PROJECT INFORMATION

Permit no.: _____ Project/occupancy name: _____
Project address: _____
Owner's name: _____

Sprinkler contractor name: _____
Contractor address: _____
Point of contact (name): _____
Contractor phone: _____ e-mail: _____

Date of review by AHJ: _____ Date comments sent to contractor: _____
Name of AHJ plans examiner: _____

- Code and edition governed by project: _____
- Edition of NFPA 13 used for design: _____
- Type of system being installed: ❑ Wet ❑ Dry ❑ Preaction ❑ Deluge
- Is this a new system or a change to an existing system? ❑ New system ❑ Change to existing system
- Owner certificate included: ❑ Yes ❑ No

- Building description:
  Square footage of the project: _____
  Use of building: _____ Building height: _____
  Total area of building: _____ Area per floor: _____
  Total number for floors above grade: _____ below grade: _____

- What is the construction type?
  ❑ Fire resistive ❑ Noncombustible ❑ Ordinary
  ❑ Heavy timber ❑ Wood frame ❑ Mixed

- What is the fire sprinkler occupancy hazard classification? [4.3]
  ❑ Light hazard ❑ Extra hazard Group I ❑ Storage
  ❑ Ordinary hazard Group I ❑ Extra hazard Group II
  ❑ Ordinary hazard Group II ❑ Special occupancy

- Are there special occupancy requirements for the system? ❑ Yes ❑ No
  (Flammable/combustible liquids, aircraft hangars, oxidizers, etc.)

- Is there storage over 12 ft (3.7 m)? ❑ Yes ❑ No

- If this is a storage occupancy, what is the commodity classification?
  ❑ Class I ❑ Class II ❑ Class III ❑ Class IV
  ❑ Group A ❑ Group B ❑ Group C

© 2018 National Fire Protection Association NFPA 13 Handbook (p. 1 of 5)

Automatic Sprinkler System Plan Review Checklist.

EDUFIRE.IR

Plan Review Checklist *Continued*

Plan Review Checklist (*continued*)

STEP 2: GENERAL PLANS INFORMATION

The following has been shown on plans correctly:

YES	NO	
❑	❑	Name of owner or occupant [27.1.3(1)]
❑	❑	Location, including street address [27.1.3(2)]
❑	❑	Point of compass [27.1.3(3)]
❑	❑	Full height cross section [27.1.3(4)]
❑	❑	Ceiling/roof heights and slopes not shown in the full height cross section [27.1.3(5)]
❑	❑	Location of partitions [27.1.3(6)]
❑	❑	Location of fire walls [27.1.3(7)]
❑	❑	Occupancy class of each area or room [27.1.3(8)]
❑	❑	Location and size of concealed spaces, closets, attics, and bathrooms [27.1.3(9)]
❑	❑	Small enclosures in which no sprinklers are to be installed [27.1.3(10)]
❑	❑	Scale the plans were drawn to [23.1.3(34)]

STEP 3: WATER SUPPLY

The following water supply information is clearly indicated on plans:

❑ Capacity is verified at _____ gpm (L/min) for a duration of _____ hours for a total capacity of _____ gal (L). [19.3.3.1.2]

Type of water supply:

❑ Public ❑ Stored water (tanks) ❑ Raw water source

YES	NO	
❑	❑	Location and elevation of static and residual hydrants in relationship to the riser location [4.6.1]
❑	❑	Date and time of flow test (must be within one year of design) [4.6.1]
❑	❑	Static, residual, and flow from test [4.6.1]
❑	❑	Name of person who conducted or source of water supply information [4.6.1]

Private Fire Service Mains

The following information is clearly indicated on plans:

❑ Size, length, and location of main [27.1.3(30)]
❑ Material listed for use [10.1.1 / 10.2.1]
❑ Point of connection to city main [27.1.3(30)]
❑ Size, type, and location of valves [27.1.3(30)]
❑ Size, type, and location of valve indicators [27.1.3(30)]
❑ Size, type, and location of regulators [27.1.3(30)]
❑ Size, type, and location of meters [27.1.3(30) / 5.1.7]
❑ Size, type, and location of valve pits [27.1.3(30) / 16.9.10]
❑ Depth of top of pipe laid below grade [27.1.3(30) / 6.4]
❑ Size and location of all thrust blocks [6.8.2]
❑ Size and location of hydrants (showing size and number of outlets and whether outlets to be equipped with independent gate valves) [27.1.3(45)]
❑ Whether hose houses and equipment are to be provided and by whom [27.1.3(45)]

Fire Pump

❑ Electric ❑ Diesel ❑ Steam ❑ N/A

Rated Capacity: _____

❑ The pump layout complies with NFPA 20.

© 2018 National Fire Protection Association NFPA 13 Handbook (p. 2 of 5)

Automatic Sprinkler System Plan Review Checklist. (Continued)

EDUFIRE.IR

Plan Review Checklist *Continued*

Plan Review Checklist (*continued*)

Water Tank

❑ Steel ❑ Wood ❑ Concrete ❑ Fiberglass ❑ NA

❑ Water tanks comply with the requirements of NFPA 22.

STEP 4: SPRINKLER SYSTEM TYPE AND COVERAGE

• Type of sprinkler system ❑ Wet [8.1] ❑ Dry [8.2] ❑ Preaction [8.3] ❑ Deluge [8.3]

• Classification of occupancy: (Chapter 4)

❑ Light hazard

❑ Ordinary: Group 1 ❑ Group 2 ❑

❑ Extra hazard: Group 1 ❑ Group 2 ❑

• Classification of commodity: (Chapter 4)

❑ Class I ❑ Group A plastic

❑ Class II ❑ Group B plastic

❑ Class III ❑ Group C plastic

❑ Class IV ❑ Mixed commodity

❑ Plastic pallet storage? Reinforced ❑ Unreinforced ❑

• Are sprinklers omitted in any areas? ❑ Yes ❑ No [9.1.1]

• If yes, are omissions allowed per NFPA 13? ❑ Yes ❑ No ❑ N/A [9.3]

• What is the area of coverage? [9.1.1(1)]

❑ Total ❑ Partial ❑ Special hazard ❑ Other

❑ All wet piping is in areas that can be maintained above 4°C (40°F) [16.4.1]

STEP 5: SPRINKLER SYSTEM COMPONENTS

The following sprinkler component information is clearly indicated on plans /specifications:

❑ Product data is included in the shop drawing submittal

❑ Make, type, model, nominal K-factor of sprinklers, and sprinkler identification number [7.2]

❑ Temperature rating and location of high-temperature sprinklers [7.2.4.1 / 9.4.2]

❑ Pipe type and schedule of wall thickness [7.3.1.1 / 27.1.3(19)]

❑ Nominal pipe size and cutting lengths of pipe (or center-to-center dimensions) [27.1.3(20)]

❑ Location and size of riser nipples [27.1.3(21)]

❑ Type of fittings and joints and location of all welds and bends [7.4.1 / 27.1.3(22)]

❑ Specifications of any sections to be shop welded and type of fittings or formations to be used [7.5.2]

❑ Type and location of hangers, sleeves, braces, and methods of securing sprinklers when applicable [27.1.3(23) / 17.1]

❑ All control valves and check valves [27.1.3(24) / 16.9]

❑ Make, type, model, and size of wet pipe, dry pipe, preaction, or deluge valves [27.1.3(26)(27) /8.1 / 8.2 / 8.3]

❑ Size and location of standpipe risers, hose outlets, hand hose, monitor nozzles, and related equipment [27.1.3(29) / 16.15]

❑ Calculation of loads for sizing and details of sway bracing [27.1.3(41) / Chapter 18]

❑ Setting for pressure-reducing valves [27.1.3(43) / 16.9.8]

❑ Manufacturer, size, type of backflow preventers [27.1.3(25) / 16.14.5]

❑ Type and amount of antifreeze solution used [27.1.3(44) / 8.6]

❑ A pressure gauge on the system and the supply [8.1.1]

© 2018 National Fire Protection Association NFPA 13 Handbook (p. 3 of 5)

Automatic Sprinkler System Plan Review Checklist. (Continued)

EDUFIRE.IR

Plan Review Checklist *Continued*

Plan Review Checklist (*continued*)

STEP 6: DESIGN

The following design information is clearly indicated on plans or specifications:

❑ Total area protected by each system on each floor [4.5 / 23.1.3(15)]
❑ Number of sprinklers on each riser per floor [23.1.3(16)]
❑ Sprinkler spacing and location verified [9.5]
❑ Spray patterns free of obstruction [9.5.5]
❑ Total number of sprinklers on each dry pipe, preaction, combined dry pipe-preaction, or deluge system [23.1.3(17)]
❑ Approximate capacity [in gal (L)] of each dry pipe system [8.2.3 / 23.1.3(18)]
❑ Pitch of pipe for dry pipe, preaction, combined dry pipe-preaction, or deluge system [16.10.3]
❑ Size and capacity for air compressor (where provided) for dry pipe, preaction, combined dry pipe-preaction, or deluge system [8.2.6.6]
❑ Details of air supply connections for other types of air supply [8.2.6]
❑ Piping provisions for flushing [27.1.3(31) / 16.6]
❑ Size, location, and arrangement of all auxiliary drain connections [16.10.5]
❑ Where equipment is to be installed as an addition to an existing system, enough detail of the existing system indicated to make all conditions clear [27.1.3]
❑ Hydraulic data nameplate (for hydraulically designed systems) [28.5]
❑ Size, location, thread type, and piping arrangement of fire department connections [27.1.3(46) / 816.12]
❑ Size, location, and arrangement of inspector's test connection [27.1.3(24) / 16.14.2]
❑ Location of main drain connection [27.1.3(24) / 16.14.1]

STEP 7: HYDRAULIC DESIGN SPECIFICATIONS

The following information has been clearly indicated on plans / specifications / hydraulic calculations:

• Type of system: ❑ Hydraulically calculated [27.2] ❑ Pipe schedule [27.5]
❑ Proper hydraulic calculations forms used?
❑ Design area and water application rate:
❑ Density/area method [19.3.3.2] ❑ Special design areas [19.3.3.4]
❑ Room design method [19.3.3.3] ❑ Special design approaches [19.4]

• Density/area method
❑ Area of operation and density noted?
❑ Area of operation reduced for: Quick-response sprinklers ❑ High-temperature sprinklers ❑
❑ Area of operation increased for: Sloped ceilings ❑ Dry pipe/double-interlock preaction systems ❑
❑ Multiple adjustments needed?

❑ Area per sprinkler [9.5.2.1]
❑ Water supply sufficient? [19.2.5.1]
❑ Allowance for in-rack sprinklers provided (where required) [27.2.5]
❑ Limitations (dimension, flow, and pressure) for listed special sprinklers specified [27.2.4.6.1]
❑ Most demanding area calculated [27.2.4]
❑ Hydraulic reference points shown on the plan that correspond with comparable reference points on the hydraulic calculation sheets [27.1.3(36)]
❑ Pipe sizes and lengths shown on the plan correspond with the sizes and lengths shown on the hydraulic calculations sheets [23.1.3(20)]
❑ Total quantity of water and pressure required noted at a common reference point for each system
❑ Relative elevations of sprinklers, junction points, and supply or reference points [27.1.3(39)]
❑ All unprotected wall openings throughout the floor protected for room design method where permitted [19.3.3.3]
❑ Pressure loss for backflow preventer, meter or other devices included in hydraulic calculations [27.2.3.3]

© 2018 National Fire Protection Association NFPA 13 Handbook (p. 4 of 5)

Automatic Sprinkler System Plan Review Checklist. (Continued)

EDUFIRE.IR

Plan Review Checklist *Continued*

Plan Review Checklist (*continued*)

STEP 8: ALARMS

The following alarm connections are clearly indicated on plans/specifications:

❑ Type and location of alarm bells [16.11.8]
❑ Fire alarm system connection [16.11.10]
❑ Type and location of waterflow switch / pressure switch [16.11.2]
❑ Type and location of low air pressure switch [8.2.6.3]
❑ Type and location of all tamper switches [16.9.3.3.1]

Reviewer: _____ Date: _____

ALL ITEMS NOT CHECKED, UNDERLINED, OR HIGHLIGHTED REQUIRE REVISION AND RESUBMITTAL.

Review Disposition:

❑ Approved ❑ Approved as noted (construction may proceed)
❑ Revise and resubmit ❑ Rejected (resubmission required)

Comments:

© 2018 National Fire Protection Association NFPA 13 Handbook (p. 5 of 5)

Automatic Sprinkler System Plan Review Checklist. (Continued)

EDUFIRE.IR

Darcy-Weisbach Calculations

Darcy-Weisbach Friction Loss Using the Moody Diagram

Friction loss can be calculated using the Darcy-Weisbach equation as provided by 27.2.2.1.3:

$$\Delta P = 0.000216 f \frac{l \rho Q^2}{d^5} \quad \textbf{(1)}$$

where:
ΔP = friction loss (psi)
f = friction loss factor from Moody diagram
l = length of pipe (ft)
ρ = density of fluid (lb/ft³)
Q = flow in pipe (gpm)
d = inside diameter of pipe (in.)
For SI units, the following equation is used:

$$\Delta P = 2.252 f \frac{l \rho Q^2}{d^5} \quad \textbf{(1a)}$$

where:
ΔP = friction loss (bar)
f = friction loss factor from Moody Diagram
l = length of pipe (m)
ρ = density of fluid (kg/m³)
Q = flow in pipe (L/min)
d = inside diameter of pipe (mm)

An explanation for each of these terms is provided next, in the order of determination.

The length and diameter of pipe, l and d, are given parameters based on the piping arrangement being calculated. The flow rate, Q, in the piping is calculated based on the required flow rate being delivered from the operating sprinklers or discharge devices supported by the piping being evaluated.

The density of the fluid, ρ, is dependent on the fluid being conveyed and the temperature. For water being conveyed at temperatures anticipated for sprinkler system installations, a nominal density of 62.4 lb/ft³ (1000 kg/m³) would be appropriate. For this condition, the Darcy-Weisbach equation would be reduced to the following:

$$\Delta P = 0.0135 f \frac{l Q^2}{d^5} \quad \textbf{(2)}$$

For SI units, the following equation is used:

$$\Delta P = 2252 f \frac{l \rho Q^2}{d^5} \quad \textbf{(2a)}$$

For other fluids, the density must be determined based on the specific fluid being conveyed and the anticipated temperature conditions. Information on the specific fluid properties can generally be obtained from the manufacturer of the product or other available sources. An example of such density information for an antifreeze, propylene glycol*, solution is illustrated in Exhibit 1.

Using the percentage by volume a density can then be selected for a given temperature from Exhibit 1. For example, selecting 50 percent by volume at a temperature of –10°F (–23.3C) yields a density of 66.35 lb/ft³ (1062.8 kg/m³).

The friction factor, f, is determined using the Moody diagram shown in Figure A.27.2.4.8.2. The use of the Moody diagram first requires the calculation of the Reynolds number, Re:

$$Re = \frac{50.6 \rho Q}{d \mu} \quad \textbf{(3)}$$

where:
ρ = density of fluid (lb/ft³)
Q = flow in pipe (gpm)
d = inside diameter of pipe (in.)
μ = dynamic viscosity [centipoise (cP)]
For SI units, the following equation is used:

$$Re = \frac{21.22 \rho Q}{d \mu} \quad \textbf{(3a)}$$

where:
ρ = density of fluid (kg/m³)
Q = flow in pipe (L/min)
d = inside diameter of pipe (mm)
μ = dynamic viscosity (cP)

The values of density, flow, and pipe diameter are as indicated above.

The dynamic viscosity of the fluid, μ, is dependent on the fluid being conveyed and the temperature. For water being conveyed at temperatures anticipated for sprinkler system installations, a nominal dynamic viscosity of 0.9 cP and nominal density of 62.4 lb/ft³ (1000 kg/m³) would be appropriate. For this condition, the Reynolds number equation would reduce to the following:

$$Re = \frac{3508 Q}{d} \quad \textbf{(4)}$$

For SI units, the following equation is used:

$$Re = \frac{23578 Q}{d} \quad \textbf{(4a)}$$

For other fluids, the dynamic viscosity must be determined based on the specific fluid being conveyed and the anticipated temperature conditions. Information on the specific fluid properties generally can be obtained from the manufacturer of the product or other available sources. An example of such dynamic viscosity information for an antifreeze, propylene glycol* solution is illustrated in Exhibit 2.

Using the percentage by volume determined above, a dynamic viscosity can then be selected for a given temperature from Exhibit 2. For example, at a temperature of –10°F (–23.3°C), a dynamic viscosity for a 50 percent by volume solution can be selected at approximately 95.97 cP.

Once all the parameters are defined, the Reynolds number can be calculated.

Where the calculated Reynolds number is not more than approximately 2000 (laminar flow zone), the calculation of friction factor, f, can be determined using the following formula:

$$f = 64/Re \quad \textbf{(5)}$$

*The use of propylene glycol as an antifreeze solution in accordance with NFPA 13 is permitted only for ESFR sprinklers where the ESFR sprinklers are listed for such use in a specific application. Calculations contained herein are for illustrative purposes only.

(Continues)

EDUFIRE.IR

Darcy-Weisbach Calculations *Continued*

Temp.	Volume Percent Propylene Glycol									
°F	0%	10%	20%	30%	40%	50%	60%	70%	80%	90%
-30							67.05	67.47	68.38	68.25
-20						66.46	66.93	67.34	68.13	68.00
-10						66.35	66.81	67.20	67.87	67.75
0					65.71	66.23	66.68	67.05	67.62	67.49
10				65.00	65.60	66.11	66.54	66.89	67.36	67.23
20			64.23	64.90	65.48	65.97	66.38	66.72	67.10	66.97
30		63.38	64.14	64.79	65.35	65.82	66.22	66.54	66.83	66.71
40	62.42	63.30	64.03	64.67	65.21	65.67	66.05	66.35	66.57	66.44
50	62.38	63.20	63.92	64.53	65.06	65.50	65.87	66.16	66.30	66.18
60	62.34	63.10	63.79	64.39	64.90	65.33	65.68	65.95	66.04	65.91
70	62.27	62.98	63.66	64.24	64.73	65.14	65.47	65.73	65.77	65.64
80	62.19	62.86	63.52	64.08	64.55	64.95	65.26	65.51	65.49	65.37
90	62.11	62.73	63.37	63.91	64.36	64.74	65.04	65.27	65.22	65.09
100	62.00	62.59	63.20	63.73	64.16	64.53	64.81	65.03	64.95	64.82
110	61.84	62.44	63.03	63.54	63.95	64.30	64.57	64.77	64.67	64.54
120	61.73	62.28	62.85	63.33	63.74	64.06	64.32	64.51	64.39	64.26
130	61.54	62.11	62.66	63.12	63.51	63.82	64.06	64.23	64.11	63.98
140	61.39	61.93	62.46	62.90	63.27	63.57	63.79	63.95	63.83	63.70
150	61.20	61.74	62.25	62.67	63.02	63.30	63.51	63.66	63.55	63.42
160	61.01	61.54	62.03	62.43	62.76	63.03	63.22	63.35	63.26	63.13
170	60.79	61.33	61.80	62.18	62.49	62.74	62.92	63.04	62.97	62.85
180	60.57	61.11	61.56	61.92	62.22	62.45	62.61	62.72	62.68	62.56
190	60.35	60.89	61.31	61.65	61.93	62.14	62.29	62.39	62.39	62.27
200	60.13	60.65	61.05	61.37	61.63	61.83	61.97	62.05	62.10	61.97
210	59.88	60.41	60.78	61.08	61.32	61.50	61.63	61.69	61.81	61.68
220	59.63	60.15	60.50	60.78	61.00	61.17	61.28	61.33	61.51	61.38
230	59.38	59.89	60.21	60.47	60.68	60.83	60.92	60.96	61.21	61.08
240	59.10	59.61	59.91	60.15	60.34	60.47	60.55	60.58	60.91	60.78
250	58.82	59.33	59.60	59.82	59.99	60.11	60.18	60.19	60.61	60.48

= Above atmospheric boiling point.

NOTE: To determine specific gravity, divide the density of the fluid by the density of water at 68°F.

Source: *Engineering and Operating Guide for DOWFROST and DOWFROSTHD Inhibited Propylene Glycol-based Heat Transfer Fluids*. (Feb. 2008). Table 9. Retrieved from http://msdssearch.dow.com/PublishedLiteratureDOWCOM/dh_010e/0901b8038010e417.pdf?filepath=heattrans/pdfs/nore

EXHIBIT 1 *Densities (lb/ft³) of Aqueous Solutions of DOWFROST Fluid.*

(Continues)

EDUFIRE.IR

Darcy-Weisbach Calculations *Continued*

Temp.	Volume Percent Propylene Glycol									
°F	0%	10%	20%	30%	40%	50%	60%	70%	80%	90%
-30							497.57	864.87	1363.75	3555.22
-20							298.75	493.93	820.58	1819.72
-10						95.97	182.96	291.28	495.68	983.05
0					40.92	61.32	114.90	177.73	303.94	558.32
10				13.42	26.99	40.62	74.19	112.20	190.41	332.02
20			5.36	9.89	18.50	27.83	49.29	73.22	122.30	205.91
30		2.80	4.23	7.46	13.12	19.66	33.68	49.32	80.66	132.67
40	1.53	2.28	3.41	5.75	9.60	14.28	23.65	34.22	54.64	88.51
50	1.30	1.89	2.79	4.52	7.21	10.65	17.05	24.41	37.99	60.93
60	1.12	1.60	2.32	3.62	5.56	8.13	12.59	17.86	27.10	43.16
70	0.98	1.38	1.95	2.94	4.38	6.34	9.51	13.38	19.79	31.37
80	0.86	1.20	1.66	2.43	3.52	5.04	7.34	10.25	14.79	23.35
90	0.76	1.05	1.43	2.04	2.88	4.08	5.77	8.00	11.29	17.75
100	0.68	0.93	1.25	1.73	2.40	3.35	4.62	6.37	8.79	13.76
110	0.61	0.83	1.10	1.49	2.03	2.79	3.76	5.15	6.97	10.86
120	0.55	0.75	0.97	1.30	1.73	2.36	3.11	4.23	5.62	8.71
130	0.51	0.68	0.87	1.14	1.50	2.02	2.61	3.53	4.60	7.09
140	0.46	0.62	0.78	1.01	1.31	1.75	2.22	2.98	3.82	5.85
150	0.43	0.57	0.71	0.91	1.16	1.53	1.91	2.54	3.22	4.89
160	0.39	0.52	0.64	0.82	1.04	1.35	1.66	2.19	2.75	4.13
170	0.37	0.48	0.59	0.74	0.93	1.20	1.45	1.91	2.37	3.52
180	0.34	0.44	0.54	0.68	0.85	1.08	1.29	1.69	2.07	3.04
190	0.32	0.41	0.50	0.62	0.77	0.97	1.15	1.50	1.82	2.64
200	0.30	0.38	0.46	0.58	0.71	0.88	1.04	1.34	1.61	2.31
210	0.28	0.36	0.43	0.54	0.66	0.81	0.94	1.21	1.45	2.04
220	0.27	0.34	0.40	0.50	0.61	0.74	0.86	1.10	1.31	1.82
230	0.25	0.32	0.38	0.47	0.57	0.69	0.79	1.00	1.19	1.63
240	0.24	0.30	0.36	0.44	0.53	0.64	0.73	0.92	1.09	1.47
250	0.23	0.28	0.34	0.42	0.50	0.59	0.68	0.85	1.00	1.33

= Above atmospheric boiling point.

Source: *Engineering and Operating Guide for DOWFROST and DOWFROSTHD Inhibited Propylene Glycol-based Heat Transfer Fluids*. (Feb. 2008). Table 13. Retrieved from http://msdssearch.dow.com/PublishedLiteratureDOWCOM/dh_010e/0901b8038010e417.pdf?filepath=heattrans/pdfs/nore

EXHIBIT 2 *Viscosities (cps) of Aqueous Solutions of DOWFROST Fluid.*

(Continues)

EDUFIRE.IR

Darcy-Weisbach Calculations *Continued*

For an example of laminar flow, consider a 5 gpm flow of water in a 10 in. diameter Schedule 10 black steel pipe. Using equation (4), the Reynolds number would be calculated as follows:

$$Re = \frac{3508 \times 5\text{ gpm}}{10.37\text{ in.}} = 1691$$

With a Reynolds number not more than 2000, the friction factor is calculated using equation (5) as follows:

$$f = \frac{64}{1691} = 0.038$$

As can be seen in the above example, pipe flow involving water as the conveyed fluid would require a very low flow rate and large pipe diameter to achieve a laminar flow condition with a Reynolds number of 2000 or less. Such a condition would be rare for water flow within fire protection systems. However, other fluids might have flow within the laminar range. For example, consider a flow rate of 50 gpm, but in this case, the fluid is the previously discussed 50 percent by volume solution of propylene glycol* at –10°F (ρ = 66.3 lb/ft³ and μ = 95.97 cP) within a 1 in. Schedule 40 wet black steel pipe. Using equation (3), the Reynolds number is calculated as follows:

$$Re = \frac{50.6 \times 66.3\text{ lb/ft}^3 \times 50\text{ gpm}}{1.049\text{ in.} \times 95.97\text{ cP}} = 1648$$

This Reynolds number is also below 2000, representative of laminar flow; however, in this case the piping is only 1 in. in diameter and the flow is significantly higher. The resultant friction factor, *f*, using equation (5) would be as follows:

$$f = \frac{64}{1648} = 0.04$$

Where the calculated Reynolds number is 4000 or more (the turbulent zone), the friction factor, *f*, is determined using the curves on the Moody diagram. The turbulent zone of the Moody diagram includes a transition zone where the friction factor, *f*, varies with the Reynolds number and a fully turbulent zone where the friction factor, *f*, remains relatively constant for a given relative roughness. To utilize those curves, the Reynolds number must be utilized along the horizontal axis along the bottom of the diagram and the relative roughness along the vertical axis to the right side of the diagram. The relative roughness is calculated as follows:

$$\text{Relative roughness} = \frac{\varepsilon}{d} \qquad \textbf{(6)}$$

where:

ε = absolute pipe roughness [in. (mm)]

d = inside diameter of pipe [in. (mm)]

Values for the absolute roughness, ε, for aged pipe are provided in Table A.27.2.4.8.2. Combining this information with that contained in Table 27.2.4.8.1 and filling in for C = 140 piping types, gives the following recommended absolute roughness, ε, for various types of aged pipe.

TABLE 1 *Absolute Pipe Roughness for Aged Pipe*

Pipe or Tube	C-Factor	ε Factor [in. (mm)]
Unlined cast or ductile iron	100	0.015 (0.375)
Galvanized or black steel (dry systems, including preaction)	100	0.015 (0.375)
Galvanized or black steel (wet systems, including deluge)	120	0.004 (0.100)
Plastic (listed) all	150	0.000084 (0.0021)
Cement-lined cast- or ductile iron	140	0.002 (0.0508)
Copper tube, brass, or stainless steel	150	0.000084 (0.0021)
Asbestos cement	140	0.002 (0.0508)
Concrete	140	0.002 (0.0508)

For an example of turbulent flow, consider a 25 gpm flow of water in a 1½ in. diameter Schedule 40 wet black steel pipe. Using equation (4), the Reynolds number would be:

$$Re = \frac{3508 \times 25\text{ gpm}}{1.61\text{ in.}} = 5.44 \times 10^4$$

With a Reynolds number greater than 4000, the application of the Moody diagram is in order. For this purpose, a relative roughness must be calculated. For the indicated 1½ in. diameter Schedule 40 wet black steel pipe, equation (6) is used to calculate the relative roughness as follows:

$$\text{Relative roughness} = \frac{0.004\text{ in.}}{1.61\text{ in.}} = 0.00248$$

Using these calculated values for the Reynolds number and the relative roughness, an estimate of the friction factor, *f*, is determined from the Moody diagram. First, locate the position of the Reynolds number on the horizontal axis of the Moody diagram and draw a vertical line extending through the height of the diagram. Second, locate the relative roughness on the vertical axis along the right side of the diagram. Following that position along the path of the heavier-weight curves on the diagram, maintaining the same approximate position between curves if so located, until it intersects with the previously drawn vertical line representing the Reynolds number. From that intersection location, read the friction factor, *f*, along the left vertical axis at the vertical height. See the example shown in Exhibit 3 using the calculated Reynolds number of 5.44×10^4 and relative roughness of 0.00248.

The estimated friction factor, *f*, from the Moody diagram is 0.0265.

As a means of verification, the Colebrook-White equation can be used to test the accuracy of the estimation. The Colebrook-White equation is as follows:

(Continues)

EDUFIRE.IR

Darcy-Weisbach Calculations *Continued*

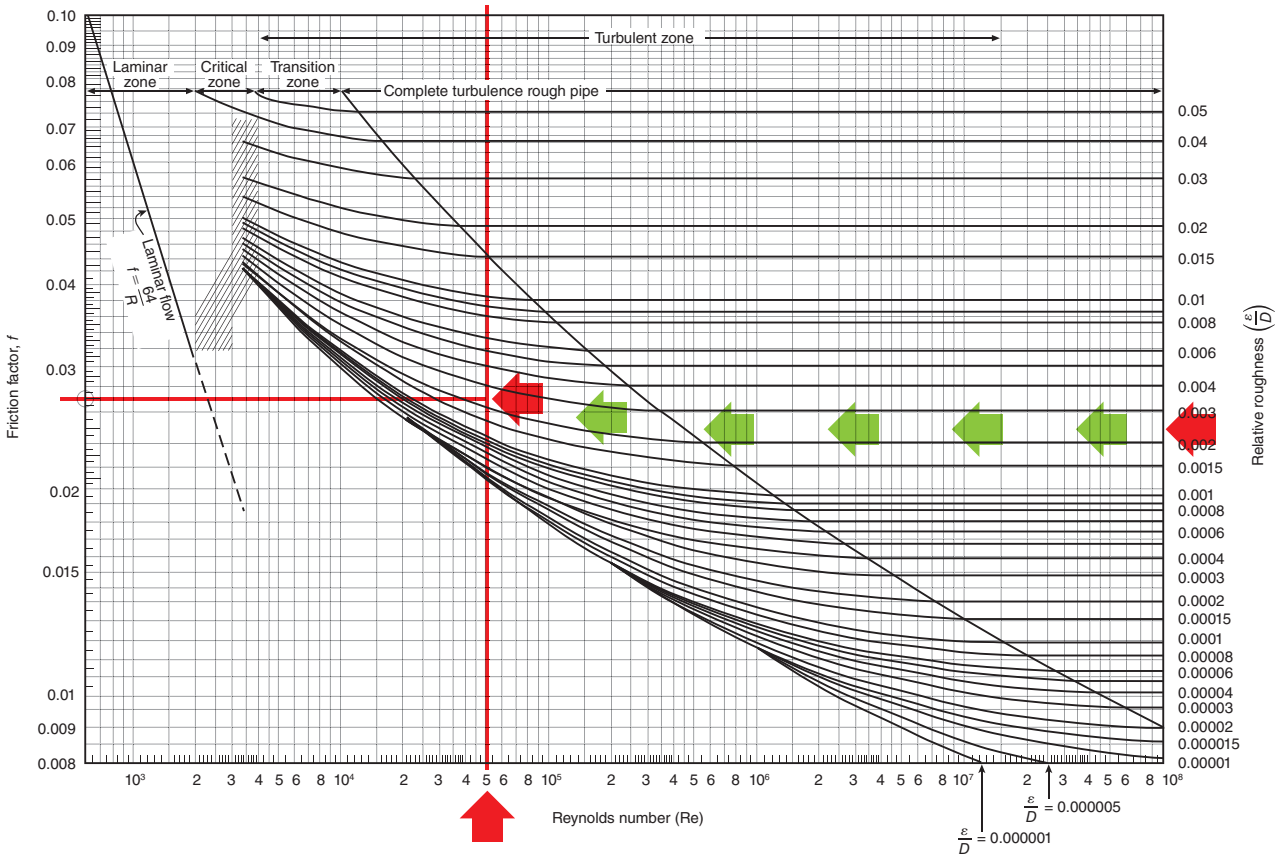

EXHIBIT 3 *Moody Diagram Example.*

$$\frac{1}{\sqrt{f}} = -2\log_{10}\left(\frac{\varepsilon}{3.7d} + \frac{2.51}{Re\sqrt{f}}\right) \quad \textbf{(7)}$$

where:

f = friction factor

ε = absolute pipe roughness [in. (mm)]

d = inside diameter of pipe [in. (mm)]

Re = Reynolds number

Because equation (7) contains the friction factor term, f, on both sides, it cannot be solved directly for f; however, it can be rearranged to solve in terms of f for comparison to the estimated f found using the Moody diagram, as follows:

$$f = \frac{1}{\left[-2\log_{10}\left(\frac{\varepsilon}{3.7d} + \frac{2.51}{Re\sqrt{f}}\right)\right]^2} \quad \textbf{(8)}$$

Substituting the estimated values for the friction factor, f, of 0.0265 from the Moody diagram, along with the pipe diameter, absolute pipe roughness, and Reynolds number, gives the following:

$$f = \frac{1}{\left[-2\log_{10}\left(\frac{0.004\text{in.}}{3.7\times1.610\text{in.}} + \frac{2.51}{5.44\times10^4\sqrt{0.0265}}\right)\right]^2} = 0.0274$$

This is reasonably accurate for calculation purposes; however, a more accurate prediction can be made by substituting this new estimated value and recalculating the friction factor, f, as follows:

$$f = \frac{1}{\left[-2\log_{10}\left(\frac{0.004\text{ in.}}{3.7\times1.610\text{ in.}} + \frac{2.51}{5.44\times10^4\sqrt{0.0265}}\right)\right]^2} = 0.0274$$

This gives a near exact match, setting the friction factor, f, at 0.0274 for the indicated flow conditions.

Where the calculated Reynolds number is between approximately 2000 and 4000, the critical zone, the determination of the friction factor, f, is subject to large uncertainties. In this region, it is difficult to determine an exact transition point between laminar

(Continues)

EDUFIRE.IR

Darcy-Weisbach Calculations *Continued*

flow and turbulent flow as well as the value for the associated friction factor, *f*. Conservatively, the application of the curves in Moody diagram would result in a larger friction factor, and should be used for this purpose.

Consider an example with a flow rate of 160 gpm of the previously discussed 50 percent propylene glycol* solution at –10°F (ρ = 66.35 lb/ft³ and μ = 95.97 cP within a 1½ in. Schedule 40 wet black steel pipe. Using equation (3), the Reynolds number is calculated as follows:

$$Re = \frac{50.6 \times 66.35\,\text{lb/ft}^3 \times 160\,\text{gpm}}{1.61\,\text{in.} \times 95.97\,cP} = 3477$$

This falls within the critical zone, making an exact determination of the friction factor, *f*; however, a conservative estimate can be made using an estimate from the Moody diagram and correction with the Colebrook-White equation.

For the indicated 1½ in. diameter Schedule 40 wet black steel pipe, equation (6) is used to calculate the relative roughness as follows:

$$\text{Relative roughness} = \frac{0.004\,\text{in.}}{1.61\,\text{in.}} = 0.00248$$

Using the indicated Reynolds number of 3477 and a relative roughness of 0.00248 with the Moody diagram using the method described above gives an estimate for the friction factor, *f*, of 0.044.

Equation (8) can be used to check the estimate, as follows:

$$f = \frac{1}{\left[-2\,log_{10}\left(\frac{0.004\,\text{in.}}{3.7 \times 1.610\,\text{in.}} + \frac{2.51}{3477\sqrt{0.044}}\right)\right]^2} = 0.044$$

Once the friction factor, *f*, is determined, the pressure loss for the piping segment in question can be calculated using equation (1). For the 160 gpm flow of 50 percent propylene glycol* solution at –10°F (–23.3°C) through 1½ in. Schedule 40 wet black steel pipe with a length of 10 ft, the pressure loss is calculated as follows:

$$\Delta P = 0.000216 \times 0.044 \frac{10\,\text{ft} \times 66.3\,\text{lb/ft}^3 \times (1603\,\text{gpm})^2}{(1.61\,\text{in.})^5} = 14.9\ \text{psi}$$

As a point of comparison, the calculated friction loss using the Hazen-Williams formula would be:

$$\Delta P = \frac{4.52 l Q^{1.85}}{C^{1.85} d^{4.87}} = \frac{4.52 \times 10\,\text{ft} \times (160\,\text{gpm})^{1.85}}{120^{1.85} \times (1.61\,\text{in.})^{4.87}} = 7.6\ \text{psi}$$

The difference in calculated friction loss illustrates the need for the use of the more accurate method afforded by the Darcy-Weisbach equation for calculation of fluids other than water.

Friction Factor, *f*, Approximations

Several approximation methods are available to determine the friction factor, *f*, explicitly for flow within the turbulent region of the Moody diagram without actually having to use the Moody diagram. One such method includes the use of the Haaland equation, as follows:

$$\frac{1}{\sqrt{f}} = -1.8\,log_{10}\left[\left(\frac{\varepsilon}{3.7d}\right)^{1.11} + \frac{6.9}{Re}\right] \quad \textbf{(9)}$$

where:

f = friction factor
ε = absolute pipe roughness [in. (mm)]
d = inside diameter of pipe [in. (mm)]
Re = Reynolds number

Rearranging equation (9) and solving for the friction factor, *f*, gives the following:

$$f = \frac{1}{\left[-1.8\,log_{10}\left[\left(\frac{\varepsilon}{3.7d}\right)^{1.11} + \frac{6.9}{Re}\right]^2\right]} \quad \textbf{(10)}$$

Testing the accuracy of this method against the previously calculated friction factor, *f*, for the example with a flow rate of 160 gpm of the previously discussed 50 percent propylene glycol* solution at –10°F within a 1½ in. Schedule 40 wet black steel pipe, having a Reynolds number of 3477 and relative roughness of 0.00248, equation (10) provides the following:

$$f = \frac{1}{\left[-1.8\,log_{10}\left[\left(\frac{0.00248}{3.7}\right)^{1.11} + \frac{6.9}{3477}\right]\right]^2} = 0.0441$$

The friction factor, *f*, previously determined using the Moody diagram, was 0.044, which is reasonably close to the approximated value of 0.0441 determined from equation (10).

Many other approximation methods are available in the technical literature.

Fitting Loss Calculations

Under the provisions of A.27.2.4.8.2, the use of the equivalent length of a fitting can be applied the same as with the use of the Hazen-Williams formula, provided the equivalent length is modified to account for differences in the internal diameter relative to Schedule 40 steel pipe and an absolute roughness, ε, of 0.004 (C = 120). This is accomplished by using the formula provided in 27.2.3.1.3.1 and the provision of 27.2.3.2.1, respectively, using the application C-factor associated with the pipe absolute roughness shown in Table A.27.2.4.8.2 and Table 1, above. The extra equivalent length would be added to the length of connected piping as required by 27.2.3.1 and the pressure loss calculated based on the combined overall length.

The use of this method has some inherent limitations in that the cited equivalent lengths and associated adjustments to the equivalent lengths provided in 27.2.3.1.3.1 and 27.2.3.2.1 are based the power function for the diameter and C-factor of 4.87 and 1.85, respectively, which are associated with the Hazen-Williams formula for calculation of friction loss. Additionally, the equivalent lengths

(Continues)

EDUFIRE.IR

Darcy-Weisbach Calculations *Continued*

TABLE 2 *Fittings and Valves Resistance Coefficient Chart, K_f*

	Fittings and Valves K_f Chart												
	½ in.	¾ in.	1 in.	1¼ in.	1½ in.	2 in.	2½ in.	3 in.	4 in.	6 in.	8 in.	10 in.	12 in.
Fittings and Valves	(15 mm)	(20 mm)	(25 mm)	(32 mm)	(40 mm)	(50 mm)	(65 mm)	(80 mm)	(100 mm)	(150 mm)	(200 mm)	(250 mm)	(300 mm)
45° Elbow	0.43	0.40	0.37	0.35	0.34	0.30	0.29	0.29	0.27	0.24	0.22	0.22	0.21
90° std elbow	0.81	0.75	0.69	0.66	0.63	0.57	0.54	0.54	0.51	0.45	0.42	0.42	0.39
90° long turn elbow	0.43	0.40	0.37	0.35	0.34	0.30	0.29	0.29	0.27	0.24	0.22	0.22	0.21
Tee or cross (flow turned 90°)	1.62	1.50	1.38	1.32	1.26	1.14	1.08	1.08	1.02	0.90	0.84	0.84	0.78
Butterfly valve	-	-	-	-	-	0.86	0.81	0.81	0.77	0.68	0.63	0.63	0.35
Gate valve	-	-	-	-	-	0.15	0.14	0.14	0.14	0.12	0.11	0.11	0.10
Swing check*	-	-	1.75	1.65	1.60	1.45	1.35	1.35	1.20	1.13	1.05	1.05	0.98

*Due to variation in design of swing check valves, the K_f indicated is considered an average.

are based on the flow of water through the fitting. The friction loss calculations performed using the Darcy-Weisbach equation utilize differing power functions and account for fluid density/viscosity differences from those of water, making the hybrid determination of pressure loss an approximation.

Alternatively, a more accurate method of pressure loss across a fitting can be calculated using the following formula:

$$\Delta P_f = K_f \times 0.0000180 \frac{\rho Q^2}{d^4} \quad \textbf{(11)}$$

where:

ΔP_f = pressure loss in the fitting (psi)
K_f = resistance coefficient for fitting
ρ = density of fluid (lb/ft³)
Q = flow in pipe (gpm)
d = inside diameter of pipe (in.)

For SI units, the following equation is used:

$$\Delta P_f = K_f \times 0.3269 \frac{\rho Q^2}{d^4} \quad \textbf{(11a)}$$

where:

ΔP_f = pressure loss in the fitting (bar)
K_f = resistance coefficient for fitting
ρ = density of fluid (kg/m³)
Q = flow in pipe (L/min)
d = inside diameter of pipe (mm)

The application of this alternative method requires that the density of the fluid and the resistance coefficient for fitting, K_f, be known. The density is determined based on the specific fluid and temperature conditions as discussed previously. The resistance coefficient for fitting, K_f, is an experimentally derived value and must be obtained from the fitting manufacturer or academic sources. Table 2 presents some representative values of the resistance coefficient for fitting, K_f.

Using the previously calculated pressure loss calculation for the flow of 160 gpm of 50 percent propylene glycol* solution at –10°F (–23.3°C) through 1½ in. Schedule 40 wet black steel pipe, gives the following values:

Friction loss per ft of pipe using the Darcy-Weisbach equation = 1.49 psi/ft

ρ = 66.35 lb/ft³

Calculating the pressure loss in a tee using equation (11) gives:

$$\Delta P_f = 1.26 \times 0.0000180 \frac{66.3\ \text{lb/ft}^3 \times (160\ \text{gpm})^2}{(1.61\ \text{in.})^4} = 5.73\ \text{psi}$$

Calculating the pressure loss using the equivalent length of a tee from Table 27.2.3.1.1 with the friction loss per ft calculated with the Darcy-Weisbach equation gives the following:

$$\Delta P_f = 1.49\ \text{psi/ft} \times 8\ \text{ft} = 11.92\ \text{psi}$$

This is a significant variation, and consideration might be given to utilization of the more accurate method of calculation. Interestingly, the pressure loss in the tee using the Hazen-Williams formula friction loss of 0.76 psi/ft and an equivalent length of 8 ft gives a pressure loss of 6.1 psi for the tee, which is fairly close to that calculated using equation (11).

Sprinkler K-Factor Adjustment

The flow through a sprinkler is characterized by the following equation:

$$Q = K\sqrt{P} \quad \textbf{(12)}$$

(Continues)

EDUFIRE.IR

Darcy-Weisbach Calculations *Continued*

where:
Q = flow rate [gpm (L/min)]
K = sprinkler K-factor [gpm/psi$^{1/2}$ (L/min•bar$^{1/2}$)]
P = pressure [psi (bar)]

The determination of the K-factor is made through laboratory testing over a range of applied pressures and measured flow rates to determine an average value. That information is used to establish the nominal K-factor within the bounds permitted by Table 7.2.2.1. This determination is made using water at standard ambient conditions. Use of established K-factors with other than water could introduce error into the calculation. While not mandated by NFPA 13, a discussion on the need to adjust the sprinkler K-factor is in order. Where flowing a fluid having a differing density than water, equation (12) is modified as follows:

$$Q = \frac{K \times 62.4\sqrt{P}}{\rho} \quad \textbf{(13)}$$

where:
Q = flow rate (gpm)
K = sprinkler K-factor (gpm/psi$^{1/2}$)
P = pressure (psi)
ρ = density of fluid (lb/ft^3)

For SI units, the following equation is used:

$$Q = \frac{K \times 1000\sqrt{P}}{\rho} \quad \textbf{(13a)}$$

where:
Q = flow rate (L/min)
K = sprinkler K-factor (L/min•bar$^{1/2}$)
P = pressure (bar)
ρ = density of fluid (kg/m^3)

The adjusted K-factor, K_a, can be calculated with the following equation:

$$K_a = \frac{K \times 62.4}{\rho} \quad \textbf{(14)}$$

For SI units, the following equation is used:

$$K_a = \frac{K \times 1000}{\rho} \quad \textbf{(14a)}$$

Consider an example with the previously discussed 50 percent propylene glycol* solution at –10°F (ρ = 66.3 lb/ft^3) through a K-25.2 gpm/psi$^{1/2}$ sprinkler at 40 psi design pressure.

Using equation (14), an adjusted K is calculated as follows:

$$K_a = \frac{25.2 \text{ gpm/psi}^{1/2} \times 62.4}{66.35 \text{ lb/ft}^3}$$
$$= 23.7 \text{ gpm/psi}^{1/2}$$

This lower K-factor indicates that it will require a higher pressure to achieve the same flow rate for the sprinkler.

To determine the required flow rate from the sprinkler, a baseline flow rate must be established using the fluid medium that was used during testing to support the sprinkler design criteria. If water was used during the baseline fire test to support the sprinkler design criteria, then that baseline flow rate would be calculated using equation (12). If another fluid was used, then the properties of that fluid would need to be utilized to determine an adjusted K-factor for that condition and the flow calculated using equation (14).

For example, consider the 50 percent by volume propylene glycol* solution discussed previously that has an established design pressure of 40 psi based on full-scale fire testing with K-25.2 gpm/psi$^{1/2}$ sprinklers. Further, consider that the fire testing was conducted with the propylene glycol* solution in the piping being at 80°F rather than the –10°F conditions that will exist during actual use. To determine the flow rate from this sprinkler at 80°F, an adjusted K-factor must be determined using equation (14). To complete this determination, the density of the fluid must be established. Using the same method employed previously with the application of Exhibit 1, the density of the 50 percent by volume propylene glycol* solution at 80°F can be determined. For this example, that density is found to be 64.95 lb/ft^3. Calculating an adjusted K-factor for this condition gives the following:

$$K_a = \frac{25.2 \text{ gpm/psi}^{1/2} \times 62.4}{64.95 \text{ lb/ft}^3}$$
$$= 24.21 \text{ gpm/psi}^{1/2}$$

Using this adjusted K-factor to determine the flow rate from the sprinkler with the fluid medium gives the following:

$$Q = 24.21 \text{ gpm/psi}^{1/2}\sqrt{40 \text{ psi}} = 153 \text{ gpm}$$

The pressure needed to achieve this flow rate from the K-25.2 gpm/psi$^{1/2}$ sprinkler with the adjusted K-factor of 23.71 gpm/psi$^{1/2}$ as determined for the 50 percent by volume propylene glycol* solution at –10°F, equation (12) must be rearranged as follows:

$$P = \left(\frac{Q}{K}\right)^2 \quad \textbf{(15)}$$

Inputting the flow rate of 153 gpm and the adjusted K-factor of 23.71 gpm/psi$^{1/2}$ gives:

$$P = \left(\frac{153 \text{ gpm}}{23.7 \text{ gpm/psi}^{1/2}}\right)^2 = 41.7 \text{ psi}$$

This results in an increase in required end head pressure for the remote sprinkler of 1.7 psi.

For this same example, if the completed testing had been conducted with water, the flow rate for the sprinkler would be established from equation (12) as follows:

$$Q = 25.2 \text{ gpm/psi}^{1/2}\sqrt{40 \text{ psi}} = 159.4 \text{ gpm}$$

Inputting the flow rate of 159.4 gpm and the adjusted K-factor of 23.7 gpm/psi$^{1/2}$ for the –10°F condition gives:

$$P = \left(\frac{159.4 \text{ gpm}}{23.7 \text{ gpm/psi}^{1/2}}\right)^2 = 45.2 \text{ psi}$$

This results in an even greater increase in required end head pressure for the remote sprinkler of 5.2 psi.

As a result, consideration should be given to making necessary adjustments to ensure calculation accuracy.

EDUFIRE.IR

Velocity Pressure Calculations

The solution of hydraulic calculations that include velocity pressure requires a recognition that the total pressure, P_T, at any point within a pipe segment comprises the sum of the normal pressure, P_N, and the velocity pressure, P_V.

$$P_T = P_N = P_V$$

Normal pressure is the pressure energy exerted in all directions within the fluid due to stored energy contained within the pressurized pipe and can be measured by a pressure gauge installed in the side of the pipe. Normal pressure is responsible for the discharge of water from an opening in the side of a pipe, such as an open sprinkler head as illustrated in Exhibit 1.

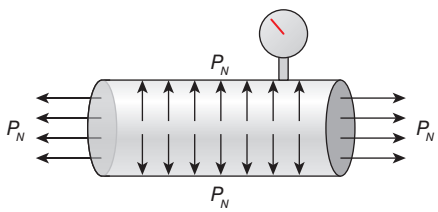

EXHIBIT 1

Velocity pressure is the pressure energy created by the moving fluid. The velocity pressure exerts pressure only in the direction of flow and is not measured by a pressure gauge connected to the side of pipe. (See Exhibit 2.) As a result, an opening in the side of the pipe is not influenced by velocity pressure within the piping since it is perpendicular to the direction of the flow; however, it should be recognized that the end sprinkler on a branch line will be influenced by both the normal pressure and the velocity pressures since the flow direction terminates into the last sprinkler. This will also be the case with sprinklers on a gridded branch line where no flow occurs in the branch line past the sprinkler.

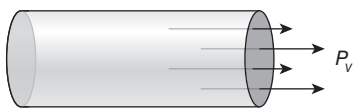

EXHIBIT 2

Typical sprinkler calculations are prepared by using the total pressure in the piping for the determination of the flow from each of the operating sprinklers as a simplified method of calculation. However, a more accurate result of the actual flows can be determined by applying the normal pressures to the operating sprinklers instead. This is determined by calculating the velocity pressure in the piping at the flowing sprinkler and subtracting it from the total pressure.

$$P_N = P_T = P_V$$

Because only the normal pressure is responsible for the flow for open sprinklers (other than the end sprinkler), it can be seen that a higher velocity pressure will result in a lower flow from the operating sprinkler as calculated from the following formula:

$$Q = K\sqrt{P_N}$$

To determine the normal pressure for use in the calculation of the flow from an operating sprinkler, the velocity pressure first must be known. Velocity pressure can be derived from the following formula for velocity head from Bernoulli's equation:

$$H_v = \frac{v^2}{2g}$$

where:
H_v = kinetic energy (ft of head)
v = water velocity (ft/sec)
g = acceleration due to gravity (32.17 ft/sec^2)

This formula provides for velocity pressure in feet of head. To convert to the more familiar fire protection units of pounds per square inch (psi), the velocity term must be converted to gallons per minute (gpm) by dividing the volume of water flowing by the area associated with the pipe diameter.

$$v = \frac{q}{A}$$

where:
q = flow rate (ft^3/sec)
A = area of pipe (ft^2)

Because the diameter of the piping typically is known, the following can be substituted for the area, A:

$$A = \frac{\pi D^2}{4}$$

where:
D = pipe diameter (ft)

This results in the following formula for velocity:

$$v = \frac{4q}{\pi D^2}$$

However, the input variables still are in cubic feet per second for flow and feet for diameter. Those units can be converted to the more familiar gallons per minute for flow and inches for diameter using the following conversions:

$$\frac{Q\,\text{gal}}{\text{min}} \cdot \frac{\text{ft}^3}{7.4805\,\text{gal}} \cdot \frac{\text{min}}{60\,\text{sec}} = \frac{Q}{7.4805 \cdot 60}\,\frac{\text{ft}^3}{\text{sec}} = q\,\frac{\text{ft}^3}{\text{sec}}$$

$$d\,\text{in}^2 \cdot \frac{\text{ft}^2}{144\,\text{in}^2} = \frac{d}{144}\,\text{ft}^2 = D\,\text{ft}^2$$

Substituting the flow in gallons per minute and the diameter in inches into the equation for velocity gives the following:

$$v = \frac{\dfrac{Q}{7.4805 \cdot 60}}{\dfrac{\pi d^2}{4 \cdot 144}} = \frac{0.408498751Q}{d^2}$$

(*Continues*)

EDUFIRE.IR

Velocity Pressure Calculations *Continued*

Substituting the result for velocity from the equation above into the equation for velocity head gives:

$$H_v = \frac{\left(\frac{0.408498751Q}{d^2}\right)^2}{2.32.17} = \frac{0.002593585Q^2}{d^4}$$

Again, this is in units of feet. To convert to pounds per square inch, a conversion of 1 ft = 0.433 psi results in the following:

$$P_v = 0.001123\frac{Q^2}{d^4}$$

where:

P_V = velocity pressure (psi)
Q = flow rate in pipe serving the sprinkler (gpm)
d = pipe diameter (in.)

Since the flow rate in the piping serving the sprinkler cannot be determined until the flow rate from the sprinkler is known, the calculation of the velocity pressure cannot be directly determined. The calculation requires the use of an iterative process of assuming a flow rate from the sprinkler to determine the velocity pressure in the piping serving the sprinkler and then determining if the resultant normal pressure would result in attaining the assumed flow rate from the sprinkler.

The application of the process is best described through the use of an example, which follows.

Determine the required flow and pressure at node 4 in Exhibit 3, including velocity pressure in the calculation.

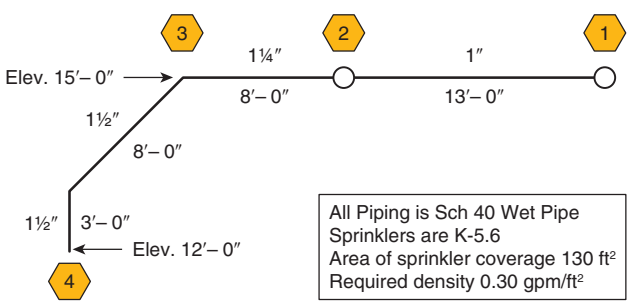

EXHIBIT 3

Step 1: Determine required flow and total pressure for sprinkler at node 1. With the required density of 0.30 gpm/ft² over the indicated area of coverage, the required flow rate is 39 gpm (0.30 gpm/ft² × 130 ft²). Because both the normal pressure and the velocity pressure act on this end sprinkler to produce flow from the operating sprinkler, the total pressure is calculated. The required total pressure to achieve the flow rate is determined by the following formula:

$$Q = K\sqrt{P_T}$$

where:

Q = flow rate from the operating sprinkler (gpm)
K = K factor of the sprinkler
P_T = total pressure (psi)

Rearranging the equation to solve for P_T gives the following:

$$P_T = \left(\frac{Q}{K}\right)^2 = \left(\frac{39}{5.6}\right)^2 = 48.5 \text{ psi}$$

These results are best tabulated in a hydraulic calculation form to keep track of the information and set a systematic method to track the progress of the calculation. Exhibit 4 illustrates the results in such a form.

Step 2: Calculate friction loss back to node 2 and determine total pressure at node 2. The friction loss can be determined using the Hazen-Williams formula as follows:

$$F_L = L \times \frac{4.52 \times Q^{1.85}}{C^{1.85} \times d^{4.87}} = 13 \times \frac{4.52 \times 39^{1.85}}{120^{1.85} \times 1.049^{4.87}} = 13 \times 0.448 = 5.82 \text{ psi}$$

where:

F_L = friction loss in a pipe segment (psi)
L = length of pipe segment (ft), including equivalent length of attached fittings, in this case, 13 ft since there is no equivalent length of additional fitting to be added
Q = flow through the pipe segment (gpm), in this case, 39 gpm
C = C-factor for the pipe segment, in this case, 120, since the piping is wet black steel
d = internal diameter of the pipe segment (in.), in this case, 1.049 in. since the piping is Sch. 40 black steel

Project Name: Velocity Pressure Example Sheet 1 of 1

Step No.	Nozzle Ident. and Location	Flow in gpm	Pipe Size	Pipe Fittings and Devices	Equiv. Pipe Length	Friction Loss psi / Foot	Pressure Summary	Normal Pressure	Notes	Ref Step
	1	q 39.0			L		P_t 48.5	P_t 48.5	K = 5.6	
					F		P_e	P_v –	q = 0.3 × 130 = 39.0 gpm	
		Q 39.0			T		P_f	P_n –	$P_t = (39/5.6)^2 = 48.5$ psi	

EXHIBIT 4

(*Continues*)

EDUFIRE.IR

Velocity Pressure Calculations *Continued*

Adding the friction loss from node 1 to node 2 to the total pressure at node 1 results in a required total pressure at node 2 of 54.32 psi. Note that there is no elevation change between nodes 1 and 2.

Tabulation of these results in the hydraulic calculation form is shown in Exhibit 5.

Project Name: Velocity Pressure Example Sheet 1 of 1

Step No.	Nozzle Ident. and Location	Flow in gpm	Pipe Size	Pipe Fittings and Devices	Equiv. Pipe Length	Friction Loss psi / Foot	Pressure Summary	Normal Pressure	Notes	Ref Step
	1	q 39.0	1.049		L 13.0	0.448	P_t 48.5	P_t 48.5	K = 5.6	
					F –		P_e –	P_v –	q = 0.3 × 130 = 39.0 gpm	
		Q			T 13.0		P_f 5.82	P_n –	$P_t = (39/5.6)^2 = 48.5$ psi	
	2	q			L		P_t 54.32	P_t 54.32		
					F		P_e –	P_v		
		Q			T		P_f	P_n		

EXHIBIT 5

Step 3: Determine normal pressure at node 2. To determine the normal pressure, the velocity pressure in the incoming pipe to node 2 from node 3 must be known. Because the incoming flow cannot be determined until the flow from the sprinkler at node 2 is known, it becomes a trial and error process. A guess of the flow from node 2 must be made and then checked against the actual available normal pressure at the node to determine if it is correct. Because it is known that the flow rate cannot be greater than that produced by the total applied pressure at the node, a guess of a flow rate slightly less than that would be in order. The total pressure of 54.32 psi calculated in Step 1 would produce a flow rate of 41.27 gpm at node 2, so a guess of 41.0 gpm would be reasonable. That would result in a total flow rate in the pipe from node 2 to 3 of 39 gpm + 41 gpm = 80 gpm. Based on that total flow, the velocity pressure in the pipe from node 3 to 2 is calculated as follows:

$$P_V = 0.001123 \frac{80^2}{1.38^4} = 1.98 \text{ psi}$$

Subtracting the velocity pressure from the normal pressure results in a normal pressure of 52.34 psi. This available normal pressure would produce a flow rate of 40.5 gpm, slightly less than the flow rate guessed above. Adjusting the guessed flow rate to 40.5 gpm and trying again results in a flow rate of 79.5 gpm with a velocity pressure of 1.95 psi and a normal pressure of 52.36 psi. This available normal pressure results in a flow rate of 40.5 gpm, so the second guess results in a match.

Adding these results to the tabulation in the hydraulic calculation form is shown in Exhibit 6.

Step 4: Calculate friction loss back to node 3 and determine total pressure at node 3. The friction loss can be determined using the Hazen-Williams formula as follows:

$$F_L = 11 \times \frac{4.52 \times 79.5^{1.85}}{120^{1.85} \times 1.38^{4.87}} = 11 \times 0.440 = 4.84 \text{ psi}$$

where:

L = 8 ft of pipe plus 3 ft of equivalent length for a standard elbow = 11 ft

Q = 79.5 gpm

C = 120 for wet black steel

d = 1.38 in. for 1¼ in. Sch. 40 black steel

Adding the friction loss from node 2 to node 3 to the total pressure at node 2 results in a required total pressure at node 3 of 59.16 psi. Note that there is no elevation change between nodes 2 and 3.

Tabulation of these results in the hydraulic calculation form is shown in Exhibit 7.

Step 5: Calculate the friction loss and elevation pressure change back to node 4 and determine total pressure at node 4. The friction loss can be determined using the Hazen-Williams formula as follows:

$$F_L = 15 \times \frac{4.52 \times 79.5^{1.85}}{120^{1.85} \times 1.61^{4.87}} = 15 \times 0.208 = 3.11 \text{ psi}$$

where:

L = 11 ft of pipe plus 4 ft of equivalent length for a standard elbow = 15 ft.

Q = 79.5 gpm

C = 120 for wet black steel

d = 1.61 in. for 1½ in. Sch. 40 black steel

(*Continues*)

EDUFIRE.IR

Velocity Pressure Calculations *Continued*

Project Name: Velocity Pressure Example Sheet 1 of 1

Step No.	Nozzle Ident. and Location	Flow in gpm	Pipe Size	Pipe Fittings and Devices	Equiv. Pipe Length	Friction Loss psi / Foot	Pressure Summary	Normal Pressure	Notes	Ref Step
	1	q 39.0	1.049		L 13.0	0.448	P_t 48.5	P_t 48.5	K = 5.6	
					F –		P_e –	P_v –	q = 0.3 × 130 = 39.0 gpm	
		Q 39.0			T 13.0		P_f 5.82	P_n –	$P_t = (39/5.6)^2 = 48.5$ psi	
	2	q 40.5	1.38		L		P_t 54.32	P_t 54.32	K = 5.6	
					F		P_e –	P_v 1.95	$P_v = 0.001123 \times 79.5^2/1.38^4 = 1.95$ psi	
		Q 79.5			T		P_f	P_n 52.37	$P_n = 54.32 - 1.95 = 52.37$ psi $q = 5.6 \times 52.36^{0.5} = 40.5$ gpm	
	3	q			L		P_t	P_t		
					F		P_e –	P_v		
		Q			T		P_f	P_n		

EXHIBIT 6

Project Name: Velocity Pressure Example Sheet 1 of 1

Step No.	Nozzle Ident. and Location	Flow in gpm	Pipe Size	Pipe Fittings and Devices	Equiv. Pipe Length	Friction Loss psi / Foot	Pressure Summary	Normal Pressure	Notes	Ref Step
	1	q 39.0	1.049		L 13.0	0.448	P_t 48.5	P_t 48.5	K = 5.6	
					F –		P_e –	P_v –	q = 0.3 × 130 = 39.0 gpm	
		Q 39.0			T 13.0		P_f 5.82	P_n –	$P_t = (39/5.6)^2 = 48.5$ psi	
	2	q 40.5	1.38		L 8.0	0.440	P_t 54.32	P_t 54.32	K = 5.6	
					F 3.0		P_e –	P_v 1.95	$P_v = 0.001123 \times 79.5^2/1.38^4 = 1.95$ psi	
		Q 79.5			T 11.0		P_f 4.84	P_n 52.37	$P_n = 54.32 - 1.95 = 52.37$ psi $q = 5.6 \times 52.36^{0.5} = 40.5$ gpm	
	3	q –			L		P_t 59.16	P_t		
					F		P_e	P_v		
		Q 79.5			T		P_f	P_n		

EXHIBIT 7

(*Continues*)

EDUFIRE.IR

Velocity Pressure Calculations *Continued*

The elevation pressure change from node 3 to node 4 can be determined by multiplying the elevation differential in feet by 0.433 psi/ft. With the indicated elevation differential of 3 ft, this results in an elevation pressure of 1.30 psi. Since the elevation change results in an increased pressure at node 4, it is added to the required total pressure at node 3 along with the friction loss from node 3 to node 4 to obtain the total pressure at node 3. This results in a required total pressure at node 3 of 63.57 psi.

Tabulation of these results in the hydraulic calculation form is shown in Exhibit 8.

Project Name: Velocity Pressure Example Sheet 1 of 1

Step No.	Nozzle Ident. and Location	Flow in gpm	Pipe Size	Pipe Fittings and Devices	Equiv. Pipe Length	Friction Loss psi / Foot	Pressure Summary	Normal Pressure	Notes	Ref Step
	1	q 39.0	1.049		L 13.0	0.448	P_t 48.5	P_t 48.5	K = 5.6	
					F –		P_e –	P_v –	q = 0.3 × 130 = 39.0 gpm	
		Q 39.0			T 13.0		P_f 5.82	P_n –	$P_t = (39/5.6)^2 = 48.5$ psi	
	2	q 40.5	1.38	E	L 8.0	0.440	P_t 54.32	P_t 54.32	K = 5.6 $P_v = 0.001123 \times 79.5^2/1.38^4 = 1.95$ psi $P_n = 54.32 - 1.95 = 52.37$ psi $q = 5.6 \times 52.36^{0.5} = 40.5$ gpm	
					F 3.0		P_e –	P_v 1.95		
		Q 79.5			T 11.0		P_f 4.84	P_n 52.37		
	3	q –	1.61		L 11.0	0.208	P_t 59.16	P_t	$P_e = 3 \times 0.433 = 1.3$ psi	
					F 4.0		P_e 1.30	P_v		
		Q 79.5			T 15.0		P_f 3.11	P_n		
	4	q –			L		P_t 63.57	P_t		
					F		P_e	P_v		
		Q 79.5			T		P_f	P_n		

EXHIBIT 8

(*Continues*)

EDUFIRE.IR

Velocity Pressure Calculations *Continued*

SAMPLE PROBLEMS

The sample problems that follow provide a variety of examples of the standard application of velocity pressure calculations applied to a number of fire protection arrangements as well as proof of concept applications resulting from such calculations.

Sample Problem No. 1

Problem Statement

Using Exhibit 9, determine the required flow and pressure at node 4 and find velocity pressure as part of the solution.

Solution

Step 1: Determine required flow and total pressure for sprinkler at node 1. With the required density of 0.30 gpm/ft² over the indicated area of coverage, the required flow rate is 30 gpm (0.30 gpm/ft² x 100 ft²). Because both the normal pressure and the velocity pressure act on this end sprinkler to produce flow from the operating sprinkler, the total pressure is calculated. The required total pressure to achieve this flow rate is determined by the following equation:

$$Q = K\sqrt{P_T}$$

Rearranging the equation to solve for P_T gives the following:

$$P_T = \left(\frac{Q}{K}\right)^2 = \left(\frac{30}{8.0}\right)^2 = 14.06 \text{ psi}$$

The result is best tabulated in a hydraulic calculation form to keep track of the information and set a systematic method to track the progress of the calculation. See Exhibit 10, at the end of this sample problem.

Step 2: Calculate friction loss back to node 2 and determine total pressure at node 2. The friction loss can be determined using the Hazen-Williams formula as follows:

$$F_L = 10 \times \frac{4.52 \times 30^{1.85}}{120^{1.85} \times 1.049^{4.87}} = 10 \times 0.276 = 2.76 \text{ psi}$$

Adding the friction loss from node 1 to node 2 to the total pressure at node 1 results in a required total pressure at node 2 of 16.82 psi. Note that there is no elevation change between nodes 1 and 2.

Step 3: Determine normal pressure at node 2. To determine the normal pressure, the velocity pressure in the incoming pipe to node 2 from node 3 must be known. Because the incoming flow cannot be determined until the flow from the sprinkler at node 2 is known, it becomes a trial and error process. A guess at the flow from node 2 must be made and then checked against the actual available normal pressure at the node to determine if it is correct. Because the flow rate cannot be greater than that produced by the total applied pressure at the node, a guess at a flow rate slightly less than this would be in order. The total pressure of 16.82 psi calculated in Step 2 would produce a flow rate of 32.8 gpm at node 2, so a guess of 32.0 gpm would be reasonable. This would result in a total flow rate in the pipe from node 3 to node 2 of 30 gpm + 32 gpm = 62 gpm. Based on this total flow, the velocity pressure in the pipe from node 3 to node 2 is calculated as follows:

$$P_V = 0.001123\frac{62^2}{1.38^4} = 1.19 \text{ psi}$$

Subtracting the velocity pressure from the normal pressure results in a normal pressure of 15.63 psi. This available normal pressure would produce a flow rate of 31.6 gpm, slightly less than the flow rate guessed above. Adjusting the guessed flow rate to 31.6 gpm and trying again results flow in a rate of 61.6 gpm with a velocity pressure of 1.17 psi and a normal pressure of 15.65 psi. This available normal pressure results in a flow rate of 31.7 gpm, slightly less than the flow rate guessed above. Adjusting the guessed flow rate to 31.7 gpm and trying again results flow in a rate of 61.7 gpm with a velocity pressure of 1.18 psi and a normal pressure of 15.64 psi. This available normal pressure results in a flow rate of 31.7 gpm, so the third guess results in a match.

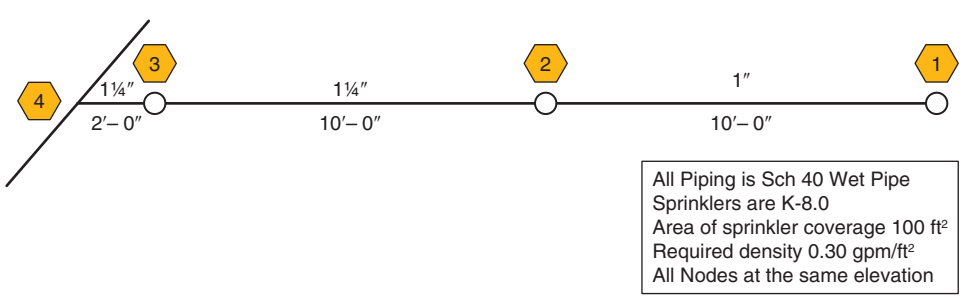

EXHIBIT 9

(Continues)

EDUFIRE.IR

Velocity Pressure Calculations *Continued*

Project Name: Velocity Pressure Calculation – Sample Problem No. 1 Sheet 1 of 1

Step No.	Nozzle Ident. and Location	Flow in gpm	Pipe Size	Pipe Fittings and Devices	Equiv. Pipe Length	Friction Loss psi / Foot	Pressure Summary	Normal Pressure	Notes	Ref Step
	1	q 30.0	1.049		L 10.0	0.276	P_t 14.06	P_t	K = 8.0	
					F –		P_e –	P_v	q = 0.3 × 100 = 30.0 gpm	
		Q 30.0			T 10.0		P_f 2.76	P_n	$P_t = (390/8.0)^2 = 14.10$ psi	
	2	q 31.6	1.38		L 10.0	0.274	P_t 16.82	P_t 16.82	K = 8.0	
					F –		P_e –	P_v 1.19	$P_v = 0.001123 \times 62^2 / 1.38^4 = 1.19$ psi	
		Q 61.6			T 10.0		P_f 2.74	P_n 15.64	$P_n = 16.82 - 1.19 = 15.63$ psi $q = 8.0 \times 15.64^{0.5} = 31.7$ gpm	
	3	q 32.8	1.38	T	L 2.0	0.604	P_t 19.57	P_t 19.57	K = 8.0	
					F 6.0		P_e –	P_v 2.76	$P_v = 0.001123 \times 96.7^2 / 1.38^4 = 2.89$ psi	
		Q 94.4			T 8.0		P_f 4.83	P_n 16.80	$P_n = 19.57 - 2.89 = 16.68$ psi $q = 8.0 \times 16.80^{0.5} = 32.8$ gpm	
	4	q –			L		P_t 24.39	P_t		
					F		P_e	P_v		
		Q 94.4			T		P_f	P_n		
		q			L		P_t	P_t		
					F		P_e	P_v		
		Q			T		P_f	P_n		
		q			L		P_t	P_t		
					F		P_e	P_v		
		Q			T		P_f	P_n		
		q			L		P_t	P_t		
					F		P_e	P_v		
		Q			T		P_f	P_n		
		q			L		P_t	P_t		
					F		P_e	P_v		
		Q			T		P_f	P_n		
		q			L		P_t	P_t		
					F		P_e	P_v		
		Q			T		P_f	P_n		
		q			L		P_t	P_t		
					F		P_e	P_v		
		Q			T		P_f	P_n		
							P_t			

EXHIBIT 10

(Continues)

EDUFIRE.IR

Velocity Pressure Calculations *Continued*

Step 4: Calculate friction loss back to node 3 and determine total pressure at node 3. The friction loss can be determined using the Hazen-Williams formula as follows:

$$F_L = 10 \times \frac{4.52 \times 61.7^{1.85}}{120^{1.85} \times 1.38^{4.87}} = 10 \times 0.274 = 2.75 \text{ psi}$$

Adding the friction loss from node 2 to node 3 to the total pressure at node 2 results in a required total pressure at node 3 of 16.82 psi. Note that there is no elevation change between nodes 2 and 3.

Step 5: Determine normal pressure at node 3. To determine the normal pressure, the velocity pressure in the incoming pipe to node 3 from node 4 must be known. The total pressure of 19.57 psi at node 3 calculated in Step 4 above would produce a flow rate of 35.4 gpm at node 3, so a guess of 35.0 gpm would be reasonable. This would result in a total flow rate in the pipe from node 4 to node 3 of 61.7 gpm + 35 gpm = 96.7 gpm. Based on this total flow, the velocity pressure in the pipe from node 4 to node 3 is calculated as follows:

$$P_V = 0.001123 \frac{96.7^2}{1.38^4} = 2.89 \text{ psi}$$

Subtracting the velocity pressure from the normal pressure results in a normal pressure of 16.68 psi. This available normal pressure would produce a flow rate of 32.7 gpm, less than the flow rate guessed above. Adjusting the guessed flow rate to 32.7 gpm results flow in a rate of 94.4 gpm with a velocity pressure of 2.76 psi and a normal pressure of 16.81 psi. This available normal pressure results in a flow rate of 32.8 gpm, slightly more than the flow rate guessed above. Adjusting the guessed flow rate to 32.8 gpm results flow in a rate of 94.5 gpm with a velocity pressure of 2.77 psi and a normal pressure of 16.80 psi. This available normal pressure results in a flow rate of 32.8 gpm, so the third guess results in a match.

Step 6: Calculate friction loss and elevation pressure change back to node 4 and determine total pressure at node 4. The friction loss can be determined using the Hazen-Williams formula as follows:

$$F_L = 8 \times \frac{4.52 \times 94.5^{1.85}}{120^{1.85} \times 1.38^{4.87}} = 8 \times 0.604 = 4.84 \text{ psi}$$

Note that the equivalent length of 8 ft is determined by adding the length of 2 ft and the equivalent length of the tee of 6 ft.

This results in a required total pressure at node 3 of 24.41 psi. Note that there is no elevation change between nodes 4 and 3. See Exhibit 10.

Sample Problem No. 2

Problem Statement

Using Exhibit 11, determine the required flow and pressure at node 6. Include velocity pressure in the calculation.

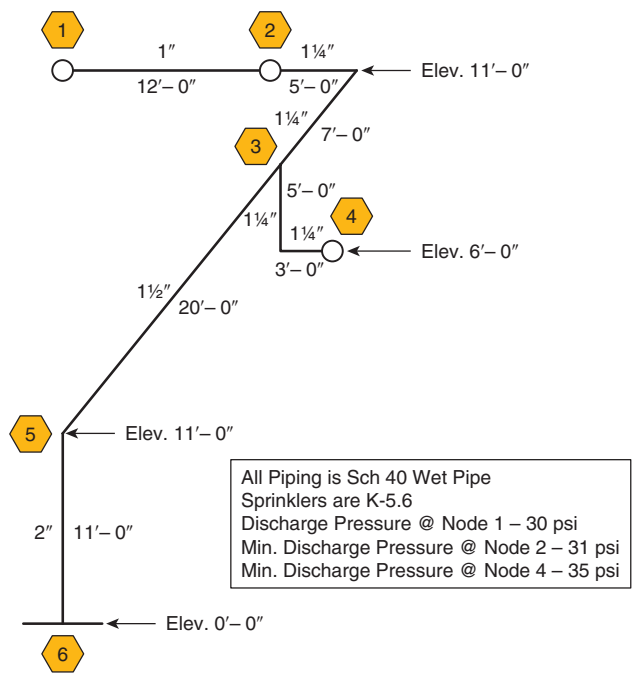

EXHIBIT 11

Solution:

Step 1: Determine required flow for sprinkler node 1. Because both the normal pressure and the velocity pressure act on this end sprinkler to produce flow from the operating sprinkler, the total pressure is used to calculate the flow. With the required pressure of 30 psi from the problem statement and a K-factor of 5.6, the flow rate is calculated as follows:

$$Q = K\sqrt{P_T} = 5.6\sqrt{30} = 30.67 \text{ gpm}$$

This result is best tabulated in a hydraulic calculation form to keep track of the information and set a systematic method to track the progress of the calculation. See Exhibit 12 at the end of this sample problem.

(Continues)

EDUFIRE.IR

Velocity Pressure Calculations *Continued*

Project Name: Velocity Pressure Calculation – Sample Problem No. 2 Sheet 1 of 1

Step No.	Nozzle Ident. and Location	Flow in gpm	Pipe Size	Pipe Fittings and Devices	Equiv. Pipe Length	Friction Loss psi / Foot	Pressure Summary	Normal Pressure	Notes	Ref Step
	1	q 30.67	1.049		L 12.0	0.287	P_t 30.0	P_t	$K = 5.6$	
					F –		P_e –	P_v	$Q = 5.6 \times 30^{0.5} = 30.67$ gpm	
		Q 30.67			T 12.0		P_f 3.44	P_n	$P_t = 30$ psi Given	
	2	q 31.79	1.38	E	L 12.0	0.281	P_t 33.44	P_t 33.44	$K = 5.6$	
					F 3.0		P_e –	P_v 1.21	$P_v = 0.001123 \times 62.46^2 / 1.38^4 = 1.21$ psi	
		Q 62.46			T 15.0		P_f 4.22	P_n 32.23	$P_n = 33.44 - 1.21 = 32.23$ psi $q = 5.6 \times 32.23^{0.5} = 31.79$ gpm	
	3	q 34.00	1.61	E	L 20.0	0.297	P_t 37.66	P_t 37.76	$K = 5.66$ from Step 5	
					F 4.0		P_e –	P_v 1.53	$P_v = 0.001123 \times 95.6^2 / 1.61^4 = 1.53$ psi	
		Q 95.6			T 24.0		P_f 7.12	P_n 36.13	$P_n = 37.66 - 1.53 = 36.13$ psi $q = 5.66 \times 36.10^{0.5} = 34.0$ gpm	
	5	q –	2.067	T	L 11.0	0.088	P_t 51.09	P_t	$P_e = 0.433 \times 11 = 4.76$ psi	
					F 10.0		P_e 4.76	P_v		
		Q 95.6			T 21.0		P_f 1.82	P_n		
	6	q			L		P_t 51.24	P_t		
					F		P_e	P_v		
		Q 95.6			T		P_f	P_n		
		q			L		P_t	P_t		
					F		P_e	P_v		
		Q			T		P_f	P_n		
		q			L		P_t	P_t		
					F		P_e	P_v		
		Q			T		P_f	P_n		
	4	q 33.15	1.38	E,T	L 8.0	0.087	P_t 35.0	P_t	$K = 5.6$	
					F 9.0		P_e –2.17	P_v	$Q = 5.6 \times 35^{0.5} = 33.15$ gpm $P_e = 0.433 \times (-5) = -2.17$ psi	
		Q 33.15			T 17.0		P_f 1.48	P_n	$P_t = 35$ psi Given	
	3	q			L		P_t 34.31	P_t	$K_e = Q/P^{0.5} = 33.15/34.31^{0.5} = 5.66$	
					F		P_e	P_v		
		Q 33.15			T		P_f	P_n		
		q			L		P_t	P_t		
					F		P_e	P_v		
		Q			T		P_f	P_n		
							P_t			

EXHIBIT 12

(Continues)

EDUFIRE.IR

Velocity Pressure Calculations *Continued*

Step 2: Calculate friction loss back to node 2 and determine total pressure at node 2. The friction loss can be determined using the Hazen-Williams formula as follows:

$$F_L = 12 \times \frac{4.52 \times 30.67^{1.85}}{120^{1.85} \times 1.049^{4.87}} = 12 \times 0.287 = 3.44 \text{ psi}$$

Adding the friction loss from node 1 to node 2 to the total pressure at node 1 results in a required total pressure at node 2 of 33.44 psi. Note that there is no elevation change between nodes 1 and 2.

Step 3: Determine normal pressure at node 2. To determine the normal pressure, the velocity pressure in the incoming pipe to node 2 from node 3 must be known. Because the incoming flow cannot be determined until the flow from the sprinkler at node 2 is known, it becomes a trial and error process. A guess at the flow from node 2 must be made and then checked against the actual available normal pressure at the node to determine if it is correct. Since it is known that the flow rate cannot be greater than that produced by the total applied pressure at the node, a guess of a flow rate slightly less than this would be in order. The total pressure of 33.44 psi calculated in Step 2 would produce a flow rate of 32.38 gpm at node 2, so a guess of 31.5 gpm would be reasonable. This would result in a total flow rate in the pipe from node 3 to node 2 of 30.67 gpm + 31.5 gpm = 62.17 gpm. Based on this total flow, the velocity pressure in the pipe from node 3 to node 2 is calculated as follows:

$$P_V = 0.001123 \frac{62.17^2}{1.38^4} = 1.20 \text{ psi}$$

Subtracting the velocity pressure from the normal pressure results in a normal pressure of 32.24 psi. This available normal pressure would produce a flow rate of 31.8 gpm, slightly more than the flow rate guessed above. Adjusting the guessed flow rate to 31.8 gpm results flow in a rate of 62.47 gpm with a velocity pressure of 1.21 psi and a normal pressure of 32.23 psi. This available normal pressure results in a flow rate of 31.79 gpm, which is close enough for calculation purposes. Additionally, the available discharge pressure (normal pressure) at node 2 exceeds the minimum required discharge pressure of 31 psi required in the problem statement.

Step 4: Calculate friction loss back to node 3 and determine total pressure at node 3. The friction loss can be determined using the Hazen-Williams formula as follows:

$$F_L = 15 \times \frac{4.52 \times 62.47^{1.85}}{120^{1.85} \times 1.38^{4.87}} = 15 \times 0.282 = 4.22 \text{ psi}$$

Note that the equivalent length of 15 ft is determined by adding the length of 12 ft and the equivalent length of the elbow of 3 ft. Adding the friction loss from node 2 to node 3 to the total pressure at node 2 results in a required total pressure at node 3 of 37.66 psi. Note that there is no elevation change between nodes 2 and 3.

Step 5: Calculate discharge and pressure for the node 4 leg to determine which leg of the system requires balancing with an equivalent K-factor.

Step 5a: Determine required flow for sprinkler at node 4. Because both the normal pressure and the velocity pressure act on this end sprinkler to produce flow from the operating sprinkler, the total pressure is used to calculate the flow. With the required pressure of 35 psi from the problem statement and a K-factor of 5.6, the flow rate is calculated as follows:

$$Q = K\sqrt{P_T} = 5.6\sqrt{35} = 33.13 \text{ gpm}$$

Step 5b: Calculate friction loss and elevation pressure change from node 4 to node 3. The friction loss can be determined using the Hazen-Williams formula as follows:

$$F_L = 17 \times \frac{4.52 \times 33.13^{1.85}}{120^{1.85} \times 1.38^{4.87}} = 17 \times 0.087 = 1.48 \text{ psi}$$

Note that the equivalent length of 17 ft is determined by adding the length of 8 ft and the equivalent length of the tee plus elbow of 9 ft.

The elevation pressure change from node 4 to node 3 can be determined by multiplying the elevation differential in feet by 0.433 psi/ft. With the indicated elevation differential of 5 ft, this results in an elevation pressure of 2.17 psi. Because the elevation change results in a decreased pressure at node 3, it is subtracted from the required total pressure at node 3 along with the friction loss from node 4 to node 3 to obtain the total pressure at node 3. This results in a required total pressure at node 3 of 34.31 psi. Since the required pressure for this leg is less than that required for the leg feeding nodes 1 and 2, an equivalent K-factor is required for this leg to balance it to the higher pressure required in the other leg. The equivalent K-factor is calculated as follows:

$$K = Q\sqrt{P} = 33.13\sqrt{34.31} = 5.66 \text{ gpm}$$

This equivalent K-factor will be used in Step 6 the same as if it were a sprinkler attached directly to the piping.

Step 6: Determine normal pressure at node 3. To determine the normal pressure, the velocity pressure in the incoming pipe to node 5 from node 3 must be known. The total pressure of 37.66

(Continues)

EDUFIRE.IR

Velocity Pressure Calculations *Continued*

psi at node 3 calculated in Step 4 would produce a flow rate of 34.73 gpm at node 3, so a guess of 34.0 gpm would be reasonable. This would result in a total flow rate in the pipe from node 4 to node 3 of 61.6 gpm + 34 gpm = 95.6 gpm. Based on this total flow, the velocity pressure in the pipe from node 4 to node 3 is calculated as follows:

$$P_V = 0.001123\frac{95.6^2}{1.61^4} = 1.53 \text{ psi}$$

Subtracting the velocity pressure from the normal pressure results in a normal pressure of 36.13 psi. Using the equivalent K-factor calculated in Step 5b, this available normal pressure would produce a flow rate of 34.0 gpm, matching that guessed above.

Step 7: Calculate friction loss back to node 5 and determine total pressure at node 5. The friction loss can be determined using the Hazen-Williams formula as follows:

$$F_L = 24 \times \frac{4.52 \times 95.6^{1.85}}{120^{1.85} \times 1.61^{4.87}} = 24 \times 0.297 = 7 \text{ psi}$$

Note that the equivalent length of 24 ft is determined by adding the length of 20 ft and the equivalent length of the elbow of 4 ft.

This results in a required total pressure at node 5 of 44.66 psi. Note that there is no elevation change between nodes 3 and 5.

Step 8: Calculate friction loss and elevation pressure change back to node 6 and determine total pressure at node 6. The friction loss can be determined using the Hazen-Williams formula as follows:

$$F_L = 21 \times \frac{4.52 \times 95.6^{1.85}}{120^{1.85} \times 2.067^{4.87}} = 21 \times 0.088 = 1.82 \text{ psi}$$

Note that the equivalent length of 21 ft is determined by adding the length of 11 ft and the equivalent length of the tee of 10 ft.

The elevation pressure change from node 5 to node 6 can be determined by multiplying the elevation differential in feet by 0.433 psi/ft. With the indicated elevation differential of 11 ft, this results in an elevation pressure of 4.76 psi. Because the elevation change results in an increased pressure at node 6, it is added to the required total pressure at node 6 along with the friction loss from node 5 to node 6 to obtain the total pressure at node 6. This results in a required total pressure at node 6 of 51.24 psi. See Exhibit 12.

Sample Problem No. 3

Problem Statement

For the illustrated discharging K-8.0 sprinkler in Exhibit 13, which has a flow rate of 36.1 gpm and a total pressure of 21.2 psi, what is the velocity pressure?

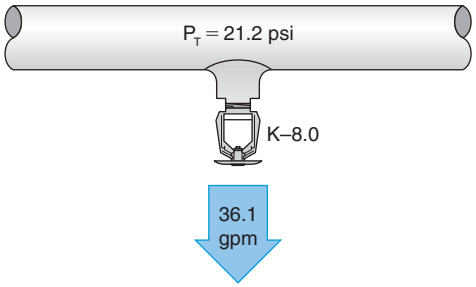

EXHIBIT 13

Solution

The problem statement does not provide a pipe diameter, flow direction, or total flow rate in the piping. As a result, the familiar equation below for determination of velocity pressure cannot be utilized.

$$P_v = 0.001123\frac{Q^2}{d^4}$$

However, the problem statement does give the information regarding the discharge flow rate from the sprinkler, which can be used along with the K-factor for the sprinkler to determine the normal pressure required to produce such flow, as follows:

$$Q = K\sqrt{P_N}$$

Rearranging the equation allows for solution of the normal pressure, P_N:

$$P_N = \left(\frac{Q}{K}\right)^2 = \left(\frac{36.1}{8.0}\right)^2 = 20.4 \text{ psi}$$

Next, the following formula is used to find the total pressure, P_T:

$$P_T = P_N + P_V$$

Rearranging the equation allows for solution of the velocity pressure, P_V:

$$P_V = P_T - P_N = 21.2 - 20.4 = 0.8 \text{ psi}$$

Sample Problem No. 4

Problem Statement

Calculate the total pressure at the suction flange and discharge flange of the fire pump shown in Exhibit 14.

Solution

The solution can be found using the following formula:

$$P_T = P_N + P_V$$

(Continues)

EDUFIRE.IR

Velocity Pressure Calculations *Continued*

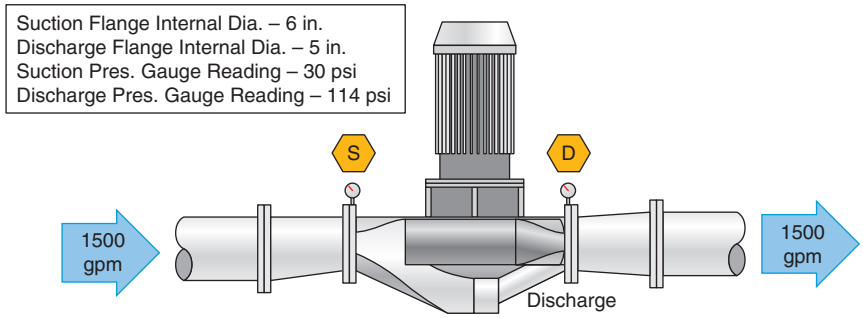

EXHIBIT 14

Because the normal pressure, P_N, is simply the gauge pressure, the values presented in the problem statement can be directly inserted.

The velocity pressure is calculated for each location based on the following formula:

$$P_V = 0.001123\frac{Q^2}{d^4}$$

Inserting the flow rate and the internal diameter for the suction and discharge flange gives the following:

$$P_{V-Suction} = 0.001123\frac{1500^2}{6^4} = 1.95 \text{ psi}$$

$$P_{V-Discharge} = 0.001123\frac{1500^2}{5^4} = 4.04 \text{ psi}$$

Inserting those values into the equations for total pressure gives the following:

$$P_{T-Suction} = 30 + 1.95 = 31.95 \text{ psi}$$

$$P_{T-Discharge} = 114 + 4.04 = 118.04 \text{ psi}$$

Sample Problem No. 5

Problem Statement

A hydrant flow test is conducted in accordance with NFPA 291, *Recommended Practice for Fire Flow Testing and Marking of Hydrants*, using hydrant A as the flow hydrant and hydrant B as the gauge hydrant. A static pressure of 100 psi is observed on the gauge at hydrant B. A residual pressure of 80 psi is observed on the gauge at hydrant B with both 2½ in. outlets flowing on hydrant A, each with an observed pitot pressure of 20 psi and an outlet coefficient of 0.9.

In Exhibit 15, what would the calculated static and residual pressures be at hydrant C during the flow test, correcting for elevation, friction loss, and velocity pressure?

Solution

It should be noted that the illustrated piping configuration includes dead-end (one directional) flow through both segments of piping, allowing for a direct determination of flow within each of the segments. Because water is incompressible, the flow out of hydrant A must flow past hydrant C up the 12 in. ductile iron pipe (DIP) and through the 6 in. DIP past hydrant B and out of hydrant A.

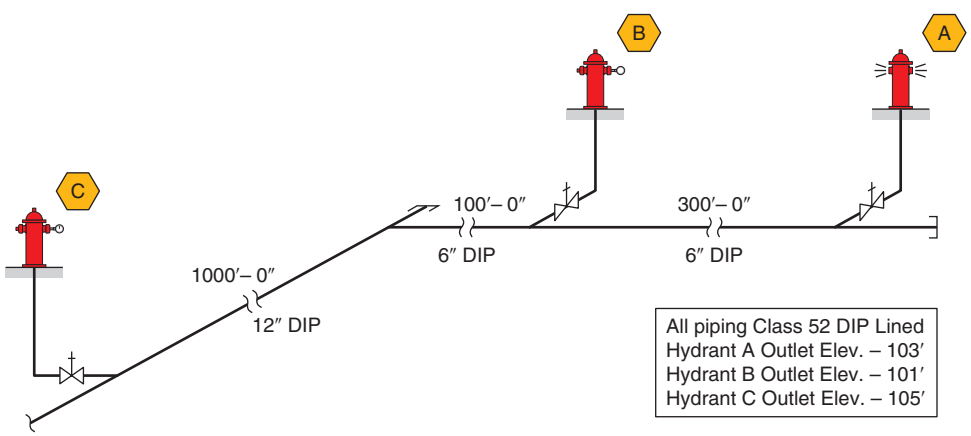

EXHIBIT 15

(Continues)

EDUFIRE.IR

Velocity Pressure Calculations *Continued*

Step 1: Calculate flow from hydrant A at the indicated pitot pressure. Use the following formula:

$$Q=29.83\times c_d\times d^2\times\sqrt{P}$$

Inserting a pitot pressure of 20 psi and a discharge coefficient of 0.9 on a 2½ in. outlet into the formula results in the following:

$$Q=29.83\times 0.9\times 2.5^2\times\sqrt{20}=750\,\text{gpm}$$

Doubling this flow to account for the two outlets flowing results in a total flow of 1500 gpm from hydrant A.

Because the normal pressure, P_N, is simply the gauge pressure, the values presented in the problem statement can be directly inserted.

Step 2: Calculate static pressure differential between hydrant B and hydrant C. The change in static pressure between the two hydrants is based solely on the elevation differential between them. Hydrant C is at an elevation of 105 ft and hydrant B is at an elevation of 101 ft for a differential of 4 ft. The difference in pressure between the two hydrants can be calculated by multiplying the elevation differential in feet by 0.433 psi/ft. With the indicated elevation differential of 4 ft, this results in an elevation pressure of 1.7 psi. Because the elevation change results in a decreased pressure at hydrant C, it is subtracted from the pressure at hydrant B to obtain a static pressure as follows:

$$S_{Hyd.C}=100-1.7=98.3\,\text{psi}$$

Step 3: Calculate residual pressure differential between hydrant B and hydrant C. The change in residual pressure between the two hydrants occurs due to the elevation change, friction loss, and change in velocity pressure between the two hydrants.

Step 3a: Determine elevation differential. The elevation differential is the same as the static pressure calculated in Step 2, or –1.7 psi from hydrant B to hydrant C.

Step 3b: Calculate friction loss. Use the Hazen-Williams formula as follows:

$$f_L=\frac{4.52\times Q^{1.85}}{C^{1.85}\times d^{4.87}}$$

This friction loss is divided into two parts, that which occurs in the 6 in. piping and that which occurs in the 12 in. piping. Each is calculated below:

For the 6 in. DIP:

$$f_{L6}=\frac{4.52\times 1500^{1.85}}{140^{1.85}\times 6.16^{4.87}}=0.052\,\text{psi/ft}$$

where:
f_{L6} = friction loss per foot of 6 in. pipe
F_{L6} = friction loss total for 6 in. pipe
f_{L12} = friction loss per foot of 12 in. pipe
F_{L12} = friction loss total for 12 in. pipe

The length of 6 in. piping is 100 ft + 55.4 ft (equivalent length of a tee) = 155.4 ft.

$$F_{L6}=f_{L6}\times L=0.052\times 155.4=8.1\,\text{psi}$$

For the 12 in. DIP:

$$f_{L12}=\frac{4.52\times 1500^{1.85}}{140^{1.85}\times 12.34^{4.87}}=0.0018\,\text{psi/ft}$$

The length of 12 in. piping is 1000 ft.

$$F_{L12}=f_{L12}\times L=0.0018\times 1000=1.8\,\text{psi}$$

Friction loss results in a higher pressure as you move upstream from hydrant B to hydrant C, so these pressures are added to that at hydrant B.

Step 3c: Calculate the difference in velocity pressure. The difference is calculated based on the change in velocity pressure in the 6 in. versus 12 in. piping using the following formula:

$$P_V=0.001123\frac{Q^2}{d^4}$$

$$P_{V6}=0.001123\frac{1500^2}{6.16^4}=1.8\,\text{psi}$$

$$P_{V12}=0.001123\frac{1500^2}{12.34^4}=0.1\,\text{psi}$$

Because the velocity pressure at hydrant C is 1.7 psi less than it is at hydrant B, the normal pressure will increase by this amount at hydrant C.

Step 3d: Sum the changes in elevation pressure, friction loss, and velocity pressure. The result is the residual pressure at hydrant C, as follows:

$$R_{Hyd.C}=80-1.7-(8.1+1.8)+1.7=70.1\,\text{psi}$$

EDUFIRE.IR

Flow Through Orifices

The flow through an orifice can be determined using a variation of the Bernoulli equation. The potential energy (pressure) and potential energy (elevation) components can be reduced to zero at the orifice outlet since no normal pressure is exerted on the discharging water stream and the elevation reference datum can be set to correspond with the outlet height. By applying these substitutions into the equation, it can be seen that the energy from a flowing orifice comprises only the velocity component. This results in the energy being defined by the following equation:

$$H=\frac{v^2}{2g} \qquad \textbf{(1)}$$

where:
H = total head [ft (m)]
v = velocity [ft/sec (m/sec)]
g = gravitational constant

By substitution of appropriate conversions, equation (1) can be presented in a more familiar form using pressure in pounds per square inch (bar) and flow in gallons per minute (liters per minute). This amended form of equation (1) is as follows:

$$P=\left(\frac{Q}{29.83d^2}\right)^2 \qquad \textbf{(2)}$$

or

$$Q=29.83d^2\sqrt{P} \qquad \textbf{(3)}$$

This represents the theoretical flow through a circular orifice; however, it must be recognized that the actual flow is affected by friction loss, stream contraction, and turbulence. These effects are taken into account by the inclusion of a discharge coefficient, c, in equation (3), resulting in the following usable formula:

$$Q=29.83d^2\sqrt{P} \qquad \textbf{(4)}$$

where:
Q = the orifice flow rate (gpm)
c = the discharge coefficient for the orifice
d = the orifice diameter (in.)
P = the velocity pressure measured at the orifice (psi)

An alternative form of equation (4) is typically utilized for sprinkler discharge and takes the following form:

$$Q=k\sqrt{P} \qquad \textbf{(5)}$$

where:
k = the overall discharge coefficient for the sprinkler, that is, $29.83cd^2$

While the discharge coefficients normally are considered constants, they do vary slightly based on the applied pressure on the orifice. An increase in applied pressure results in a slightly lower coefficient of discharge, while a lower applied pressure results in a slightly higher coefficient of discharge. Established K-factors for sprinklers are determined by averaging the measured flow rate over a range of applied pressures with the result of the calculated K-factor being the average of pressures measured across the range. This variation is generally considered negligible at the applied pressures in question for fire protection and is, for simplicity, ignored.

EDUFIRE.IR

Hardy-Cross Method

Determining the flow in a gridded piping arrangement requires the use of a systematic methodology to arrive at a sufficiently accurate answer. The traditional methodology utilized for determination of a solution using hand calculations is the Hardy-Cross method. This method was developed in 1936 by Hardy Cross, a structural engineering professor at the University of Illinois at Urbana-Champaign, as a means to solve for the flows across a gridded network of piping by utilizing a successive series of approximations and iterative corrections based on satisfying two conditions: conservation of mass and conservation of energy.

1. ***Conservation of Mass.*** The sum of the flows into and out of any junction must equal zero ($\Sigma Q = 0$). Because water is not compressible and nothing is stored or consumed within a junction, what goes in must come out. The indicated flows through the grid in Exhibit 1 illustrate this concept. By summing the flows into a junction as positive and the flows out of a junction as negative, the total must sum to zero. The inflow into node 1 is +100 gpm; therefore, the outflow from this same node must equal –100 gpm. Each successive node must also meet this criterion.

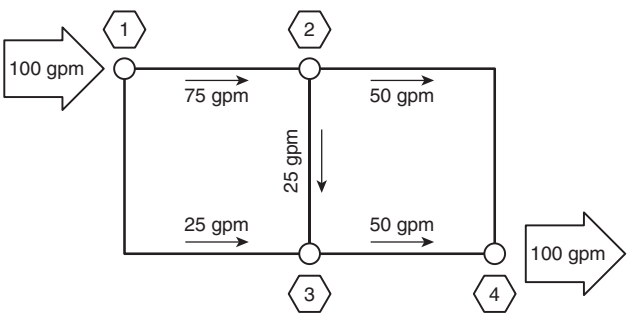

EXHIBIT 1 Conservation of Mass.

2. ***Conservation of Energy.*** The friction loss (gain) between any two junctions is independent of the path taken. This premise is based on the fact that two different pressures cannot exist at a single point in a system. Therefore, no matter the path taken between any two points in a system, the sum of the pressure losses (gains) along any path between points must be equal. A pressure loss is recorded where the path being followed is in the same direction as the flow of water and a gain is recorded where the path being followed is counter to the direction of the flow of water. While every possible path taken can be used to satisfy this concept, the summing of the losses (gains) around each of the system's loops will satisfy the system as a whole in meeting this criterion by summing of the losses (gains) to zero. This is illustrated in Exhibit 2, by summing the losses (gains) around each loop in a clockwise direction using the sign convention of a positive where the flow is in a clockwise direction and a negative where the flow is in the counterclockwise direction. For the left loop, the loss from node 1 to node 2 plus the loss from node 2 to node 3 minus the gain from node 3 to node 1 must sum to zero. The same concept must be applied to the right loop as well.

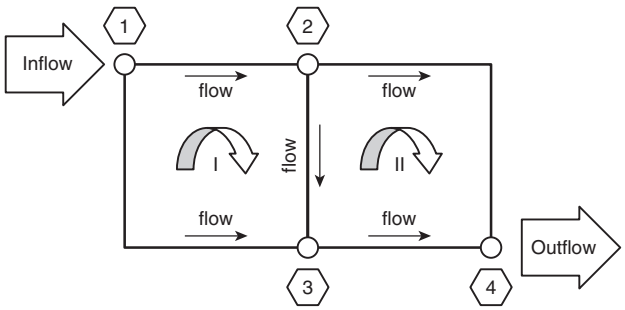

EXHIBIT 2 Conservation of Energy.

$$\text{Loop I} \rightarrow F_{L1\text{-}2} + F_{L2\text{-}3} - F_{L1\text{-}3} = 0$$

$$\text{Loop II} \rightarrow F_{L2\text{-}4} - F_{L4\text{-}3} - F_{L3\text{-}2} = 0$$

The friction loss (gain) can be determined by a number of methods; however, for the purposes of determination of friction loss (gain) for a fire sprinkler system, the provisions of NFPA 13 mandate the use of the Hazen-Williams formula for water-based systems. For calculation purposes, the friction loss in a piping segment can be represented using the pipe length × Hazen-Williams formula:

$$F_L = L \times \frac{4.52 \times Q^{1.85}}{C^{1.85} \times d^{4.87}}$$

where:

F_L = friction loss in a pipe segment (psi)

L = length of pipe segment (ft), including equivalent length of attached fittings

Q = flow through the pipe segment (gpm)

C = C-factor for the pipe segment

d = internal diameter of the pipe segment (in.)

Because each of the parameters (L, C, and d) is constant for a specific pipe segment, the friction loss can be represented by the following formula:

$$F_L = KQ^{1.85}$$

where:

$$K = \frac{L \times 4.52}{C^{1.85} \times d^{4.87}}$$

(Continues)

EDUFIRE.IR

Hardy-Cross Method *Continued*

While these concepts are fairly straightforward individually, an accounting method (Hardy-Cross method) for converging on an answer to satisfy these concepts for the entire piping network must be applied. The Hardy-Cross method involves an initial approximation of flows within each leg of the grid to satisfy the conservation of mass concept with successive iterative adjustments to correct the flows to satisfy the conservation of energy concept. This method is described in a step-by-step example for the grid illustrated in Exhibit 3 to determine the required pressure at node 1.

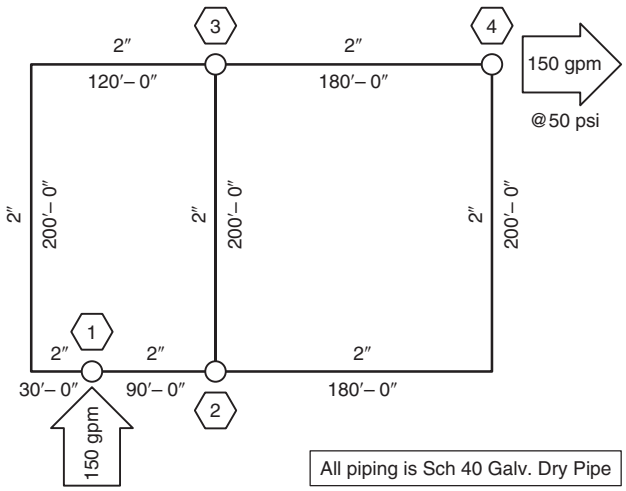

EXHIBIT 3 Example.

Step 1

Number the pipe segments and loops and set a clockwise sign convention as positive for each of the loops. See Exhibit 4, in which each pipe segment is identified by a [bracketed] Arabic numeral, and each loop is identified by a Roman numeral.

Step 2

Establish the physical criteria for each pipe segment, then calculate a constant K to determine friction loss in each segment, as follows:

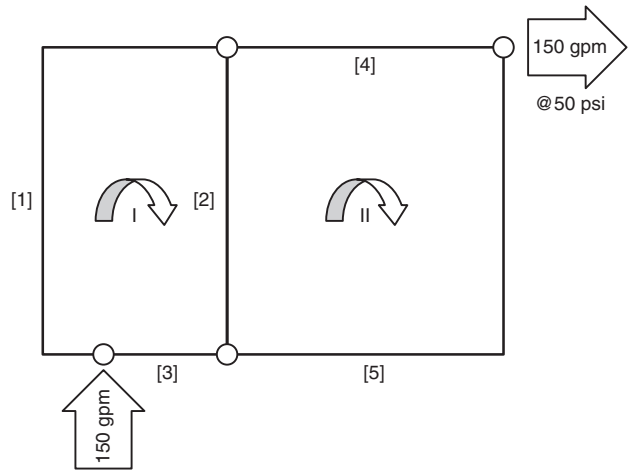

EXHIBIT 4 Step 1.

$$K = \frac{L \times 4.52}{C^{1.85} \times d^{4.87}}$$

where:

L = length of pipe segment (ft), including equivalent length of attached fittings

C = C-factor for the pipe segment

d = internal diameter of the pipe segment (in.)

This information is tabulated in Table 1.

Step 3

Assume a water flow in each pipe segment to satisfy the conservation of mass at each junction. Flow in must equal flow out. Care should be taken to try to match the assumed flows to most accurately reflect the need to follow the conservation of energy concept as well. That will aid in reducing the number of iterations required to converge on a sufficiently accurate answer. The assumed flows are as shown in Exhibit 5.

Step 4

Check the assumed flows and adjust them using a correction factor to meet the criteria established for the conservation of energy. That

TABLE 1 *Physical Criteria for Step 2*

Pipe #	Dia. (in.)	Length (ft)	Fittings	Equation Length (ft)	Total Length (ft)	C	K
1	2.067	350	T,2E	20	370	120	0.006937
2	2.067	200	2T	20	220	120	0.004124
3	2.067	90	T	10	100	120	0.001875
4	2.067	180	-	-	180	120	0.003375
5	2.067	380	T,E	15	395	120	0.007405

(Continues)

EDUFIRE.IR

Hardy-Cross Method *Continued*

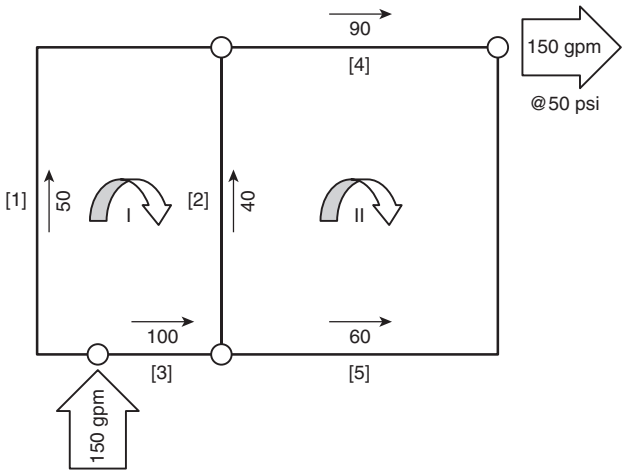

EXHIBIT 5 *Step 3.*

is done by summing the losses around each loop to determine the energy balance and applying the following correction factor:

$$\Delta = -\left[\frac{\sum KQ|Q|^{0.85}}{1.85 \times \sum K|Q|^{0.85}}\right]$$

where:

$$K = \frac{L \times 4.52}{C^{1.85} \times d^{4.87}}$$

Q = the assumed flow rate in the individual pipe segment (the flow rate is positive for flows in the clockwise direction in the loop and negative for flows in the counterclockwise direction)

$|Q|$ = the absolute value of the assumed flow rate in the individual pipe segment (the value is always positive regardless of the flow direction)

This method is best illustrated with an example of the process using a tabulation of the summation and correction for each loop (see Table 2).

For the second iteration, the following procedures are completed for each loop:

- The values in the first four columns are input from previously identified information for each of the pipe segments in the loop.
- The values for $KQ|Q|^{0.85}$ and $K|Q|^{0.85}$ are calculated for each of the pipe segments in the loops in the fifth and sixth columns.
- Once each of the pipe segments for an individual loop is input and calculated, the values of $KQ|Q|^{0.85}$ and $K|Q|^{0.85}$ are summed.
- The correction factor for the individual loop $\Delta = -\left[\frac{\sum KQ|Q|^{0.85}}{1.85 \times \sum K|Q|^{0.85}}\right]$ is calculated for that loop from the summed values of $KQ|Q|^{0.85}$ and $K|Q|^{0.85}$.

Once this process is completed for each loop, the application of an opposite sign correction factor must be applied where an individual pipe segment appears in more than one loop. For this example, pipe segment 2 appears in both loops I and II. As a result, an additional correction of +3.63 is applied to pipe segment 2 in loop I and an additional correction of –5.02 is applied to pipe segment 2 in loop II.

The correction factors are then added to the assumed Q to create a new assumed Q for the next round of correction as necessary. The summation of the losses in the fifth column can be used to determine the degree of imbalance in the pressure losses around a loop. The provisions of NFPA 13 allow a maximum imbalance of 0.5 psi. With a calculated imbalance of 3.547 psi for loop I and 3.287 psi for loop II, another iteration is needed to reduce the imbalance (see Table 3).

Again checking the imbalance in pressure losses around the loop, the calculated imbalance at the start of the iteration is 0.5528 psi for loop I and 0.764 psi for loop II. While this is slightly higher than the allowable imbalance of 0.50 psi, it should be recognized that this is the imbalance based on the assumed flows at the start of the iteration and that the new assumed flows will result in a further reduction in the imbalance. This can

TABLE 2 *First Iteration*

Loop	Pipe	K	Assumed Q	$KQ\|Q\|^{0.85}$	$K\|Q\|^{0.85}$	Δ	New Q
I	1	0.006937	50	9.644	0.1929	5.02	55.02
	2	0.004124	– 40	–3.795	0.09487	5.02 + 3.63	–31.35
	3	0.001875	–100	–9.396	0.09396	5.02	–94.98
			$\sum k$	–3.547	0.3817	Δ = –[–3.547/(1.85 × 0.3817)] = 5.00	
II	2	0.004124	40	3.795	0.09487	–3.63 – 5.02	31.35
	4	0.003375	90	13.92	0.1546	–3.63	86.37
	5	0.007405	– 60	–14.43	0.2404	–3.63	–63.63
			$\sum k$	3.287	0.4899	Δ = –[3.287/(1.85 × 0.4899)] = –3.63	

(Continues)

EDUFIRE.IR

Hardy-Cross Method *Continued*

TABLE 3 *Second Iteration*

Loop	Pipe	K	Assumed Q	$K\,Q\lvert Q\rvert^{0.85}$	$K\lvert Q\rvert^{0.85}$	Δ	New Q
I	1	0.006937	55.02	11.51	0.2092	–0.79	54.23
	2	0.004124	–31.35	–2.418	0.07712	–0.79 -0.86	–33.01
	3	0.001875	–94.98	–8.541	0.08993	–0.79	–95.77
			$\sum k$	0.5528	0.3762	Δ = –[0.5528/(1.85 × 0.3762)] = –0.79	
II	2	0.004124	31.35	2.418	0.07712	0.86+0.79	33.01
	4	0.003375	86.37	12.90	0.1493	0.86	87.24
	5	0.007405	–63.63	–16.08	0.2527	0.86	–62.76
			$\sum k$	–0.764	0.4792	Δ = –[–0.764/(1.85 × 0.4792)] = 0.86	

be checked by completing the first five columns of Table 3 as shown in Table 4.

This indicates an imbalance of 0.1268 psi for loop I and 0.1173 psi for loop II, both of which are less than the allowable imbalance of 0.50 psi.

The pressure loss from node 1 to node 4 can be determined by summing the pressure loss in pipe segments 3 and 5. This can be extracted from the data contained in the Table 3. The pressure loss in pipe segment 3 going from node 1 to node 2 is 8.674 psi, and the pressure loss in pipe segment 5 going from node 2 to node 4 is 15.68 psi. Summing those losses and adding the result to the required pressure at node 4 of 50 psi results in a required pressure of 74.354 psi at node 1.

TABLE 4 *Third Iteration*

Loop	Pipe	K	Assumed Q	$K\,Q\lvert Q\rvert^{0.85}$	$K\lvert Q\rvert^{0.85}$	Δ	New Q
I	1	0.006937	54.23	11.21			
	2	0.004124	–33.01	–2.659			
	3	0.001875	–95.77	–8.674			
			$\sum k$	–0.1268			
II	2	0.004124	33.01	2.659			
	4	0.003375	87.24	13.14			
	5	0.007405	–62.76	–15.68			
			$\sum k$	0.1173			

(Continues)

EDUFIRE.IR

Hardy-Cross Method *Continued*

Hardy-Cross Worksheet

Loop	*Pipe*	*K*	*Assumed Q*	$K\,Q\lvert Q\rvert^{0.85}$	$K\,\lvert Q\rvert^{0.85}$	Δ	*New Q*

$$K=\frac{L\times 4.52}{C^{1.85}*\times d^{4.87}} \qquad \Delta=-\left[\frac{\sum KQ\lvert Q\rvert^{0.85}}{1.85\times\sum K\lvert Q\rvert^{0.85}}\right]$$

EDUFIRE.IR

Simple Loop Calculations

The friction loss through a looped piping system requires further application of the concepts of conservation of energy and conservation of mass. The conservation of energy within a looped piping system requires that the friction difference between any two points is the same no matter the path taken. The following application of these concepts is presented for a simple loop arrangement. A simple loop is defined as having only one inflow point and one outflow point and two paths of travel between those two points. The concept of conservation of energy and mass can be illustrated for a simple loop in Exhibit 1 with the friction loss between points A and B being equal through leg 1 and leg 2.

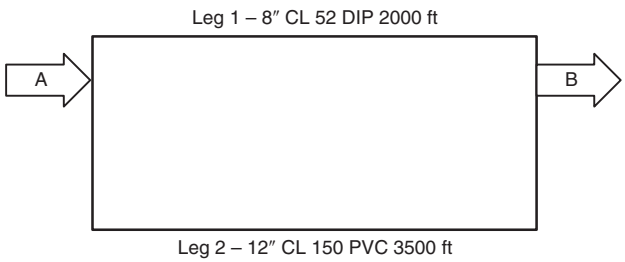

***EXHIBIT 1** Simple Loop Example.*

The conservation of mass requires that the sum of flows into and out of any point must sum to zero since water is essentially incompressible. Assuming a sign convention of positive for flow into a node and negative for flow out of a node, the conservation of mass for the simple loop in Exhibit 1 can be illustrated as:

$$Q_{\text{Into A}} - Q_{\text{Leg1}} - Q_{\text{Leg2}} = 0$$

or

$$-Q_{\text{Out of B}} + Q_{\text{Leg1}} + Q_{\text{Leg2}} = 0$$

where:
Q_{out} = flow out of the loop
Q_{leg1} = flow through leg 1 of the loop
Q_{leg2} = flow through leg 2 of the loop

Assuming a flow 1500 gpm into point A results in the following:

$$Q_{\text{Leg1}} + Q_{\text{Leg2}} = 1500$$

or

$$Q_{\text{Leg2}} = 1500 - Q_{\text{Leg1}}$$

Following through with the example, the friction loss through leg 1 and leg 2 can be calculated using the Hazen-Williams formula.

$$p_{\text{Leg1}} = \frac{4.52 \times Q_{\text{Leg1}}^{1.85}}{140^{1.85} \times 8.27^{4.87}} \times 2000$$

$$p_{\text{Leg2}} = \frac{4.52 \times Q_{\text{Leg2}}^{1.85}}{150^{1.85} \times 11.73^{4.87}} \times 3500$$

substituting $Q_{\text{Leg2}} = 1500 - Q_{\text{Leg1}}$ gives

$$p_{\text{Leg2}} = \frac{4.52 \times (1500 - Q_{\text{Leg1}})^{1.85}}{150^{1.85} \times 11.73^{4.87}} \times 3500$$

The friction loss can be determined for each leg of the loop by a trial and error method by assuming a flow for leg 1, solving for $p_{\text{Leg 1}}$ and $p_{\text{Leg 2}}$, making appropriate adjustments to the assumed flow until the friction loss in both legs is equal. For the above example, if a flow of 750 gpm in leg 1 is assumed, the resulting friction loss in each leg is calculated as:

$$p_{\text{Leg1}} = \frac{4.52 \times 750_{\text{Leg1}}^{1.85}}{140^{1.85} \times 8.27^{4.87}} \times 2000 = 6.86 \text{ psi}$$

$$p_{\text{Leg2}} = \frac{4.52 \times (1500 - 750)^{1.85}}{150^{1.85} \times 11.73^{4.87}} \times 3500 = 1.93 \text{ psi}$$

Obviously, p_{Leg1} is not equal to p_{Leg2}; therefore, the assumed flow was not correct and an adjustment to the assumed flow rate is required. The adjustment to the assumed flow rate must be such that the friction loss in leg 1 is decreased and the friction loss in leg 2 is increased.

Assuming a new flow rate of 500 gpm in leg 1, the resulting friction loss in each leg is calculated as follows:

$$p_{\text{Leg1}} = \frac{4.52 \times 500^{1.85}}{140^{1.85} \times 8.27^{4.87}} \times 2000 = 3.24 \text{ psi}$$

$$p_{\text{Leg2}} = \frac{4.52 \times (1500 - 500)^{1.85}}{150^{1.85} \times 11.73^{4.87}} \times 3500 = 3.28 \text{ psi}$$

Again, a comparison of the friction loss in both legs finds the values to be almost identical, which indicates that the assumed flow rate and the calculated flow rate are sufficiently correct. While the calculated values are not identical, they are close enough for calculation purposes. In fact, a balance within 0.5 psi is acceptable under the provisions of NFPA 13.

For simple loops that involve the same size and type of piping for each leg of the loop, a simplified method for determining the flow within any leg of the loop can be determined using the following equation:

$$Q_1 = \frac{Q_T}{(L_1 / L_2)^{0.54} + 1} \quad \textbf{(1)}$$

where:
Q_1 = flow through leg 1 of the loop
Q_T = total flow through the loop
L_1 = pipe length for leg 1 of the loop
L_2 = pipe length for leg 2 of the loop

(Continues)

EDUFIRE.IR

Simple Loop Calculations *Continued*

Alternatively, an equivalent length can be calculated for the entire loop based on the following formula:

$$L_{el} = \left(\frac{1}{(L_1 / L_2)^{0.54} + 1} \right)^{1.85} \times L_1 \qquad \textbf{(2)}$$

where:

L_{el} = length of pipe equivalent to a simple loop
L_1 = pipe length for leg 1 of the loop
L_2 = pipe length for leg 2 of the loop

While these equations are useful for calculations involving loops with piping of the same type and diameter, many practical problems involve the use of different pipe types and diameters within the same loop. For those situations, the length of each individual section of piping can be converted to an equivalent length of a common piping for calculation purposes using the following formula:

$$L_{eq} = \left(\frac{D_2}{D_1} \right)^{4.87} \left(\frac{C_2}{C_1} \right)^{1.85} \times L_1 \qquad \textbf{(3)}$$

L_{eq} = length of pipe equivalent to the converted section of piping
L_1 = length of pipe being converted from
D_1 = diameter of the pipe being converted from
D_2 = diameter of the pipe being converted to
C_1 = C-factor of the pipe being converted from
C_2 = C-factor of the pipe being converted to

This equation can be used directly on a straight run of piping containing different pipes being converted into an equivalent single pipe section. It then can be used in combination with the loop equations to determine flow within each leg of a loop. As an example, consider, the piping configuration indicated in Exhibit 1. Equation (3) is used to convert leg 2 of the loop into an equivalent length of 8 in. Class 52 DIP as follows:

$$L_{eq}(\text{Leg}\,2) = \left(\frac{8.27}{11.73} \right)^{4.87} \left(\frac{140}{150} \right)^{1.85} \times 3500 = 562\,\text{ft}$$

Inputting this value along with that for leg 1 into Equation (1) results in a flow rate through leg 1 of the loop as follows:

$$Q_1 = \frac{1500}{(2000/562)^{0.54} + 1} = 502.6\,\text{gpm}$$

This value provides a quick determination of the flow rate and the friction loss through a simple loop system without the necessity of having to utilize the trial and error method discussed earlier.

EDUFIRE.IR

Remote Areas

The 1966 edition of NFPA 13 was the first to include a chapter that dealt with hydraulic calculations. The following sentence is from that edition: "The design area shall be the hydraulically most remote area and shall include all sprinklers on both sides of the cross main." This sentence meant that, if the system shown in Figure A.27.4.2(b) were to be calculated, the 10 sprinklers on the end of the system (five on each side of the cross main), plus two on the next branch line, would be included in the calculation.

However, under certain conditions, such as where sprinklers were spaced 13 ft (3.96 m) apart on a branch line, where the branch lines were spaced 10 ft (3.05 m) apart, and where the design area included 12 sprinklers, some designers calculated three sprinklers on a branch line [3 × 13 ft = 39 ft (3 × 3.96 m = 11.9 m)] over four branch lines [4 × 10 ft = 40 ft (4 × 3.05 m = 12.2 m)]. This approach resulted in a design area that was nearly a perfect square. A square-shaped design area would be inadequate if four sprinklers operated on the branch line. Therefore, the requirement that the shape of the area of operation be rectangular, with the length of the longer side along the branch line direction having a dimension of $1.2\sqrt{A}$, was eventually added to provide a degree of safety in the design.

Gridded systems, along with the specification of a square-shaped design area, first appeared in the 1975 edition of NFPA 13: "For gridded systems, the design area shall be the hydraulically most remote area which approaches a square." This requirement was adopted because it did not seem logical to calculate all the sprinklers on one line of a grid, which had been done for tree systems since 1966.

In later editions of NFPA 13, the characteristic square design area was changed to a rectangular area. The longer sides of the rectangle must be at least 1.2 times greater in length than its shorter side. The dimension of the rectangle that is parallel to the branch lines must be the longer dimension to account for the possibility that a fire could spread in that direction and open multiple sprinklers on a single branch line before opening sprinklers on other branch lines. To require more water to flow through a smaller number of individual branch lines is hydraulically more demanding than to require the same demand to be supplied by more branch lines with fewer operating sprinklers. Obviously, a worst-case scenario would be to make the designer calculate all the sprinklers on the remote branch line. However, at a certain point, the fire is much more likely to spread to areas under adjacent branch lines than to spread entirely under one branch line. Part of the rationale behind design areas is an attempt to predict where heat from a fire will travel.

It should be noted that the design area is not always a single rectangle. The design area can consist of two rectangles where the number of sprinklers on the branch line closest to the water supply is less than the number of sprinklers on the most remote branch line. This situation frequently occurs where one or two sprinklers must be added to the design area to ensure that the number of sprinklers is sufficient to physically cover the full design area requirement.

Where sprinklers are not uniformly spaced, the same general rules apply in determining design areas. There are no neat formulas for determining the number of sprinklers in the design area or the maximum number of sprinklers to include on any single branch line. Instead, the length of the design area needs to be determined (using the rule of 1.2 times the square root of the design area), and all the sprinklers that cover any part of the design area length need to be included in the design area. Once the sprinklers on the most remote branch line have been established, adjacent sprinklers on additional branch lines closer to the water supply must be added until the area encompassed by the sprinklers exceeds the total design area. Then, on the branch line closest to the water supply, sprinklers can be dropped from the design area if they are the least demanding sprinklers on the branch line and still allow the remaining sprinklers to physically cover the required design area.

Following is an example that illustrates nonuniform sprinkler spacing requirements. Sprinklers are located in an ordinary hazard occupancy in accordance with the spacing rules, but, due to the location of walls and potential obstructions, the spacing is not uniform. Sprinklers are located as shown in the plan view in Exhibit 1. For the sake of this example, only the sprinklers, cross main, and branch lines near the design area are shown.

If the ceiling in the building is 20 ft (6.1 m) in height, a density/area can be selected from the curves in Figure 19.3.3.1.1, and the area can be reduced by 25 percent if quick-response

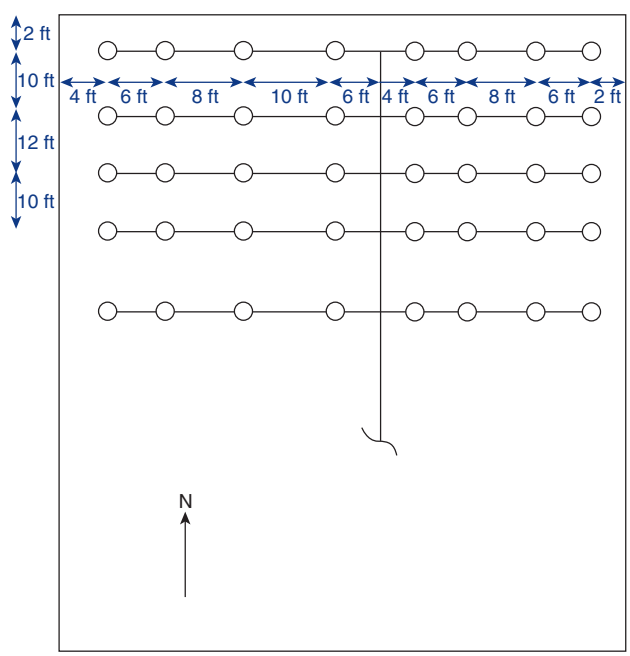

For SI units, 1 ft = 0.3 m.

EXHIBIT 1 *Design Area Example with Nonuniform Spacing of Sprinklers.*

(Continues)

EDUFIRE.IR

Remote Areas *Continued*

sprinklers are installed as provided by 19.3.3.2.3.1. Therefore, the final design area for this example is 1125 ft² (104.25 m²) [1500 ft² × 0.75 = 1125 ft² (139 m² × 0.75 = 104.25 m²)]. Using the rule for 1.2 times the square root of the design area, the length of the design area parallel to the branch lines must be at least 40.25 ft (12.3 m) long [1.2 times the square root of 1125 ft² (104.25 m²)]. The design area needs to start in the northwest corner of the building (most remote from the water supply) and continue to the east, picking up all sprinklers that cover area within 40.25 ft (12.3 m) of the corner, as shown in Exhibit 2. Note that the design area has to include the five sprinklers labeled A, B, C, D, and E. Sprinkler F is not included in the design area, because sprinkler E is permitted to cover more than 2.25 ft (0.69 m) to its east to reach the full length of 40.25 ft (12.3 m). This raises an interesting discussion regarding the boundary between sprinklers and branch lines. To express it simply, the boundary between sprinklers and branch lines is generally considered to be the halfway point between the two. However, in this case, sprinkler E is 10 ft (3.0 m) away from sprinkler D to the west. Using the $S \times L$ rules of 9.5.2, dimension S for sprinkler E is 10 ft (3.0 m), allowing sprinkler E to cover up to 5 ft (1.5 m) to its east, which, in this case, it will, adding a safety factor along the branch line, resulting in a design area with a distance along the branch line of 43 ft (13.1 m).

With the dimension parallel to the branch line established, the next step is to pick up more branch lines. Using the adjacent sprinklers on the next branch line, the design area would be only 774 ft² (43 ft × 18 ft) [72 m² (13.1 m × 5.5 m)], which is short of the goal of 1125 ft² (104.25 m²), so it is necessary to go to the third branch line, as shown in Exhibit 3. However, all the adjacent sprinklers on the third branch line give a larger than necessary design area [1247 ft² (116 m²)], so it is possible to consider removing some of the sprinklers on the third branch line until the design area goal of 1125 ft² (104.25 m²) is reached.

The first sprinkler to consider eliminating from the design area is sprinkler G, as shown in Exhibit 4. Sprinkler G is farthest from the water supply and will activate at the lowest pressure (due to friction loss) of any sprinkler under consideration on the third branch line. It is counterintuitive to say that the sprinklers farthest from the water supply are the least demanding, but they *are*, in fact, the least demanding during this portion of the calculations. Any sprinkler closer to the water supply will open at a higher pressure and will discharge more water. That extra water needs to be accounted for in the design of the system.

Sprinkler G covers an area of 77 ft² (6.13 m²) and can be eliminated from the design area, leaving a total design area of 1181 ft² (109.7 m²). Sprinkler H in Exhibit 4 covers much more area than sprinkler G and cannot be eliminated, because it would decrease the area to below 1125 ft² (104.25 m²). The design area is then the 14 sprinklers on three branch lines, as shown in Exhibit 4, including sprinklers H, I, J, and K. Note that sprinkler L was not included in the design area (even though the case could be made that it is more

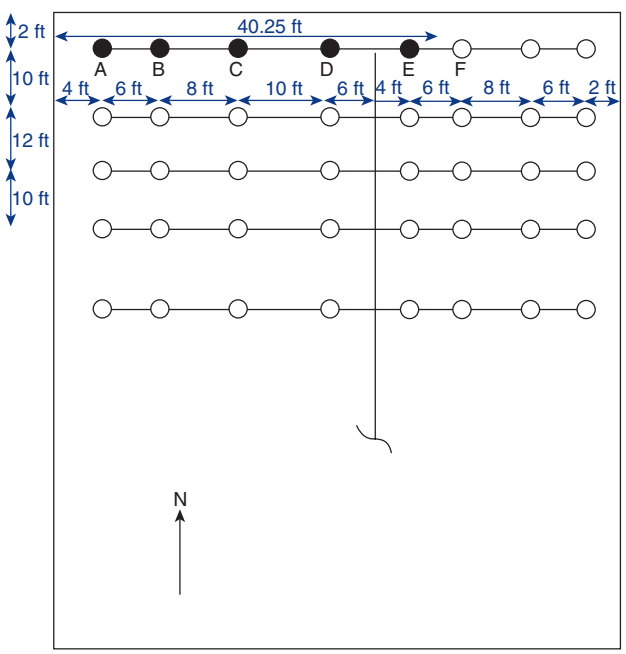

For SI units, 1 ft = 0.3 m.

EXHIBIT 2 *Applying Rule for 1.2 Times Square Root of Design Area.*

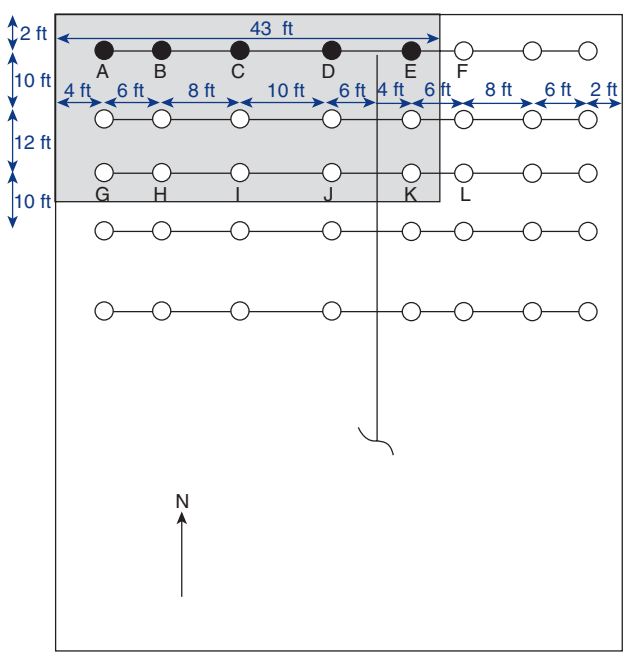

For SI units, 1 ft = 0.3 m.

EXHIBIT 3 *Covering More Than Minimum Required Design Area.*

(Continues)

EDUFIRE.IR

Remote Areas *Continued*

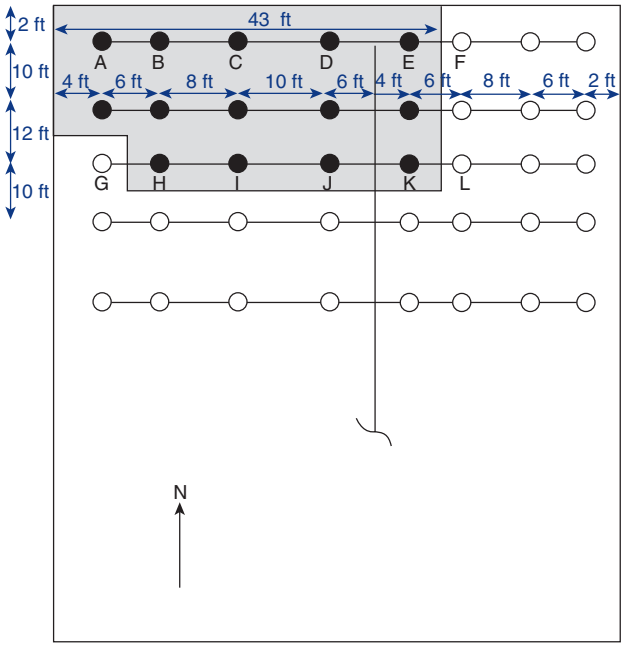

For SI units, 1 ft = 0.3 m.

***EXHIBIT 4** Final Design Area for Example.*

demanding than sprinkler H), nor was it ever considered, because it is not adjacent to any of the original sprinklers in the design area on any of the first two branch lines, which are anchored in the northwest corner of the building.

To determine the total number of sprinklers in the design area and along a branch line, the proper geometric area for system design, which is selected from the curves, tables, and figures in Chapter 19 through Chapter 25, must be verified. Additionally, the number of sprinklers to be calculated also must be verified against the geometry of the design area. This requirement is frequently misinterpreted and misapplied. Such a situation usually arises when sprinklers are not symmetrically spaced and are not spaced exactly at one-half the allowable distance from the wall. In actuality, most sprinkler systems are affected by this situation.

Exhibit 5 illustrates an example of a design area calculated incorrectly, resulting in an area less than that selected from Chapter 19. The area of coverage for the sprinklers in Exhibit 5 might appear to be 104 ft² (9.7 m²) [$A_s = S \times L$ = 13 ft × 8 ft (3.96 m × 2.4 m)]. Sprinklers E, F, H, and I are covering this actual area. However, sprinklers A, B, C, D, and G are covering a physical area of something less than 104 ft² (9.7 m²) because of their position adjacent to the walls. The actual area of coverage for sprinkler A is 80.5 ft² (7.5 m²) [11.5 ft × 7 ft (3.5 m × 2.1 m)]; for both sprinkler B and sprinkler C, 91 ft² (8.45 m²) [7 ft × 13 ft (2.1 m × 3.96 m)]; and for both sprinkler D and sprinkler G, 92 ft² (8.55 m²) [11.5 ft × 8 ft (3.5 m × 2.4 m)]. If the determination of the total number of sprinklers is based on 104 ft² (9.7 m²), the actual design area will be less than 1500 ft² (139 m²), which is permitted only under certain conditions, as specified in Chapter 19. To provide the required design area of 1500 ft² (139 m²), additional sprinklers must be included, which will increase the overall system demand in terms of flow and pressure.

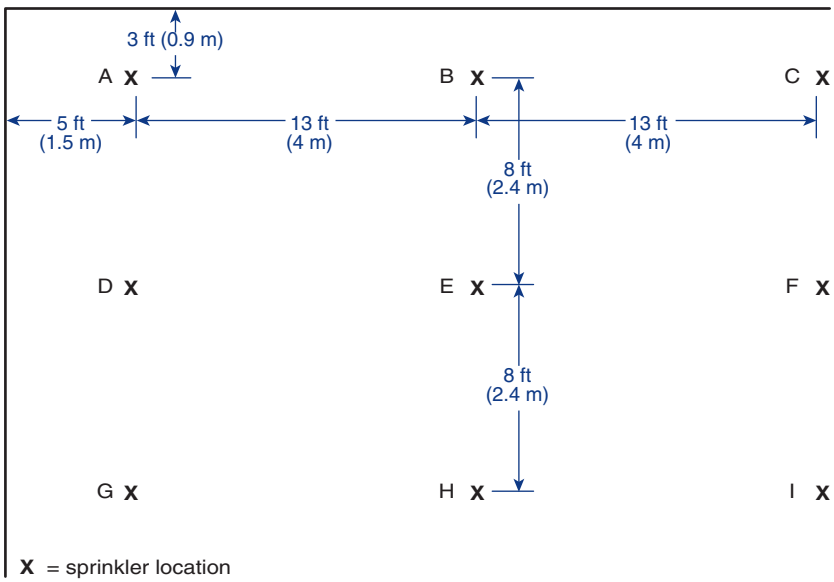

***EXHIBIT 5** Sprinkler Spacing.*

(Continues)

EDUFIRE.IR

Remote Areas *Continued*

The requirements of 27.2.4.2.3 were added to the 1980 edition of NFPA 13 for clarification and are illustrated by system *D* in Figure A.27.2.4.1(a). Note that the design area's longer dimension is along the cross main.

In all cases shown in Figure A.27.2.4.1(a), the area of sprinkler operation becomes a unit of measurement defined by the number of sprinklers rather than by a unit of length, such as feet or meters. Because fractional parts of a sprinkler cannot operate, the conventional rules for rounding off numbers do not apply, and the numbers are always rounded up. Thus, if the application of the rectangular area rule results in the need to calculate 5.07 sprinklers on a branch line, six sprinklers must be included, as provided by 27.2.4.2.2.

EDUFIRE.IR

EDUFIRE.IR

CHAPTER

28

Systems Acceptance

REORGANIZATION NOTE

This chapter was Chapter 25 in the 2016 edition of NFPA 13. The entire chapter was carried over and sections renumbered to incorporate the Chapter 28 prefix.

Chapter 28 contains acceptance testing requirements for aboveground portions of sprinkler systems. Although the title for Section 28.1 references private fire service mains, those requirements are provided in Section 6.10, Testing and Acceptance, which applies to underground piping.

The approval process for system acceptance is important in verifying the design and installation of the system. The requirements of Chapter 28 provide a minimum framework to establish acceptance of the sprinkler system. These final steps in the design and installation of a sprinkler system confirm that the basic requirements of NFPA 13 are satisfied, that the work was completed in an acceptable manner, and that the system is ready to be turned over to the customer. Failure to comply with system acceptance requirements will likely delay the issuance of the building's certificate of occupancy. Remedying any deficiency in the sprinkler system design or installation discovered after the building is occupied is likely to be extremely costly. In addition, the ability to complete remedial work might require removal of construction features such as drop ceilings, walls, or soffits to access sprinkler system components.

28.1 Approval of Sprinkler Systems and Private Fire Service Mains.

The installing contractor shall do the following:

(1) Notify the authority having jurisdiction and the property owner or the property owner's authorized representative of the time and date testing will be performed
(2) Perform all required acceptance tests *(see Section 28.2)*
(3) Complete and sign the appropriate contractor's material and test certificate(s) *(see Figure 28.1)*
(4) Remove all caps and straps prior to placing the sprinkler system in service

The authority having jurisdiction might want to have a representative present during acceptance testing, which is the reason for the requirement in item (1) of Section 28.1. The authority having jurisdiction is responsible for informing the property owner or the property owner's authorized representative, either directly or through the installing contractor or design engineer, that the authority having jurisdiction wants to be present during testing. The property owner or the property owner's authorized representative is obligated to comply with such a request and to give the authority having jurisdiction advance notice of the testing time and date. Failure to do so can result in the need to repeat the tests.

The property owner might want to witness the acceptance testing or have an authorized representative witness the acceptance testing. The installing contractor is responsible for notifying the owner of the time and date of testing to allow the responsible parties to be present during the acceptance testing as indicated in item (1). The minimum required acceptance tests are included in Section 28.2.

EDUFIRE.IR

ASK THE AHJ

If the installing contractor submits a completed Material and Test Certificate, have all the requirements of Chapter 28 been met?

No. There are additional requirements in Chapter 28 that do not appear on the certificate in Figure 28.1.

The material and test certificate for aboveground installations referenced in item (3) of Section 28.1 is shown in Figure 28.1. This is often referred to as the "A Cert," or aboveground certificate. The material and test certificate for underground piping, often referred to as the "U Cert," or underground certificate, is shown in Figure 6.10.1. Both certificates, which are required as part of the acceptance of a sprinkler system, help to verify that the materials used and the tests performed are in accordance with the requirements of NFPA 13. It is important to recognize that the certificates do not include all information for acceptance of a system. A general information sign, which is mandated by Section 28.6, requires additional information such as the number and locations of auxiliary drains and vents. After the system has been accepted and turned over to the owner, NFPA 25, *Standard for the Inspection, Testing, and Maintenance of Water-Based Fire Protection Systems,* becomes applicable.

NFPA 25 requires that the material and test certificate for aboveground installations be retained for the life of the system to provide a record of the test results, which can be used for comparison with future tests. Completion of all applicable portions of the material and test certificate for each installed system is extremely important.

Item (4) of Section 28.1 demonstrates that the aboveground certificate is not all inclusive — removal of protective caps or protective straps from sprinklers is necessary to ensure proper operation. Many sprinklers are provided with protective caps or straps for protection of sprinkler operating elements during shipping, handling, and construction. Exhibit 28.1 illustrates one of many protective cap designs. To prevent damage to the sprinklers after installation while other work is being performed around them, the protective caps should remain on the sprinklers for as long as practical. However, they must be removed before the system is placed in service. For that reason, the contractor's material and test certificate for aboveground piping includes a line to confirm that the protective caps and straps have been removed. This is an important step since the protective caps or straps could affect the ability of the sprinkler to operate properly or affect sprinkler spray during discharge.

EXHIBIT 28.1 *Sprinkler with Protective Cap.*

EDUFIRE.IR

Contractor's Material and Test Certificate for Aboveground Piping

PROCEDURE

Upon completion of work, inspection and tests shall be made by the contractor's representative and witnessed by the property owner or their authorized agent. All defects shall be corrected and system left in service before contractor's personnel finally leave the job.

A certificate shall be filled out and signed by both representatives. Copies shall be prepared for approving authorities, owners, and contractor. It is understood the owner's representative's signature in no way prejudices any claim against contractor for faulty material, poor workmanship, or failure to comply with approving authority's requirements or local ordinances.

Property name	Date
Property address	
New installation?	❑ Yes ❑ No
Modification? If yes, complete applicable portions of the form.	❑ Yes ❑ No
Provide a description of the scope of work on page 3.	

Plans	Accepted by approving authorities (names)	
	Address	
	Installation conforms to accepted plans	❑ Yes ❑ No
	Equipment used is approved If no, explain deviations	❑ Yes ❑ No
Instructions	Has person in charge of fire equipment been instructed as to location of control valves and care and maintenance of this new equipment? If no, explain	❑ Yes ❑ No
	Have copies of the following been left on the premises?	❑ Yes ❑ No
	1. System components instructions	❑ Yes ❑ No
	2. Care and maintenance instructions	❑ Yes ❑ No
	3. NFPA 25	❑ Yes ❑ No
Location of system	Supplies buildings	

Sprinklers	Make	Model	Year of manufacture	Orifice size	Quantity	Temperature rating

Pipe and fittings

Type of pipe _____

Type of fittings _____

Alarm valve or flow indicator	Alarm device			Maximum time to operate through test connection	
	Type	Make	Model	Minutes	Seconds

Dry pipe operating test	Dry valve			Q. O. D.		
	Make	Model	Serial no.	Make	Model	Serial no.

	Time to trip through test connection[a,b]		Water pressure	Air pressure	Trip point air pressure	Time water reached test outlet[a,b]		Alarm operated properly	
	Minutes	Seconds	psi	psi	psi	Minutes	Seconds	Yes	No
Without Q.O.D.									
With Q.O.D.									

If no, explain

© 2018 National Fire Protection Association NFPA 13 (p. 1 of 3)

[a] Measured from time inspector's test connection is opened.
[b] NFPA 13 only requires the 60-second limitation in specific sections.

FIGURE 28.1 *Contractor's Material and Test Certificate for Aboveground Piping.*

EDUFIRE.IR

Deluge and preaction valves

Operation ❑ Pneumatic ❑ Electric ❑ Hydraulics

Piping supervised ❑ Yes ❑ No | Detecting media supervised ❑ Yes ❑ No

Does valve operate from the manual trip, remote, or both control stations? ❑ Yes ❑ No

Is there an accessible facility in each circuit for testing? ❑ Yes ❑ No | If no, explain

Make	Model	Does each circuit operate supervision loss alarm?		Does each circuit operate valve release?		Maximum time to operate release	
		Yes	No	Yes	No	Minutes	Seconds

Pressure-reducing valve test

Location and floor	Make and model	Setting	Static pressure		Residual pressure (flowing)		Flow rate
			Inlet (psi)	Outlet (psi)	Inlet (psi)	Outlet (psi)	Flow (gpm)

Backflow device forward flow test

Indicate means used for forward flow test of backflow device: _____

When means to test device was opened, was system flow demand created? ❑ Yes ❑ No ❑ N/A

Test description

Hydrostatic: Hydrostatic tests shall be made at not less than 200 psi (13.8 bar) for 2 hours or 50 psi (3.4 bar) above static pressure in excess of 150 psi (10.3 bar) for 2 hours. Differential dry pipe valve clappers shall be left open during the test to prevent damage. All aboveground piping leakage shall be stopped.

Pneumatic: Establish 40 psi (2.7 bar) air pressure and measure drop, which shall not exceed 1½ psi (0.1 bar) in 24 hours. Test pressure tanks at normal water level and air pressure and measure air pressure drop, which shall not exceed 1½ psi (0.1 bar) in 24 hours.

Tests

All piping hydrostatically tested at _____ psi (____ bar) for _____ hours ❑ Yes ❑ No | If no, state reason

Dry piping pneumatically tested ❑ Yes ❑ No

Equipment operates properly ❑ Yes ❑ No

Do you certify as the sprinkler contractor that additives and corrosive chemicals, sodium silicate or derivatives of sodium silicate, brine, or other corrosive chemicals were not used for testing systems or stopping leaks? ❑ Yes ❑ No

Drain test | Reading of gauge located near water supply test connection: _____ psi (____ bar) | Residual pressure with valve in test connection open wide: _____ psi (____ bar)

Underground mains and lead-in connections to system risers flushed before connection made to sprinkler piping

Verified by copy of the Contractor's Material and Test Certificate for Underground Piping. ❑ Yes ❑ No | Other Explain

Flushed by installer of underground sprinkler piping ❑ Yes ❑ No

If powder-driven fasteners are used in concrete, has representative sample testing been satisfactorily completed? ❑ Yes ❑ No | If no, explain

Blank testing gaskets

Number used	Locations	Number removed

Welding

Welding piping ❑ Yes ❑ No

If yes . . .

Do you certify as the sprinkler contractor that welding procedures used complied with the minimum requirements of AWS B2.1, ASME Section IX *Welding and Brazing Qualifications,* or other applicable qualification standard as required by the AHJ? ❑ Yes ❑ No

Do you certify that all welding was performed by welders or welding operators qualified in accordance with the minimum requirements of AWS B2.1, ASME Section IX *Welding and Brazing Qualifications,* or other applicable qualification standard as required by the AHJ? ❑ Yes ❑ No

Do you certify that the welding was conducted in compliance with a documented quality control procedure to ensure that (1) all discs are retrieved; (2) that openings in piping are smooth, that slag and other welding residue are removed; (3) the internal diameters of piping are not penetrated; (4) completed welds are free from cracks, incomplete fusion, surface porosity greater than 1/16 in. (1.6 mm) diameter, undercut deeper than the lesser of 25% of the wall thickness or 1/32 in. (0.8 mm); and (5) completed circumferential butt weld reinforcement does not exceed 3/32 in. (2.4 mm)? ❑ Yes ❑ No

© 2018 National Fire Protection Association NFPA 13 (p. 2 of 3)

FIGURE 28.1 *Continued*

EDUFIRE.IR

Cutouts (discs)	Do you certify that you have a control feature to ensure that all cutouts (discs) are retrieved?		❑ Yes ❑ No
Hydraulic data nameplate	Nameplate provided ❑ Yes ❑ No	If no, explain	
Sprinkler contractor removed all caps and straps? ❑ Yes ❑ No			
Remarks	Date left in service with all control valves open		
Signatures	Name of sprinkler contractor		
	Tests witnessed by		
	The property owner or their authorized agent (signed)	Title	Date
	For sprinkler contractor (signed)	Title	Date
Additional explanations and notes			

© 2018 National Fire Protection Association NFPA 13 (p. 3 of 3)

FIGURE 28.1 *Continued*

EDUFIRE.IR

28.2 Acceptance Requirements.

28.2.1* Hydrostatic Tests.

A.28.2.1 The use of noncombustible compressed gas to increase the pressure in a water-filled system is an acceptable test procedure.

28.2.1.1 Unless permitted by 28.2.1.3 through 28.2.1.5, all piping and attached appurtenances subjected to system working pressure shall be hydrostatically tested at 200 psi (14 bar) and shall maintain that pressure without loss for 2 hours.

The measures of success for inside sprinkler piping under a hydrostatic test are no visible leakage and no loss of pressure in the 2-hour test period.

N **28.2.1.2** Loss shall be determined by a drop in gauge pressure or visual leakage.

28.2.1.3 Portions of systems normally subjected to system working pressures in excess of 150 psi (10 bar) shall be tested as described in 28.2.1.1, at a pressure of 50 psi (3.4 bar) in excess of system working pressure.

During a hydrostatic test, it is important to remember that temperature changes affect the pressure readings of the tested systems. The expansion or contraction of the air in the system due to the temperature affects the pressure shown on the gauge. Such fluctuations apply to both hydrostatic and pneumatic tests because trapped air is in the system even in a hydrostatic test. The pressure reading is not an indication of a change in the amount of internal air or water or a sign of a leak but, rather, an indication that the expansion or contraction of air molecules caused the pressure to fluctuate. For example, if the system was put under pressure when the temperature was 65°F (18°C) and the temperature dropped to 40°F (4°C) by the end of the test, the gauge would indicate less pressure, even if no leaks occurred. Conversely, if the temperature rose to 90°F (32°C), the pressure would increase, even though no additional air or water was pumped into the system. Planning hydrostatic tests for times when temperature changes will be minimal would be ideal. However, the availability of the authority having jurisdiction or the owner's representatives might not allow such scheduling.

ASK THE AHJ

If the installing contractor is proposing an air pressure test at the pressures required for a hydrostatic test, can the authority having jurisdiction accept the results if a hydrostatic test is not conducted?

No. Air is a compressible gas, so a system pressurized to 225 psi (15 bar) or higher will have a lot of stored energy. If a portion of the system fails, components could be thrown with violent and dangerous force. It is not encouraged that an authority having jurisdiction or any personnel conduct or witness such a test. The other concern is that there is no standard for such a pressure test. Therefore, if there is any pressure loss during the test, there will be nothing against which to compare the pressure loss to see if the system passed or failed the test.

Where system pressures are in excess of 150 psi (10.3 bar), the hydrostatic test must be conducted at a pressure of 50 psi (3.4 bar) in excess of the working pressure, as indicated in 28.2.1.3. This requirement is intended to ensure system integrity for such high-pressure systems.

28.2.1.4 Where cold weather will not permit testing with water, an interim air test shall be permitted to be conducted as described in 28.2.2. This provision shall not remove or replace the requirement for conducting the hydrostatic test as described in 28.2.1.1.

Where a danger of water freezing in the system exists, the air test in 28.2.2.1 for dry pipe and double interlock systems is permitted by 28.2.1.4 as an interim substitute for the hydrostatic test. This substitution is intended to provide a temporary means to allow for occupancy or continuation of construction during conditions under which the temperature would be cause for concern. However, the standard hydrostatic test also must be performed once it is possible to do so without danger of freezing.

EDUFIRE.IR

28.2.1.5* The test pressure shall be read from a gauge located at the low elevation point of the system or portion being tested. The pressures in piping at higher elevations shall be permitted to be less than 200 psi (14 bar) when accounting for elevation losses. Systems or portions of systems that can be isolated shall be permitted to be tested separately.

A.28.2.1.5 As an example, in a system that had piping at an elevation that was 25 ft (7.6 m) higher than the test gauge, an acceptable pressure during the hydrostatic test is 189 psi (13 bar) at the top of the system due to the loss of 11 psi (0.8 bar) in elevation pressure [25 ft × 0.433 psi/ft = 11 psi (.8 bar)].

The example A.28.2.1.5 clarifies that 200 psi is not necessary at all points within the sprinkler system. The hydrostatic test pressure is measured at the lowest elevation in the system or portion of the system being tested. Testing at the high point of the system, which, due to static head, would increase the test pressure significantly, is not considered necessary. The procedure is carried out in this way because that application of pressure typically occurs at the lower elevation, and the high pressures would not be anticipated at the higher elevations in the system.

Where piping is concealed or when some portions of a system must be completed before adjacent parts are completed, it is advisable to isolate and test each area separately. For example, if part of the system is to be located above a ceiling at a high elevation, it would be wise to test that part of the installation before the ceiling is complete and the scaffolding is removed, to facilitate visual leak checking and to avoid potential water damage to the ceiling should a leak occur during the test.

28.2.1.6* Additives, corrosive chemicals such as sodium silicate, or derivatives of sodium silicate, brine, or similar acting chemicals shall not be used while hydrostatically testing systems or for stopping leaks.

A.28.2.1.6 Bacterial inhibitors and other chemicals that are approved and used for the prevention and mitigation of MIC and that do not adversely affect the fire-fighting properties of the water or the performance of the fire sprinkler system components are not prohibited.

Water additives, such as sodium silicate, that are intended to plug small system leaks during hydrostatic testing can clog small orifices, bind sprinkler parts, and delay or even prevent operation. These chemicals tend to harden when exposed to air and can create significant obstructions later when they detach themselves from the internal portions of the pipe. For those reasons, water additives for stopping leaks should never be used on sprinkler systems.

Where biocides and corrosion-inhibiting chemical additives are used, the public water authority, environmental department, or health department should be contacted to determine if any regulations on water discharge or collection exist in that jurisdiction. Drain water discharge containing biocides might be cause for concern in jurisdictions where water treatment processes use bacteria. The biocides might kill the bacteria necessary to complete the water treatment. Use of orthophosphates and other corrosion-inhibiting chemicals might also trigger requirements for fees, permits, or restrictions based on pH. In many jurisdictions, a pH less than 12 is acceptable. However, the requirements can vary from one jurisdiction to the next.

Warnings to firefighters, maintenance personnel, and occupants about chemical additives might be necessary if exposure to those additives can cause skin irritation or other health-related concerns.

28.2.1.7 Piping between the exterior fire department connection and the check valve in the fire department inlet pipe shall be hydrostatically tested in the same manner as the balance of the system. After repair or replacement work affecting the fire department connection, the piping between the exterior and the check valve in the fire department inlet pipe shall be isolated and hydrostatically tested at 150 psi (10 bar).

For fire department connection piping in new installations, a 2-hour hydrostatic test is required at not less than 200 psi (13.8 bar) but at not less than 50 psi (3.4 bar) above the maximum expected static pressure. The requirements of 28.2.1.1 and 28.2.1.2 apply to fire department connections having aboveground piping. For repair or replacement work on fire department connection piping, a 2-hour hydrostatic test is required at not less than 150 psi (10.3 bar). Other portions of pipe, such as the inspector's test connection

FAQ [28.2.1.7]

Is the fire department connection piping required to be hydrostatically tested?

Yes, the entire run of piping from the fire department connection is intended to be hydrostatically tested. The intent of 28.2.1.7 is to clarify that the piping from the check valve to the hose connection is required to undergo a hydrostatic test even though it is not normally subjected to water pressure.

EDUFIRE.IR

DESIGNER'S CORNER [28.2.1.5]

When a hydrostatic test is being conducted, are all portions of the system piping required to be exposed to a pressure of 200 psi (13.8 bar)?

No. The test pressure of 200 psi (13.8 bar) is intended to be applied at the low point in the system. That means the pressure at the top of the system will be less than 200 psi (13.8 bar). Depending on the elevation difference between the top of the system and the lowest point in the system, the pressure at the top could be significantly below 200 psi (13.8 bar).

For example, if the sprinkler system has a riser 40 ft (12 m) high, the pressure at the top of the system will be 183 psi (12.6 bar) when the pressure at the bottom of the system is 200 psi (13.8 bar). The pressure at the top of the system can be calculated by multiplying the distance between the highest point in the system and the lowest point by 0.433 (.098 bar/m) and then subtracting the difference from 200. This calculation method is acceptable and in accordance with the rules of NFPA 13.

The hydrostatic test pressure of 200 psi (13.8 bar) in a typical sprinkler system was selected by adding a safety margin of 50 psi (3.4 bar) to the 150 psi (10.3 bar) that the fire department will pump into the fire department connection, regardless of the design pressure demand of the fire sprinkler system. Even if the sprinkler system will only ever experience a static pressure of, say, 60 psi (4.1 bar) at the base of the riser, fire department standard operating procedure is to pressurize the system to 150 psi (10.3 bar) through the fire department connection. Therefore, the hydrostatic pressure test has been selected to be performed at 200 psi (13.8 bar), even though the system pressure from the water supply might be very low.

The fire department connection is typically near the bottom of the sprinkler system. When the fire department is pressurizing the system at 150 psi (10.3 bar), the pipe at the top of the system is not experiencing that high pressure. (Refer to 4.3.4 of NFPA 13E, *Recommended Practice for Fire Department Operations in Properties Protected by Sprinkler and Standpipe Systems*, for information on fireground operations of sprinklered properties.) For that reason, it is not as important for the pipe to be pressure tested at 200 psi (13.8 bar) at the top of the system.

For sprinkler systems where the design pressure is over 150 psi (10.3 bar), NFPA 13 requires a test pressure that is 50 psi (3.4 bar) in excess of the design pressure of the system. The test pressure must be applied at the base of the system, not at the top. See the following exhibits.

Hydrostatic Test Equipment. (Courtesy of Wayne Automatic Fire Sprinklers, Inc.)

Hydrostatic Test Being Conducted. (Courtesy of Wayne Automatic Fire Sprinklers, Inc.)

EDUFIRE.IR

drain and auxiliary drains, typically are not subject to high pressures and do not have to be tested in accordance with this requirement to ensure integrity of the entire system.

Any buried piping connecting the fire department connection to the system can be tested in accordance with the requirements of 6.10.2.2 through 6.10.2.2.4. The trench must be backfilled prior to hydrostatic testing to prevent movement of underground piping. The backfilling can take place between joints if observation of the joints for leakage is desired and if the backfill depth is sufficient to prevent movement. The joints also can be covered, but the contractor is responsible for locating and correcting excessive leakage. The latter is usually preferred where a delay is expected in scheduling the hydrostatic test, since, from a safety standpoint, leaving trenches open for any length of time is not desirable.

All thrust blocks should be hardened before testing. The underground piping is recommended to be filled with water for a 24-hour period prior to the hydrostatic test to stabilize the system.

28.2.1.8* When systems are being hydrostatically tested, tests shall be permitted to be conducted with pendent or horizontal sidewall sprinklers or plugs installed in fittings. Any plugs shall be replaced with pendent or horizontal sidewall sprinklers after the test is completed.

Often, hydrostatic pressure testing of a sprinkler system must be completed prior to the final installation of a ceiling, soffit, or construction feature used to conceal piping to facilitate visual leak checking and to avoid potential water damage to the ceiling or construction feature should a leak occur during the test. Pendent and sidewall sprinklers with the associated escutcheons or cover plates cannot always be installed until the ceiling membrane is actually in place. Therefore, it often is necessary to plug the outlets in the fittings and conduct the testing prior to the final installation of the pendent and sidewall sprinklers. Upon successful completion of the hydrostatic pressure test and completion of the ceiling, soffit, or construction feature installation, the plugs must be removed and the sprinklers installed.

A.28.2.1.8 When a hydrostatic test is performed with plugs installed in lieu of pendent or sidewall sprinklers, a second hydrostatic test should not be required after the installation of sprinklers.

Although a hydrostatic test is not required, once the sprinklers have been installed it would be advisable to walk down the sprinkler system after it has been filled with water and exposed to normal working pressure to ensure that there are no leaks at sprinkler connections to fittings.

28.2.1.9 When deluge systems are being hydrostatically tested, plugs shall be installed in fittings and replaced with open sprinklers after the test is completed, or the operating elements of automatic sprinklers shall be removed after the test is completed.

The test requirement of 28.2.1.9 is intended to verify the integrity of deluge systems, which have open sprinklers and are exposed to ambient air under normal operating conditions. NFPA 13 and NFPA 25 require that if sprinklers have been removed, they should be discarded and replaced with new sprinklers. Paragraph 28.2.1.9 permits sprinklers having thermal operating elements to be used for hydrostatic testing if the links are subsequently removed from the sprinklers while remaining in the fitting. Otherwise, plugs used for hydrostatic testing must be removed and open sprinklers installed after successful completion of the testing.

28.2.1.10 Provision shall be made for the proper disposal of water used for flushing or testing.

In some jurisdictions, environmental regulations require water used for flushing or testing to be contained, collected, and disposed of in an acceptable manner. Paragraph 28.2.1.10 should also trigger consideration of water runoff during flushing and testing procedures. Any necessary provisions to divert, contain, or collect water should be implemented prior to initiation of flushing or testing procedures.

28.2.1.11* Test Blanks.

A.28.2.1.11 Valves isolating the section to be tested might not be "drop-tight." When such leakage is suspected, test blanks of the type required in 28.2.1.11 should be used in a manner that includes the valve in the section being tested.

A small leak around a valve seat during the test could cause a pressure drop, leading to a failed test. Test blanks can be used to eliminate that possibility.

EDUFIRE.IR

28.2.1.11.1 Test blanks shall have painted lugs protruding in such a way as to clearly indicate their presence.

A test blank without a protruding lug is virtually impossible to detect by visual inspection. Test blanks are commonly referred to as "frying pans" or "banjos" because of their characteristic shape.

28.2.1.11.2 The test blanks shall be numbered, and the installing contractor shall have a record-keeping method ensuring their removal after work is completed.

It is extremely important that all test blanks be removed after the work is completed.

28.2.1.12 When subject to hydrostatic test pressures, the clapper of a differential-type valve shall be held off its seat to prevent damaging the valve.

The design of differential dry pipe valves incorporates flexible gaskets that prevent water from entering the system. Pressures in excess of 50 psi (3.4 bar) on the system side of the valve can damage the mechanism of the valve. Exposure of valves to higher pressure after tripping is not an issue because the gasket would not be pressed between the clapper and the seat, which alleviates the concern.

28.2.2 Dry Pipe and Double Interlock Preaction System(s) Air Test.

28.2.2.1 In addition to the standard hydrostatic test, an air pressure leakage test at 40 psi (2.7 bar) shall be conducted for 24 hours. Any leakage that results in a loss of pressure in excess of 1½ psi (0.1 bar) for the 24 hours shall be corrected.

The air pressure leakage test verifies the integrity of the system, since both types of systems use pressurized air or nitrogen for system monitoring. Under non-fire conditions, dry pipe and double interlock preaction systems are subject to lower pressures than when the system is operating and is charged with water.

Because these systems are subjected to pressures from both air and water, they must be pressure-tested using both air and water. Differences in physical properties between air and water make it impossible to judge system integrity based on only one of these tests. See the commentary following 28.2.1.3 regarding the effect on temperature changes during the test.

28.2.2.2 Where systems are installed in spaces that are capable of being operated at temperatures below 32°F (0°C), air or nitrogen gas pressure leakage tests required in 28.2.2 shall be conducted at the lowest nominal temperature of the space.

Relative humidity and dew point are affected by ambient temperature. Paragraph 28.2.2.2 establishes that the lowest nominal temperature is to be used for this test.

N **28.2.2.3** Pipe or tube specifically investigated for suitability in dry pipe and double interlock preaction system(s) and listed for this service, shall be permitted to be tested in accordance with their listing limitations.

Paragraph 28.2.2.3 acknowledges that chlorinated polyvinyl chloride (CPVC) can be used in dry pipe and preaction sprinkler systems. However, air pressure typically is limited to 15 psi (1 bar), which is part of the listing limitations. Requirements for air pressure testing at 40 psi (2.7 bar) would exceed this listing limitation. To alleviate concerns of dry fit joints, it is advisable to perform the hydrostatic pressure test prior to conducting the air pressure tests on these systems.

28.2.3 System Operational Tests.

28.2.3.1 Waterflow Devices. Waterflow detecting devices including the associated alarm circuits shall be flow tested through the inspector's test connection and shall result in an audible alarm on the premises within 5 minutes after such flow begins and until such flow stops.

An audible alarm is required on the premises when the alarm test connection is operated. The alarm is to sound within 5 minutes after flow begins and must continue to sound until the flow stops. The 5-minute requirement in NFPA 13 was prompted by conditions created when a sprinkler system incorporates a strong water supply, as well as a backflow device, an alarm valve, or a check valve.

EDUFIRE.IR

Pressure differentials in water supplies can cause surges through the system. In strong water supplies, these surges can force water into the sprinkler system. Air pockets, which can be trapped in the system, become compressed and provide space for the added water. The presence of a backflow device or check valve does not allow the water to flow back out of the system.

Over a period of such occurrences, the system's static pressure continues to increase. As a result, when the alarm test connection valve is opened, there can be enough pressure in the system to allow flow out of the test connection for a period of time, without requiring water from the water supply. If the built-up pressure in the system is large enough, the alarm device cannot operate until the system pressure is reduced sufficiently to initiate flow from the source of supply.

N **28.2.3.1.1** Where a fire alarm system is monitoring waterflow, an alarm signal shall activate in accordance with the requirements of the adopted fire alarm code.

This section relates to the initiation of an alarm signal versus the previous requirement for having an audible alarm on premises within 5 minutes. When a sprinkler system is monitored by a fire alarm system, additional requirements are imposed for transmission of the alarm signal resulting from a waterflow condition. Subsection 17.13.2 of *NFPA 72, National Fire Alarm and Signaling Code*, states, "Activation of the initiating device shall occur within 90 seconds of waterflow at the alarm-initiating device when flow occurs that is equal to or greater than that from a single sprinkler of the smallest orifice size installed in the system." The 90-second requirement applies to transmission of an alarm signal after sustained water flow has started. The audible alarm signal does not need to initiate in 90 seconds, but the alarm must be received by the fire alarm system unit or fire alarm panel to initiate an alarm. The audible alarm on the premises would be associated with the output functions of the fire alarm system, along with signaling a supervising station, if applicable.

28.2.3.2* Dry Pipe Systems.

A.28.2.3.2 When the acceptance test is being performed during freezing conditions, a partial flow trip test should be conducted at that time and the full flow trip test specified should be conducted as soon as conditions permit.

The partial trip test confirms the operation of the dry pipe valve, and the air test partially confirms the integrity of the sprinkler system piping. Paragraphs 28.2.3.2.1 through 28.2.3.2.4 acknowledge that construction continues throughout all seasons of the year, and sometimes waiting until the temperature is above freezing could affect construction schedules, issuance of a certificate of occupancy, and payment. The full trip is not eliminated but, rather, can be done as soon as the conditions will allow or when the temperature is above freezing and will be sustained long enough to allow for the test to be conducted and for proper drainage.

28.2.3.2.1 A working test of the dry pipe valve shall be made by opening the inspector's test connection.

The working test of the dry pipe valve is a trip test to confirm that the valve trim is installed properly, air is evacuated from the system, and the dry pipe valve opens allowing water flow. The test time begins after the inspector's test connection valve is in the fully opened position. The test allows for confirmation of valve trip pressure and trip time, operation of quick opening devices if included, receipt of low air and alarm signals, and measurement of water delivery time to the inspector's test connection. It is important to drain the system and restore it to normal operating condition after the test.

28.2.3.2.2 Where a quick opening device is present, the trip test described in 28.2.3.2.1 shall be sufficient to test the quick opening device as long as the device trips properly during the test.

A single trip test can be conducted with the quick opening device installed and operational. The trip test will confirm operation of the quick opening device as part of the performance of the entire system. A separate test to individually observe the operation of the quick opening device is not necessary.

28.2.3.2.3* The test shall measure the time to trip the valve and the time for water to be discharged from the inspector's test connection. All times shall be measured from the time the inspector's test connection is completely opened.

EDUFIRE.IR

Full operational tests of dry pipe valves are required in accordance with 28.2.3.2.1 through 28.2.3.2.3. The contractor's material and test certificate in Figure 28.1 includes provisions for recording the following information:

1. Time it takes for the valve to trip after the system test valve is opened
2. Air and water pressures before the test
3. Air pressure at trip point
4. Delivery time for water to reach the test outlet
5. Indication of whether the alarms operated properly

The dry pipe valve should operate in accordance with the tolerance specified by the manufacturer for the trip point of the dry pipe valve.

FAQ [A.28.2.3.2.3]

What is meant by "first evidence of waterflow"?

The measurement of the time for water to be discharged from the inspector's test connection is based on the first evidence of waterflow, because it would be subject to interpretation if a wait was required to determine when a steady flow rate was achieved. During testing, the water discharging from the inspector's test connection initially will be erratic, with spurting and momentary stoppages, due to mixing with air that is still in the system.

A.28.2.3.2.3 The test criteria are based on the first evidence of waterflow to the inspector's test. Air can be mixed with the water for several minutes until the air is completely flushed from the system.

28.2.3.2.3.1* Dry systems calculated for water delivery in accordance with 8.2.3.6 shall be exempt from any specific delivery time requirement.

The trip test described in 28.2.3.2.1 must be performed to confirm proper operation of the system. However, the water delivery time measurement required by 28.2.3.2.3 does not need to validate a calculated water delivery time if determined in accordance with 8.2.3.6.

A.28.2.3.2.3.1 Although the time criteria for calculated systems is not required to be verified, a test is still required to document the initial water delivery for comparison to future inspection test requirements. If the time of a single sprinkler test outlet exceeds 70 seconds, evaluation of the calculations and the system installation might be necessary.

Systems designed in accordance with 8.2.3.2 must have initial water delivery from the trip test connection in not more than 60 seconds. Similarly, systems designed in accordance with 8.2.3.7 must discharge from a test manifold within the appropriate time limit prescribed in Table 8.2.3.6.1. However, because the calculations for water delivery times in accordance with 8.2.3.6 are theoretical and are usually based on multiple sprinkler activations, 28.2.3.2.3.1 clarifies that systems designed in accordance with 8.2.3.6 are not subject to any specific water delivery times from the trip test connection, which represents only one sprinkler operating.

Even though systems based on calculated water delivery times with multiple sprinkler operations do not require physical verification of the calculated results, a test from a trip test connection, which represents a single sprinkler operating, is still necessary as an aid to future inspection, testing, and maintenance activities so that the future findings can be compared with the original results.

28.2.3.2.4 The results shall be recorded using the contractor's material and test certificate for aboveground piping *(see Figure 28.1)* and the general information sign *(see Figure A.28.6)*.

The test certificate for aboveground piping provides significant information but is not inclusive of all system acceptance requirements. Paragraph 28.2.3.2.4 identifies that results need to be documented in the certificate as well as in the general information sign shown in Figure A.28.6.

28.2.3.3 Deluge and Preaction Systems.

28.2.3.3.1 The automatic operation of a deluge or preaction valve shall be tested in accordance with the manufacturer's instructions.

The Technical Committee on Sprinkler System Installation Criteria recognizes that there are differences in the procedures for testing of deluge and preaction systems based on the equipment selected and specific project design and installation details. Equipment manufacturers provide detailed instructions for conducting tests based on permissible configurations specific to the individual equipment. The operational procedures are different based on the valve trim, interlocking and configuration of and type of detection devices used, and cross zoning. Rather than attempt to capture the breadth of different configurations, requirements are deferred to manufacturers' instructions, which are evaluated by test laboratories as part of the equipment listings.

EDUFIRE.IR

28.2.3.3.2 The manual and remote control operation, where present, shall also be tested.

Testing of the manual releasing and remote-control features are necessary to confirm that equipment has been properly installed and configured for operation.

28.2.3.4 Main Drain Valves.

28.2.3.4.1 The main drain valve shall be opened and remain open until the system pressure stabilizes.

The drain valve should be opened — and remain opened — until transient pressure changes have been minimized (i.e., the system pressure has stabilized). Without allowing the system to stabilize, there is no certainty that measured values reflect the actual conditions.

28.2.3.4.2* The static and residual pressures shall be recorded on the contractor's material and test certificate *(see Figure 28.1)* and the sprinkler system general information placard *(see Figure A.28.6)*.

The main drain test is an important part of the acceptance for a sprinkler system because it establishes baseline data regarding the water supply against which future tests can be compared. By recording available static and residual pressures during the test, a baseline can be established and used for tracking the relative condition of the water supply during the life of the system. Decreases in the static pressure, residual pressure, or both could indicate a deteriorating water supply, an obstructed supply pipe, or a partially closed valve.

Chapter 5 and Chapter 13 of NFPA 25 require periodic tests of the main drain valve.

A.28.2.3.4.2 Measuring the flow during a main drain test is not required.

The purpose of the main drain test is to ensure that valves are opened and there are no blockages in the system piping. The main drain test is not used to validate that the system demand is achieved. However, flow is sometimes either measured or estimated to ensure proper sizing of drains or water collection dikes.

FAQ [A.28.2.3.4.2]

How is the flow from a main drain determined during the main drain test?

The results of the main drain tests are used to track the relative condition of the water supply and to determine if the waterflow to the system has a major obstruction, but it is not used as a measure of the actual capability of the water supply. Even though water is discharged during the test, the main drain test is not considered to be a waterflow test, and the actual flow rate is not measured.

28.2.3.5 Operating Test for Control Valves. All control valves shall be fully closed and opened under system water pressure to ensure proper operation.

Testing of valves for full operation under normal system working pressure is necessary to confirm that the valve components will move freely from the fully opened to fully closed positions. It is also important to ensure that the valve gate, paddle, or other components are moving when the valve handle is turned.

28.2.4 Pressure-Reducing Valves.

28.2.4.1 Each pressure-reducing valve shall be tested upon completion of installation to ensure proper operation under full flow and no-flow conditions.

Pressure-reducing valves are used to allow components with lower operating pressure limitations to be used with system pressures exceeding those limitations. The valves must be able to control pressure under normal static conditions to ensure that an incremental pressure increase will not pass through the valve, exposing the system to high pressure that could exceed the maximum working pressure. It is also important to verify that the pressure-reducing valve will operate during full flow conditions.

28.2.4.2 Testing shall verify that the device properly regulates outlet pressure at both maximum and normal inlet pressure conditions.

Pressure-reducing valves are essential for ensuring the integrity of system components. Testing must ensure that changes in inlet pressure do not allow outlet pressure to exceed the maximum set pressure for the system.

28.2.4.3 The results of the flow test of each pressure-reducing valve shall be recorded on the contractor's material and test certificate *(see Figure 28.1)*.

The test results for static and residual inlet pressures, static and residual outlet pressures, and flow rate are required to be documented as part of the contractor's material and test certificate.

EDUFIRE.IR

28.2.4.4 The results shall include the static and residual inlet pressures, static and residual outlet pressures, and the flow rate.

If pressure-reducing valves, such as the one shown in Exhibit 28.2, are installed to control excessive pressures — for example, greater than 175 psi (12.1 bar) for most systems — they must be flow-tested to ensure that they are correctly set. Pressure-reducing valves can also be required for combined sprinkler/standpipe systems. The flow-testing requirements for pressure-reducing valves originated not from a potential functional failure of the device but to ensure that the installer properly followed the installation instructions. Following the manufacturer's instructions is very important when determining the appropriate pressure and flow values for these types of devices. An improperly set pressure-reducing device can have catastrophic results.

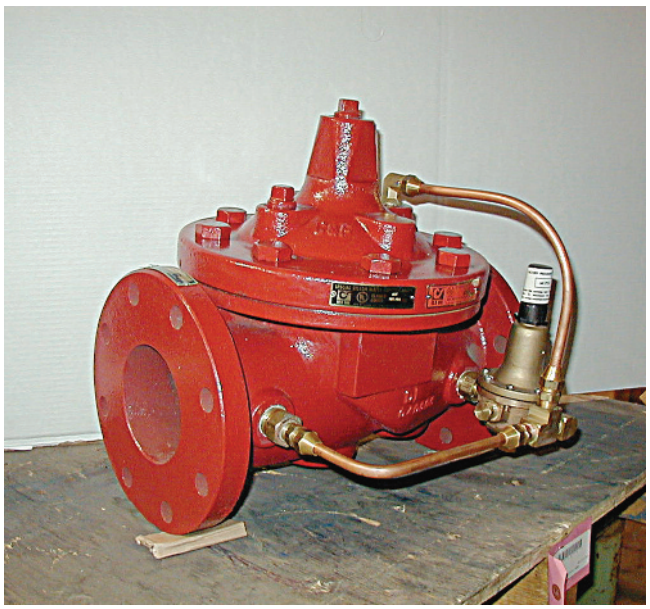

EXHIBIT 28.2 Pressure-Reducing Valve. (Courtesy of CLA-VAL Canada)

28.2.5 Backflow Prevention Assemblies.

28.2.5.1 The backflow prevention assembly shall be forward flow tested to ensure proper operation.

The forward flow test is required to verify that the backflow prevention assembly is installed correctly, the check valves are operational, and the minimum flow rate can be met.

28.2.5.2 The minimum flow rate shall be the system demand, including hose stream allowance where applicable.

Additional information on the testing of backflow devices is provided in 16.14.5. Due to their effect on sprinkler systems, backflow prevention devices must be accounted for through hydraulic analysis and flow testing.

28.2.6 Exposure Systems. Operating tests shall be made of exposure protection systems upon completion of the installation, where such tests do not risk water damage to the building on which they are installed or to adjacent buildings.

Acceptance tests for exposure protection systems should reveal that all surfaces to be protected from radiant and convective heat are uniformly wetted and that the most remote sprinkler has an adequate

EDUFIRE.IR

discharge pressure. The designer must consider the potential effects of wind and other drafts, so that these elements do not substantially affect the sprinkler's intended discharge and spray pattern and do not prevent the proper wetting of the surfaces to be protected.

N 28.3 Automated Inspection and Testing Devices and Equipment.

N **28.3.1** Automated inspection and testing devices and equipment installed on the sprinkler system shall be tested to ensure the desired result of the automated inspection or test is realized.

Automated inspection and testing devices and equipment have entered the marketplace. These devices include flow switches and drain valves that can be operated or monitored from a remote location. These types of devices are useful in areas where worker safety or exposure is of concern, in remotely located properties with difficult access, or in locations where access might be otherwise impossible or impractical.

N **28.3.1.1** Automated inspection devices and equipment shall be shown to be as effective as a visual examination.

The automated devices must be capable of identifying abnormal conditions that otherwise would be observed through visual examination. For example, a camera or group of cameras that allow for confirmation of a valve status or of gauge readings might be considered as effective as a visual in-person examination.

N **28.3.1.2** Automated testing devices and equipment shall produce the same action required by this standard to test a device.

Operation of an automated flow switch test device that causes water movement, operation of the paddle/vane, and contact closure might be considered as producing the same action as a standard test device.

N **28.3.1.2.1** The testing shall discharge water where required by this standard and NFPA 25.

Automated drain valves with observation cameras could be used to perform the function in 28.3.1.2.1. Cameras positioned to observe the operation of the valve and discharge point of the drain connection would allow for verification that water is properly being drained or collected. Another example of meeting this requirement are recirculated loops, which have been used effectively for many years to test fire pumps.

N **28.3.2** Failure of automated inspection and testing devices and equipment shall not impair the operation of the system unless indicated by an audible and visual trouble signal in accordance with *NFPA 72*.

The automated inspection and testing devices should not interfere with the operation of the sprinkler system. For example, failure of an automated flow switch test device should not affect the operation of the flow switch in detecting water movement resulting from an open sprinkler.

N **28.3.3** Failure of a system or component to pass automated inspection and testing devices and equipment shall result in an audible and visual trouble signal in accordance with *NFPA 72*.

Failure of the test device to signal the fire alarm system would be cause for audible and visible supervisory signals, indicating that maintenance is required.

N **28.3.4** Failure of automated inspection and testing devices and equipment shall result in an audible and visual trouble signal in accordance with *NFPA 72*.

Failure of the device or feature would be required to initiate audible and visible supervisory signals, indicating that maintenance is required.

EDUFIRE.IR

28.4 Instructions.

The installing contractor shall provide the property owner or the property owner's authorized representative with the following:

(1) All literature and instructions provided by the manufacturer describing proper operation and maintenance of any equipment and devices installed
(2)* NFPA 25

Complying with the requirements of Section 28.4 is important to ensure that the system is operable during its entire life expectancy. Many systems installed more than 50 years ago are still in service, are being properly maintained, and continue to protect lives and property. Therefore, it is imperative that the owner refer to all literature and instructions from the manufacturer describing proper operation and maintenance and to NFPA 25 to ensure that the system(s) is properly inspected, tested, and maintained.

A.28.4(2) A copy of NFPA 25 is not required for system alterations or additions.

A copy of NFPA 25 is required only for new installations.

28.5* Hydraulic Design Information Sign (Hydraulic Data Nameplate).

A.28.5 See Figure A.28.5.

28.5.1 The installing contractor shall identify a hydraulically designed sprinkler system with a permanently marked weatherproof metal or rigid plastic sign secured with corrosion-resistant wire, chain, or other approved means.

As-built drawings often become lost or misplaced over time. By keeping a permanent record of the design parameters attached to the system riser, as required by 28.5.1, it is much easier and less costly to perform future modifications or work on the system. The information contained on such a nameplate is of vital importance in assessing the ability of the system to control fires as the building's occupancy changes or the water supply's strength deteriorates. Exhibit 28.3 illustrates a typical hydraulic nameplate.

28.5.2 Such signs shall be placed at the alarm valve, dry pipe valve, preaction valve, or deluge valve supplying the corresponding hydraulically designed area.

The hydraulic nameplate is required to be located near its system valve. Where valve manifolds are used, it is critical to provide numbering or labeling to allow hydraulic nameplates to correlate to individual systems if the nameplates are not securely mounted on the system risers or valves.

N **28.5.3** The sign shall include the following information:

(1) Location of the design area or areas
(2) Size (area) of or number of sprinklers in the design area
(3) Discharge densities over the design area or areas
(4) Required flow and residual pressure demand at the base of the riser or fire pump where applicable
(5) Occupancy classification or commodity classification and maximum permitted storage height and configuration
(6) Hose stream allowance included in addition to the sprinkler demand
(7) Name of the installing contractor

EDUFIRE.IR

This system as shown on . . . . . company

print no . . . . . dated . . . . . .

for . . . . . .

at . . . . . contract no . . . . . .

is designed to discharge at a rate of . . . . . gpm/ft^2

(L/min/m^2) of floor area over a maximum area of . . . . . .

ft^2 (m^2) when supplied with water at a rate of . . . . . .

gpm (L/min) at . . . . . psi (bar) at the base of the riser.

Hose stream allowance of . . . . . gpm (L/min)

is included in the above.

Occupancy classification . . . . . .

Commodity classification . . . . . .

Maximum storage height . . . . . .

FIGURE A.28.5 *Sample Hydraulic Design Information Sign.*

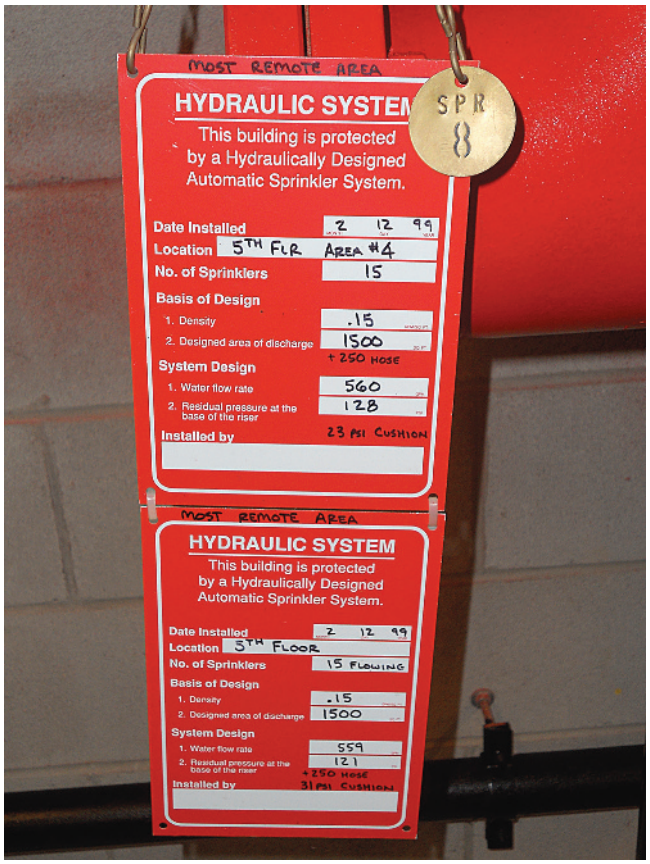

EXHIBIT 28.3 *Hydraulic Nameplate.*

The information provided on the hydraulic nameplate allows for confirmation of the system demand and key design parameters at the time of installation. Changes of occupancy or commodity could alter the hydraulic demand. NFPA 25 and the applicable fire code will provide procedures for evaluations based on changes in use, occupancy, or commodities stored. The hydraulic nameplate provides a concise summary of the hydraulic demand at the time of system acceptance.

28.6* General Information Sign.

A.28.6 While the information on this sign is useful during an inspection, such use should not be considered a hazard assessment based on the requirements of this standard. *(See Figure A.28.6.)*

The information provided on the general information sign summarizes many of the design parameters used to establish the sprinkler system basis of design at the time of installation. NFPA 25 and the fire code will identify information to be evaluated as part of a hazard assessment.

28.6.1 The installing contractor shall provide a general information sign used to determine system design basis and information relevant to the inspection, testing, and maintenance requirements required by NFPA 25.

EDUFIRE.IR

SPRINKLER SYSTEM — GENERAL INFORMATION
for

_____

_____

_____

Pipe schedule system ❑ Yes ❑ No
High-piled storage ❑ Yes ❑ No
Rack storage: ❑ Yes ❑ No
Commodity class: _____
Max. storage height _____ ft m
Aisle width (min.) _____ ft m
Encapsulation ❑ Yes ❑ No
Solid shelving: ❑ Yes ❑ No
Flammable/ combustible liquids: ❑ Yes ❑ No
Other storage: ❑ Yes ❑ No
_____
Hazardous materials: ❑ Yes ❑ No
Idle pallets: ❑ Yes ❑ No
Antifreeze systems ❑ Yes ❑ No
Location: _____
Dry or aux systems ❑ Yes ❑ No
Location: _____

Date: _____
Flow test data:
Static: _____ psi bar
Resid: _____ psi bar
Flow: _____ gpm lpm
Pitot: _____ psi bar
Date: _____
Location: _____
_____
Location of aux/low point drains:
_____
_____
_____
Dry pipe/double interlock preaction valve test results
_____
Original main drain test results:
Static: _____ psi bar
Residual: _____ psi bar
Venting valve location: _____

Where injection systems are used to treat MIC or corrosion:
Type of chemical: _____ Concentration: _____ For proper disposal, see:
_____

Name of contractor or designer: _____
Address: _____
Phone: _____

FIGURE A.28.6 *Sprinkler System General Information.*

While the information required by 28.6.1 is also required to be included on the shop drawings, building plans often become unavailable over time. By installing a sign at the system riser that specifies the details on which the original design was based, the original main drain test results, and the locations of auxiliary systems and/or drain connections, the information remains available for future inspection, testing, and maintenance of the system. It also provides important information to the building owner and occupants, inspectors, designers, and insurers who review system criteria for changes in occupancy, storage array, or water supply. See Figure A.28.6 for an example of this type of sign.

28.6.1.1 Such general information shall be provided with a permanently marked weatherproof metal or rigid plastic sign, secured with corrosion-resistant wire, chain, or other acceptable means.

EDUFIRE.IR

28.6.1.2 Such signs shall be placed at each system control riser, antifreeze loop, and auxiliary system control valve.

The general information sign is required to be located near its system control valve. Where valve manifolds are used, it is critical to provide numbering or labeling to allow the signs to be correlated to individual systems because the information signs summarize the basis of designs for each system.

28.6.2 The sign shall include the following information:

(1) Name and location of the facility protected
(2) Occupancy classification
(3) Commodity classification
(4) Presence of high-piled and/or rack storage
(5) Maximum height of storage planned
(6) Aisle width planned
(7) Encapsulation of pallet loads
(8) Presence of solid shelving
(9) Flow test data
(10) Presence of flammable/combustible liquids
(11) Presence of hazardous materials
(12) Presence of other special storage
(13) Location of venting valve
(14) Location of auxiliary drains and low point drains on dry pipe and preaction systems
(15) Original results of main drain flow test
(16) Original results of dry pipe and double interlock preaction valve test
(17) Name of installing contractor or designer
(18) Indication of presence and location of antifreeze or other auxiliary systems
(19) Where injection systems are installed to treat MIC or corrosion, the type of chemical, concentration of the chemical, and where information can be found as to the proper disposal of the chemical

Prior to the 2010 edition, the list in 28.6.2 did not include item (2), which is a requirement to identify the occupancy classification. The list only required identification of the commodity classification of storage type occupancies. Without a notation of the occupancy classification, all check boxes for a nonstorage facility, such as a library or a mercantile outlet, would be marked as "No," and there would be no useful information on the general information sign on which the basis of design could be determined.

28.6.3 Combination hydraulic design information and general information are permitted.

A single sign is permitted for use to establish the basis of design for a sprinkler system along with the hydraulic demand. Consolidating the signs reduces the required space for signage at valves or in valve rooms.

28.6.4 The sign shall include the following information:

(1) Location of the design area or areas
(2) Size (area) of or number of sprinklers in the design area
(3) Discharge densities over the design area or areas
(4) Required flow and residual pressure demand at the base of the riser
(5) Occupancy classification or commodity classification and maximum permitted storage height and configuration
(6) Hose stream allowance included in addition to the sprinkler demand
(7) Name of the installing contractor

EDUFIRE.IR

References Cited in Commentary

National Fire Protection Association, 1 Batterymarch Park, Quincy, MA 02169-7471.

NFPA 13E, *Recommended Practice for Fire Department Operations in Properties Protected by Sprinkler and Standpipe Systems*, 2015 edition.

NFPA 25, *Standard for the Inspection, Testing, and Maintenance of Water-Based Fire Protection Systems,* 2017 edition.

NFPA 72®, National Fire Alarm and Signaling Code®, 2019 edition.

EDUFIRE.IR

CHAPTER

29

Existing System Modifications

REORGANIZATION NOTE

Chapter 29 is new for the 2019 edition of NFPA 13. All the rules that apply to system modifications are now located in this chapter. Previously, system modification language was scattered throughout the document.

29.1 General.

N **29.1.1** In addition to the applicable requirements of this standard, the requirements of Chapter 29 shall apply where modifications or additions are made to existing systems.

Requirements applying to existing systems have been consolidated in this chapter. In some cases, requirements have been amended for existing systems, such as adding or relocating sprinklers as part of tenant improvements or replacing a valve.

N **29.1.2** Where additions or modifications are made to an existing system, enough of the existing system shall be indicated on the plans to make all conditions clear.

Modifications to an existing system can be extensive or limited, based on the scope of work for a project. Surveying and documenting the entire sprinkler system to show complete as-built conditions is not necessary. However, all information necessary to provide clarification of the changes being made must be shown.

N **29.1.3** When backflow prevention devices are to be retroactively installed on existing systems, a thorough hydraulic analysis, including revised hydraulic calculations, new fire flow data, and all necessary modifications to accommodate the additional friction loss, shall be completed as a part of the installation.

The retrofit installation of a backflow prevention device affects the hydraulic demand for the sprinkler system. In situations where a hydraulic nameplate is provided and accurate as-built drawings are provided, comparison of the revised system demand to the current water supply condition based on new flow test data could be simple and straightforward. Other situations where information must be recreated to perform the evaluation can be time consuming, costly, and impactful to building occupants. A complete recreation of the sprinkler system's as-built drawings is not necessary. However, sufficient information regarding the system layout in the hydraulically most demanding area of the system, as well as all sprinkler mains, fittings, valves, and appurtenances in the flow path, must be documented and included in the hydraulic calculations to demonstrate that the installation of the backflow prevention device will not result in a system demand that is or might be in excess of the available water supply.

N **29.1.4** A hydraulically calculated system for a building, or a hydraulically calculated addition to a system in an existing sprinklered building using the pipe schedule method, shall supersede

EDUFIRE.IR

the requirements in this standard governing pipe schedules, except that all systems shall continue to be limited by area.

The requirements applying to existing pipe schedule systems remain applicable. The number of sprinklers, size of pipes, and area of the system must be within the requirements for pipe schedule systems. However, when hydraulic calculations are applied to a system or addition to pipe schedule system, the rules are superseded by the sizing and limitations imposed by the hydraulic design. For example, if a system modification uses extended coverage sprinklers or sprinklers with a K-factor greater than 5.6, the rules applying to pipe schedule systems would no longer be applicable.

N **29.1.5** Unless permitted by 29.1.5.1, when modifying existing systems protecting general storage, rack storage, rubber tire storage, roll paper storage, and baled cotton storage, using sprinklers with K-factors K-8.0 (115) or less, the requirements of 21.1.3 and 21.1.4 shall not apply.

Subsection 21.1.3 requires K-8.0 (115) and larger sprinklers listed for storage applications to be used for systems having required densities of 0.2 gpm/ft^2 (8.2 mm/min) to 0.34 gpm/ft^2 (13.9 mm/min). Subsection 21.1.4 requires K-11.2 (160) and larger sprinklers listed for storage applications to be used for systems having required densities greater than 0.34 gpm/ft^2 (13.9 mm/min). However, 29.1.5 is acknowledging that these requirements do not apply to existing systems protecting high piled storage if those systems are based on control mode density/area (CMDA) designs using sprinklers with a K-factor of K-8.0 (115) or less.

N **29.1.5.1** Where applying the requirements of Table 21.5.1.1 utilizing the design criteria of 0.6 gpm/ft^2 per 2000 ft^2 (25.5 mm/min over 185 m^2) to existing storage applications, standard-response spray sprinklers with a K-factor of K-11.2 (160) or larger that are listed for storage applications shall be used.

The requirements of Table 21.5.1.1 apply to single-, double- and multiple-row rack storage of Group A plastics up to and including 25 ft. (7.6 m) in height. Existing systems designed based on CMDA requirements must use K-11.2 (160) or larger sprinklers listed for storage applications as required by Table 21.5.1.1.

N **29.1.6** For modifications or additions to existing systems equipped with residential sprinklers, the listed discharge criteria less than 0.1 gpm/ft^2 (4.1 mm/min) shall be permitted to be used.

Many listed residential sprinklers pre-date the 0.1 gpm/ft^2 (4.1 mm/min) density requirement. Existing systems having residential sprinklers listed to provide a density less than 0.1 gpm/ft^2 (4.1 mm/min) are permitted when additions or modifications are done.

29.1.7 Torch cutting and welding shall not be permitted as a means of modifying or repairing sprinkler systems.

Torch cutting and welding are restricted to new installations and only under those conditions specified by 7.5.2.2. The restrictions reduce the possible introduction of ignition sources when the sprinkler system is impaired.

29.1.8 Additives to existing systems intended for control of microbiological or other corrosion shall be listed for use within fire sprinkler systems.

Corrosion can be found years after a system installation has been accepted. Where microbiologically influenced corrosion (MIC) or some other form of corrosion is found, the use of a biocide or corrosion-inhibiting additive in an existing system is permitted only if the additive is listed for use within fire sprinkler systems. The use of these chemicals should always be done in compliance with environmental and health regulations.

EDUFIRE.IR

N 29.2 Components.

N **29.2.1** The use of reconditioned valves and devices as replacement equipment in existing systems shall be permitted.

In some cases, building owners choose to have valves and devices removed and reconditioned rather than replaced. On campuses and in very large buildings, existing equipment removed as part of renovation or demolition work are often salvaged and reused as replacement components.

29.2.2 Where all or part of an inactive sprinkler system is abandoned in place, components including sprinklers, hose valves and hoses, and alarm devices shall be removed.

Inactive equipment could give a false sense of security due to its appearance of providing protection. Requirements for removal of inoperable fire protection equipment are included in most fire codes. In general, equipment having the appearance of serving a fire protection or suppression-related function need to be removed or, if it is approved to remain in place, permanently marked as inactive.

29.2.3 Control valves abandoned in place shall have the operating mechanisms removed.

Valve closure is the leading cause of sprinkler system performance failure during fires. Removal of unnecessary valves is preferred but not always practical or cost effective. Valves abandoned in place are required to have the operating mechanism removed to avoid inadvertent operation preventing water flow when needed or causing undesired water flow.

29.2.4 Sprinkler system piping and/or valves abandoned in place shall be uniquely identified to differentiate them from active system piping and valves.

The language of 29.2.2 through 29.2.4 closely parallels the text found in Section 4.6 of NFPA *101*®. This material is included in NFPA 13 because many jurisdictions allow existing systems or components that are not obvious or visible to the public to be abandoned in place. This requirement provides guidance for systems that might end up abandoned when changes are made to the built environment.

DESIGNER'S CORNER [29.2.2]

After a change in use, the decision was made to abandon the sprinkler system in a building in place and install all new pipe for a new sprinkler system. Should all the old pipe, sprinklers, valves, and connections be ripped out?

Not all the equipment is required to be removed. However, enough equipment should be removed so that people understand that the piping and valves they see are not active. NFPA 13 requires the following equipment to be completely removed:

- Sprinklers
- Hose valves
- Hoses
- Alarm devices

In this case, the question is about removing one sprinkler system because another one is being installed. Removal of the sprinklers and hoses is important so that people do not try to use equipment that will not work and do not undertake dangerous activities because they assume they are protected. The concern is that people will see two sets of sprinklers in a space, think they are doubly protected, and potentially engage in more hazardous activities than the single system is designed for.

Other portions of the sprinkler system, including piping, valves, drains, and fire department connections, are allowed to stay in the building but should be marked, painted, or otherwise flagged to indicate that they are no longer in service. If a control valve is left in place, the operating mechanism must be removed so that in the event of a waterflow incident, the valve is not mistakenly closed by someone who assumes it is the correct valve.

Fire department connections should be removed or boxed in so they cannot be seen from the street. The fire department, not realizing that the connection is no longer feeding the system, might try to pump into the connection during a fire. To save time during an emergency and to avoid confusion regarding which fire department connection might be active, any inactive connections should be removed or covered.

In the case of a building permitted to exist without a sprinkler system, it might be possible to take the sprinkler system out of service. But the same rules should be followed: all sprinklers, alarms, hoses, and hose valves should be removed to avoid a false sense of security.

EDUFIRE.IR

N 29.3 Sprinklers.

FAQ [29.3.1]

Where can existing installed sprinklers be utilized?

Where sprinklers have been installed in a building on a temporary basis — for example, prior to finishing ceiling work — such sprinklers can be moved to the new location after the ceiling if finished. This assumes that when the sprinkler is taken down, no torque is applied to the sprinkler itself. The sprinkler must be taken down with a fitting attached to it so that the torque is applied to the fitting.

N **29.3.1** Reconditioned sprinklers shall not be permitted on any existing system.

Fusible links, frame arms, and deflectors have been known to be damaged during attempts at reconditioning sprinklers, and even the slightest damage can be detrimental to the successful operation of the sprinkler. As a result, only new sprinklers are permitted to be installed on any new or existing system.

N **29.3.2** When a sprinkler is removed from a fitting or welded outlet, it shall not be reinstalled except as permitted by 29.3.2.1.

Because of concerns that sprinklers could be damaged during the removal process, the requirement in 29.3.2 was added to the 2013 edition to clarify that when a sprinkler is removed it is to be replaced with a new sprinkler. It was further clarified in the 2016 edition that the restriction applies only to directly unscrewing the sprinkler from the fitting. The sprinkler can be reused in a drop or riser nipple only if the pipe is unscrewed from the fitting and then is relocated. When a sprinkler is removed, damage could occur to the water seal and operating element, specifically a glass bulb–type element, which could affect sprinkler performance without any visual indication.

N **29.3.2.1** Dry sprinklers shall be permitted to be reinstalled when removed in accordance with the manufacturer's installation and maintenance instructions.

Some manufacturers permit the removal of a dry sprinkler through use of a wrench applied to the dry barrel. Instructions for the removal and reinstallation of the sprinkler are provided in the product data sheet for the dry sprinkler. However, it should not be assumed that the sprinkler can be reused. An applied load to the sprinkler frame would be similar to the overtorquing condition identified in 29.3.2. If the manufacturer's instructions indicate that the dry sprinkler is to be removed by applying a wrench to the wrench flat on a sprinkler frame, or if the instructions explicitly state that the sprinkler is not to be reused, then a replacement sprinkler should be installed.

N **29.3.3** Where modifications or additions are made to existing light hazard systems equipped with standard response sprinklers, new standard response sprinklers shall be permitted to be used.

Although new system installations in light hazard occupancies require quick-response sprinklers, the use of standard-response sprinklers has provided effective performance for many years. Subsection 29.3.3 clarifies that existing systems having standard-response sprinklers in existing light hazard systems can continue to use standard-response sprinklers. There is no retroactive requirement to replace those sprinklers with quick-response sprinklers. Furthermore, modifications or renovation of existing light hazard systems using standard-response sprinklers would not require replacement of standard-response sprinklers since the systems did not take hydraulic advantage for use of quick-response sprinklers.

N **29.3.4** Where individual standard response sprinklers are replaced in existing light hazard systems, new standard response sprinklers shall be permitted to be used.

As indicated in 29.3.5, thermal sensitivity of sprinklers must be considered. Section 29.3.4 permits the installation of new standard-response sprinklers in light hazard systems. There is no intended retroactive requirement that would require the replacement of all existing standard-response sprinklers with quick-response sprinklers. Individual sprinklers are permitted to be replaced with new standard-response sprinklers.

N **29.3.5** Where existing light hazard systems are converted to use quick-response or residential sprinklers, all sprinklers in a compartment shall be changed.

Thermal sensitivity is an important sprinkler performance consideration. The intermingling of standard-response and quick-response sprinklers in the same compartment could result in sprinklers remote from the fire operating prior to sprinklers located directly over the fire. Paragraph 9.4.3.2 requires that where

EDUFIRE.IR

quick-response sprinklers are installed, all sprinklers within the same compartment must be quick response unless otherwise permitted by 9.4.3.3, 9.4.3.4, or 9.4.3.5.

N **29.3.6** When replacing residential sprinklers manufactured prior to 2003 that are no longer available from the manufacturer and that are installed using a design density less than 0.05 gpm/ft^2 (2.04 mm/min), a residential sprinkler with an equivalent K-factor (±5 percent) shall be permitted to be used, provided the currently listed coverage area for the replacement sprinkler is not exceeded.

The language in 29.3.6 was added to the 2016 edition of NFPA 13 to allow for installation of residential sprinklers having approximately the same K-factor to be used, as long as the listed sprinkler coverage area is not exceeded for the replacement sprinkler. Changes in required application density for residential sprinklers led to the inability to find replacement sprinklers for use when sprinklers are removed as part of sprinkler testing, maintenance, or renovations in compliance with NFPA 25, *Standard for the Inspection, Testing, and Maintenance of Water-Based Fire Protection Systems*.

N **29.3.7** Where cover plates on concealed sprinklers have been painted by other than the sprinkler manufacturer, the cover plates shall be replaced.

Inappropriately applied paint can affect sprinkler operational performance. Paint can delay response of the cover plate or can prevent the cover plate from deploying.

29.4 Revamping of Pipe Schedule Systems.

N **29.4.1** The pipe schedule method shall be permitted as follows:

(1) Additions or modifications to existing pipe schedule systems sized according to the pipe schedules of Section 27.5
(2) Additions or modifications to existing extra hazard pipe schedule systems

Existing pipe schedule systems are permitted to be reused as long as a change in occupancy does not exceed the occupancy hazard in which the system was designed. For example, a new ordinary hazard occupancy cannot be in an area having an existing light hazard system. Additions or modifications to existing systems must be in conformance with the pipe schedule tables provided in Section 27.5. New extra hazard pipe schedule systems, as referenced in 27.5.4, are not permitted. However, modifications or additions to existing pipe schedule systems are permitted. The pipe sizing for an extra hazard system must conform with Table A.27.5.4.

N **29.4.2** When pipe schedule systems are revamped to accommodate added ceilings, sprinkler outlets utilized for new armover or drop nipples shall have hexagonal bushings removed when present.

When a system is to be temporarily installed in an exposed manner and a finished ceiling will eventually be added, the outlets for sprinklers on the pipes are to be 1 in. (25 mm) and reduced to the thread size of the sprinklers. A common example of the need to install temporary sprinklers is in an office building with some unfinished floors that are not yet occupied. The initial installation can involve upright sprinklers. If these sprinklers are installed in 1 in. (25 mm) outlets using bushings, the bushings must be removed, and the proper fitting will be available for the final sprinkler installation when the finished ceiling is installed and the office space is finished. Paragraph 16.3.12.2 clarifies that, where it is not known that a suspended ceiling will be eventually installed when the space is finished, it is acceptable to install the new sprinklers with 1 in. (25 mm) outlets to allow for future expansion or revision.

29.4.3 When pipe schedule systems are revamped, a nipple not exceeding 4 in. (100 mm) in length shall be permitted to be installed in the branch line fitting.

EDUFIRE.IR

It is permitted to use a ½ in. (15 mm) nipple up to 4 in. (100 mm) in length to allow for relocation of a sprinkler from an existing branch line outlet. The hydraulic impact of the short pipe nipples does not outweigh the practical and monetary impact of replacing all branch line fittings. This is especially true when an existing warehouse, or a portion of it, is converted to offices. The ½ in. (15 mm) outlets are permitted to supply return bends or arm overs to drops for pendent sprinklers.

29.4.4 All piping other than the nipple permitted in 29.4.3 and 29.4.5 shall be a minimum of 1 in. (25 mm) in diameter in accordance with Figure 29.4.4.

Subsection 29.4.4 clarifies that 29.4.3 is the only application of ½ in. (15 mm) pipe that is permitted. However, the reference applies to both copper and steel pipe schedule systems. Older versions of the pipe schedules include ¾ in. (20 mm) pipe, which would no longer be permitted for use based on 29.4.4.

FAQ [29.4.5]

Why are pipe nipples less than 1 in. (25 mm) prohibited in areas subject to earthquakes?

Piping with diameters less than 1 in. (25 mm) is likely to fail during an earthquake, especially when supplying sprinklers below a ceiling. To prevent the failures, a minimum 1 in. (25 mm) fitting and pipe are required.

N **29.4.5** When it is necessary to pipe two new ceiling sprinklers from an existing outlet in an overhead system, the use of a nipple not exceeding 4 in. (100 mm) in length and of the same pipe thread size as the existing outlet shall be permitted in accordance with Figure 29.4.5, provided that a hydraulic calculation verifies that the design flow rate will be achieved.

Changing the existing line fitting is not required when existing pipe schedule systems are being revamped. A sprinkler retained in the concealed space and a sprinkler below the ceiling are in separate areas, so both can be supplied by a single connection. (See Figure 29.4.4.)

The provisions of 29.4.5 are critical when an existing pipe schedule system is being modified. Without this requirement, the in-place line tee would have to be removed and replaced with a 1 in. (25 mm) tee, then reassembled. The requirement permits an existing tee with a ½ in. (15 mm) or ¾ in. (20 mm) outlet to remain in place to supply sprinklers below a newly installed ceiling. This arrangement must be verified with hydraulic calculations when two sprinklers are to be installed beneath the ceiling from the existing line tee.

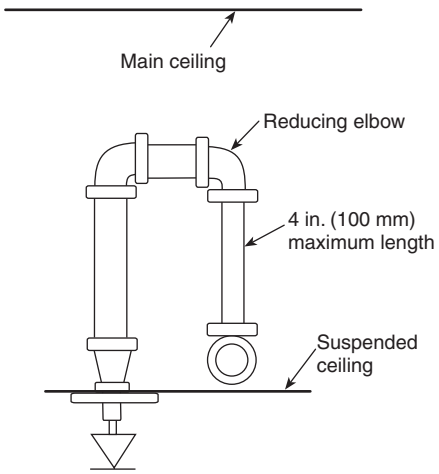

FIGURE 29.4.4 *Nipple and Reducing Elbow Supplying Sprinkler Below Ceiling.*

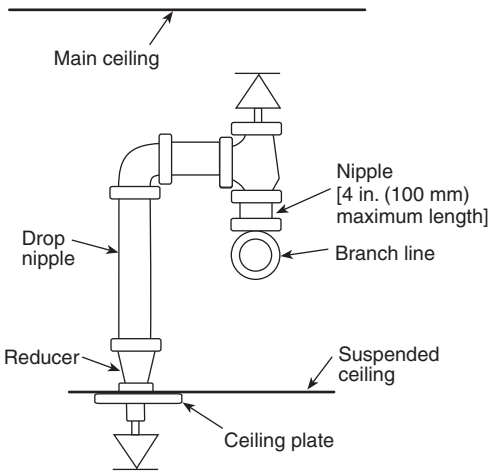

FIGURE 29.4.5 *Sprinklers in Concealed Space and Below Ceiling.*

29.4.6 Where an armover is attached to connect to a sprinkler, the use of pipe nipples less than 1 in. (25 mm) in diameter shall not be permitted where seismic design is required on the system.

Due to stresses imposed during seismic events, the use of ½ in. (15 mm) nipples in accordance with 29.4.3 is not permitted.

EDUFIRE.IR

29.5 Revamping of Hydraulic Design Systems.

29.5.1 When hydraulically designed systems are revamped, any existing bushing shall be removed and a nipple not exceeding 4 in. (100 mm) in length shall be permitted to be installed in the branch line fitting.

The use of bushings has been limited to conditions where fittings of appropriate diameter are not available or where systems were installed as part of a shell arrangement with future tenant improvements anticipated. In cases where 1 in. (25 mm) x ½ in. (15 mm) fittings or 1 in (25 mm) x ¾ in. (20 mm) fittings are used to supply upright sprinklers, the bushings are to be removed and replaced with short pipe nipples and appropriately sized fittings.

29.5.2 Calculations shall be provided to verify that the system design flow rate will be achieved.

Hydraulic calculations are needed to verify that the additional equivalent pipe length incurred by adding the pipe nipple and fitting do not result in a demand that exceeds the water supply.

29.5.3 When it is necessary to pipe two new ceiling sprinklers from an existing outlet in an overhead system, any bushings shall be removed and the use of a nipple not exceeding 4 in. (100 mm) in length and of the same pipe thread size as the existing outlet shall be permitted, provided that a hydraulic calculation verifies that the design flow rate will be achieved.

Supplying more than two sprinklers from a single branch line outlet is not permitted. A limit of two sprinklers are permitted to be supplied from a single branch line outlet if hydraulic calculations verify that the additional equivalent pipe length incurred by adding the pipe nipple and fitting do not result in a demand that exceeds the water supply for the flow rate of both sprinklers.

29.5.4 Where an armover is attached to connect to a sprinkler, the use of pipe nipples less than 1 in. (25 mm) in diameter shall not be permitted where seismic design is required on the system.

Due to stresses imposed during seismic events, the use of ½ in. (15 mm) nipples in accordance with 29.4.3 are not permitted as part of armovers.

N 29.6 System Design.

N **29.6.1** Where an addition or modifications are made to an existing system, enough of the existing system shall be indicated on the plans to make all conditions clear.

Refer to the commentary following 29.1.2.

N **29.6.2** The pipe schedule method shall be permitted as follows:

(1) For modifications or additions to existing systems equipped with residential sprinklers, the listed discharge criteria less than 0.1 gpm/ft^2 (4.1 mm/min) shall be permitted to be used.
(2) A hydraulically calculated system for a building, or a hydraulically calculated addition to a system in an existing sprinklered building using the pipe schedule method, shall supersede the rules in this standard governing pipe schedules, except that all systems shall continue to be limited by area.
(3) Unless permitted by 29.6.3, when modifying existing systems protecting general storage, rack storage, rubber tire storage, roll paper storage, and baled cotton storage, using sprinklers with K-factors K-8.0 (115) or less, the requirements of 29.6.2 and 29.6.3 shall not apply.

EDUFIRE.IR

Subsection 29.6.2 provides specific conditions outside the general rules for pipe schedule systems. Item (1) of 29.6.2 addresses situations where a pipe schedule system can be used to support residential sprinklers, which have different performance requirements than standard spray sprinklers. The allowance is considered to have little to no hydraulic impact. Item (2) of 29.6.2 is consistent with other references to hydraulically calculated areas in pipe schedule systems, such as referenced in 29.1.4. Item (3) of 29.6.2 provides consistency with other requirements for existing general storage conditions.

N **29.6.3** Where applying the requirements of Figure 25.9.3.1(a) and Figure 25.9.3.1(e) utilizing the design criteria of 0.6 gpm/ft^2 per 2000 ft^2 (25.5 mm/min over 185 m^2) to existing storage applications, standard-response spray sprinklers with a K-factor of K-11.2 (161) or larger that are listed for storage applications shall be used.

The requirements of Figure 25.9.3.1(a) and Figure 25.9.3.1(e) apply to rack storage of Group A plastics up to and including 25 ft (7.6 m) in height. Existing systems designed using K-11.2 (160) or larger sprinklers listed for storage applications shall be used as permitted in the arrangements identified in those figures.

N **29.6.4** For modifications or additions to existing systems equipped with residential sprinklers, the listed discharge criteria less than 0.1 gpm/ft^2 (4.1 mm/min) shall be permitted to be used.

Refer to the commentary following 29.1.6.

29.6.5 Retroactive Installation. When backflow prevention devices are to be retroactively installed on existing systems, a thorough hydraulic analysis, including revised hydraulic calculations, new fire flow data, and all necessary system modifications to accommodate the additional friction loss, shall be completed as a part of the installation.

A hydraulic analysis is required by 29.6.5 to determine and properly account for the impact of a retroactively installed backflow prevention device on the performance of an existing sprinkler system. Existing pipe schedule systems are not required to be recalculated in accordance with the hydraulic calculation methods of Chapter 19 where a backflow prevention device is retroactively installed. However, pipe schedule systems are required to meet certain pressure and flow requirements in accordance with Chapter 19. As in the case of a hydraulically calculated sprinkler system, it must be verified that the water supply still meets the demand of the pipe schedule system after the installation of a backflow prevention device. A backflow prevention device is shown in Exhibit 29.1.

The notion that NFPA 13 — or any other NFPA fire protection system standard — requires installation of a backflow prevention device is a myth. Because the installation of a backflow prevention device on the system introduces a failure point and can drastically reduce available water supply pressures, backflow prevention devices are not desired nor are they required from a fire protection viewpoint. Backflow prevention devices are typically required by the water authority due to health concerns, not by NFPA 13 or the fire authority. Where they are installed, however, backflow prevention devices must be listed specifically for use on a fire protection system in compliance with 7.1.1.2.

ASK THE AHJ

Can the authority having jurisdiction accept a proposal to reverse the check valve in the fire department connection as a means of flow testing the backflow prevention device?

No. This practice is acceptable only for existing systems that were installed in compliance with editions of NFPA 13 that did not require a means to flow test the backflow prevention device.

Reversing the check valve orientation is unacceptable for new systems because it is unlikely that property owners will undertake such effort and expense to conduct this important test. For systems with a smaller system demand, flow testing of the backflow prevention device typically can be accomplished through the main drain. For systems having larger system demands, a test header might need to be installed. It is important that a test header not be installed in a manner or a location in which the test connection will be confused for a standpipe or wall hydrant connection.

EDUFIRE.IR

EXHIBIT 29.1 Backflow Prevention Device.

N **29.6.6** A hydraulically calculated system for a building, or a hydraulically calculated addition to a system in an existing sprinklered building using the pipe schedule method, shall supersede the rules in this standard governing pipe schedules, except that all systems shall continue to be limited by area.

The requirements pertaining to existing pipe schedule systems remain applicable. The number of sprinklers, size of pipes, and area of the system must be within the requirements for pipe schedule systems. However, where hydraulic calculations are applied to a system or an addition to a pipe schedule system, those rules are superseded by the sizing and limitations imposed by the hydraulic design. For example, if a system modification uses extended coverage sprinklers or sprinklers with a K-factor greater than 5.6, the rules applying to pipe schedule systems would no longer be applicable.

N **29.6.7** Unless permitted by 29.6.3, when modifying existing systems protecting general storage, rack storage, rubber tire storage, roll paper storage, and baled cotton storage, using sprinklers with K-factors K-8.0 (115) or less, the requirements of 21.1.3 and 21.1.4 shall not apply.

Subsection 21.1.3 requires K-8.0 (115) and larger sprinklers listed for storage applications to be used for systems having required densities of 0.2 gpm/ft^2 (8.2 mm/min) to 0.34 gpm/ft^2 (13.9 mm/min). Subsection 21.1.4 requires K-11.2 (160) and larger sprinklers listed for storage applications to be used for systems having required densities greater than 0.34 gpm/ft^2 (13.9 mm/min). However, 29.6.7 is acknowledging that those requirements do not apply to existing systems protecting general storage, rack storage, rubber tire storage, roll paper storage, and baled cotton storage if based on CMDA designs using sprinklers with a K-factor of 8.0 (115) or less.

N 29.7 Testing.

29.7.1 Modifications to existing piping systems shall require testing at system working pressure

The requirement in 29.7.1 was added to the 2016 edition to account for small modifications, such as the addition of a single sprinkler (or few sprinklers) to an existing system that cannot be isolated in a practical and cost-effective manner. Where isolation is possible, testing should be conducted according to 29.7.1.1.

29.7.1.1 Where modification is made to an existing system affecting more than 20 sprinklers, the new portion shall be isolated and tested at not less than 200 psi (14 bar) for 2 hours.

29.7.1.2 Modifications that cannot be isolated, such as relocated drops, shall require testing at system working pressure.

EDUFIRE.IR

All new systems are required to be tested hydrostatically at a pressure of at least 200 psi (14 bar) (see 28.2.1.1), to ensure that pipe joints can withstand that pressure without coming apart or leaking. Although the hydrostatic test is primarily a workmanship test and not a materials performance test, damaged materials — for example, cracked fittings or leaky valves — are routinely discovered during the hydrostatic test. All materials used must be rated for a minimum working pressure of 175 psi (12 bar), which is the maximum pressure at which most systems are normally maintained.

The requirements of 29.7.1, 29.7.1.1, and 29.7.1.2 address additions and modifications and specify when new piping installations are to be isolated and tested. In many cases, segregating new work from existing work is difficult. To require the entire system to undergo another hydrostatic test when only relatively minor changes have been made is unreasonable and not required by NFPA 13.

Where system modifications are made and the piping cannot be isolated, such as relocated drops, NFPA 13 provides some flexibility and permits hydrostatic tests to be conducted at the system's normal static pressure. In general, existing portions of the system do not need to be subjected to a new hydrostatic test.

29.7.2 Modifications to existing dry pipe or double interlock preaction systems shall be tested for air leakage using one of the following test methods:

(1) An air pressure test at 40 psi (2.7 bar) shall be performed for 2 hours as follows:
   (a) The system shall be permitted to lose up to 3 psi (0.2 bar) during the duration of the test.
   (b) Air leaks shall be addressed if the system loses more than 3 psi (0.2 bar) during this test.

(2) With the system at normal system air pressure, the air source shall be shut off for 4 hours. If the low pressure alarm goes off within this period, the leaks shall be addressed.

Dry pipe and preaction sprinkler systems are required to be tested for air and water leakage as part of the initial installation acceptance testing. Testing of existing systems permits a loss of 3 psi (0.2 bar). However, a loss of only 1½ psi (0.1 bar) is permitted as part of testing of new dry pipe and double interlock preaction systems. See the commentary following 28.2.2.1 for additional information.

References Cited in Commentary

National Fire Protection Association, 1 Batterymarch Park, Quincy, MA 02169-7471.

NFPA 25, *Standard for the Inspection, Testing, and Maintenance of Water-Based Fire Protection Systems,* 2017 edition.

NFPA 101®, *Life Safety Code®*, 2018 edition.

EDUFIRE.IR

CHAPTER

30

Marine Systems

REORGANIZATION NOTE

Chapter 30 of the 2019 edition contains the requirements from Chapter 26 of the 2016 edition.

Chapter 30 covers specifics for marine (shipboard) applications of automatic sprinkler systems. The requirements of Chapter 26 include general requirements; system components, hardware, and use; system-specific requirements; installation requirements; design approaches; plans and calculations; water supplies; system acceptance; and system instructions and maintenance. The additional requirements of Chapter 30 are intended to be applied to marine applications only. Where a sprinkler system on a floating structure takes its water supply from the water on which the structure floats, as opposed to from a permanent water main, the sprinkler system should comply with Chapter 30.

30.1 General.

30.1.1 Chapter 30 outlines the deletions, modifications, and additions that shall be required for marine application. The applicability of Chapter 30 shall be determined by the authority having jurisdiction.

30.1.2 All other requirements of this standard shall apply to merchant vessel systems except as modified by this chapter.

The chapter on marine systems first appeared in the 1996 edition of NFPA 13. Prior to the 1990s, relatively few automatic sprinkler systems were installed on commercial ships in the United States. Because sprinkler installations on ships were relatively rare, the sprinkler system design and installation requirements contained in the Code of Federal Regulations applicable to ships had not kept pace with modern technology.

Changes in the demographics of the passenger vessel fleet in the United States — from ships with overnight accommodations that resembled hotel-type occupancies to vessels with no overnight accommodations that served as assembly occupancies — prompted changes in vessel construction and fire protection requirements. These changes favored sprinkler system installations.

ASK THE AHJ

How does the authority having jurisdiction determine applicability of the requirements in Chapter 30?

Marine systems are found on more than just cruise ships and commercial vessels. Marine systems can also be found on floating restaurants and floating casinos that might be permanently moored at a specific site on the water. Fire sprinkler systems covered in this chapter are, for the most part, the same as for land-based systems. Some of the significant differences include instances where the water supply might be coming from the body of water on which the vessel is located rather than a fire service main; differences in the type of fire department connection used in the marine industry with that used in land-based systems; requirements for spare sprinklers, because it might be harder to obtain sprinklers to put the system back in service following an activation while the vessel is under way; and special requirements for water supply due to the corrosive nature of sea water.

EDUFIRE.IR

CLOSER LOOK [30.1]

Sprinklers on Passenger Vessels

Internationally, a number of fire casualties led the International Maritime Organization (IMO) to require installation of sprinkler systems on all new passenger vessels and the retrofitting of sprinkler systems on existing ships. Similarly, NFPA 301, *Code for Safety to Life from Fire on Merchant Vessels,* which was first published in 1998, requires installation of sprinkler systems on most passenger vessels.

The following photos show the aftermath of the fire on the cruise ship *Ecstasy*. More than 2500 people were aboard in 1998 when a fire began in the laundry room. Fire boats and onboard fire fighters were needed to extinguish the fire.

Rather than revise its sprinkler system regulations, the U.S. Coast Guard, which is the authority having jurisdiction for commercial ships in the United States, looks to NFPA 13 for shipboard sprinkler system design and installation requirements. Although the fire hazards and the purpose of a sprinkler system on marine vessels closely resemble those of shoreside structures, certain modifications to the requirements in NFPA 13 are necessary for marine applications. (See 30.1.1 and 30.1.2.)

As an initial step, the U.S. Coast Guard informally adopted the 1991 edition of NFPA 13 and published a set of changes to the standard that were necessary to make NFPA 13 applicable to shipboard installations. Those changes were published in Navigation and Vessel Inspection Circular (NVIC) 10-93, "Guide to the Acceptance of National Fire Protection Association Code No. 13 for Automatic Sprinkler System Design, Installation and Maintenance."

The Technical Committee on Automatic Sprinklers subsequently reviewed NVIC 10-93 and included the necessary changes in the 1996 edition of NFPA 13. The U.S. Coast Guard subsequently replaced its sprinkler regulations and NVIC 10-93 by referencing the 1996 edition of NFPA 13 in the Code of Federal Regulations.

The differences in sprinkler protection requirements in Chapter 30 primarily reflect unique shipboard factors, such as operating environment, unavailability of outside fire-fighting assistance, and egress philosophy. Because the passengers and crew of a passenger ship cannot simply egress to safety, the overall shipboard fire protection system demands that the sprinkler system provide a slightly higher level of protection than that of a land-based sprinkler system. Although the entire standard applies to shipboard sprinkler systems, the requirements in Chapter 30 take precedence over those found in other chapters of NFPA 13.

Cruise Ship Ecstasy After 1998 Fire.

30.1.3* Occupancy Classifications. Marine environment classifications shall be in accordance with Section 4.3.

A.30.1.3 In addition to the examples provided in A.4.3, Table A.30.1.3 provides additional examples of occupancy definitions of typical shipboard spaces.

30.1.4* Partial Installations.

A.30.1.4 Experience has shown that structures that are partially sprinklered can be overrun by well-developed fires originating in unsprinklered areas. Therefore, the entire vessel should be sprinklered whenever sprinkler systems are considered.

EDUFIRE.IR

TABLE A.30.1.3 Examples of Shipboard Space Occupancy Classification

Occupancy Type	Space Types Included: CFR[a]	Space Types Included: SOLAS[b]	Examples
Light hazard	1[c], 2, 3, 4, 5, 6, 7, 8[d], 13	1[c], 2, 3, 4, 5, 6, 7, 8, 9	Accommodation spaces Small pantries
Ordinary hazard (Group 1)	8[d], 9[d]	12, 13[d]	Galleys Storage areas Sales shops Laundries Pantries with significant storage
Ordinary hazard (Group 2)	9[d], 11[d]	12[d], 13[d]	Sales shops Storage areas Stages (with sets) Machine shops
Extra hazard (Group 1)	1, 9[d], 10, 11[d]	1, 12[d], 13[d]	Auxiliary machinery — limited-combustible liquids[e] Steering rooms — combustible hydraulic fluid in use[e]
Extra hazard (Group 2)	1, 9[d], 10, 11[d]	1, 12[d], 13[d]	Auxiliary machinery — with combustible liquids[e] Machinery spaces[e]

[a]Space-type designations are given in 46 CFR 72.05-5.

[b]Space-type designations are given in the *International Convention for the Safety of Life at Sea*, 1974 (SOLAS 74), as amended, regulations II-2/3 and II-2/26.

[c]Primarily for accommodation-type control stations, such as the wheel house, which would not include generator rooms or similar-type spaces.

[d]Depends on storage type, quantity, and height and distance below sprinkler.

[e]Automatic sprinklers typically will not be the primary means of protection in these areas; total flooding systems are usually used.

The classifications in Table A.30.1.3 are not meant to be applied without giving consideration to the definition of each occupancy hazard given in the standard. Table A.30.1.4 is general guidance for classification of typical spaces. Where a space is outfitted such that the occupancy definitions indicate that another classification would be more appropriate, the most representative and most demanding occupancy classification should be used. For example, it would certainly be possible to outfit a stateroom to require upgrading the occupancy to ordinary hazard, Group 1.

When a vessel undergoes modifications, alterations, or service changes that significantly affect the fire risk of the occupancy of one or more compartments, the occupancy classification should be reevaluated to determine if it has changed.

FAQ [30.1.3]

Do the requirements of Chapter 30 apply to floating structures, such as restaurants and casinos, which are either mobile or permanently moored?

Although originally intended only for application to ships, other types of waterborne structures were recognized as more closely resembling ships than buildings. Examples include restaurants and casinos that are built on permanently moored barges. Where a sprinkler system on a floating structure takes its water supply from the water on which the structure floats, as opposed to from a permanent water main, the sprinkler system must comply with Chapter 30.

Although limited-area systems are covered by NFPA 13, partial sprinkler systems are not acceptable for shipboard fire protection. Paragraph 30.1.4.2 recognizes that some areas of a ship, such as the engine room, are typically not protected by an automatic sprinkler system but are protected by another type of fire protection system, such as a carbon dioxide system. However, those spaces need to be separated by a 1-hour-rated assembly. Paragraph 30.1.4.3 recognizes that sprinkler coverage in certain areas of a ship might not be necessary and maintains the exception for their omission under certain conditions.

30.1.4.1 Partial installation of automatic sprinklers shall not be permitted, unless the requirements of 30.1.4.2 or 30.1.4.3 are met.

EDUFIRE.IR

30.1.4.2 Spaces shall be permitted to be protected with an alternative, approved fire suppression system where such areas are separated from the sprinklered areas with a 1-hour-rated assembly.

30.1.4.3 The requirements of 30.1.4.1 shall not apply where specific sections of this standard permit the omission of sprinklers.

30.2 System Components, Hardware, and Use.

30.2.1* Sprinklers shall have a K-factor of K-2.8 (40) or greater.

A.30.2.1 Sprinklers with a nominal K-factor of 2.8 (40) or less coupled with a system strainer minimize the potential for clogging.

Experience has shown that sprinklers with nominal K-factors smaller than 2.8 have a greater likelihood of becoming clogged by scale (see A.30.2.1). Additionally, piping that is exposed to saltwater has a tendency to develop more scale than piping that is exposed to freshwater.

30.2.2* Sprinkler piping penetrations shall be designed to preserve the fire integrity of the ceiling or bulkhead penetrated.

A.30.2.2 Where a marine thermal barrier is penetrated, limiting the opening around the sprinkler pipe to 1⁄16 in. (1 mm) is considered as meeting this requirement.

Because of the importance of passive fire protection systems, piping that penetrates walls, floors, and ceilings must not compromise the integrity of the passive fire protection system. For an A-Class (1-hour) barrier, the penetration is usually protected with an approved firestop, or the piping is welded or flanged to the vessel structure at the penetration. For vessels that are subject to the International Convention for the Safety of Life at Sea (SOLAS), all penetrations of A-Class divisions must be fire tested in accordance with the *IMO Fire Test Procedures Code*. On domestic vessels, a 1⁄16 in. (1 mm) gap is considered acceptable for penetrations of any B-Class (30-minute) division, such as a marine thermal barrier. On vessels in international service, penetrations in B-Class divisions are subject to regulation II-2/9.3.2 of SOLAS.

30.2.3 Spare Sprinklers.

30.2.3.1 The required stock of spare sprinklers shall be carried for each type of sprinkler installed onboard the vessel.

30.2.3.2 Where fewer than six sprinklers of a particular type are installed, 100 percent spares shall be kept in stock.

In the event of sprinkler system activation at sea, obtaining replacement sprinklers can be impossible for a long period of time, which is the reason for the requirement in 30.2.3.2. Additionally, because of the variety of spaces on a large ship, it would not be unusual to find a wide variety of sprinkler types installed. The requirement for spare sprinklers is increased in 30.2.3 (compared to that required for land based systems) to ensure that, if, for example, a sprinkler actuation occurs in a small compartment that is protected by sprinklers that do not match the majority found on the ship, it would be possible to replace the sprinklers at sea.

30.2.3.3 Where applicable, at least one elastometric gasket shall be kept in the cabinet for each fire department connection that is installed onboard the vessel.

The marine environment can also accelerate aging of the gaskets in fire department connections. Readily available spares are important.

30.2.3.4 The cabinet containing spare sprinklers, special wrenches, and elastometric gaskets shall be located in the same central safety station that contains the alarm annunciator panel(s) and supervisory indicators.

EDUFIRE.IR

30.2.4 System Pipe and Fittings.

30.2.4.1* When ferrous materials are used for piping between the sea chest and zone control valves, these materials shall be protected against corrosion by hot dip galvanizing or by the use of Schedule 80 piping.

A.30.2.4.1 When nonferrous materials are used, consideration should be given to protecting against galvanic corrosion where the nonferrous materials connect to steel pipe. Consideration should also be given to protection against galvanic corrosion from pipe hangers in areas of high humidity.

The piping between the sea chest and the sprinkler zone valves are likely to see the frequent flow of saltwater when testing. Sprinkler zone piping will rarely, if ever, be exposed to saltwater. In such an event, NFPA 25 requires flushing of the piping. Even if the piping is not flushed, the saltwater will not be replenished and will lose oxygen content in fairly short order.

Even if galvanized, the failure from corrosion from the interior of the pipe is likely to be at all threaded connections, welded assembly connections, and where brass sprinklers thread into ferrous pipe. Only hot dipped galvanized after fabrication of assembly (as opposed to simply hot dipped galvanized pipe and fittings) will protect against some of those failures. Hot dipped galvanized after fabrication of assembly is practical from the sea chest to the sprinkler manifold where spaces are open and pipe is relatively large and uses flanged takedown joints instead of threaded unions. Hot dipped galvanized after fabrication of assembly is not practical in the sprinkler zone pipe where it is mainly field fit.

The additional requirements in 30.2.4.1 for protecting ferrous materials reflect concerns regarding the potential for corrosion damage caused by salt water.

Galvanic corrosion can occur where piping transitions from copper to steel or where a metal different from the piping is used for hangers.

30.2.4.2 Maximum design pressure for copper and brass pipe shall not exceed 250 psi (17.2 bar).

Vessel construction regulations typically do not permit copper or brass piping to be subjected to pressures in excess of 250 psi (17.2 bar).

30.2.5 Pipe Support.

30.2.5.1* Pipe supports shall comply with the following:

(1) Pipe supports shall be designed to provide adequate lateral, longitudinal, and vertical sway bracing.
(2) The design shall account for the degree of bracing, which varies with the route and operation of the vessel.
(3) Bracing shall be designed to ensure the following:
    (a) Slamming, heaving, and rolling will not shift sprinkler piping, potentially moving sprinklers above ceilings, bulkheads, or other obstructions.
    (b) Piping and sprinklers will remain in place at a steady heel angle at least equal to the maximum required damaged survival angle.
(4) Pipe supports shall be welded to the structure.
(5) Hangers that can loosen during ship motion or vibration, such as screw-down-type hangers, shall not be permitted.
(6) Hangers that are listed for seismic use shall be permitted to be used in accordance with their listing.

A.30.2.5.1 When designing supports, the selection and spacing of pipe supports should take into account the pipe dimensions, mechanical and physical properties of piping materials and supports, operating temperature, thermal expansion effects, external loads, thrust forces,

EDUFIRE.IR

vibration, maximum accelerations, differential motions to which the system might be subjected, and the type of support.

The route of the vessel is intended to be descriptive of its usual operating area. For example, expected motion of the system on an ocean vessel is expected to be considerably greater than the motion of a vessel that operates on a river. A vessel that operates within the confines of any of the Great Lakes is expected to subject the system pipe to greater motion than would a vessel that operates on a lake such as Lake Tahoe.

It is recommended that the designer review the requirements for automatic sprinkler systems that are subject to earthquakes. While it is obvious that shipboard motions and accelerations differ from those that occur during an earthquake, the general principle of protecting the piping system against damage applies. Individual hanger design, however, will be very similar.

Earthquake protection does not apply to ships; however, motions are similar to those that a ship will experience in a seaway. The design principles discussed in this section should be used as a guide for shipboard system design.

30.2.5.2 Sprinkler piping shall be supported by the primary structural members of the vessel such as beams, girders, and stiffeners.

30.2.5.3* The components of hanger assemblies that are welded directly to the ship structure shall not be required to be listed.

A.30.2.5.3 Use of heat-sensitive materials for pipe hangers and supports might be desirable in some cases. Where heat-sensitive materials are used, the hangers and supports should be adequately protected by either the direct application of insulation or installation behind a marine thermal barrier. Insulation materials applied directly to hangers should be insulated in accordance with the method provided in Society of Naval Architects and Marine Engineers Technical Research Bulletin 2-21, "Aluminum Fire Protection Guidelines."

30.2.5.4* U-hook sizes shall be no less than that specified in Table 17.2.1.4.

A.30.2.5.4 Consideration should be given to increasing the size of rods and U-hooks as necessary, to account for service and operational loading, including ship motion and vibrations.

30.2.6 Valves.

30.2.6.1* All indicating, supply, and zone control valves shall be supervised open from a central safety station.

A.30.2.6.1 Shipboard installations will normally require more than one valve per water supply. Locking valves in the open position is not an acceptable substitute for the requirement of 30.2.6.1 but can be done in addition to the supervision requirement.

The intent of 30.2.6.1 is that supervision of all indicating, supply, and zone control valves from the central safety station will allow quick detection and correction of any system impairment.

30.2.6.2 Drain and test valves shall meet the applicable requirements of 46 CFR 56.20 and 56.60.

A requirement of 46 CFR 56.20, "Valves," is that valves have limited leakage after removal of all resilient material. The removal of resilient material simulates extended aging or exposure of a valve to a fire. The intention is to ensure that failure of a drain line does not allow large quantities of water to flow uncontrolled into the structure of a vessel.

A requirement of 46 CFR 56.60, "Materials," is that valve castings meet ASTM A47, *Standard Specification for Ferritic Malleable Iron Castings,* or ASTM A197, *Standard Specification for Cupola Malleable Iron,* for malleable iron; ASTM A126, *Standard Specification for Gray Iron Castings for Valves, Flanges, and Pipe Fittings,* for gray iron; or ASTM A395, *Standard Specification for Ferritic Ductile Iron Pressure-Retaining Castings for Use at Elevated Temperatures,* for ductile iron. In addition, the valve itself is required by 46 CFR 56.60 to meet ANSI B16.34, *Valves — Flanged, Threaded, and Welding End.*

EDUFIRE.IR

30.2.6.3 Valve markings shall include the information required by 46 CFR 56.20-5(a).

A requirement of 46 CFR 56.20-5(a), "Markings," is that the valve be marked with the manufacturer's name and the service conditions for which the valve is intended.

30.2.7 Fire Department Connections and International Shore Connections.

30.2.7.1* A fire department connection and an International Shore Connection shall be installed.

A.30.2.7.1 International Shore Connections are portable universal couplings that permit connections of shipboard sprinkler or firemain systems between one ship and another or between a shore facility and a ship. Both the ship and the shore facility are expected to have an international shore connection fitting such that in an emergency they can be attached to their respective fire hoses and bolted together to permit charging the ship's system. It must be portable to accommodate hose-to-hose connection and allow assistance from any position.

Installation of an additional fire boat connection might be required on-board vessels whose route is such that regular access to fire boats is possible. An additional fire boat connection might not be necessary where fire boats are equipped to connect to the regular fire department connection. *(See A.30.2.7.7.)*

30.2.7.2 The requirements for a fire department connection in 30.2.7.1 shall not apply to vessels that operate primarily on international voyages.

30.2.7.3 Connections shall be located near the gangway or other shore access point so that they are accessible to the land-based fire department.

30.2.7.4 Fire department and International Shore Connections shall be colored and marked so that the connections are easily located from the shore access point (i.e., gangway location) and will not be confused with a firemain connection.

30.2.7.5 An 18 in. × 18 in. (450 mm × 450 mm) sign displaying the symbol for fire department connection as shown in Table 5.2 of NFPA 170 shall be placed at the connection so that it is in plain sight from the shore access point.

30.2.7.6 Connections on both sides of the vessel shall be provided where shore access arrangements make it necessary.

30.2.7.7* Fire department connection thread type shall be compatible with fire department equipment.

A.30.2.7.7 Selection of the pipe thread for the fire department connection should be done very carefully. It is recommended that a 2½ in. (63 mm) siamese connection with National Standard Hose Thread be used since a majority of fire department hose lines will be compatible with this thread. However, it must be noted that some fire jurisdictions might not be compatible with a connection of this type. Serious consideration should be given to the vessel's typical operating area. Precautions and planning should avert the possibility of the vessel being forced ashore by fire at a location where the fire department equipment is not compatible with this connection. Carriage of extra fittings and pre-voyage arrangements with all applicable jurisdictions should be considered. The international shore connection is required to ensure that all vessels fitted with sprinkler systems have at least one type of common connection.

30.2.7.8 International shore connections shall comply with ASTM F1121, *Standard Specification for International Shore Connections for Marine Fire Applications*.

EDUFIRE.IR

30.3 System Requirements.

FAQ [30.3.1]

Why are relief valves required on all wet pipe sprinkler systems?

Large ambient temperature variations occur on ships because of changes in climate or solar heating. Relief valves are required on all wet pipe systems to protect against piping failure caused by pressure buildup. This provision extends beyond that required for gridded systems in shoreside structures, as indicated in 8.1.2.

30.3.1* Relief Valves. Relief valves shall be provided on all wet pipe systems.

A.30.3.1 Special consideration should be given to the installation of relief valves in all wet pipe systems. Ambient ship temperatures can vary greatly depending on operating environment, duration of voyage, and failure of climate control systems.

30.3.2 Spare Detection Devices. The number of spare detection devices or fusible elements used for protection systems that shall be carried per temperature rating is as follows:

(1) Vessels shall have two spare detection devices or fusible elements when operating voyages are normally less than 24 hours.
(2) Vessels shall have four spare detection devices or fusible elements when operating voyages are normally more than 24 hours.

FAQ [30.3.2]

Why are spare detection devices required?

The provisions of 8.3.1.4 are amplified in 30.3.2 by requiring additional detection devices for preaction and deluge systems for vessels with routes that routinely exceed 24 hours.

As addressed previously with regard to spare sprinklers (see commentary following 30.2.3.2), in the event of a shipboard fire at sea, replacement detection devices are critical to returning the system to service. The requirements in 30.3.2 help to ensure that the system will be able to remain in service until additional detection devices can be obtained.

30.3.3 System Piping Supervision. All preaction sprinkler systems shall be supervised regardless of the number of sprinklers supplied.

Because of the large number of small spaces on a ship and the level of reliability required of all shipboard fire protection systems, 30.3.3 requires that all preaction systems — not only those with more than 20 sprinklers — be supervised.

30.3.4 Circulating Closed Loop Systems. Circulating closed loop systems shall not be permitted.

30.4 Installation Requirements.

30.4.1 Temperature Zones. Intermediate-temperature-rated sprinklers shall be installed under a noninsulated steel deck that is exposed to sunlight.

To reduce the possibility of sprinkler operation caused by solar heating, intermediate temperature–rated sprinklers are required to be located under uninsulated steel decks, such as ceilings, that are exposed to sunlight.

FAQ [30.4.2]

Which portions of a ship can be considered dwelling units?

On ships, sleeping accommodation areas are the only spaces that should be considered and treated as dwelling units.

30.4.2* Residential Sprinklers. Residential sprinklers shall be permitted for use only in sleeping accommodation areas.

A.30.4.2 Areas fitted primarily with multiple staterooms and corridors should be considered sleeping accommodation areas.

30.4.3 Window Protection. Where required, windows shall be protected by sprinklers installed at a distance not exceeding 1 ft (300 mm) from the glazing at a spacing not exceeding 6 ft (1.8 m) such that the entire glazing surface is wetted at a linear density not less than 6 gpm/ft (75 mm/min), unless listed window sprinkler protection systems are installed in accordance with their installation and testing criteria.

Vessel construction codes require protection of windows that face areas where passengers can be expected to gather in the event of a fire. The requirement recognizes that sprinklers specifically listed for window protection are available. It is noteworthy that the required density is based on protection of ordinary, non-fire-rated glazing.

EDUFIRE.IR

30.4.4* Concealed Spaces.

A.30.4.4 If combustibles are present such that they constitute a threat, the space should be sprinklered. One example would be the presence of large bundles of unsheathed computer or electrical cable. Typical amounts of lighting or control cabling should not be considered to constitute a fire threat.

30.4.4.1 Concealed spaces that are constructed of combustible materials, or materials with combustible finishes or that contain combustible materials, shall be sprinklered.

30.4.4.2 The requirements of 30.4.4.1 shall not apply to concealed spaces that contain only nonmetallic piping that is continuously filled with water.

Paragraph 30.4.4.2 exceeds the requirements of 9.3.18. Ships, particularly passenger ships, typically have large concealed spaces, such as interstitial spaces above ceilings, which can contain large quantities of combustible piping, cabling, and so forth. The intent of this requirement is to protect against possible avenues where a fire could spread undetected.

30.4.5 Vertical Shafts.

30.4.5.1 Sprinklers shall not be required in vertical shafts used as duct, electrical, or pipe shafts that are nonaccessible, noncombustible, and enclosed in an A-Class-rated assembly.

Paragraph 30.4.5.1 states that sprinklers are not required in vertical shafts, which echoes the requirements in 9.3.3 and permits the omission of sprinklers in vertical shafts enclosed by A-Class (1-hour) assemblies. Many of the concealed spaces alluded to in 30.4.4 are enclosed by B-Class (30-minute) assemblies or non-rated assemblies.

30.4.5.2 Stairway enclosures shall be fully sprinklered.

The stairways on passenger ships typically contain more combustible materials, such as carpeting and small amounts of furniture, than their shoreside counterparts. Therefore, the requirement in 9.3.4 is expanded to require sprinklers in all levels of stairways.

30.4.6 Bath Modules. Sprinklers shall be installed in bath modules (full room modules) constructed with combustible materials, regardless of room fire load.

Modern marine construction often uses bathrooms that are prefabricated from combustible composite materials. The provision in 9.2.4.1.1 that permits the omission of sprinklers in certain bathrooms does not apply to combustible bathroom modules on ships because of concern over the potential combustible load that these materials would contribute to a fire. The quantity of combustible materials should be considered in this regard.

30.4.7 Ceiling Types. Drop-out ceilings shall not be used in conjunction with sprinklers.

Because drop-out ceilings can affect sprinkler operation, they are not permitted on ships in accordance with 30.4.7.

30.4.8 Return Bends.

30.4.8.1 To prevent sediment buildup, return bends shall be installed in all shipboard sprinkler systems where pendent-type or dry pendent-type sprinklers are used in wet systems *(see Figure 16.3.11.2)*.

30.4.8.2 Consideration shall be given concerning the intrusion of saltwater into the system.

30.4.8.3 Specifically, sprinklers shall not be rendered ineffective by corrosion related to saltwater entrapment within the return bend.

FAQ [30.4.8]

Why are return bends required on all shipboard wet pipe sprinkler systems where pendent-type sprinklers are used?

All ships use a raw water source; therefore, return bends are required. Research has indicated that sprinklers constructed using silicon brass alloy (UNS C87800) are susceptible to corrosion caused by saltwater; this susceptibility provides an additional reason for the use of return bends for shipboard applications.

EDUFIRE.IR

FAQ [30.4.9]

Why is no inside or outside hose stream allowance required for shipboard sprinkler systems?

As stated in 30.4.9, sprinkler system piping is not permitted to be used to supply hose connections.

30.4.9 Hose Connections. Sprinkler system piping shall not be used to supply hose connections or hose connections for fire department use.

Ships generally are required to have an independent fire main or standpipe system dedicated to manual fire-fighting operations. Although Section 16.15 permits hose connections to be supplied by sprinkler system piping in shoreside structures, hose connections for manual fire fighting are not permitted to be supplied by the ship's sprinkler system piping. Due to the limited stored water supply requirements in Section 30.7, the concern is that operation of a hose connection supplied by the sprinkler system piping will quickly deplete the stored water supply dedicated solely to the sprinkler system.

30.4.10 Heat-Sensitive Piping Materials.

The requirements in 30.4.10 are intended to ensure that where heat-sensitive piping materials, such as plastic pipe, are used, they will not be susceptible to failure caused by exposure to fire, even if the sprinkler system is impaired, such as by a closed valve.

30.4.10.1 Portions of the piping system constructed with a heat-sensitive material shall be subject to the following restrictions:

(1) Piping shall be of non–heat-sensitive type from the sea suction up through the penetration of the last A-Class barrier enclosing the space(s) in which the heat-sensitive piping is installed.
(2) B-Class draft stops shall be fitted not more than 45 ft (14 m) apart between the marine thermal barrier *(see definitions in Chapter 3 and 30.1.3)* and the deck or shell.
(3) Portions of a system that are constructed from heat-sensitive materials shall be installed behind a marine thermal barrier, unless the provisions of item (4) are met.
(4)* Piping materials with brazed joints shall not be required to be installed behind a marine thermal barrier, provided the following conditions are met:
   (a) The system is of the wet pipe type.
   (b) The piping is not located in spaces containing boilers, internal combustion engines, or piping containing flammable or combustible liquids or gases under pressure, cargo holds, or vehicle decks.
   (c) A relief valve in compliance with 8.1.2 is installed in each section of piping that is capable of being isolated by a valve(s).
   (d) A valve(s) isolating the section of piping from the remainder of the system is installed in accordance with 30.4.10.2 and 30.4.10.3.

The 1996 edition of NFPA 13 permitted the use of brazed copper piping only where it was installed behind a marine thermal barrier. The brazing material would have been considered heat sensitive because it melts at a temperature of less than 1700°F (926.7°C). The exception was added to the 1999 edition to permit brazing of copper tube while maintaining the fire endurance performance, as stated in 30.4.10.1.

The 1700°F (926.7°C) definition of heat-sensitive materials was derived from the endpoint temperature of a 1-hour ASTM E119, *Standard Test Methods for Fire Tests of Building Construction and Materials,* exposure. Brazing filler metals have a solidus melting temperature between 1126°F and 1310°F (607°C and 710°C), according to the Copper Development Association's *Copper Tube Handbook*. However, while dry piping could be expected to reach temperatures approaching 1700°F (926.7°C) after a 1-hour exposure, stagnant water–filled piping likely would not reach temperatures hot enough to melt brazing metals, as indicated in item (4)(a) of 30.4.10.1. Soldered joints, which are permitted for nonmarine systems under 7.5.4.3 and 7.5.4.4, are not permitted for marine systems because solders have melting temperatures ranging from 361°F to 464°F (183°C to 240°C) (*Copper Tube Handbook*). Under foreseeable circumstances, such as exposure to a fire when a valve is shut, the solder could melt.

Item (4)(b) of 30.4.10.1 recognizes that hydrocarbon fires or fires in cargo spaces or on vehicle decks easily could reach temperatures that could jeopardize the integrity of brazed joints. For example, a fuel spray fire on the *USS Conyngham* in May 1990 caused failure of a brazed joint in a fire main that was filled with stagnant water.

EDUFIRE.IR

Item (4)(c) of 30.4.10.1 is intended to allow for the expansion of boiling water in piping when there is no waterflow.

Item (4)(d) of 30.4.10.1 is intended to ensure that valves that could prevent waterflow to a protected space are accessible in the event of a fire.

A.30.4.10.1(4) Because of its melting point, brazing would be considered heat sensitive. The criterion of this paragraph is intended to permit brazed joints without requiring that they be installed behind a marine thermal barrier, while maintaining the fire resistance as stated in 30.4.10.1 under reasonably foreseeable failure modes.

30.4.10.2 Each zone in which heat-sensitive piping is installed shall be fitted with a valve capable of segregating that zone from the remainder of the system.

30.4.10.3 The valve shall be supervised and located outside of the zone controlled and within an accessible compartment having A-Class boundaries or within a Type 1 stair.

30.4.11 Discharge of Drain Lines.

30.4.11.1 Drain lines shall not be connected to housekeeping, sewage, or deck drains. Drains shall be permitted to be discharged to bilges.

30.4.11.2 Overboard discharges shall meet the requirements of 46 CFR 56.50-95 and shall be corrosion resistant in accordance with 46 CFR 56.60.

30.4.11.3 Systems that contain water additives that are not permitted to be discharged into the environment shall be specially designed to prevent such discharge.

Ships typically have two wastewater systems — gray and black. Black water includes piping from toilets, while gray water typically consists of drainage from sinks, deck drains, showers, and so forth. Gray water can often be discharged directly into the sea, but black water must be held or processed on the ship. Introduction of any pressurized water source into gray or black water piping could result in the system overflowing. Bilges are similar in function to sumps, and drainage from bilge pumps is always overboard.

30.4.11.4 Discharges shall be provided with a down-turned elbow.

The down-turned elbow serves to direct the water discharge in a downward direction and minimizes the likelihood of water spray hitting people or other objects on the deck and adjacent boats.

30.4.12 Alarm Signals and Devices.

30.4.12.1* A visual and audible alarm signal shall be given at the central safety station to indicate when the system is in operation or when a condition that would impair the satisfactory operation of the system exists.

A.30.4.12.1 While not required, a dual annunciator alarm panel system is recommended. One panel should show the piping system layout and indicate status of zone valves, tank pressures, water supply valves, pump operation, and so forth. The second panel should show the vessel's general arrangement and indicate status of waterflow (i.e., fire location) alarms.

30.4.12.2 Alarm signals shall be provided for, but not limited to, each of the following: monitoring position of control valves, fire pump power supplies and operating condition, water tank levels and temperatures, zone waterflow alarms, pressure of tanks, and air pressure on dry pipe valves.

30.4.12.3 Alarms shall give a distinct indication for each individual system component that is monitored.

30.4.12.4 An audible alarm shall be given at the central safety station within 30 seconds of waterflow.

EDUFIRE.IR

30.4.12.5 Waterflow alarms shall be installed for every zone of the sprinkler system.

30.4.12.6 Sprinkler zones shall not encompass more than two adjacent decks or encompass more than one main vertical zone.

Many passenger vessels are subdivided into areas referred to as main vertical zones. These spaces have a function similar to that of horizontal exits in buildings, allowing people to egress away from the hazard. Main vertical zones are usually about 131 ft (40 m) in length. Sprinkler zones are limited to not more than two decks in any main vertical zone.

30.4.12.7 Electrically operated alarm attachments shall comply with, meet, and be installed in accordance with the requirements of 46 CFR, Subchapter J, "Electrical Engineering."

NFPA 70®, National Electrical Code®, does not fully apply to shipboard electrical systems. The requirements for electrical systems on ships are contained in 46 CFR 110–113, Subchapter J, "Electrical Engineering."

30.4.12.8 All wiring shall be chosen and installed in accordance with IEEE 45, *Recommended Practice for Electrical Installations on Shipboard*.

30.4.13 Test Connections. Where test connections are below the bulkhead deck, they shall comply with the overboard discharge arrangements of 46 CFR 56.50-95.

The bulkhead deck is the highest deck that can be expected to be submerged when the vessel's hull is breached. Any penetration of the hull below the bulkhead deck must be protected so that it does not serve as a path for water ingress.

30.4.14 Protection of Copper Tubing. Copper tubing materials shall be protected against physical damage in areas where vehicles and stores handling equipment operate.

Copper tubing has a lower yield strength and thinner walls than steel pipe and, therefore, is more prone to damage such as pinching.

30.5 Design Approaches.

30.5.1 Design Options.

30.5.1.1 Marine sprinkler systems shall be designed using the hydraulic calculation procedure of Chapter 23.

30.5.1.2 The pipe schedule method shall not be used to determine the water demand requirements.

30.5.2* Window Protection. Minimum water demand requirements shall include sprinklers that are installed for the protection of windows as described in 30.4.3.

A.30.5.2 For example, a design area of 1500 ft^2 (140 m^2) is used to design a sprinkler system for an unobstructed light hazard occupancy. In this case, the system must supply at least seven sprinklers that are installed within that area. If eight sprinklers are installed to protect windows within this design area, the water demand of these sprinklers is added to the total water demand. Thus, 15 sprinklers must be supplied by this system.

30.5.3* Hose Stream Allowance. No allowance for hose stream use shall be required.

A.30.5.3 Hose stream flow need not be added to the water demand. The water supply for fire streams is supplied by separate fire pump(s) that supply the vessel's fire main.

EDUFIRE.IR

30.6 Plans and Calculations.

30.6.1 Additional Information. The pressure tank size, high-pressure relief setting, high- and low-water alarm settings, low-pressure alarm setting, and pump start pressure shall be provided.

30.6.2 Sprinklers specifically installed for the protection of windows under 30.4.3 shall be permitted to be of a different size from those protecting the remainder of the occupancy classification.

30.6.3 All of the window sprinklers, however, shall be of the same size.

30.6.4* Marine sprinkler systems shall be designed and installed to be fully operational without a reduction in system performance when the vessel is upright and inclined at the angles of inclination specified in 46 CFR 58.01-40.

Marine sprinkler systems must be designed to be fully operational when the vessel is upright or inclined as a result of damage.

A.30.6.4 In vessels, the elevation of sprinklers with respect to the water supply varies as the vessel heels to either side or trims by the bow or stern. The water demand requirements can be increased or decreased under these conditions. This requirement aligns the operational parameters of this safety system with that required for other machinery vital to the safety of the vessel.

A list of 22.5 degrees and a trim of 7.5 degrees is specified in 46 CFR 58.01-40, "Machinery, Angle of Inclination," which is cited in 30.6.4. Also, 46 CFR 58.01-40 contains flexibility where lesser angles can be accepted. For example, lesser angles are accepted on vessels that operate only in calm waters or do not get under way.

Verification of the requirement of performance with the specified list and trim requires hydraulic calculation of the hydraulically most remote area with the vessel in the following three conditions:

1. Upright
2. Listing to port
3. Listing to starboard

FAQ [30.7]

What is the water supply source for a sprinkler system on a marine vessel?

The water supply for a sprinkler system on a ship typically comes from two sources. The initial supply comes from a small limited water source stored on the vessel. This stored supply is sized to provide for 1 minute of system demand plus the volume of the piping if a dry pipe, preaction, or deluge system is used. During the discharge of the stored water source, a pump that takes suction from the sea activates. Because of concerns that large quantities of mud will be drawn into the fire pump suction when the vessel is close to shore or on an inland waterway, a single water supply that takes suction from the sea is not considered sufficiently reliable.

30.7 Water Supplies.

30.7.1 General. The water supply requirements for marine applications shall be in accordance with Section 30.7.

30.7.2 Pressure Tank.

A pressure tank is the preferred source of initial water supply because, during a loss of power, it will still operate. As indicated in item (1) of 30.7.2.1, the tank must be sized to provide the system demand for at least 1 minute plus the volume of any dry piping used.

30.7.2.1 Unless the requirements of 30.7.2.2 are met, a pressure tank shall be provided. The pressure tank shall be sized and constructed so that the following occurs:

(1) The tank shall contain a standing charge of freshwater equal to that specified by Table 30.7.2.1.
(2) The pressure tank shall be sized in accordance with 5.2.4.

EDUFIRE.IR

(3) A glass gauge shall be provided to indicate the correct level of water within the pressure tank.
(4) Arrangements shall be provided for maintaining an air pressure in the tank such that, while the standing charge of water is being expended, the pressure will not be less than that necessary to provide the design pressure and flow of the hydraulically most remote design area.
(5) Suitable means of replenishing the air under pressure and the freshwater standing charge in the tank shall be provided.
(6) Tank construction shall be in accordance with the applicable requirements of 46 CFR, Subchapter F, "Marine Engineering."

TABLE 30.7.2.1 *Required Water Supply*

System Type	*Additional Water Volume*
Wet pipe system	Flow requirement of the hydraulically most remote system demand for 1 minute
Preaction system Deluge system Dry pipe system	Flow requirement of the hydraulically most remote system demand for 1 minute of system demand plus the volume needed to fill all dry piping

30.7.2.2 Pressure Tank Alternative. In lieu of a pressure tank, a dedicated pump connected to a freshwater tank shall be permitted to be used, provided the following conditions are met:

(1) The pump is listed for marine use and is sized to meet the required system demand.
(2) The suction for the fire pump is located below the suction for the freshwater system so that there shall be a minimum water supply of at least 1 minute for the required system demand.
(3) Pressure switches are provided in the system and the controller for the pump that automatically start the pump within 10 seconds after detection of a pressure drop of more than 5 percent.
(4) There shall be a reduced pressure zone backflow preventer to prevent contamination of the potable water system by saltwater.
(5) This pump has at least two sources of power. Where the sources of power are electrical, these shall be a main generator and an emergency source of power. One supply shall be taken from the main switchboard, by separate feeder reserved solely for that purpose. This feeder shall be run to an automatic changeover switch situated near the sprinkler unit, and the switch shall normally be kept closed to the feeder from the emergency switchboard. The changeover switch shall be clearly labeled, and no other switch shall be permitted in these feeders.

The requirement in 30.7.2.2 permits a dedicated pump that takes suction from a freshwater tank. A single pump that takes suction from both the sea and the potable water tank is not permitted to be used because of concerns regarding contamination of the vessel's potable water tank with seawater. The suction from the pump must be located at a lower elevation from any other pumps, ensuring that the minimum required volume of water is always available. When the option permitted by item (5) of 30.7.2.2 is used, both the pump dedicated to the potable water tank and the pump that takes suction from seawater must be powered by the emergency switchboard.

30.7.2.3 Relief Valves.

30.7.2.3.1 Relief valves shall be installed on the tank to avoid overpressurization and false actuation of any dry pipe valve.

30.7.2.3.2 Relief valves shall comply with 46 CFR 54.15-10.

EDUFIRE.IR

30.7.2.4 Power Source.

30.7.2.4.1 There shall be not less than two sources of power for the compressors that supply air to the pressure tank.

30.7.2.4.2 Where the sources of power are electrical, these shall be a main generator and an emergency source of power.

30.7.2.4.3 One supply shall be taken from the main switchboard, by separate feeders reserved solely for that purpose.

30.7.2.4.4 Such feeders shall be run to a changeover switch situated near the air compressor, and the switch normally shall be kept closed to the feeder from the emergency switchboard.

30.7.2.4.5 The changeover switch shall be clearly labeled, and no other switch shall be permitted in these feeders.

30.7.2.5 Multiple Tanks.

30.7.2.5.1 More than one pressure tank can be installed, provided that each is treated as a single water source when determining valve arrangements.

Where sufficient space on the vessel is not available to install a single pressure tank meeting the requirements of 30.7.2.1, several smaller tanks can be considered, as stated in 30.7.2.5.1. Each tank must be fitted with valves to keep seawater out of the tank and water out of the air supply.

30.7.2.5.2 Check valves shall be installed to prohibit flow from tank to tank or from pump to tank, unless the tank is designed to hold only pressurized air.

The requirement in 30.7.2.5.2 permits the omission of check valves in piping between a supplemental pressurized air tank and a pressure tank containing water.

30.7.2.6 In systems subject to use with saltwater, valves shall be so arranged as to prohibit contamination of the pressure tank with saltwater.

30.7.2.7* Where applicable, a means shall be provided to restrict the amount of air that can enter the pressure tank from the air supply system. A means shall also be provided to prevent water from backflowing into the air supply system.

A.30.7.2.7 The purpose of this requirement is to ensure that the pressure tank air supply will not keep the tank "fully" pressurized while water is expelled, thus preventing pump actuation.

30.7.3 Fire Pump.

30.7.3.1 A dedicated, automatically controlled pump that is listed for marine service, which takes suction from the sea, shall be provided to supply the sprinkler system.

30.7.3.2 Where two pumps are required to ensure the reliability of the water supply, the pump that supplies the fire main shall be allowed to serve as the second fire pump.

The requirement in 30.7.3.2 for the installation of multiple fire pumps to increase system reliability typically would come from a vessel construction standard, such as NFPA 301.

30.7.3.3* The pump shall be sized to meet the water demand of the hydraulically most demanding area.

A.30.7.3.3 NFPA 20 requires that fire pumps furnish not less than 150 percent of their rated capacity at not less than 65 percent of their rated heat. The intention of the requirement of 30.7.3.3 is to limit designers to 120 percent of the rated capacity of the pump to provide an additional factor of safety for marine systems.

As a means of increasing the overall level of system reliability, pumps cannot be sized in excess of 120 percent of their rated capacity. (See 30.7.3.4.)

EDUFIRE.IR

30.7.3.4 Pumps shall be designed to not exceed 120 percent of the rated capacity of the pump.

30.7.3.5 The system shall be designed so that, before the supply falls below the design criteria, the fire pump shall be automatically started and shall supply water to the system until manually shut off.

30.7.3.6 Where pump and freshwater tank arrangement is used in lieu of the pressure tank, there must be a pressure switch that senses a system pressure drop of 25 percent, and the controller must automatically start the fire pump(s) if pressure is not restored within 20 seconds.

30.7.3.7 There shall be not less than two sources of power supply for the fire pumps. Where the sources of power are electrical, these shall be a main generator and an emergency source of power.

30.7.3.8 One supply shall be taken from the main switchboard by separate feeders reserved solely for that purpose.

30.7.3.9 Such feeders shall be run to a changeover switch situated near to the sprinkler unit, and the switch normally shall be kept closed to the feeder from the emergency switchboard.

30.7.3.10 The changeover switch shall be clearly labeled, and no other switch shall be permitted in these feeders.

30.7.3.11 Test Valves.

30.7.3.11.1 A test valve(s) shall be installed on the discharge side of the pump with a short open-ended discharge pipe.

30.7.3.11.2 The area of the pipe shall be adequate to permit the release of the required water output to supply the demand of the hydraulically most remote area.

30.7.3.12 Multiple Pumps.

30.7.3.12.1 Where two fire pumps are required to ensure the reliability of the water supply, each fire pump shall meet the requirements of 30.7.3.1 through 30.7.3.4.

30.7.3.12.2 In addition, a system that is required to have more than one pump shall be designed to accommodate the following features:

(1)* Pump controls and system sensors shall be arranged such that the secondary pump will automatically operate if the primary pump fails to operate or deliver the required water pressure and flow. *[Figure A.30.7.3.12.2(1) is an example of an acceptable dual pump arrangement.]*

A.30.7.3.12.2(1) Pumps should not be located within the same compartment. However, where this is not reasonable or practical, special attention should be given to protecting pumps such that a single failure will not render the sprinkler system inoperative. *[See Figure A.30.7.3.12.2(1).]*

(2) Both pumps shall be served from normal and emergency power sources. However, where approved by the authority having jurisdiction, the secondary pump shall be permitted to be nonelectrically driven.
(3) Pump failure or operation shall be indicated at the central safety station.

30.7.3.13* If not specifically prohibited, the fire pump that supplies the fire main shall be permitted to be used as the second pump, provided the following conditions are met:

(1) The pump is adequately sized to meet the required fire hose and sprinkler system pressure and flow demands simultaneously.
(2) The fire main system is segregated from the sprinkler system by a normally closed valve that is designed to automatically open upon failure of the designated fire pump.

EDUFIRE.IR

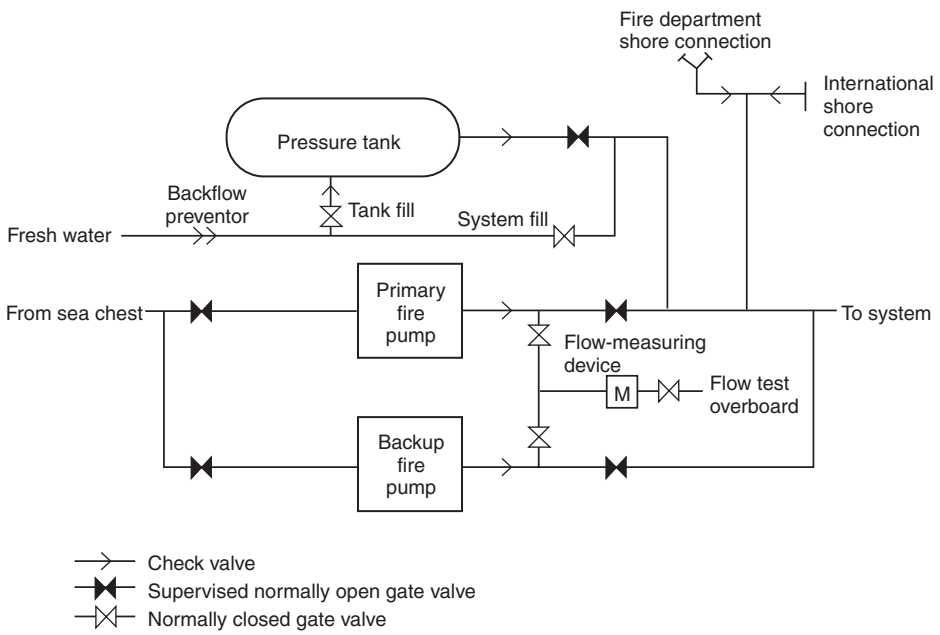

FIGURE A.30.7.3.12.2(1) *Abbreviated Example of Dual Fire Pump Water Supply.*

(3) The fire pump that supplies the fire main is automatically started in the event of dedicated fire pump failure or loss of pressure in the sprinkler main. *(See Figure A.30.7.3.13.)*

A.30.7.3.13 See Figure A.30.7.3.13.

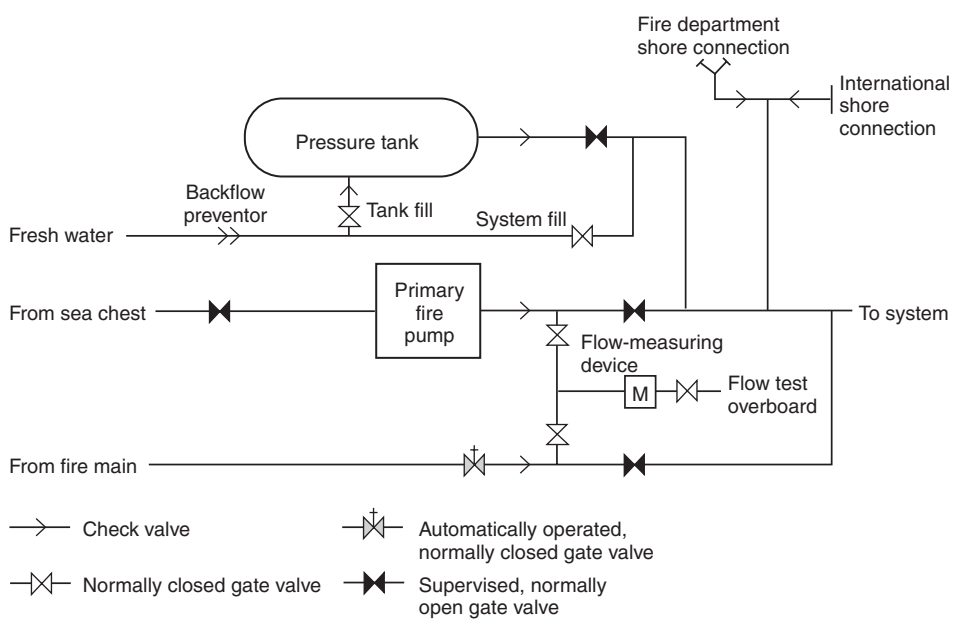

FIGURE A.30.7.3.13 *Abbreviated Example of Water Supply with Fire Pump Backup.*

EDUFIRE.IR

30.7.4 Water Supply Configurations.

FAQ [30.7.4.1]

Why are the pressure tank and the fire pump required to be remote from any Category A machinery space?

Many shipboard fires start in machinery spaces. The intent of 30.7.4.1 is to locate the fire pumps and pressure tanks so that a fire in the machinery space does not cause an impairment of the sprinkler system.

30.7.4.1 The pressure tank and fire pump shall be located in a position reasonably remote from any machinery space of Category A.

30.7.4.2 All valves within the water supply piping system shall be supervised.

30.7.4.3 Only freshwater shall be used as the initial charge within the piping network.

Limiting the initial charge of water in the piping network to freshwater is intended to minimize the potential for corrosion.

30.7.4.4 The sprinkler system shall be cross-connected with the ship's fire main system and fitted with a lockable screw-down nonreturn valve such that backflow from the sprinkler system to the fire main is prevented.

The fire main (standpipe) used for manual fire-fighting operations also has one or more pumps that take suction from the sea. The cross-connection between these two systems minimizes the effects caused by a pump failure in either the sprinkler system piping or the fire main and increases the reliability of the overall fire protection system.

30.7.4.5 The piping, tanks, and pumps that make up the water supply shall be installed in accordance with the applicable requirements of 46 CFR, Subchapter F, "Marine Engineering."

30.7.4.6* When a shorewater supply is to be used during extended dockside periods, the water supply shall be qualified in the manner described in 5.2.2.

A.30.7.4.6 This procedure should be used to qualify each water supply to which the vessel is to be attached. For example, this might require testing of multiple hydrants or connections in the same mooring area. The pressure loss effect of the hose or piping leading from the water supply to the ship should also be considered when qualifying each hydrant.

Some vessels, such as casino vessels, can operate at the dock for extended periods of time. Such vessels can use a water supply independent of the vessel, such as a connection to a shoreside water main.

30.7.4.7 Tests shall be conducted in accordance with the requirements of the local shore-based authority having jurisdiction.

30.7.4.8 The water supply information listed in Section 4.6 shall then be provided to the authority having jurisdiction.

30.8 System Acceptance.

30.8.1 Hydrostatic Tests. In addition to the interior piping, the test required by 28.2.1.7 shall also be conducted on all external water supply connections including international shore and fireboat connections.

30.8.2 Alarm Test. A waterflow test shall result in an alarm at the central safety station within 30 seconds after flow through the test connection begins.

30.8.3 Operational Tests.

30.8.3.1 Pressure tank and pump operation, valve actuation, and waterflow shall also be tested.

30.8.3.2 Pump operation and performance shall be tested in accordance with Chapter 14 of NFPA 20.

EDUFIRE.IR

30.9 System Instructions and Maintenance.

30.9.1 Instructions for operation, inspection, maintenance, and testing shall be kept on the vessel.

30.9.2 Records of inspections, tests, and maintenance required by NFPA 25 shall also be kept on the vessel.

The requirements in NFPA 25 for the inspection, testing, and maintenance of sprinkler systems are applicable for marine purposes. Chapter 30 expands on the requirements of NFPA 25, as indicated in Section 30.9.

FAQ [30.9.2]

Where are the records specified in 30.9.2 and required by NFPA 25, *Standard for the Inspection, Testing, and Maintenance of Water-Based Fire Protection Systems,* to be kept?

NFPA 25 requires flushing of piping following a system activation to limit corrosion caused by seawater ingress into the sprinkler system. Subsection 30.9.2 specifically requires that instructions for this testing as well as the inspection, testing, and maintenance records for the system be kept on the vessel.

References Cited in Commentary

National Fire Protection Association, 1 Batterymarch Park, Quincy, MA 02169-7471.
NFPA 25, *Standard for the Inspection, Testing, and Maintenance of Water-Based Fire Protection Systems,* 2017 edition.
NFPA 70®, National Electrical Code®, 2017 edition.
NFPA 301, *Code for Safety to Life from Fire on Merchant Vessels,* 2018 edition.

American National Standards Institute, Inc., 25 West 43rd Street, 4th floor, New York, NY 10036.
ANSI B16.34, *Valves — Flanged, Threaded, and Welding End,* 2017.

ASTM International, 100 Barr Harbor Drive, P.O. Box C700, West Conshohocken, PA 19428-2959.
ASTM A47, *Standard Specification for Ferritic Malleable Iron Castings,* 1999 (2014).
ASTM A126, *Standard Specification for Gray Iron Castings for Valves, Flanges, and Pipe Fittings,* 2004 (2014).
ASTM A197, *Standard Specification for Cupola Malleable Iron,* 2000 (2015).
ASTM A395, *Standard Specification for Ferritic Ductile Iron Pressure-Retaining Castings for Use at Elevated Temperatures,* 1999 (2014).
ASTM E119, *Standard Test Methods for Fire Tests of Building Construction and Materials,* 2018a.

Copper Development Association, 260 Madison Avenue, New York, NY 10016.
Copper Tube Handbook, 2006.

International Maritime Organization, 4 Albert Embankment, London SE1 7SR, United Kingdom.
IMO Fire Test Procedures Code, 2001.
SOLAS regulation II-2/9.3.2.

U.S. Government Publishing Office, 732 North Capitol Street, NW, Washington, DC 20401-0001.
Navigation and Vessel Inspection Circular 10-93, "Guide to the Acceptance of National Fire Protection Association Code No. 13 for Automatic Sprinkler System Design, Installation and Maintenance," U.S. Coast Guard, 1993.
Title 46, Code of Federal Regulations, Part 56.20, "Valves."
Title 46, Code of Federal Regulations, Part 56.20-5(a), "Markings."
Title 46, Code of Federal Regulations, Part 56.60, "Materials."
Title 46, Code of Federal Regulations, Part 58.01-40, "Machinery, Angle of Inclination."
Title 46, Code of Federal Regulations, Parts 110–113, Subchapter J, "Electrical Engineering."

EDUFIRE.IR

EDUFIRE.IR

CHAPTER

31

System Inspection, Testing, and Maintenance

REORGANIZATION NOTE

Chapter 31 of the 2019 edition was Chapter 27 in the 2016 edition of NFPA 13. This chapter serves simply as a pointer to NFPA 25, *Standard for the Inspection, Testing, and Maintenance of Water-Based Fire Protection Systems*, after the system is placed in service.

Chapter 31 specifically requires that sprinkler systems be inspected, tested, and maintained in accordance with NFPA 25. Inspection and testing activities are critical in ensuring proper system operation. Additionally, many insurance companies insist that an ongoing program be in place. NFPA 25 identifies the activities that need to be conducted and the frequency at which they need to be performed.

ASK THE AHJ

With which edition of NFPA 25 must the owner comply to maintain a fire sprinkler system?

There might be multiple editions of NFPA 25 with which an owner must comply. Simultaneously, the applicable fire code might have maintenance requirements that reference a newer edition of NFPA 25 because that standard is revised periodically and fire code requirements typically are retroactive. In addition, the owner/tenant might also need to comply with the most current edition of NFPA 25 for legal and liability concerns.

N 31.1* General.

A sprinkler system installed in accordance with this standard shall be properly inspected, tested, and maintained by the property owner or their authorized representative in accordance with NFPA 25 to provide at least the same level of performance and protection as designed.

A.31.1 *Impairments.* Before shutting off a section of the fire service system to make sprinkler system connections, notify the authority having jurisdiction, plan the work carefully, and assemble all materials to enable completion in the shortest possible time. Work started on connections should be completed without interruption, and protection should be restored as promptly as possible. During the impairment, provide emergency hose lines and extinguishers and maintain extra watch service in the areas affected.

When changes involve shutting off water from any considerable number of sprinklers for more than a few hours, temporary water supply connections should be made to sprinkler systems so that reasonable protection can be maintained. In adding to old systems or revamping them, protection should be restored each night so far as possible. The members of the private fire brigade as well as public fire departments should be notified as to conditions.

Maintenance Schedule. The items shown in Table A.31.1 should be checked on a routine basis.

EDUFIRE.IR

TABLE A.31.1 *Maintenance Schedule*

Parts	*Activity*	*Frequency*
Flushing piping	Test	5 years
Fire department connections	Inspection	Monthly
Control valves	Inspection	Weekly — sealed
	Inspection	Monthly — locked
	Inspection	Monthly — tamper switch
	Maintenance	Yearly
Main drain	Flow test	Quarterly — annual
Open sprinklers	Test	Annually
Pressure gauge	Calibration test	
Sprinklers	Test	50 years
Sprinklers — high-temperature	Test	5 years
Sprinklers — residential	Test	20 years
Waterflow alarms	Test	Quarterly
Preaction/deluge detection system	Test	Semiannually
Preaction/deluge systems	Test	Annually
Antifreeze solution	Test	Annually
Cold weather valves	Open and close valves	Fall, close; spring, open
Dry/preaction/deluge systems		
Air pressure and water pressure	Inspection	Weekly
Enclosure	Inspection	Daily — cold weather
Priming water level	Inspection	Quarterly
Low-point drains	Test	Fall
Dry pipe valves	Trip test	Annually — spring
Dry pipe valves	Full flow trip	3 years — spring
Quick-opening devices	Test	Semiannually

Inspection, testing, and maintenance issues are beyond the scope of NFPA 13, but they are critical for effective sprinkler system performance. Inspection, testing, and maintenance are especially important because of the inactive nature of a sprinkler system. Unlike other types of building systems that are used on a routine basis, the sprinkler system is used only during emergency situations. The system's proper operating condition is not verifiable through day-to-day operations, as are the heating, air-conditioning, and plumbing systems. Therefore, the building owner or representative must employ and follow an inspection, testing, and maintenance program as specified by NFPA 25, as stated in Section 31.1.

A system that does not comply with the requirements of NFPA 25 is not in compliance with NFPA 13. An improperly maintained system is likely to be impaired in some way and cannot be expected to meet its fire protection objectives. An impaired system is likely to have the same effect as no sprinkler protection at all.

It is critical that steps be taken to compensate for the lack of protection in a building when the sprinkler system is impaired. NFPA 25 provides information on dealing with system impairments. One step that can be taken regarding life safety is evacuation of the building. Provisions for emergency hose lines, extinguishers, and/or an approved fire watch are alternatives to an evacuation. See Chapter 15 of NFPA 25 for a more complete discussion of impairments and recommendations on how to handle the occupation of a building with an impaired system.

EDUFIRE.IR

Table A.31.1 provides guidance on the kinds of activities that need to be performed and some general sense as to how frequently such activities should be carried out.

SEE ALSO

NFPA 25: Water-Based Fire Protection Systems Handbook and *Fire Protection Systems: Inspection, Test & Maintenance Manual* for more information.

References Cited in Commentary

National Fire Protection Association, 1 Batterymarch Park, Quincy, MA 02169-7471.

NFPA 25, *Standard for the Inspection, Testing, and Maintenance of Water-Based Fire Protection Systems*, 2017 edition.

NFPA 25: Water-Based Fire Protection Systems Handbook, 2011 edition.

Fire Protection Systems: Inspection, Test & Maintenance Manual, 4th edition, 2012.

EDUFIRE.IR

EDUFIRE.IR

ANNEX

A

Explanatory Material

Annex A is not a part of the requirements of this NFPA document but is included for informational purposes only. This annex contains explanatory material, numbered to correspond with the applicable text paragraphs.

Annex material is useful information that is included in this document solely to help the user understand the intent of the requirements by providing further information, diagrams, examples, or other details. The Annex A material, along with the mandatory sections of NFPA 13, is voted on by the document's technical committees. Unlike the Annex A material, the commentary in this handbook consists of the opinions of the editors of and contributors to this handbook — not the committee — to help further explain provisions in the document. For the convenience of the readers of this handbook, Annex A text is inserted after the appropriate paragraphs in Chapter 1 through Chapter 31 and, therefore, is not repeated here.

EDUFIRE.IR

EDUFIRE.IR

ANNEX

B

Miscellaneous Topics

This annex is not a part of the requirements of this NFPA document but is included for informational purposes only.

B.1

Figure B.1 shows acceptable methods for interconnection of the fire protection and domestic water supply.

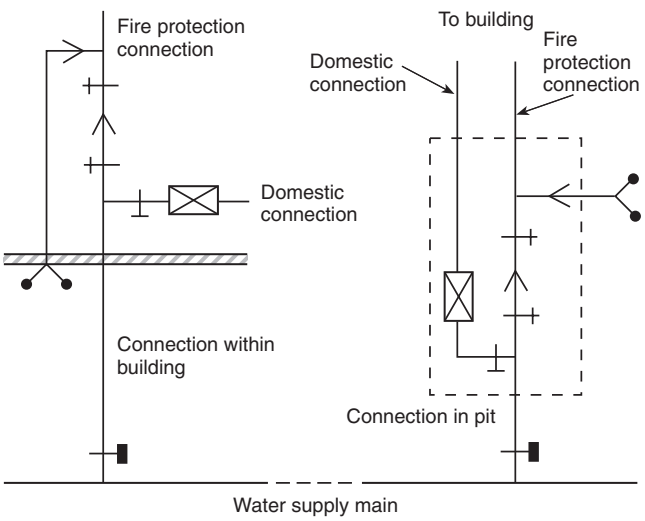

FIGURE B.1 *Permitted Arrangements Between Fire Protection Water Supply and Domestic Water Supply.*

Automatic fire sprinkler systems can be supplied from a single source or a combination of sources such as a municipal water supply, elevated gravity tanks, at-grade tanks or reservoirs, pressure tanks, rivers, lakes, and ground well water.

In theory, a single water supply would seem to be all that is necessary for satisfactory protection. To rely on a single source to supply the entire system, however, can pose problems. For example, a single supply might be temporarily out of service, it might be disabled at the time of a fire or before a fire is completely extinguished, or its pressure or capacity might be below normal during an emergency. Therefore, a secondary supply is recommended depending on the strength and reliability of the primary supply; the value and importance of the property; the area, height, and construction of the building; the use or occupancy; and the outside exposures.

EDUFIRE.IR

The following are some of the most common methods for supplying water to automatic sprinkler systems:

1. Waterworks systems
2. Fire pumps
3. Tanks
4. Fire department connections

While those are the most common methods for supplying water, other water supplies can include reservoirs and even seawater where approved by the authority having jurisdiction. It is important that the designer consider the environmental factors of the less common water supplies so that the system maintains a high level of reliability. Where natural or raw water sources are used, strainers and corrosion-resistant appurtenances might be necessary.

A connection from a reliable public waterworks system of adequate capacity and pressure is the preferred single or primary supply for automatic sprinkler systems. In determining its adequacy, the designer must consider not only the normal capacity and pressure of the system but also its reliability.

B.2 Sprinkler System Performance Criteria.

B.2.1 Sprinkler system performance criteria have been based on test data. The factors of safety are generally small, are not definitive, and can depend on expected (but not guaranteed) inherent characteristics of the sprinkler systems involved. These inherent factors of safety consist of the following:

(1) The flow-declining pressure characteristic of sprinkler systems whereby the initial operating sprinklers discharge at a higher flow than with all sprinklers operating within the designated area.
(2) The flow-declining pressure characteristic of water supplies, which is particularly steep where fire pumps are the water source. This characteristic similarly produces higher than design discharge at the initially operating sprinklers.

The user of these standards can elect an additional factor of safety if the inherent factors are not considered adequate.

B.2.1.1 Performance-specified sprinkler systems, as opposed to scheduled systems, can be designed to take advantage of multiple loops or gridded configurations. Such configurations result in minimum line losses at expanded sprinkler spacing, in contrast to the older tree-type configurations, where advantage cannot be taken of multiple path flows.

Where the water supply characteristics are relatively flat with pressures being only slightly above the required sprinkler pressure at the spacing selected, gridded systems with piping designed for minimal economic line losses can all but eliminate the inherent flow-declining pressure characteristic generally assumed to exist in sprinkler systems. In contrast, the economic design of a tree-type system would likely favor a system design with closer sprinkler spacing and greater line losses, demonstrating the inherent flow-declining pressure characteristic of the piping system.

Elements that enter into the design of sprinkler systems include the following:

(1) Selection of density and area of application
(2) Geometry of the area of application (remote area)
(3) Permitted pressure range at sprinklers
(4) Determination of the water supply available
(5) Ability to predict expected performance from calculated performance
(6) Future upgrading of system performance
(7) Size of sprinkler systems

EDUFIRE.IR

In developing sprinkler specifications, each of these elements needs to be considered individually. The most conservative design should be based on the application of the most stringent conditions for each of the elements.

B.2.1.2 Selection of Density and Area of Application. Specifications for density and area of application are developed from NFPA standards and other standards. It is desirable to specify densities rounded upward to the nearest 0.005 gpm/ft^2 (0.2 mm/min).

Prudent design should consider reasonable-to-expect variations in occupancy. This design would include not only variations in type of occupancy but also, in the case of warehousing, the anticipated future range of materials to be stored, clearance to ceiling, types of arrays, packaging, pile height, and pile stability, as well as other factors.

Design should also consider some degree of adversity at the time of a fire. To take this into account, the density and/or area of application can be increased. Another way is to use a dual-performance specification where, in addition to the normal primary specifications, a secondary density and area of application are specified. The objective of such a selection is to control the declining pressure-flow characteristic of the sprinkler system beyond the primary design flow.

A case can be made for designing feed and cross mains to lower velocities than branch lines to achieve the same result as specifying a second density and area of application.

B.2.1.3 Geometry of Area of Application (Remote Area). It is expected that, over any portion of the sprinkler system equivalent in size to the area of application, the system will achieve the minimum specified density for each sprinkler within that area.

Where a system is computer-designed, ideally the program should verify the entire system by shifting the area of application the equivalent of one sprinkler at a time so as to cover all portions of the system. Such a complete computer verification of performance of the system is most desirable, but unfortunately not all available computer verification programs currently do this.

This selection of the proper Hazen–Williams coefficient is important. New unlined steel pipe has a Hazen–Williams coefficient close to 140. However, it quickly deteriorates to 130 and, after a few years of use, to 120. Hence, the basis for normal design is a Hazen–Williams coefficient of 120 for steel-piped wet systems. A Hazen–Williams coefficient of 100 is generally used for dry pipe systems because of the increased tendency for deposits and corrosion in these systems. However, it should be realized that a new system will have fewer line losses than calculated, and the distribution pattern will be affected accordingly.

Conservatism can also be built into systems by intentionally designing to a lower Hazen–Williams coefficient than that indicated.

B.2.1.4 Ability to Predict Expected Performance from Calculated Performance. Ability to accurately predict the performance of a complex array of sprinklers on piping is basically a function of the pipe line velocity. The greater the velocity, the greater is the impact on difficult-to-assess pressure losses. These pressure losses are presently determined by empirical means that lose validity as velocities increase. This is especially true for fittings with unequal and more than two flowing ports.

The inclusion of velocity pressures in hydraulic calculations improves the predictability of the actual sprinkler system performance. Calculations should come as close as practicable to predicting actual performance. Conservatism in design should be arrived at intentionally by known and deliberate means. It should not be left to chance.

B.2.1.5 Future Upgrading of System Performance. It is desirable in some cases to build into the system the capability to achieve a higher level of sprinkler performance than needed at present. If this is to be a consideration in conservatism, consideration needs to be given to maintaining sprinkler operating pressures on the lower side of the optimum operating range and/or designing for low pipeline velocities, particularly on feed and cross mains, to facilitate future reinforcement.

EDUFIRE.IR

B.3 Effect of Clearance to Ceiling on Sprinkler Performance.

The problems with large clearances to ceiling were well recognized by the 1970s in terms of the effect both on delayed sprinkler activation and on the effect on droplet penetration through the fire plume. The work of Alpert (1972, 1975), Heskestad and Delichatsios (1979), and Beyler (1984) clearly identified the effect of clearance to ceiling on detection and activation of sprinklers. This was supplemented by the work of Heskestad and Smith (1976) in which the thermal responsiveness of sprinklers was studied and modeled. Similarly, the effect of the strong plumes resulting from large clearances to ceiling and highly challenging fires was recognized in the 1970s through the work of Yao and Kalelkar (1970), Yao (1976), and Yao (1980). This understanding was reflected in the development of large drop sprinklers in the 1970s [Yao (1997)]. The inability of ½ in. and 17⁄32 in. (12.7 mm and 13 mm) standard sprinklers to penetrate high-challenging fires was well understood and demonstrated in the 1970s [Yao (1976)]. The effect of excessive clearance to ceiling was also demonstrated in the testing summarized in Annex C.

This understanding of the role of clearance to ceiling on fire performance had a strong effect on the development of advanced sprinkler technologies.

References:

Alpert, R. (1972), "Calculation of Response Time of Ceiling-mounted Fire Detectors," *Fire Technology* 8, pp. 181–195.

Alpert, R. (1975), "Turbulent Ceiling Jet Induced by Large Scale Fire," *Combustion Science and Technology* 11, pp. 197–213.

Beyler, C.L. (1984), "A Design Method for Flaming Fire Detection," *Fire Technology* 20, No. 4, 1984, p. 5.

Heskestad, G., and Smith, H. (1976), "Investigation of a New Sprinkler Sensitivity Approval Test: The Plunge Test," FMRC Serial No. 22485, Factory Mutual Research Corporation, Norwood, MA, December 1976.

Heskestad, G., and Delichatsios, M. (1979), "The Initial Convective Flow in Fire," Seventeenth Symposium (International) on Combustion, The Combustion Institute, Pittsburgh, PA, pp. 1113–1123.

Yao, C., and Kalelkar, A. (1970), "Effect of Drop Size on Sprinkler Performance," *Fire Technology* 6, 1970.

Yao, C. (1976), "Development of Large-Drop Sprinklers," FMRC Serial 22476, RC76-T-18, Factory Mutual Research Corporation, Norwood, MA.

Yao, C. (1980), "Application of Sprinkler Technology," Engineering Applications of Fire Technology, National Bureau of Standards, Gaithersburg MD, and FMRC RC80-TP-34.

Yao, C. (1997), "Overview of Sprinkler Technology Research," Fire Safety Science-Proceedings of the Fifth International Symposium, Y. Hasemi (Ed.), International Association for Fire Safety Science, Boston, MA, pp. 93–110.

EDUFIRE.IR

ANNEX

C

Explanation of Test Data and Procedures for Rack Storage

This annex is not a part of the requirements of this NFPA document but is included for informational purposes only.

C.1

Annex C provides an explanation of the test data and procedures that led to the development of sprinkler system discharge criteria for rack storage applications. Numbers in brackets refer to paragraphs in the text.

The material contained in Section C.2 through Section C.26 of Annex C is included within the chapter text of this handbook and, therefore, is not repeated here.

EDUFIRE.IR

EDUFIRE.IR

Sprinkler System Information from the 2018 Edition of the *Life Safety Code*

ANNEX

D

This annex is not a part of the requirements of this NFPA document but is included for informational purposes only.

D.1 Introduction.

This annex is provided as an aid to the user of NFPA 13 by identifying those portions of the 2012 edition of NFPA *101* that pertain to sprinkler system design and installation. It is not intended that this annex provide complete information regarding all aspects of fire protection addressed by NFPA *101*. It is important to note that this information was copied from NFPA *101* but did not use NFPA's extract policy and is not intended to be a part of the requirements of NFPA 13.

D.1.1 The following sections cover situations where NFPA *101* provides different guidance on the design or installation of a fire sprinkler system from NFPA 13. In some cases, this different guidance is based on descriptions of unique situations handled by NFPA *101*. In other cases, this different guidance stems from the different objective for NFPA *101*, life safety of the occupant, rather than the property protection afforded by NFPA 13.

D.1.1.1 Features of Fire Protection.

D.1.1.1.1 Atriums. Glass walls and inoperable windows shall be permitted in lieu of the fire barriers where all the following are met:

(1) Automatic sprinklers are spaced along both sides of the glass wall and the inoperable windows at intervals not to exceed 6 ft (1.8 m).
(2) The automatic sprinklers specified in 8.6.7(1)(c)(i) of NFPA *101* are located at a distance from the glass wall not to exceed 12 in. (300 mm) and arranged so that the entire surface of the glass is wet upon operation of the sprinklers.
(3) The glass wall is of tempered, wired, or laminated glass held in place by a gasket system that allows the glass framing system to deflect without breaking (loading) the glass before the sprinklers operate.
(4) The automatic sprinklers required by 8.6.7(1)(c)(i) of NFPA *101* are not required on the atrium side of the glass wall and the inoperable window where there is no walkway or other floor area on the atrium side above the main floor level. [***101*:**8.6.7(1)(c)]

D.1.1.2 Special Structures and High-Rise Buildings.

D.1.1.2.1 High-rise buildings shall be protected throughout by an approved, supervised automatic sprinkler system in accordance with NFPA *101*, Section 9.7. A sprinkler control valve and a waterflow device shall be provided for each floor. [***101*:**11.8.3.1]

EDUFIRE.IR

D.1.1.3 Lodging or Rooming Houses.

D.1.1.3.1 In buildings sprinklered in accordance with NFPA 13, closets that contain equipment such as washers, dryers, furnaces, or water heaters shall be sprinklered regardless of size. [***101*:**26.3.6.2.5]

D.1.1.3.2 In existing lodging or rooming houses, sprinkler installations shall not be required in closets not exceeding 24 ft^2 (2.2 m^2) and in bathrooms not exceeding 55 ft^2 (5.1 m^2). [***101*:**26.3.6.2.6]

D.1.1.4 New Hotels and Dormitories.

D.1.1.4.1 The provisions for draft stops and closely spaced sprinklers in NFPA 13 shall not be required for openings complying with NFPA *101*, 8.6.9.1, where the opening is within the guest room or guest suite. [***101*:**28.3.5.4]

D.1.1.4.2 Listed quick-response or listed residential sprinklers shall be used throughout guest rooms and guest room suites. [***101*:**28.3.5.6]

D.1.1.5 Existing Hotels and Dormitories.

D.1.1.5.1 In guest rooms and in guest room suites, sprinkler installations shall not be required in closets not exceeding 24 ft^2 (2.2 m^2) and in bathrooms not exceeding 55 ft^2 (5.1 m^2). [***101*:**29.3.5.5]

D.1.1.6 New Apartment Buildings.

D.1.1.6.1 In buildings sprinklered in accordance with NFPA 13:

(1) Closets less than 12 ft^2 (1.1 m^2) in individual dwelling units shall not be required to be sprinklered.
(2) Closets that contain equipment such as washers, dryers, furnaces, or water heaters shall be sprinklered regardless of size.

[***101*:**30.3.5.3]

ASK THE AHJ

Can an authority having jurisdiction allow sprinklers to be omitted from small clothes closets in apartment and condominium buildings as permitted in NFPA *101*, *Life Safety Code*, (D.1.1.6.1 in NFPA 13) and the 2007 edition of NFPA 13 of (21.20.19.2.1 and 21.1.1.2) if NFPA *101* has not been adopted locally?

No. The provisions of NFPA *101* are no longer extracted into NFPA 13 as part of the mandatory requirements of NFPA 13, as was done only in the 2007 edition of NFPA 13. Per Section D.1, the provisions of NFPA *101* copied into Annex D are for informational purposes only and are not part of the enforceable requirements of NFPA 13. NFPA *101* provisions are no longer found in the NFPA 13 chapter that covers special occupancy requirements.

D.1.1.6.2 Listed quick-response or listed residential sprinklers shall be used throughout all dwelling units. [***101*:**30.3.5.6]

D.1.1.6.3 The draft stop and closely spaced sprinkler requirements of NFPA 13 shall not be required for convenience openings complying with NFPA *101*, 8.6.9.1, where the convenience opening is within the dwelling unit. [***101*:**30.3.5.5]

D.1.1.7 Existing Apartment Buildings.

D.1.1.7.1 In individual dwelling units, sprinkler installation shall not be required in closets not exceeding 24 ft^2 (2.2 m^2) and in bathrooms not exceeding 55 ft^2 (5.1 m^2). Closets that

EDUFIRE.IR

contain equipment such as washers, dryers, furnaces, or water heaters shall be sprinklered regardless of size. [***101***:31.3.5.3]

D.1.1.7.2 In buildings sprinklered in accordance with NFPA 13, bathrooms not greater than 55 ft^2 (5.1 m^2) in individual dwelling units shall not be required to be sprinklered. [***101***:31.3.5.4]

D.1.1.7.3 The draft stop and closely spaced sprinkler requirements of NFPA 13 shall not be required for convenience openings complying with NFPA *101*, 8.6.9.1, where the convenience opening is within the dwelling unit. [***101***:31.3.5.5]

D.1.1.8 Existing Residential Board and Care Occupancies.

D.1.1.8.1 Standard-response sprinklers shall be permitted for use in hazardous areas in accordance with NFPA *101*, 33.2.3.2. [***101***:33.2.2.2.4]

D.1.1.8.2 Where an automatic sprinkler system is installed, for either total or partial building coverage, all of the following requirements shall be met:

(1) The system shall be in accordance with NFPA *101*, Section 9.7, and shall initiate the fire alarm system in accordance with 33.2.3.4.1, as modified by 33.2.3.5.3.1 through 33.2.3.5.3.6 of NFPA *101*.
(2) The adequacy of the water supply shall be documented to the authority having jurisdiction.
[***101***:33.2.3.5.3]

D.1.1.8.2.1 In prompt evacuation capability facilities, all of the following shall apply:

(1) An automatic sprinkler system in accordance with NFPA 13D shall be permitted.
(2) Automatic sprinklers shall not be required in closets not exceeding 24 ft^2 (2.2 m^2) and in bathrooms not exceeding 55 ft^2 (5.1 m^2), provided that such spaces are finished with lath and plaster or materials providing a 15-minute thermal barrier.
[***101***:33.2.3.5.3.1]

D.1.1.8.2.2 In slow and impractical evacuation capability facilities, all of the following shall apply:

(1) An automatic sprinkler system in accordance with NFPA 13D with a 30-minute water supply, shall be permitted.
(2) All habitable areas and closets shall be sprinklered.
(3) Automatic sprinklers shall not be required in bathrooms not exceeding 55 ft^2 (5.1 m^2), provided that such spaces are finished with lath and plaster or materials providing a 15-minute thermal barrier.
[***101***:33.2.3.5.3.2]

D.1.1.8.2.3 In prompt and slow evacuation capability facilities, where an automatic sprinkler system is in accordance with NFPA 13, sprinklers shall not be required in closets not exceeding 24 ft^2 (2.2 m^2) and in bathrooms not exceeding 55 ft^2 (5.1 m^2), provided that such spaces are finished with lath and plaster or materials providing a 15-minute thermal barrier. [***101***:33.2.3.5.3.3]

D.1.1.8.2.4 In prompt and slow evacuation capability facilities in buildings four or fewer stories above grade plane, systems in accordance with NFPA 13R shall be permitted. [***101***:33.2.3.5.3.4]

D.1.1.8.2.5 In impractical evacuation capability facilities in buildings four or fewer stories above grade plane, systems in accordance with NFPA 13R shall be permitted. All habitable areas and closets shall be sprinklered. Automatic sprinklers shall not be required in bathrooms

EDUFIRE.IR

not exceeding 55 ft^2 (5.1 m^2), provided that such spaces are finished with lath and plaster or materials providing a 15-minute thermal barrier. [***101*:**33.2.3.5.3.5]

D.1.1.8.2.6 Initiation of the fire alarm system shall not be required for existing installations in accordance with NFPA *101*, 33.2.3.5.6. [***101*:**33.2.3.5.3.6]

D.1.1.8.2.7 All impractical evacuation capability facilities shall be protected throughout by an approved, supervised automatic sprinkler system in accordance with NFPA *101*, 33.2.3.5.3. [***101*:**33.2.3.5.3.7]

D.1.1.9 New Mercantile Occupancies.

D.1.1.9.1 Protection of Vertical Openings. Any vertical opening shall be protected in accordance with NFPA *101*, Section 8.6, except under the following conditions:

(1) In Class A or Class B mercantile occupancies protected throughout by an approved, supervised automatic sprinkler system in accordance with NFPA *101*, 9.7.1.1(1), unprotected vertical openings shall be permitted at one of the following locations:
   (a) Between any two floors
   (b) Among the street floor, the first adjacent floor below, and adjacent floor (or mezzanine) above
(2) In Class C mercantile occupancies, unprotected openings shall be permitted between the street floor and the mezzanine.
(3) The draft stop and closely spaced sprinkler requirements of NFPA 13 shall not be required for unenclosed vertical openings permitted in NFPA *101*, 36.3.1(1) and (2).

[***101*:**36.3.1]

D.1.1.9.2 Rooms housing building service equipment, janitor closets, and service elevators shall be permitted to open directly onto exit passageways, provided that all of the following criteria are met:

(1) The required fire resistance rating between such rooms or areas and the exit passageway shall be maintained in accordance with NFPA *101*, 7.1.3.2.
(2) Such rooms or areas shall be protected by an approved, supervised automatic sprinkler system in accordance with NFPA *101*, 9.7.1.1(1), but the exceptions in NFPA 13 allowing the omission of sprinklers from such rooms shall not be permitted.

[***101*:**36.4.4.9.2]

D.1.1.10 Existing Mercantile Occupancies.

D.1.1.10.1 Protection of Vertical Openings. Any vertical opening shall be protected in accordance with NFPA *101*, Section 8.6, except under any of the following conditions:

(1) In Class A or Class B mercantile occupancies protected throughout by an approved, supervised automatic sprinkler system in accordance with NFPA *101*, 9.7.1.1(1), unprotected vertical openings shall be permitted at one of the following locations:
   (a) Between any two floors
   (b) Among the street floor, the first adjacent floor below, and the adjacent floor (or mezzanine) above
(2) In Class C mercantile occupancies, unprotected openings shall be permitted between the street floor and the mezzanine.
(3) The draft stop and closely spaced sprinkler requirements of NFPA 13 shall not be required for unenclosed vertical openings permitted in NFPA *101*, 36.3.1(1) and (2).

[***101*:**37.3.1]

EDUFIRE.IR

D.1.1.10.2 Rooms housing building service equipment, janitor closets, and service elevators shall be permitted to open directly onto exit passageways, provided that all of the following criteria are met:

(1) The required fire resistance rating between such rooms or areas and the exit passageway shall be maintained in accordance with NFPA *101*, 7.1.3.2.
(2) Such rooms or areas shall be protected by an approved automatic sprinkler system in accordance with NFPA *101*, 9.7.1.1(1) but the exceptions in NFPA 13 allowing the omission of sprinklers from such rooms shall not be permitted.

[***101*:**37.4.4.9.2]

D.1.1.11 Industrial Occupancies.

D.1.1.11.1 Special Provisions — High-Rise Buildings. The provisions of NFPA *101*, 11.8.5.3.4(2) for jockey pumps and NFPA *101*, 11.8.5.3.4(3) for air compressors serving dry-pipe and preaction systems shall not apply to special-purpose industrial occupancies. [***101*:**40.4.2.2]

D.2 Life Safety Code.

D.2.1 Features of Fire Protection.

D.2.1.1 Design Requirements. (Reserved)

D.2.1.2 Installation Requirements.

D.2.1.2.1 Atriums. Glass walls and inoperable windows shall be permitted in lieu of the fire barriers where all the following are met:

(1) Automatic sprinklers are spaced along both sides of the glass wall and the inoperable windows at intervals not to exceed 6 ft (1.8 m).
(2) The automatic sprinklers specified in NFPA *101*, 8.6.7(1)(c)(i) are located at a distance from the glass wall not to exceed 12 in. (300 mm) and arranged so that the entire surface of the glass is wet upon operation of the sprinklers.
(3) The glass wall is of tempered, wired, or laminated glass held in place by a gasket system that allows the glass framing system to deflect without breaking (loading) the glass before the sprinklers operate.
(4) The automatic sprinklers required by NFPA *101*, 8.6.7(1)(c)(i) are not required on the atrium side of the glass wall and the inoperable window where there is no walkway or other floor area on the atrium side above the main floor level. [***101*:**8.6.7(1)(c)]

D.2.2 Special Structures and High-Rise Buildings.

D.2.2.1 Design Criteria.

D.2.2.1.1 High-rise buildings shall be protected throughout by an approved, supervised automatic sprinkler system in accordance with NFPA *101*, Section 9.7. A sprinkler control valve and a waterflow device shall be provided for each floor. [***101*:**11.8.3.1]

D.2.3 New Assembly Occupancies.

D.2.3.1 Design Criteria.

D.2.3.1.1 Protection of Vertical Openings. Any vertical opening shall be enclosed or protected in accordance with Section 8.6 of NFPA *101*, unless otherwise permitted by one of the following:

EDUFIRE.IR

(1) Stairs or ramps shall be permitted to be unenclosed between balconies or mezzanines and main assembly areas located below, provided that the balcony or mezzanine is open to the main assembly area.
(2) Exit access stairs from lighting and access catwalks, galleries, and gridirons shall not be required to be enclosed.
(3) Assembly occupancies protected by an approved, supervised automatic sprinkler system in accordance with Section 9.7 of NFPA *101* shall be permitted to have unprotected vertical openings between any two adjacent floors, provided that such openings are separated from unprotected vertical openings serving other floors by a barrier complying with 8.6.5 of NFPA *101*.
(4) Assembly occupancies protected by an approved, supervised automatic sprinkler system in accordance with Section 9.7 of NFPA *101* shall be permitted to have convenience stair openings in accordance with 8.6.9.2 of NFPA *101*.

[***101:***12.3.1]

D.2.3.2 Installation Requirements. (Reserved)

D.2.4 Existing Assembly Occupancies.

D.2.4.1 Design Criteria.

D.2.4.1.1 Protection of Vertical Openings. Any vertical opening shall be enclosed or protected in accordance with NFPA *101*, Section 8.6, unless otherwise permitted by one of the following:

(1) Stairs or ramps shall be permitted to be unenclosed between balconies or mezzanines and main assembly areas located below, provided that the balcony or mezzanine is open to the main assembly area.
(2) Exit access stairs from lighting and access catwalks, galleries, and gridirons shall not be required to be enclosed.
(3) Assembly occupancies protected by an approved, supervised automatic sprinkler system in accordance with NFPA *101*, Section 9.7, shall be permitted to have unprotected vertical openings between any two adjacent floors, provided that such openings are separated from unprotected vertical openings serving other floors by a barrier complying with NFPA *101*, 8.6.5.
(4) Assembly occupancies protected by an approved, supervised automatic sprinkler system in accordance with NFPA *101*, Section 9.7, shall be permitted to have convenience stair openings in accordance with NFPA *101*, 8.6.9.2.

[***101:***13.3.1]

D.2.4.2 Installation Requirements. (Reserved)

D.2.5 New Educational Occupancies. (Reserved)

D.2.6 Existing Educational Occupancies. (Reserved)

D.2.7 New Day-Care Occupancies. (Reserved)

D.2.8 Existing Day-Care Occupancies. (Reserved)

D.2.9 New Health Care Occupancies. (Reserved)

D.2.10 Existing Health Care Occupancies. (Reserved)

D.2.11 New Ambulatory Health Care Occupancies. (Reserved)

EDUFIRE.IR

D.2.12 Existing Ambulatory Health Care Occupancies. (Reserved)

D.2.13 New Detention and Correctional Occupancies. (Reserved)

D.2.14 Existing Detention and Correctional Occupancies. (Reserved)

D.2.15 One- and Two-Family Dwellings. (Reserved)

D.2.16 Lodging or Rooming Houses.

D.2.16.1 Design Requirements. (Reserved)

D.2.16.2 Installation Requirements.

D.2.16.2.1 In buildings sprinklered in accordance with NFPA 13 closets that contain equipment such as washers, dryers, furnaces, or water heaters shall be sprinklered, regardless of size. [***101***:26.3.6.2.5]

D.2.16.2.2 In existing lodging or rooming houses, sprinkler installations shall not be required in closets not exceeding 24 ft^2 (2.2 m^2) and in bathrooms not exceeding 55 ft^2 (5.1 m^2). [***101***:26.3.6.2.6]

D.2.17 New Hotels and Dormitories.

D.2.17.1 Design Requirements. (Reserved)

D.2.17.2 Installation Requirements.

D.2.17.2.1 The provisions for draft stops and closely spaced sprinklers in NFPA 13 shall not be required for openings complying with NFPA *101*, 8.6.9.1, where the opening is within the guest room or guest suite. [***101***:28.3.5.4]

D.2.17.2.2 Listed quick-response or listed residential sprinklers shall be used throughout guest rooms and guest room suites. [***101***:28.3.5.6]

D.2.18 Existing Hotels and Dormitories.

D.2.18.1 Design Requirements. (Reserved)

D.2.18.2 Installation Requirements.

D.2.18.2.1 In guest rooms and in guest room suites, sprinkler installations shall not be required in closets not exceeding 24 ft^2 (2.2 m^2) and in bathrooms not exceeding 55 ft^2 (5.1 m^2). [***101***:29.3.5.5]

D.2.19 New Apartment Buildings.

D.2.19.1 Design Requirements. (Reserved)

D.2.19.2 Installation Requirements.

D.2.19.2.1 In buildings sprinklered in accordance with NFPA 13:

(1) Closets less than 12 ft^2 (1.1 m^2) in individual dwelling units shall not be required to be sprinklered.
(2) Closets that contain equipment such as washers, dryers, furnaces, or water heaters shall be sprinklered regardless of size.

[***101***:30.3.5.3]

EDUFIRE.IR

D.2.19.2.2 Listed quick-response or listed residential sprinklers shall be used throughout all dwelling units. [***101*:**30.3.5.6]

D.2.19.2.3 The draft stop and closely spaced sprinkler requirements of NFPA 13 shall not be required for convenience openings complying with NFPA *101*, 8.6.9.1, where the convenience opening is within the dwelling unit. [***101*:**30.3.5.5]

D.2.20 Existing Apartment Buildings.

D.2.20.1 Design Requirements. (Reserved)

D.2.20.2 Installation Requirements.

D.2.20.2.1 In individual dwelling units, sprinkler installation shall not be required in closets not exceeding 24 ft^2 (2.2 m^2) and in bathrooms not exceeding 55 ft^2 (5.1 m^2). Closets that contain equipment such as washers, dryers, furnaces, or water heaters shall be sprinklered, regardless of size. [***101*:**31.3.5.3]

D.2.20.2.2 The draft stop and closely spaced sprinkler requirements of NFPA 13 shall not be required for convenience openings complying with NFPA *101*, 8.6.9.1, where the convenience opening is within the dwelling unit. [***101*:**31.3.5.5]

D.2.21 New Residential Board and Care Occupancies. (Reserved)

D.2.22 Existing Residential Board and Care Occupancies.

D.2.22.1 Design Requirements. (Reserved)

D.2.22.2 Installation Requirements.

D.2.22.2.1 Standard-response sprinklers shall be permitted for use in hazardous areas in accordance with NFPA *101*, 33.2.3.2. [***101*:**33.2.2.2.4]

D.2.22.2.2 In prompt and slow evacuation facilities, where an automatic sprinkler system is in accordance with NFPA 13 sprinklers shall not be required in closets not exceeding 24 ft^2 (2.2 m^2) and in bathrooms not exceeding 55 ft^2 (5.1 m^2), provided that such spaces are finished with lath and plaster or materials providing a 15-minute thermal barrier. [***101*:**33.2.3.5.3.3]

D.2.23 New Mercantile Occupancies.

D.2.23.1 Design Requirements. (Reserved)

D.2.23.2 Installation Requirements.

D.2.23.2.1 Protection of Vertical Openings. Any vertical opening shall be protected in accordance with NFPA *101*, Section 8.6, except under any of the following conditions:

(1) In Class A or Class B mercantile occupancies protected throughout by an approved, supervised automatic sprinkler system in accordance with NFPA *101*, 9.7.1.1(1), unprotected vertical openings shall be permitted at one of the following locations:
   (a) Between any two floors
   (b) Among the street floor, the first adjacent floor below, and adjacent floor (or mezzanine) above
(2) In Class C mercantile occupancies, unprotected openings shall be permitted between the street floor and the mezzanine.
(3) The draft stop and closely spaced sprinkler requirements of NFPA 13 shall not be required for unenclosed vertical openings permitted in NFPA *101*, 36.3.1(1) and (2).

[***101*:**36.3.1]

EDUFIRE.IR

D.2.23.2.2 Rooms housing building service equipment, janitor closets, and service elevators shall be permitted to open directly onto exit passageways, provided that all of the following criteria are met:

(1) The required fire resistance rating between such rooms or areas and the exit passageway shall be maintained in accordance with NFPA *101*, 7.1.3.2.
(2) Such rooms or areas shall be protected by an approved, supervised automatic sprinkler system in accordance with NFPA *101*, 9.7.1.1(1) but the exceptions in NFPA 13 allowing the omission of sprinklers from such rooms shall not be permitted.

[***101*:**36.4.4.9.2]

D.2.24 Existing Mercantile Occupancies.

D.2.24.1 Design Requirements. (Reserved)

D.2.24.2 Installation Requirements.

D.2.24.2.1 Protection of Vertical Openings. Any vertical opening shall be protected in accordance with NFPA *101*, Section 8.6, except under any of the following conditions:

(1) In Class A or Class B mercantile occupancies protected throughout by an approved, supervised automatic sprinkler system in accordance with NFPA *101*, 9.7.1.1(1), unprotected vertical openings shall be permitted at one of the following locations:
    (a) Between any two floors
    (b) Among the street floor, the first adjacent floor below, and the adjacent floor (or mezzanine) above
(2) In Class C mercantile occupancies, unprotected openings shall be permitted between the street floor and the mezzanine.
(3) The draft stop and closely spaced sprinkler requirements of NFPA 13 shall not be required for unenclosed vertical openings permitted in NFPA *101*, 36.3.1(1) and (2). [***101*:**37.3.1]

D.2.24.2.2 Rooms housing building service equipment, janitor closets, and service elevators shall be permitted to open directly onto exit passageways, provided that all of the following criteria are met:

(1) The required fire resistance rating between such rooms or areas and the exit passageway shall be maintained in accordance with NFPA *101*, 7.1.3.2.
(2) Such rooms or areas shall be protected by an approved, supervised automatic sprinkler system in accordance with NFPA *101*, 9.7.1.1(1), but the exceptions in NFPA 13 allowing the omission of sprinklers from such rooms shall not be permitted.

[***101*:**37.4.4.9.2]

D.2.25 New Business Occupancies.

D.2.25.1 Design Requirements. (Reserved)

D.2.25.2 Installation Requirements. (Reserved)

D.2.26 Existing Business Occupancies.

D.2.26.1 Design Requirements. (Reserved)

D.2.26.2 Installation Requirements. (Reserved)

D.2.27 Industrial Occupancies. (Reserved)

D.2.27.1 Design Criteria.

EDUFIRE.IR

D.2.27.1.1 Special Provisions — High-Rise Buildings. The provisions of NFPA *101*, 11.8.5.3.4(2), for jockey pumps and NFPA *101*, 11.8.5.3.4(3), for air compressors serving dry-pipe and pre-action systems shall not apply to special-purpose industrial occupancies. [***101***:40.2.2]

D.2.28 Storage Occupancies. (Reserved)

References Cited in Commentary

National Fire Protection Association, 1 Batterymarch Park, Quincy, MA 02169-7471.
NFPA *101®*, *Life Safety Code®*, 2018 edition.

EDUFIRE.IR

Development of the Design Approach to Conform with ASCE/SEI 7 and Suggested Conversion Factor Adjustments for Locations Outside the United States

ANNEX

E

This annex is not a part of the requirements of this NFPA document but is included for informational purposes only.

E.1 General.

Seismic design of nonstructural components is governed by the provisions of Chapter 13 of ASCE/SEI 7, *Minimum Design Loads for Buildings and Other Structures*. In ASCE/SEI 7, fire sprinkler piping is classified as a "Designated Seismic System," due to its critical safety function. Design earthquake forces are multiplied by an importance factor, I_p = 1.5, and both the bracing and the piping itself must be designed for seismic forces. The seismic design requirements for the hanging and bracing of sprinkler piping systems provided in NFPA 13, Chapter 18, presume that sprinkler piping is being constructed in the United States or in a country or jurisdictions where the seismic requirements are those specified in ASCE/SEI 7. There are locations outside the United States that wish to use the seismic design requirements of NFPA 13, Chapter 18. In Section E.3 of this annex, suggested conversion factor adjustments are provided to adjust country building code design ground motion criteria to those in ASCE/SEI 7 so the procedures of NFPA 13, Chapter 18, can be used.

The lateral sway bracing provisions of 18.5.5 were developed to allow the use of the concept of zone of influence (ZOI), while providing designs that comply with ASCE/SEI 7. One of the main changes between the current seismic sway bracing design approach adopted in NFPA 13 and the approach used in early editions of NFPA 13 is that the spacing of the sway braces can be constrained by the flexural capacity of the pipe, as well as the capacity of the brace assembly or the capacity of the connection between the brace assembly and the supporting structure. NFPA 13 provides a design that complies with the seismic design requirements of ASCE/SEI 7 for the pipe itself.

The ZOI approach yields the force demand on the bracing element and connections to the structure. Another way to look at a ZOI force is as a reaction in a system of continuous beams (i.e., the multiple spans of a piping system). By using conservative simplifying assumptions, a maximum ZOI force limited by the flexural capacity of the pipe can be developed for a given pipe size and span (spacing between horizontal sway braces). The method used to develop these maximum ZOI forces is described in the following paragraphs, along with a discussion of the assumptions on the geometry of the piping system, the determination of the seismic design force coefficients, and the flexural capacity of the pipe.

In the discussion that follows, the term "main" can be taken to mean a sprinkler main, either a feed main or a cross-main, that requires sway bracing.

E.2 Assumptions on System Geometry.

While every fire sprinkler system is uniquely designed for a particular structure, there are general similarities in the layout and geometry that can be used to simplify the design approach

EDUFIRE.IR

for earthquake protection. These similarities were used to develop assumptions on the effects of piping system continuity on the distribution of bending and shear forces in the pipe, and assumptions on spacing of branch lines between sway brace locations.

E.2.1 Continuity in Piping Systems. For lateral brace design purposes, piping systems can be idealized as a system of continuous beams. The bending moments in the sprinkler mains (the beams) were computed assuming three continuous spans, which generates the largest bending moment in any system of continuous beams. The loads generated by the branch lines are idealized as point loads. The tributary mass of the main is lumped along with the mass of the branch lines as point loads at the assumed branch line locations.

E.2.2 Branch Line Locations. In many sprinkler system installations, the branch lines constitute a substantial portion of the seismic mass. While there are significant variations in the spacing of the branch lines, their geometry is constrained by the need to provide adequate water coverage, which imposes limits on the spacing of the branches. Defining a "span" of the main as the distance between lateral sway braces, the seismic provisions make the following assumptions:

(1) There is a branch located at the center of the sprinkler main for spans of 25 ft (7.6 m) or less.
(2) There are branches at third-points of the sprinkler main for spans greater than 25 ft (7.6 m) and less than 40 ft (12 m).
(3) There are branches at quarter-points of the sprinkler main for spans of 40 ft (12 m).

It was further assumed that there is a branch line located in close proximity to each sway brace.

The layout of branch lines, maximum bending moment M_{max} in the pipe, and reaction R_{max} (horizontal loads at sway brace locations) for sprinkler mains with spans less than 25 ft (7.6 m) is illustrated in Figure E.2.2(a). Maximum demands for spans greater than 25 ft (7.6 m) and less than 40 ft (12 m) are given in Figure E.2.2(b), and for spans of 40 ft (12 m) in Figure E.2.2(c).

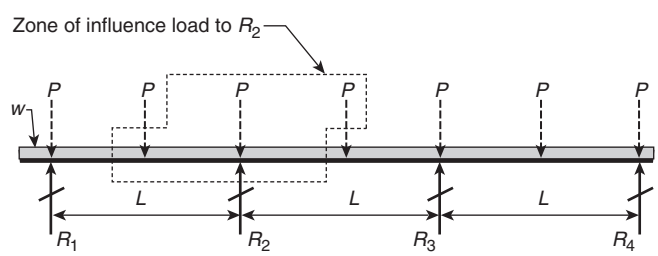

L = distance between sway braces (span)
P = branch line lateral load + tributary lateral load from main
w = lateral load of the main (included in P)
R_1, R_2, R_3, R_4 = zone of influence load (reactions)

$$M_{max} = 0.175PL$$
$$R_{max} \approx 2P$$

FIGURE E.2.2(a) *Maximum Demands for Spans Less Than 25 ft (7.6 m).*

EDUFIRE.IR

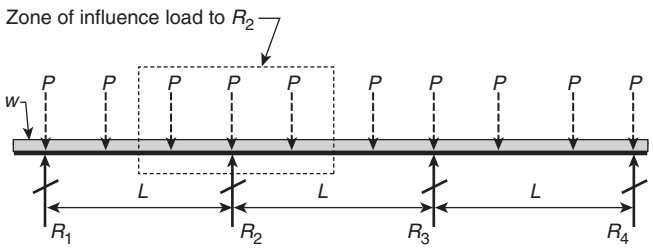

L = distance between sway braces (span)
P = branch line lateral load + tributary lateral load from main
w = lateral load of the main (included in P)
R_1, R_2, R_3, R_4 = zone of influence load (reactions)

$M_{max} = 0.267PL$

$R_{max} \approx 3P$

FIGURE E.2.2(b) *Maximum Demands for Spans Greater Than 25 ft (7.6 m) and Less Than 40 ft (12.2 m).*

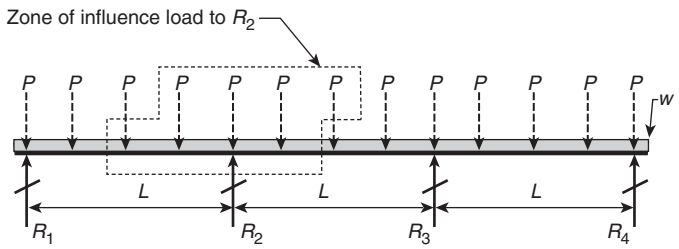

L = distance between sway braces (span)
P = branch line lateral load + tributary lateral load from main
w = lateral load of the main (included in P)
R_1, R_2, R_3, R_4 = zone of influence load (reactions)

$M_{max} = 0.372PL$

$R_{max} \approx 4P$

FIGURE E.2.2(c) *Maximum Demands for Spans of 40 ft (12 m).*

E.3 Computing the Seismic Demand on Piping Systems.

In ASCE/SEI 7, seismic demands on nonstructural components and systems are a function of the ground shaking intensity, the ductility and dynamic properties of the component or system, and the height of attachment of the component in the structure. Seismic forces are determined at strength design (SD) levels. The horizontal seismic design force is given by

$$F_p = \frac{0.4 a_p S_{DS} W_p}{\left(\frac{R_p}{I_p}\right)}\left(1 + 2\frac{z}{h}\right) \qquad \textbf{[E.3a]}$$

where:

F_p = seismic design force
S_{DS} = short period spectral acceleration, which takes into account soil conditions at the site
a_p = component amplification factor, taken as 2.5 for piping systems
I_p = component importance factor, taken as 1.5 for fire sprinkler systems
z = height of the component attachment to the structure
h = average roof height of the structure
W_p = component operating weight
R_p = component response modification factor as follows:
R_p = 9 for high-deformability piping with joints made by welding or brazing
R_p = 4.5 for high- or limited-deformability piping with joints made by threading, bonding, compression couplings, or grooved couplings
R_p = 1.5 for low-deformability piping such as cast iron and nonductile plastics

F_p need not be greater than 1.6 $S_{DS} I_p W_p$ and cannot be less than 0.30 $S_{DS} I_p W_p$.

As illustrated in Figure E.3, NFPA 13 uses a simplified seismic factor, C_p, which combines ground shaking S_{DS}, dynamic amplification a_p, component response R_p/I_p, and location in the building (z/h) into a single variable. Conservative assumptions are made for each variable so that the only information needed to find C_p is the short-period mapped spectral acceleration for the maximum considered earthquake (MCE), S_s.

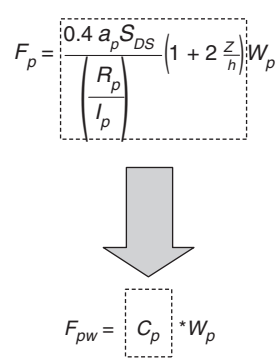

FIGURE E.3 *Simplified Seismic Factor, C_p.*

EDUFIRE.IR

The importance factor (I_p) for fire sprinkler systems is specified in ASCE/SEI 7 as 1.5. The amplification factor (a_p) for piping systems is specified as 2.5. Piping systems (even when seismically braced) are considered flexible, since the fundamental period of vibration for the system is greater than 0.06 seconds. A component response factor of $R_p = 4.5$ was assumed for all piping. Finally, it was assumed that the system is installed at the roof level, h.

Assume the system is laterally braced at the roof, $z = h$ and substitute these values into the lateral force equation

$$F_p = \frac{0.4 a_p S_{DS} W_p}{\left(\frac{R_p}{I_p}\right)}\left(1+2\frac{z}{h}\right) = \frac{0.4(2.5) S_{DS} W_p}{\left(\frac{R_p}{I_p}\right)}\left(1+2\frac{h}{h}\right) = (0.1)\, S_{DS} W_p \qquad \textbf{[E.3b]}$$

ASCE/SEI 7 forces are determined at the strength design (SD) level. NFPA 13 is based on allowable stress design (ASD). To convert F_p to an ASD load, F_{pw}, the load from ASCE/SEI 7 is multiplied by a 0.7 load factor.

$$F_{pw} = 0.7F_p = 0.7S_{DS}W_p = C_p W_p \qquad \textbf{[E.3c]}$$

Solving for C_p,

$$C_p = 0.7S_{DS} \qquad \textbf{[E.3d]}$$

The short-period spectral acceleration, S_{DS}, is obtained by modifying the mapped short-period spectral acceleration, S_s, for the effects of the local soil conditions. In the United States, values for S_S are obtained from seismic hazard maps published by the U.S. Geological Survey (USGS). Web-based tools available from USGS will generate values for S_S based on the latitude and longitude of the project site. Most countries do not base their seismic hazard maps on the ground motion criteria that USGS uses to determine the S_S values specified in ASCE/SEI 7. Instead, these countries might use seismic zones [similar to those in the outdated Uniform Building Code (UBC)] to convey the seismic hazard. Although different countries might use different zone identifiers, often zones are numbered, with the highest number seismic zone having the strongest potential ground motions (e.g., in the UBC, Zones 0 to 4 were used, and Zone 4 had the highest seismic hazard). Although not universally true, often there is a zone factor, Z, associated with each zone that represents the peak ground acceleration based on design earthquake ground motions having a 10 percent chance of being exceeded in a 50-year period (i.e., about a 500-year return period). For these countries, a suggested correlating adjustment is $S_S = 3.75\ Z$. The 3.75 factor was determined by multiplying the peak ground acceleration by a factor of 2.5 to convert it to peak spectral acceleration and then by a factor of 1.5 to convert design earthquake ground motions to maximum considered earthquake ground motions, which are the basis for determining S_S. For example, for a Z factor of 0.4 (the highest value in the UBC), the value of S_S would be 1.5 (resulting in $C_p = 0.7$ from Table 18.5.9.3). Also, for these countries, if a value of S_1 is needed, the value might be taken as 1.5 Z, which is the same relative relationship between the short period and one second spectral acceleration that was used in the 1997 UBC. The spectral acceleration used for seismic design is determined by

$$-S_{DS} = \frac{2}{3} S_s F_a \qquad \textbf{[E.3e]}$$

F_a is an amplification factor based on soil conditions and the intensity of ground shaking expected (measured by S_S). Soil conditions are defined by site classification, ranging from Site Class A (hard rock) to Site Class F (extremely soft soils and fill). The values of F_a are given in ASCE/SEI 7 Table 11.4-1, and vary from 0.8 to 2.5. For the purposes of the ZOI method, the values of F_a are taken as the maximum tabulated values and are summarized in Table E.3.

EDUFIRE.IR

$$C_p = 0.7\,S_{DS} = \frac{2}{3}(0.7\,S_s F_a) = 0.467\,S_s F_a \qquad \textbf{[E.3f]}$$

Table 18.5.9.3 was populated by solving for C_p for different values of S_S. For example when $S_S = 1.0$:

$$C_p = 0.467\,S_s F_a = 0.467\,(1.0)(1.1) = 0.51 \qquad \textbf{[E.3g]}$$

TABLE E.3 *Values of F_a*

	Mapped Maximum Considered Earthquake Spectral Response Acceleration Parameter at Short Period					
	$S_S \le 0.33$	$S_S = 0.5$	$S_S = 0.75$	$S_S = 0.95$	$S_S = 1.0$	$S_S \ge 1.25$
F_a	2.24	1.7	1.2	1.1	1.1	1.0

Note: Use straight-line interpolation for intermediate values of S_S.

E.4 Flexural Capacity of Piping.

The flexural capacity for different diameters and thicknesses of pipe were computed using allowable stress design (ASD). NFPA 13 has traditionally used ASD for design. While ASCE/SEI 7 generally uses the strength design (SD) approach, ASD is preferred for the design of piping systems. For example, the ASTM B31, *Standards of Pressure Piping*, series of piping codes are based on ASD. ASD was chosen for sprinkler piping design to limit the complexity of the analysis. Use of SD would require the use of the plastic modulus, *Z*, of the pipe rather than the elastic section modulus, *S*. Use of *Z* would trigger analysis of local and global buckling behavior of the pipe. SD is most appropriate when used with compact pipe sections that can develop the full limit capacity of the material, including strain hardening. Thin-wall pipes and materials without well-defined post-elastic behavior are not easily considered using SD.

Permissible stresses in the pipe for seismic loading are from 13.6.11 of ASCE/SEI 7. Assuming high- or limited-deformability pipe with threaded or grooved couplings, the permissible flexural stress under SD level demands is $0.7F_y$, where F_y is the yield stress of the material. Since seismic design in NFPA 13 is based on ASD, the SD capacity must be reduced to an ASD level.

The permissible flexural stress for ASD is determined by adjusting the SD level flexural capacity. The SD capacity is first reduced by a load factor to ASD levels, and then can be increased by the allowable stress increase for seismic loading. The use of an allowable stress increase for piping systems is typical when determining the strength of the pipe itself.

For fire sprinkler piping, the SD flexural capacity, M_{cap}, is reduced by a load factor of 0.7 to yield the ASD flexural capacity. The duration of load factor for the piping system, taken as 1.33, is then applied. Taking *S* as the section modulus of pipe, this yields an allowable moment capacity in the pipe.

$$M_{cap} = 0.7(1.33)(0.7SF_y) = 0.65SF_y \qquad \textbf{[E.4a]}$$

To populate Table 18.5.5.2(a) through Table 18.5.5.2(i), which give the maximum zone of influence loads, the largest reaction (due to branch lines and the tributary mass of the main) limited by flexure for a given pipe size and span between sway braces was computed.

For example, to determine the maximum permissible ZOI for a 4 in. (100 mm) diameter steel Schedule 10 main spanning 30 ft (9.1 m), first compute the flexural capacity of the pipe.

EDUFIRE.IR

S = 1.76 in.^{3} (28800 mm^3)
F_y = 30,000 psi (2050 bar)

The flexural capacity of the pipe is

$$M_{cap} = (0.65F_y)S = (0.65)(30{,}000)(1.76) \quad \textbf{[E.4b]}$$

= 34,320 in.-lb (3900 kgn) = 2860 ft-lb (395 kgn)

For spans greater than 25 ft (7.6 m) and less than 40 ft (12 m), the branch lines are assumed to be located at ⅓-points in the span. The point load P is associated with the branch line and tributary mass of the main and L is distance between sway braces. From Figure E.2.2(b), the maximum moment in the main, M_{max}, is

$M_{max} = 0.267PL$

Setting $M_{cap} = M_{max}$ and solving for P,

$$M_{cap} = (0.65F_y)S = 0.267PL$$

$$P = \frac{M_{cap}}{0.267\,L} \quad \textbf{[E.4c]}$$

$$P = \frac{2860}{0.267\,(30) = 357\,\text{lb}}$$

The maximum permissible ZOI load = 3P = 1071 lb. (485 kg).

E.5 Sample Seismic Calculation Using the ZOI Method.

To illustrate the application of the ZOI method, the approach can be applied to a sample problem based on the sample seismic bracing calculation in Figure A.18.5(b). The sample calculation yielded a total weight of 480 lb (220 kg), which was obtained using a seismic factor of 0.5. To determine our own seismic factor, to get the total weight of the water-filled pipe, divide by the seismic factor of 0.5,

$$W_p = \frac{480}{0.5} = 960 \text{ lb (435 kg)} \quad \textbf{[E.5a]}$$

Assume the 4 in. (100 mm) Schedule 10 pipe is the main that will be braced and that distance between sway braces (span) is 20 ft (6.1 m). The installation is in a region of high seismicity, and based on the latitude and longitude of the building site, S_S = 1.75.

To calculate the seismic load, use Table 18.5.9.3 to determine the seismic coefficient, C_p. The value of S_s = 1.75 coordinates to 0.82.

The horizontal force on the brace, from 18.5.6.2, is

$$F_{pw} = C_p W_p = 0.82(960) = 787\,\text{1b} \quad \textbf{[E.5b]}$$

From Table 18.5.5.2(a), the maximum ZOI load, F_{pw}, for a 4 in. Schedule 10 pipe spanning 20 ft (6.1 m) is 1634 lb (740 kg), which is larger than the calculated demand of 787 lb (355 kg). The 4 in. (100 mm) Schedule 10 pipe is adequate for the seismic load and a brace would be selected with a minimum capacity of 787 lb (355 kg).

EDUFIRE.IR

If the sway brace was attached to the 2 in. (50 mm) Schedule 40 pipe, the ZOI demand F_{pw} of 787 lb (355 kg) would be compared to the maximum capacity for a 2 in. (50 mm) Schedule 40 pipe found in Table 18.5.5.2(c) and Table 18.5.5.2(d). For a 20 ft (6.1 m) span, this is 520 lb (236 kg), less than the demand of 787 lb (355 kg). A 2 in. (50 mm) pipe would be inadequate, and a sway brace would have to be added to reduce the ZOI demand, or the system pipe size increased.

E.6 Limitations of the ZOI Method.

The ZOI approach can be used for a variety of piping materials. There are, however, important limitations of which the designer should be aware. The first is that the appropriate component response factor, R_p, must be used. To select the proper value, the piping systems must be classified as high-, limited-, or low-deformability. Definitions of these terms are given in Section 11.2 of ASCE/SEI 7. The second major assumption is that the flexural behavior of the pipe is not governed by local buckling of the pipe wall. For steel pipe, this can be achieved by observing the thickness to diameter limits given in the *AISC Specifications for the Design, Fabrication, and Erection of Structural Steel Buildings*. Establishing the local buckling characteristics of pipe fabricated from other materials can require testing.

The tables for the maximum load, F_{pw}, in zone of influence are based on common configurations of mains and branch lines. There can be cases where the actual configuration of the piping system could generate higher stresses in the piping than assumed in the tables. For example, a main braced at 40 ft (12.2 m) intervals, with a single branch line in the center of the span, can have a smaller maximum load capacity, F_{pw}, than the tabulated value. Where the configuration of the mains and branch lines vary significantly from the assumed layout, the pipe stresses should be checked by engineering analysis.

E.7 Allowable Loads for Concrete Anchors.

This section provides step-by-step examples of the procedures for determining the allowable loads for concrete anchors as they are found in Table 18.5.12.2(a) through Table 18.5.12.2(j). Table 18.5.12.2(a) through Table 18.5.12.2(j) were developed using the prying factors found in Table E.7(a) and the representative strength design seismic shear and tension values for concrete anchors found in Table E.7(b).

TABLE E.7(a) *Prying Factors for Table 18.5.12.2(a) through Table 18.5.12.2(j) Concrete Anchors*

Pr Range	***Figure 18.5.12.1 Designated Angle Category***								
	A	***B***	***C***	***D***	***E***	***F***	***G***	***H***	***I***
Lowest	2	1.1	0.7	1.2	1.1	1.1	1.4	0.9	0.8
Low	3.5	1.8	1.0	1.7	1.8	2.0	1.9	1.3	1.1
High	5.0	2.5	1.3	2.2	2.5	2.9	2.4	1.7	1.4
Highest	6.5	3.2	1.6	2.7	3.2	3.8	2.9	2.1	1.7

EDUFIRE.IR

TABLE E.7(b) *Representative Strength Design Seismic Shear and Tension Values Used for Concrete Anchors*

Anchor Dia. (in.)	*Min. Nominal Embedment (in.)*	*LRFD Tension (lb)*	*LRFD Shear (lb)*	*Anchor Dia. (in.)*	*Min. Effective Embedment (in.)*	*LRFD Tension (lb)*	*LRFD Shear (lb)*
Wedge Anchors in 3000 psi (207 bar) Lightweight Sand Concrete on 4 ½ in. Flute Width Metal Deck				***Metal Deck Inserts in 3000 psi (207 bar) Lightweight Sand Concrete on 4 ½ in. Flute Width Metal Deck***			
⅜	2.375	670	871	⅜	1.750	804	774
½	3.750	714	1489	½	1.750	804	837
⅝	3.875	936	1739	⅝	1.750	804	837
¾	4.500	1372	1833	¾	1.750	804	1617
Wedge Anchors in 3000 psi (207 bar) Lightweight Sand Concrete				***Wood Form Inserts in 3000 psi (207 bar) Lightweight Sand Concrete***			
⅜	2.375	739	1141	⅜	1.100	1358	1235
½	3.750	983	1955	½	1.690	1358	1811
⅝	3.875	1340	2091	⅝	1.750	1358	1811
¾	4.500	1762	3280	¾	1.750	1358	1811
Wedge Anchors in 3000 psi (207 bar) Normal Weight Concrete				***Wood Form Inserts in 3000 psi (207 bar) Normal Weight Concrete***			
⅜	2.375	1087	1170	⅜	1.100	1598	1235
½	3.750	1338	2574	½	1.690	1598	2130
⅝	3.875	2070	3424	⅝	1.750	1598	2130
¾	4.500	3097	5239	¾	1.750	1598	2130
Wedge Anchors in 4000 psi (276 bar) Normal Weight Concrete				***Wood Form Inserts in 4000 psi (276 bar) Normal Weight Concrete***			
⅜	2.375	1233	1170	⅜	1.100	1845	1235
½	3.750	1545	2574	½	1.690	1845	2249
⅝	3.875	2390	3900	⅝	1.750	1845	2460
¾	4.500	3391	5239	¾	1.750	1845	2460
Wedge Anchors in 6000 psi (414 bar) Normal Weight Concrete				***Wood Form Inserts in 6000 psi (414 bar) Normal Weight Concrete***			
⅜	2.375	1409	1170	⅜	1.100	2259	1235
½	3.750	1892	2574	½	1.690	2259	2249
⅝	3.875	2928	3900	⅝	1.750	2259	3013
¾	4.500	4153	5239	¾	1.750	2259	3013

E.7.1 Selecting a Wedge Anchor Using Table 18.5.12.2(a) through Table 18.5.12.2(e).

E.7.1.1 Procedure.

Step 1. Determine the ASD horizontal earthquake load F_{pw}.

Step 1a. Calculate the weight of the water-filled pipe within the zone of influence of the brace.

Step 1b. Find the applicable seismic coefficient C_p in Table 18.5.9.3

Step 1c. Multiply the zone of influence weight by C_p to determine the ASD horizontal earthquake load F_{pw}.

EDUFIRE.IR

Step 2. Select a concrete anchor from Table 18.5.12.2(a) through Table 18.5.12.2(e) with a maximum load capacity that is greater than the calculated horizontal earthquake load F_{pw} from Step 1.

Step 2a. Locate the table for the applicable concrete strength.

Step 2b. Find the column in the selected table for the applicable designated angle category (A thru I) and the appropriate prying factor *Pr* range.

Step 2c. Scan down the category column to find a concrete anchor diameter, embedment depth, and maximum load capacity that is greater than the calculated horizontal earthquake load F_{pw} from Step 1.

(ALTERNATIVE) Step 2. As an alternative to using the maximum load values in Table 18.5.12.2(a) through Table 18.5.12.2(e), select a concrete anchor that has been tested in accordance with ACI 355.2, *Qualification of Post-Installed Mechanical Anchors in Concrete and Commentary*, for seismic loading and that has an allowable strength, including the effects of prying, taken as 0.43 times the normal strength determined in accordance with ACI 318, *Building Code Requirements for Structural Concrete and Commentary*, Chapter 17, as per 18.5.12.7.3(D).

E.7.1.2 Example.

Step 1. Zone of influence F_{pw}.

Step 1a. 40 ft of 2½ in. Sch. 10 pipe plus 15% fitting allowance
40 × 5.89 lb/ft × 1.15 = 270.94 lb

Step 1b. Seismic coefficient C_p from Table 18.5.9.3
$C_p = 0.35$

Step 1c. $F_{pw} = 0.35 \times 270.94 = 94.8$ lb

Step 2. Select a concrete anchor from Table 18.5.12.2(a) through Table 18.5.12.2(e).

Step 2a. Use the table for 4000 psi Normal Weight Concrete.

Step 2b. Fastener orientation "A" – assume the manufacturer's prying factor is 3.0 for the fitting. Use the *Pr* range of 2.1–3.5.

Step 2c. Allowable F_{pw} on ⅜ in. dia. with 2.375 in. embedment = 138 lb and is greater than the calculated F_{pw} of 94.8 lb.

E.7.2 Calculation for Maximum Load Capacity of Concrete Anchors. This example shows how the effects of prying and brace angle are calculated when using Table E.7(a).

E.7.2.1 Procedure.

Step 1. Determine the allowable seismic tension value (T_{allow}) and the allowable seismic shear value (V_{allow}) for the anchor, based on data found in the anchor manufacturer's approved evaluation report. Note that, in this example, it is assumed the evaluation report provides the allowable tension and shear capacities. If this is not the case, the strength design anchor capacities must be determined using the procedures in ACI 318, Chapter 17, which are then converted to ASD values by dividing by a factor of 1.4. As an alternative to calculating the allowable seismic tension value (T_{allow}) and the allowable seismic shear value (V_{allow}) for the anchor, the seismic tension and shear values that were used to calculate Figure 18.5.12.1 for anchor allowable load tables can be used.

Step 1a. Find the ASD seismic tension capacity (T_{allow}) for the anchor according to the strength of concrete, diameter of the anchor, and embedment depth of the anchor. Divide the ASD tension value by 2.0 and then multiply by 1.2.

Step 1b. Find the ASD seismic shear capacity (V_{allow}) for the anchor according to the strength of concrete, diameter of the anchor, and embedment depth of the anchor. Divide the ASD shear value by 2.0 and then multiply by 1.2.

EDUFIRE.IR

Step 2. Calculate the applied seismic tension (T) and the applied seismic shear (V) based on the calculated horizontal earthquake load F_{pw}.

Step 2a. Calculate the designated angle category applied tension factor, including the effects of prying (Pr), using the following formulas:

Category A, B, and C

$$Pr = \frac{\left(\frac{C+A}{Tan\,\theta}\right) - D}{A} \qquad \textbf{[E.7.2.1a]}$$

Category D, E, and F

$$Pr = \frac{(C+A) - \left(\frac{D}{Tan\,\theta}\right)}{A} \qquad \textbf{[E.7.2.1b]}$$

Category G, H, and I

$$Pr = \frac{\left(\frac{D}{B}\right)}{Sin\,\theta} \qquad \textbf{[E.7.2.1c]}$$

Step 2b. Calculate the ASD applied seismic tension (T) on the anchor, including the effects of prying, and when applied at the applicable brace angle from vertical and the designated angle category (A through I) using the following formula:

$$T = F_{pw} \times Pr \qquad \textbf{[E.7.2.1d]}$$

Step 2c. Calculate the ASD applied seismic shear (V) on the anchor, when applied at the applicable brace angle from vertical and the designated angle category (A through I) using the following formulas:

Category A, B, and C

$$V = F_{pw} \qquad \textbf{[E.7.2.1e]}$$

Category D, E, and F

$$V = \frac{F_{pw}}{Tan\,\theta} \qquad \textbf{[E.7.2.1f]}$$

Category G, H, and I

$$V = \frac{F_{pw}}{Sin\,\theta} \qquad \textbf{[E.7.2.1g]}$$

Step 3. Check the anchor for combined tension and shear loads using the following formula:

$$\left(\frac{T}{T_{allow}}\right) + \left(\frac{V}{V_{allow}}\right) \leq 1.2 \qquad \textbf{[E.7.2.1h]}$$

Confirm that T/T_{allow} and $V/V_{allow} \leq 1.0$.

E.7.2.2 Example: Sample Calculation, Maximum Load Capacity of Concrete Anchors as Shown in Table 18.5.12.2(a) through Table 18.5.12.2(e). In this example, a sample calculation is provided showing how the values in Table 18.5.12.2(a) through Table 18.5.12.2(e) were calculated.

EDUFIRE.IR

Step 1. Determine the allowable seismic tension value (T_{allow}) and the allowable seismic shear value (V_{allow}) for a concrete anchor in Figure 18.5.12.1.

Step 1a. The Table E.7(b) strength design seismic tension value (T_{allow}) for a ½ in. carbon steel anchor with 3¾ in. embedment depth in 4000 psi normal weight concrete is 1545 lb. Therefore, the allowable stress design seismic tension value (T_{allow}) is 1545/1.4/2.0 × 1.2 = 662 lb.

Step 1b. The Table E.7(b) strength design seismic shear value (V_{allow}) for a ½ in. carbon steel anchor with 3¾ in. embedment is 2574 lb. Therefore, the allowable stress design seismic shear value (V_{allow}) is 2574/1.4/2.0 × 1.2 = 1103 lb.

Step 2. Use the applied seismic tension value (T) and the applied seismic shear value (V) based on an ASD horizontal earthquake load (F_{pw}) of 100 lb, a 30-degree brace angle from vertical, and designated angle category A.

Step 2a. Calculate the ASD applied seismic tension value (T) on the anchor, including the effects of prying, using the following formula and Figure E.7.2.2.

$$T = \frac{F_{pw}\left[\left(\frac{C+A}{Tan\,\theta}\right) - D\right]}{A} \qquad \textbf{[E.7.2.2a]}$$

where:

T = applied service tension load, including the effect of prying
F_{pw} = horizontal earthquake load (F_{pw} = 170)
Tan = tangent of brace angle from vertical ($Tan\theta$ 0°= 0.5774)
A = 0.7500
B = 1.5000
C = 2.6250
$T = F_{pw} \times Pr$

$$T = \frac{\left\{F_{pw}\left[\left(\frac{2.625+0.75}{0.5774}\right) - 1.0\right]\right\}}{0.75}$$

$$T = \frac{[F_{pw}(5.8452 - 1.0)]}{0.75}$$

$$T = F_{pw}\left(\frac{4.8451}{0.75}\right)$$

$T = F_{pw} \times 6.46$
T = 100 lb × 6.46 = 646 lb

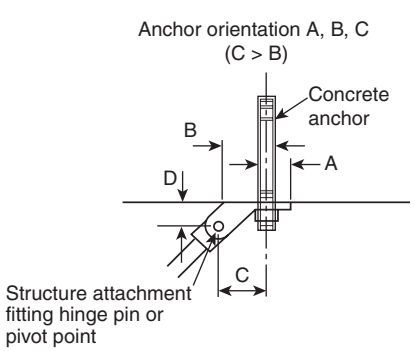

FIGURE E.7.2.2 *Concrete Anchor for Sample Calculation in E.7.2.2.*

EDUFIRE.IR

Step 2b. The ASD applied seismic shear value (V) on the anchor for anchor orientations A, B, and C is equal to the ASD horizontal earthquake load F_{pw} = 100 lb.

Step 3. Calculate the maximum allowable horizontal earthquake load F_{pw} using the formula:

$$\left(\frac{T}{T_{allow}}\right)+\left(\frac{V}{V_{allow}}\right)\leq 1.2 \qquad \textbf{[E.7.2.2b]}$$

$$\left(\frac{646}{662}\right)+\left(\frac{100}{1103}\right)=1.0665(\leq 1.2)$$

EDUFIRE.IR

ANNEX

F

Informational References

It is important to note that the codes and standards listed in Annex F have a nonmandatory reference to them somewhere within Annexes A through E. This list is not intended to be a stand-alone list and is not intended to allow or encourage public input to add to this list unless a nonmandatory reference to another code or standard is made in one of the annexes of this standard.

F.1 Referenced Publications.

The documents or portions thereof listed in this annex are referenced within the informational sections of this standard and are not part of the requirements of this document unless also listed in Chapter 2 for other reasons.

F.1.1 NFPA Publications. National Fire Protection Association, 1 Batterymarch Park, Quincy, MA 02169-7471.

NFPA 1, *Fire Code*, 2018 edition.
NFPA 11, *Standard for Low-, Medium-, and High-Expansion Foam*, 2016 edition.
NFPA 12, *Standard on Carbon Dioxide Extinguishing Systems*, 2018 edition.
NFPA 13D, *Standard for the Installation of Sprinkler Systems in One- and Two-Family Dwellings and Manufactured Homes*, 2019 edition.
NFPA 13R, *Standard for the Installation of Sprinkler Systems in Low-Rise Residential Occupancies*, 2019 edition.
NFPA 14, *Standard for the Installation of Standpipe and Hose Systems*, 2016 edition.
NFPA 15, *Standard for Water Spray Fixed Systems for Fire Protection*, 2017 edition.
NFPA 16, *Standard for the Installation of Foam-Water Sprinkler and Foam-Water Spray Systems*, 2015 edition.
NFPA 20, *Standard for the Installation of Stationary Pumps for Fire Protection*, 2019 edition.
NFPA 22, *Standard for Water Tanks for Private Fire Protection*, 2018 edition.
NFPA 25, *Standard for the Inspection, Testing, and Maintenance of Water-Based Fire Protection Systems*, 2017 edition.
NFPA 33, *Standard for Spray Application Using Flammable or Combustible Materials*, 2018 edition.
NFPA 70®, *National Electrical Code®*, 2017 edition.
NFPA 72®, *National Fire Alarm and Signaling Code*, 2019 edition.
NFPA 75, *Standard for the Fire Protection of Information Technology Equipment*, 2017 edition.
NFPA 80A, *Recommended Practice for Protection of Buildings from Exterior Fire Exposures*, 2017 edition.
NFPA *101®*, *Life Safety Code®*, 2018 edition.
NFPA 120, *Standard for Fire Prevention and Control in Coal Mines*, 2015 edition.

EDUFIRE.IR

NFPA 140, *Standard on Motion Picture and Television Production Studio Soundstages, Approved Production Facilities, and Production Locations*, 2018 edition.
NFPA 170, *Standard for Fire Safety and Emergency Symbols*, 2018 edition.
NFPA 204, *Standard for Smoke and Heat Venting*, 2018 edition.
NFPA 220, *Standard on Types of Building Construction*, 2018 edition.
NFPA 232, *Standard for the Protection of Records*, 2017 edition.
NFPA 259, *Standard Test Method for Potential Heat of Building Materials*, 2018 edition.
NFPA 291, *Recommended Practice for Fire Flow Testing and Marking of Hydrants*, 2019 edition.
NFPA 307, *Standard for the Construction and Fire Protection of Marine Terminals, Piers, and Wharves*, 2016 edition.
NFPA 409, *Standard on Aircraft Hangars*, 2016 edition.
NFPA 750, *Standard on Water Mist Fire Protection Systems*, 2019 edition.
NFPA 780, *Standard for the Installation of Lightning Protection Systems*, 2017 edition.
NFPA 2001, *Standard on Clean Agent Fire Extinguishing Systems*, 2018 edition.
NFPA Fire Protection Handbook, 20th edition.

F.1.2 Other Publications.

F.1.2.1 ACI Publications. American Concrete Institute, 38800 Country Club Drive, Farmington Hills, MI 48331-3439.

ACI 318, *Building Code Requirements for Structural Concrete and Commentary*, 2014.
ACI 355.2, *Qualification of Post-Installed Mechanical Anchors in Concrete and Commentary*, 2007.

F.1.2.2 ACPA Publications. American Concrete Pipe Association, 8445 Freeport Pkwy, Suite 350, Irving, TX 75063.

Concrete Pipe Handbook.

F.1.2.3 AISC Publications. American Institute of Steel Construction, One East Wacker Drive, Suite 700, Chicago, IL 60601-1802.

AISC 360, *Specification for Structural Steel Buildings,* 2010, Errata, 2012.
Specifications for the Design, Fabrication, and Erection of Structural Steel Buildings.

F.1.2.4 ASCE Publications. American Society of Civil Engineers, 1801 Alexander Bell Drive, Reston, VA 20191-4400.

ASCE/SEI 7, *Minimum Design Loads for Buildings and Other Structures,* 2010.
ASCE 19, *Standard Guidelines for the Structural Applications of Steel Cables for Buildings*, 2010.

F.1.2.5 ASME Publications. ASME International, Two Park Avenue, New York, NY 10016-5990.

ASME A17.1, *Safety Code for Elevators and Escalators*, 1996.
ASME B16.1, *Gray-Iron Pipe Flanges and Flanged Fittings Classes 25, 125, and 250*, 2015.
ASME B1.20.1, *Pipe Threads, General Purpose (Inch)*, 2013.

F.1.2.6 ASTM Publications. ASTM International, 100 Barr Harbor Drive, P.O. Box C700, West Conshohocken, PA 19428-2959.

ASTM A126, *Standard Specification for Gray Iron Castings for Valves, Flanges, and Pipe Fittings*, 2004, reapproved 2014.
ASTM A135/A135M, *Standard Specification for Electric-Resistance-Welded Steel Pipe*, 2009, reapproved 2014.

EDUFIRE.IR

ASTM A197/A197M, *Standard Specification for Cupola Malleable Iron*, 2000, reapproved 2015.
ASTM A307, *Standard Specification for Carbon Steel Bolts, Studs, Threaded Rod 60,000 psi Tensile Strength*, 2014.
ASTM A1023/A1023M, *Standard Specification for Stranded Carbon Steel Wire Ropes for General Purposes*, 2015.
ASTM A603, *Standard Specification for Zinc-Coated Steel Structural Wire Rope*, reapproved 2014.
ASTM B31, *Standards of Pressure Piping*, collection with various dates.
ASTM C136/C136M, *Standard Test Method for Sieve Analysis of Fine and Coarse Aggregates*, 2014.
ASTM C635/C635M, *Standard Specification for the Manufacture, Performance, and Testing of Metal Suspension Systems of Acoustical Tile and Lay-In Panel Ceilings*, 2013a.
ASTM C636/C636M, *Standard Practice for Installation of Metal Ceiling Suspension Systems for Acoustical Tile and Lay-In Panels*, 2013.
ASTM D2487, *Standard Practice for Classification of Soils for Engineering Purposes (Unified Soil Classification System)*, 2011.
ASTM E8/E8M, *Structural Test Method for Tension Testing of Metallic Materials*, 2015a.
ASTM E84, *Standard Test Method of Surface Burning Characteristics of Building Materials*, 2004.
ASTM E119, *Standard Test Methods for Fire Tests of Building Construction and Materials*, 2016a.
ASTM E580/E580M, *Standard Practice for Installation of Ceiling Suspension Systems for Acoustical Tile and Lay-in Panels in Areas Subject to Earthquake Ground Motions*, 2014.
ASTM F437, *Standard Specification for Threaded Chlorinated Poly (Vinyl Chloride) (CPVC) Plastic Pipe Fittings, Schedule 80*, 2015.
ASTM F438, *Standard Specification for Socket-Type Chlorinated Poly (Vinyl Chloride) (CPVC) Plastic Pipe Fittings, Schedule 40*, 2015.
ASTM F439, *Standard Specification for Socket-Type Chlorinated Poly (Vinyl Chloride) (CPVC) Plastic Pipe Fittings, Schedule 80*, 2013.
ASTM F442/F442M, *Standard Specification for Chlorinated Poly (Vinyl Chloride) (CPVC) Plastic Pipe (SDR-PR)*, 2013.
ASTM F2164, *Standard Practice for Field Leak Testing of Polyethylene (PE) and Crosslinked Polyethylene (PEX) Pressure Piping Systems Using Hydrostatic Pressure*, 2013.

F.1.2.7 AWWA Publications. American Water Works Association, 6666 West Quincy Avenue, Denver, CO 80235.

AWWA C105/A21.5, *Polyethylene Encasement for Ductile-Iron Pipe Systems*, 2015.
AWWA C111/A21.11, *Rubber-Gasket Joints for Ductile-Iron Pressure Pipe and Fittings*, 2012.
AWWA C115/A21.15, *Flanged Ductile-Iron Pipe with Ductile-Iron or Gray-Iron Threaded Flanges*, 2011.
AWWA C150/A21.50, *Thickness Design of Ductile-Iron Pipe*, 2014.
AWWA C206, *Field Welding of Steel Water Pipe*, 2011.
AWWA C600, *Standard for the Installation of Ductile-Iron Water Mains and Their Appurtenances*, 2010.
AWWA C602, *Cement-Mortar Lining of Water Pipe Lines 4 in. (100 mm) and Larger*, 2011.
AWWA C606, *Grooved and Shouldered Joints*, 2015.
AWWA C900, *Polyvinyl Chloride (PVC) Pressure Pipe, 4 in. Through 12 in. (100 mm Through 300 mm), for Water Transmission and Distribution*, 2007, Errata, 2008.
AWWA C905, *Polyvinyl Chloride (PVC) Pressure Pipe and Fabricated Fittings, 14 in. Through 48 in. (350 mm through 1,200 mm), for Water Transmission and Distribution*, 1998.

EDUFIRE.IR

AWWA C906, *Polyethylene (PE) Pressure Pipe and Fittings, 4 in. Through 65 in. (100 mm Through 1,600 mm), for Waterworks*, 2015.
AWWA M9, *Concrete Pressure Pipe*, 2008, Errata, 2013.
AWWA M11, *Steel Pipe — A Guide for Design and Installation*, 2004, Errata, 2013.
AWWA M14, *Backflow Prevention and Cross-Connection Control*, Recommended Practices, 2015.
AWWA M23, *PVC Pipe — Design and Installation*, 2002.
AWWA M41, *Ductile-Iron Pipe and Fittings*, 2009.
AWWA M55, *PE Pipe — Design and Installation*, 2006.

F.1.2.8 DIPRA Publications. Ductile Iron Pipe Research Association, P.O. Box 19206, Golden, CO 80402.

Thrust Restraint Design for Ductile-Iron Pipe, 2016.

F.1.2.9 EPRI Publications. EPRI, 3420 Hillview Avenue, Palo Alto, CA 94304.

Research Report 1843-2, "Turbine Generator Fire Protection by Sprinkler System," July 1985.

F.1.2.10 FM Publications. FM Global, 270 Central Avenue, P.O. Box 7500, Johnston, RI 02919-4923.

Flammability Characterization of Lithium-ion Batteries in Bulk Storage, 2013.
FM Approval 1011-1012-1013, *Deluge and Preaction Sprinkler Systems*, 2009.
FM Approval 1020, *Automatic Water Control Valves*, 2007.
FM Approval 1021, *Dry Pipe Valves*, 1973.
FM Approval 1031, *Quick Opening Devices (Accelerators and Exhausters) for Dry Pipe Valves*, 1977.
FM Approval 1041, *Alarm Check Valves*, 2006.
FM Approval 1042, *Waterflow Alarm Indicators (Vane Type)*, 1970.
FM Approval 1045, *Waterflow Detector Check Valves*, 2005.
FM Approval 1112, *Indicating Valves (Butterfly or Ball Type)*, 2006.
FM Approval 1120-1130, *Fire Service Water Control Valves (OS & Y and NRS Type Gate Valves)*, 1997.
FM Approval 1140, *Quick Opening Valves ¼ Inch Through 2 Inch Nominal Size*, 1998.
FM Approval 1210, *Swing Check Valves*, 2004.
FM Approval 1362, *Pressure Reducing Valves*, 1984.
FM Approval 1610, *Ductile Iron Pipe and Fittings, Flexible Fittings and Couplings*, 2006.
FM Approval 1612, *Polyvinyl Chloride (PVC) Pipe and Fittings for Underground Fire Protection Service*, 1999.
FM Approval 1613, *Polyethylene (PE) Pipe and Fittings for Underground Fire Protection Service*, 2006.
FM Approval 1620, *Pipe Joints and Anchor Fittings for Underground Fire Service Mains*, 1975.
FM Approval 1630, *Steel Pipe for Automatic Fire Sprinkler Systems*, 2013.
FM Approval 1631, *Adjustable and Fixed Sprinkler Fittings ½ inch through 1 inch Nominal Size*, 2006.
FM Approval 1632, *Telescoping Sprinkler Assemblies for Use in Fire Protection Systems for Anechoic Chambers*, 2006.
FM Approval 1635, *Plastic Pipe & Fittings for Automatic Sprinkler Systems*, 2011.
FM Approval 1636, *Fire Resistant Barriers for Use with CPVC Pipe and Fittings in Light Hazard Occupancies*, 2003.
FM Approval 1637, *Flexible Sprinkler Hose with Fittings*, 2010.
FM Approval 1920, *Pipe Couplings and Fittings for Fire Protection Systems*, 2007.
FM Approval 1950, *Seismic Sway Brace Components for Automatic Sprinkler Systems*, 2010.

EDUFIRE.IR

FM Approval 1951-1952-1953, *Pipe Hanger Components for Automatic Sprinkler Systems*, 2003.
FM Approval 2000, *Automatic Control Mode Sprinklers for Fire Protection*, 2006.
FM Approval 2008, *Suppression Mode ESFR Automatic Sprinklers*, 2006.
FM Approval 2030, *Residential Automatic Sprinklers*, 2009.
FM Class Number 4651, *Plastic Suspended Ceiling Panels*, 1978.
FM Loss Prevention Data Sheet 8-9, Storage of Class 1, 2, 3, 4 and Plastic Commodities.

F.1.2.11 FMRC Publications. FM Global Research, FM Global, 270 Central Avenue, P.O. Box 7500, Johnston, RI 02919-4923.

FMRC J. I. 0X1R0.RR, "Large-Scale Fire Tests of Rack Storage Group A Plastics in Retail Operation Scenarios Protected by Extra Large Orifice (ELO) Sprinklers."

F.1.2.12 FPRF Publications. Fire Protection Research Foundation, 1 Batterymarch Park, Quincy, MA 02169.

Antifreeze Solutions Supplied through Spray Sprinklers – Interim Report, February 2012.
Antifreeze Systems in Home Fire Sprinkler Systems — Literature Review and Research Plan, June 2010.
Antifreeze Systems in Home Fire Sprinkler Systems – Phase II Final Report, December 2010.
High Volume/Low Speed Fan and Sprinkler Operation — Ph. 2 Final Report, 2011.
Large-Scale Fire Test Evaluation of Early Suppression Fast-Response (ESFR) Automatic Sprinklers, 1986.
Lithium Ion Batteries Hazard and Use Assessment, 2011.
Lithium Ion Batteries Hazard and Use Assessment Phase IIB, Flammability Characterization of Li-ion Batteries for Storage Protection, 2013.
Lithium Ion Batteries Hazard and Use Assessment — Phase III, 2016.
Protection of Rack Stored Exposed Expanded Group A Plastics with ESFR Sprinklers and Vertical Barriers, 2014.
Sprinkler Protection Criteria for Lithium Ion Batteries Stored in Cartons, 2016.

F.1.2.13 ICC Publications. International Code Council, 500 New Jersey Avenue, NW, 6th Floor, Washington, DC 20001.

AC 193, *Acceptance Criteria for Mechanical Anchors in Concrete Elements*, 2015.
AC308, *Post-installed Adhesive Anchors in Concrete Elements*, 2016.
Uniform Building Code, 1997.

F.1.2.14 IMO Publications. International Maritime Organization, 4 Albert Embankment, London, SEI 7SR, United Kingdom.

International Convention for the Safety of Life at Sea, 1974 (SOLAS 74), as amended, regulations II-2/3 and II-2/26.

F.1.2.15 ISO Publications. International Organization for Standardization, ISO Central Secretariat, BIBC II, Chemin de Blandonnet, 8, CP 401, 1214 Vernier, Geneva Switzerland.

ISO 6182-1, *Fire protection — Automatic sprinkler systems — Part 1: Requirements and test methods for sprinklers*, 2014.

F.1.2.16 NFSA Publications. National Fire Sprinkler Association, 40 Jon Barrett Road, Patterson, NY 12563.

Valentine and Isman, *Kitchen Cabinets and Residential Sprinklers,* November 2005.

F.1.2.17 SNAME Publications. Society of Naval Architects and Marine Engineers, 99 Canal Center Plaza, Suite 310, Alexandria, VA 22314.

Technical Research Bulletin 2-21, "Aluminum Fire Protection Guidelines."

EDUFIRE.IR

F.1.2.18 UL Publications. Underwriters Laboratories Inc., 333 Pfingsten Road, Northbrook, IL 60062-2096.

Commodity Hazard Comparison of Expanded Plastic in Portable Bins and Racking, Project 99NK29106, NC4004, September 8, 2000.

Fact Finding Report on Automatic Sprinkler Protection for Fur Storage Vaults, November 25, 1947.

Technical Report of Fire Testing of Automotive Parts in Portable Storage Racking, Project 99NK29106, NC4004, January 5, 2001.

UL 193, *Alarm Valves for Fire-Protection Service*, 2016.

UL 194, *Gasketed Joints for Ductile-Iron Pipe and Fittings for Fire Protection Service*, 2005.

UL 199, *Automatic Sprinklers for Fire-Protection Service*, 2005, revised 2013.

UL 203, *Pipe Hanger Equipment for Fire-Protection Service*, 2015.

UL 203A, *Standard for Sway Brace Devices for Sprinkler System Piping*, 2015.

UL 213, *Rubber Gasketed Fittings for Fire-Protection Service*, 2009, revised 2015.

UL 260, *Dry Pipe and Deluge Valves for Fire Protection Service*, 2004, revised 2013.

UL 262, *Gate Valves for Fire-Protection Service*, 2004, revised 2015.

UL 312, *Check Valves for Fire Protection Service*, 2015.

UL 346, *Waterflow Indicators for Fire Protective Signaling Systems*, 2005.

UL 852, *Metallic Sprinkler Pipe for Fire Protection Service*, 2008, revised 2014.

UL 1091, *Butterfly Valves for Fire Protection Service*, 2004, revised 2010.

UL 1285, *Standard for Pipe and Couplings, Polyvinyl Chloride (PVC), Oriented Polyvinyl Chloride (PVCO) for Underground Fire Service*, 2016.

UL 1468, *Direct Acting Pressure Reducing and Pressure Restricting Valves*, 2016.

UL 1474, *Adjustable Drop Nipples for Sprinkler Systems*, 2004.

UL 1486, *Quick Opening Devices (Accelerators and Exhausters) for Dry Pipe Valves*, 2004.

UL 1626, *Residential Sprinklers for Fire Protection Service*, 2012.

UL 1739, *Pilot-Operated Pressure-Control Valves for Fire Protection Service*, 2012, revised 2013.

UL 1767, *Early-Suppression Fast-Response Sprinklers*, 2015.

UL 1821, *Thermoplastic Sprinkler Pipe and Fittings for Fire Protection Service*, 2015.

UL 2443, *Flexible Sprinkler Hose with Fittings for Fire Protection Service*, 2015.

UL Subject 723S, *Outline of Investigation for Drop-Out Ceilings Installed Beneath Automatic Sprinklers*, 2006.

F.1.2.19 U.S. Government Publications. U.S. Government Publishing Office, 732 North Capitol Street, NW, Washington, DC 20401-0001.

Title 46, Code of Federal Regulations, Part 72.05-5, "Definitions."

F.1.2.20 Other Publications. *The Health and Safety Implications of the Use of Diesel-Powered Equipment in Underground Mines,* MSHA, 1985.

Thrust Restraint Design Equations and Tables for Ductile-Iron and PVC Pipe, EBAA Iron, Inc.

Wire Rope User's Manual, 2005, Wire Rope Technical Board, Alexandria, VA 22315-1387.

F.2 Informational References.

The following documents or portions thereof are listed here as informational resources only. They are not a part of the requirements of this document.

EDUFIRE.IR

F.2.1 NFPA Publications. National Fire Protection Association, 1 Batterymarch Park, Quincy, MA 02169-7471.

NFPA 13E, *Recommended Practice for Fire Department Operations in Properties Protected by Sprinkler and Standpipe Systems*, 2015 edition.
NFPA 33, *Standard for Spray Application Using Flammable or Combustible Materials*, 2018 edition.
NFPA 850, *Recommended Practice for Fire Protection for Electric Generating Plants and High Voltage Direct Current Converter Stations*, 2018 edition.

F.2.2 AWWA Publications. American Water Works Association, 6666 West Quincy Avenue, Denver, CO 80235.

AWWA C104/A21.4, *Cement-Mortar Lining for Ductile-Iron Pipe and Fittings*, 2013.
AWWA C110/A21.10, *Ductile-Iron and Gray-Iron Fittings*, 2012.
AWWA C116/A21.16, *Protective Fusion-Bonded Epoxy Coatings for the Interior and Exterior Surfaces of Ductile-Iron and Gray Iron Fittings for Water Supply Service*, 2009, Erratum, 2010.
AWWA C151/A21.51, *Ductile-Iron Pipe, Centrifugally Cast*, 2009.
AWWA C153/A21.53, *Ductile-Iron Compact Fittings*, 2011.
AWWA C203, *Coal-Tar Protective Coatings and Linings for Steel Water Pipe*, 2015.
AWWA C205, *Cement-Mortar Protective Lining and Coating for Steel Water Pipe 4 in. (100 mm) and Larger — Shop Applied*, 2012.
AWWA C208, *Dimensions for Fabricated Steel Water Pipe Fittings*, 2012.
AWWA C300, *Reinforced Concrete Pressure Pipe, Steel-Cylinder Type*, 2011.
AWWA C301, *Prestressed Concrete Pressure Pipe, Steel-Cylinder Type*, 2014.
AWWA C302, *Reinforced Concrete Pressure Pipe, Non-Cylinder Type*, 2011.
AWWA C303, *Reinforced Concrete Pressure Pipe, Bar-Wrapped, Steel-Cylinder Type, Pretensioned*, 2008.

F.2.3 DIPRA Publications. Ductile Iron Pipe Research Association, P.O. Box 19206, Golden, CO 80402.

Installation Guide for Ductile Iron Pipe, 2016.

F.2.4 FM Publications. FM Global, 270 Central Avenue, P.O. Box 7500, Johnston, RI 02919-4923.

FM Approval 2311, *Pressure Gauges for Fire Protection Systems*, 2008.

F.2.5 SAE Publications. SAE International, 400 Commonwealth Dr., Warrendale, PA 15096.

SAE AIR 4127, *Steel: Chemical Composition and Hardenability (Stabilized Type), Revision A, Stabilized*, December 2015.

F.2.6 Uni-Bell PVC Pipe Publications. Uni-Bell PVC Pipe Association, 2711 Lyndon B Johnson Fwy., Suite 1000, Dallas, TX 75234.

Handbook of PVC Pipe, 5th edition.

F.2.7 U.S. Government Publications. U.S. Government Publishing Office, 732 North Capitol Street, NW, Washington, DC 20401-0001.

U.S. Federal Standard No. 66C, *Standard for Steel Chemical Composition and Harden Ability*, April 18, 1967, change notice No. 2, April 16, 1970. (Superseded by SAE AIR4127)

EDUFIRE.IR

F.3 References for Extracts in Informational Sections.

NFPA 14, *Standard for the Installation of Standpipe and Hose Systems*, 2016 edition.

NFPA 24, *Standard for the Installation of Private Fire Service Mains and Their Appurtenances*, 2019 edition.

NFPA 33, *Standard for Spray Application Using Flammable or Combustible Materials*, 2018 edition.

NFPA 36, *Standard for Solvent Extraction Plants*, 2017 edition.

NFPA 37, *Standard for the Installation and Use of Stationary Combustion Engines and Gas Turbines*, 2018 edition.

NFPA 40, *Standard for the Storage and Handling of Cellulose Nitrate Film*, 2019 edition.

NFPA 75, *Standard for the Fire Protection of Information Technology Equipment*, 2017 edition.

NFPA 82, *Standard on Incinerators and Waste and Linen Handling Systems and Equipment*, 2014 edition.

NFPA 86, *Standard for Ovens and Furnaces*, 2019 edition.

NFPA 99, *Health Care Facilities Code*, 2018 edition.

NFPA 99B, *Standard for Hypobaric Facilities*, 2018 edition.

NFPA *101*®, *Life Safety Code*®, 2018 edition.

NFPA 120, *Standard for Fire Prevention and Control in Coal Mines*, 2015 edition.

NFPA 122, *Standard for Fire Prevention and Control in Metal/Nonmetal Mining and Metal Mineral Processing Facilities*, 2015 edition.

NFPA 140, *Standard on Motion Picture and Television Production Studio Soundstages, Approved Production Facilities, and Production Locations*, 2018 edition.

NFPA 214, *Standard on Water-Cooling Towers*, 2016 edition.

NFPA 307, *Standard for the Construction and Fire Protection of Marine Terminals, Piers, and Wharves*, 2016 edition.

NFPA 318, *Standard for the Protection of Semiconductor Fabrication Facilities*, 2018 edition.

NFPA 415, *Standard on Airport Terminal Buildings, Fueling Ramp Drainage, and Loading Walkways*, 2016 edition.

NFPA 423, *Standard for Construction and Protection of Aircraft Engine Test Facilities*, 2016 edition.

NFPA 804, *Standard for Fire Protection for Advanced Light Water Reactor Electric Generating Plants*, 2015 edition.

NFPA 909, *Code for the Protection of Cultural Resource Properties — Museums, Libraries, and Places of Worship*, 2017 edition.

NFPA 5000®, *Building Construction and Safety Code*®, 2018 edition.

EDUFIRE.IR

Index

A

Acceptance, system, Chap. 28
Approval of system, 28.1
Automated inspection and testing, 28.3
Definition, 3.3.9
General information sign, 28.6, A.28.6
Hydraulic design information sign, 28.5, A.28.5
Instructions, 28.4, A.28.4(2)
Marine systems, 30.8
Requirements, 28.2, A.28.2.1 to A.28.2.3.4.2
Underground pipe, 6.10, A.6.10.2.1 to A.6.10.2.3
Acetylene cylinder charging plants, 26.10
A-class boundary, 30.4.5.1, 30.4.10.1(1), 30.4.10.3
Definition, 3.3.119.1
Additives, 4.7, 28.2.1.6, 30.4.11.3, A.4.7, A.28.2.1.6
Antifreeze solutions, 8.6.2, A.8.6.2
Corrosion control, 29.1.8
Water supply, 7.8.1
Adjacent hazards, 19.2.2, 20.10.1, A.19.2.2
Aerosol products, protection of, 26.3
Air compressors, 8.2.6.3 to 8.2.6.7, A.8.2.6.3 to A.8.2.6.6.1, see also Compressed air
Air conveying of vapors, gases, mists, and noncombustible particulate solids, 26.32
Aircraft engine test facilities, 26.26, A.26.26.1.1
Aircraft hangars, 26.24
Airport terminal buildings, fueling ramp drainage, and loading walkways, 26.25, A.26.25.1.2
Air pressure
Leakage tests, 28.2.1.4, 28.2.2, 29.7.2
Marine systems, 30.4.12.2
Pressure tanks, 5.2.4.3, A.5.2.4.3
Refrigerated spaces, 8.8.2.2
System, 8.2.1, 8.2.6, A.8.2.6.3 to A.8.2.6.8.4
Air receivers, 8.2.1(3), 8.2.6.6.1, A.8.2.6.6.1
Definition, 3.3.2
Air reservoirs, 8.1.2.2
Definition, 3.3.3
Air supply
Automatic air maintenance, 8.2.6.6, A.8.2.6.6.1
Dry pipe system, 8.2.1, 8.2.6, A.8.2.6.3 to A.8.2.6.8.4
Marine systems, 30.7.2.4.1
Other gases substituted for, 4.8
Refrigerated spaces, 8.8.2.2, 8.8.2.4, 8.8.2.7, A.8.8.2.4, A.8.8.2.7.1
Air venting, 8.1.5, 16.7, A.16.7
Aisle widths
Carton records storage, 21.11.3.1, 21.11.3.2
Class I through Class IV commodities, rack storage of, 21.4.1.2, 21.4.1.3.1, 21.4.1.3.2, 21.8.1.2(7), 23.13.2(7), 25.2.3.2.1.1, 25.2.3.2.2, 25.2.3.3.1, 25.2.3.3.2, A.21.4.1.2.1, A.25.2.3.2.1.1, A.25.2.3.3.1, C.15
Definition, 3.3.4, A.3.3.4
Draft curtain, centered below, 23.1.2.2
Plastics commodities, rack storage of, 23.7.7, 23.13.2(7), 25.9.4.1.3.2, 25.9.4.2.2, A.25.9.4.2.2
Retail stores, display/storage of commodities and plastics at, 21.9.1(10), 21.9.1(13), 21.9.2(5), 21.9.3(7), 21.9.4(6), 21.9.5(6), 21.9.6(7), 23.11.1(10), 23.11.1(13)
Alarms, see also Waterflow alarms/detection devices
Abandoned in place, 29.2.2
Attachments, 30.4.12.7
Electrically operated, 16.11.7, A.16.11.7
Mechanically operated, 16.11.8, A.16.11.8
Coal mines, 26.34.2.2.1
High water level device, dry pipe systems, 8.2.5.4
Hypobaric facilities, 26.33.1.3(1)
Low air pressure, refrigerated spaces, 8.8.2.2
Marine systems, 30.4.12, A.30.4.12.1
Sprinkler, 16.11.1, 16.11.2, A.16.11.1.1, A.16.11.1.2, A.16.11.2, C.4
Alarm valves, 16.9.5.5, 16.9.6.4, 16.11.3.2.1, 16.11.3.2.2, 16.11.5.1, 16.11.5.2, 27.2.3.3, A.16.9.5.5
Allowable stress design (ASD), 18.5.9.4, A.18.5.1.3, A.18.5.9.4, A.18.5.11.9, A.18.5.12, A.18.5.12.7.3(D), E.3, E.4, E.7.2.2
Alternative sprinkler system designs, Chap. 24
Earthquake protection, 18.1.2, 18.5.12.2, 18.7.1.1, A.18.5.12.2
Hangers, 17.1.2, 18.7.1.1, A.17.1
Hose stream allowance and water supply duration, Table 20.12.2.6, 24.4
Minimum obstruction construction, 24.5
Palletized, solid-piled, bin box, shelf, or back-to-back shelf storage, 24.2, A.24.2
Pipe stands, 17.5.1.2
Plastics storage, see Plastics storage
Rack storage
In-rack sprinklers, 25.8, A.25.8.2.11.1
Open-frame storage, 24.3, A.24.3
Anchors, 17.2.2, 17.5.4.3, A.17.2.2, A.17.5.4.3, see also Post-installed anchors
Concrete, for seismic applications, Tables 18.5.12.2(a) to 18.5.12.2(e), 18.5.12.7, 18.7.8, A.18.5.12, A.18.5.12.7.1, A.18.5.12.7.3(D), A.18.7.8, E.7
Wedge, maximum load for, Tables 18.5.12.2(a) to 18.5.12.2(e), A.18.5.12
Animal housing facilities, 26.20
Antiflooding devices, 8.2.4.8
Antifreeze systems, 8.6, 8.8.2.8.1.2, 16.4.1.2, 27.1.3(44), 27.2.4.8.2, A.8.6, A.27.2.4.8.2
Definition, 3.3.206.1
Premixed antifreeze solution, 8.6.2, A.8.6.2
Definition, 3.3.160
Apartment buildings, D.1.1.6, D.1.1.7, D.2.19, D.2.20
Appliances, see Housing materials
Application of standard, 1.3
Approved/approval
Definition, 3.2.1, A.3.2.1
System, 28.1
Underground pipe, 6.10.1
Appurtenances (definition), 3.3.6
Area, of protection, see System protection area
Area/density method, see Density/area method

EDUFIRE.IR

Arm-over, 17.4.3.5, 18.6.7, 27.4.3(16), 29.4.6, 29.5.4, Fig. A.17.4.3.4.4(b), A.17.4.3.5
Definition, 3.3.7
Arrays
Closed, 21.3.2, 21.3.3.1(3), Table 23.10, A.21.3.2
Definition, 3.3.8.1
Open, 21.3.2, A.21.3.2
Definition, 3.3.8.3, A.3.3.8.3
Arrays (paper)
Closed, 20.5.5.3, Table 21.7.3(a), Table 21.7.3(b), Table 22.7
Definition, 3.3.8.2
Open, Table 21.7.3(a), Table 21.7.3(b), Table 22.7
Definition, 3.3.8.4
Standard, Table 21.7.3(a), Table 21.7.3(b), Table 22.7
Definition, 3.3.8.5, A.3.3.8.5
ASCE/SEI 7, design approach to conform to, Annex E
Assembly occupancies, D.2.3, D.2.4
Atriums, D.1.1.1.1, D.2.1.2.1
Attachments
Alarms, 16.11, 30.4.12.7, A.16.11.1.1 to A.16.11.10
System, 16.11, A.16.11.1.1 to A.16.11.10, C.4, C.5
Attics, 9.4.2.5(5), 19.4.1.5
Authority having jurisdiction (definition), 3.2.2, A.3.2.2
Automated inspection and testing, 28.3
Definition, 3.3.9
Automated valves, 16.9.4
Automatic air compressor, 8.2.6.6, A.8.2.6.6.1
Automatic sprinklers (definition), 3.3.205.1, see also Sprinklers
Automatic sprinkler systems, see Sprinkler systems
Automotive components on portable racks, 20.4.11, 20.5.6, 23.10, A.20.4.11
Definition, 3.3.11
Auxiliary drains, see Drains
Auxiliary systems, 8.1.3

B

Backflow prevention devices, 8.6.3.1, 8.6.3.2, 8.6.3.3, 16.9.3.3.5, 16.9.5.2, 16.14.5, 19.3.2.6.2, A.8.6.3.2, A.8.6.3.3, A.16.4.5
Acceptance requirements, 6.10.2.5, 28.2.5
Retroactive installation, 29.1.3, 29.6.5
Back-to-back shelf storage, Table 4.3.1.7.1, 21.2, 21.3, 23.12.3(1), A.21.2, A.21.3.2 to A.21.3.3.2
Definition, 3.3.12, A.3.3.12
Baffles, 10.2.5.4.2, 10.3.4.4, 11.2.3.4.2, 11.3.4.4, 12.1.7.3, 12.1.7.4, 12.1.7.6
Balconies, D.2.3.1.1(1), D.2.4.1.1(1)
Baled cotton
Definition, 3.3.13, A.3.3.13
Storage, 20.4.12.1
Control mode density/area (CMDA) sprinklers, 21.10, A.21.10
Existing system modifications, 29.1.5, 29.6.2(3), 29.6.7
Temperature rating of sprinklers, 9.4.2.7, A.9.4.2.7
Water supplies, 20.12.2.7
Tiered storage, Table 21.10.1
Definition, 3.3.219, A.3.3.219
Banded roll paper storage, Table 22.7.3(a), Table 22.7.3(b)
Definition, 3.3.182.1
Banded tires, Fig. A.3.3.185(e), Fig. A.3.3.185(f)
Definition, 3.3.15
Bar joist construction, 9.2.1.4, 9.2.1.17, 9.3.2, 10.2.7.2.1.7, 11.2.5.2.1.5, 11.2.5.2.1.6, 11.3.2(5), 12.1.10.2.1.6, 14.2.8.2.3, 14.2.8.2.4, 14.2.9.1, 14.2.11.1.1, 14.2.11.3.2, A.9.2.1.17, A.14.2.8.2.3, A.14.2.9.1(3)
Definition, A.3.3.41.1
Barriers, A.20.10, see also Horizontal barriers; Thermal barriers; Vertical barriers
Adjacent hazards, 19.2.2, 20.10.1
Assembly occupancies, D.2.3.1.1(3), D.2.4.1.1(3)
Compact storage modules, 21.12.4, 21.12.5, 21.12.6.1, A.21.12.5
Oxidizer solids and liquids storage, 26.36.1.3.4.4
Basements, 19.4.1.5
Bath modules, marine, 30.4.6
Bathrooms, 9.2.4.1, A.9.2.4.1.1, D.1.1.3.2, D.1.1.5.1
Apartment buildings, D.1.1.7.1
Definition, 3.3.16, A.3.3.16
Guest rooms or suites, D.2.18.2.1
Lodging or rooming houses, D.2.16.2.2
Residential board and care occupancies, D.1.1.8.2, D.2.22.2.2
Batteries, A.20.4, Table A.20.4.1, Table A.20.4.5.1, Table A.20.4(a), Table A.20.4(b)
B-class boundary, 30.4.10.1(2)
Definition, 3.3.119.2
Bedding, see Furniture and bedding
Bends, return, 16.3.11
Bin box storage
Class I to IV commodities, Table 4.3.1.7.1, Table 20.6.4.2, Table 20.6.4.3, 21.2
Control mode density/area (CMDA) sprinklers, 21.2, 21.3, A.21.2, A.21.3.2 to A.21.3.3.2
Control mode specific application (CMSA) sprinklers, 22.2
Definition, 3.3.18
Discharge criteria, Table 4.3.1.7.1
Plastic and rubber commodities, Table 4.3.1.7.1, 20.6.4.3, 21.3, A.21.3.2 to A.21.3.3.2
Special design for, 21.2.4.1
Boat storage, rack, A.20.4(a)
Boilers, oil-fired, 26.27.1.9
Bolts, 6.8.2
Clamp, 6.6.2.1.3, 6.6.2.4
Concrete, for, 17.2.2.10, A.17.5.4.3
Steel, for, 17.2.3.5, Table 18.5.12.2(k), A.18.5.12
Wood, for, 17.2.4.3, Table 18.5.12.2(l), Table 18.5.12.2(m), 18.5.12.4 to 18.5.12.6
Bonding, electrical, 16.16, A.16.16.2
Bracing, see Sway braces
Branch lines, 27.2.4.10.2
Compact storage, 26.29.2.1, A.26.29.2.1
Control mode specific application (CMSA) sprinklers, 13.2.8.2.2
Definition, 3.3.19
Dry pipe sprinkler systems, 16.10.3.1, 16.10.3.3
Early suppression fast-response (ESFR) sprinklers, 14.2.8.2.3, 14.2.8.2.4, 14.2.9.1, 14.2.10.1.6, 23.6.3, 25.2.5.1.3, A.14.2.8.2.3, A.14.2.9.1(3)
Fire department connections, 16.12.5.1.1
Flushing, facilitating, 16.6.4
Freezing, protection from, 16.4.1.4.1
Hangers, location, 17.4.3, A.17.4.3.2 to A.17.4.3.6
Light hazard occupancies, 27.5.2.1, 27.5.2.3, 27.5.2.5
Ordinary hazard occupancies, 27.5.3, A.27.5.3.9
Orifice plates, 27.2.4.9.2
Piers and wharves, 26.22.2.1.2(B)
Preaction systems, 16.10.3.2
Protection area of coverage, determination of, 9.5.2.1.1, 27.2.4.6.3, 27.2.4.6.4
Restraint of, 18.6, A.18.6.1 to A.18.6.6
Return bends connected to, 16.3.11.2
Sway bracing, 18.5.5, A.18.5.5.1 to A.18.5.5.10.2(1)
Brazed joints, 7.5.4, 30.4.10.1(4), A.7.5.4, A.30.4.10.1(4)
Buildings
Detached, 4.5.6, A.4.5.6
Differential movement, sway braces for buildings with, 18.5.13
Multistory, 16.9.3.3.2, 16.9.11, 16.11.10, 17.4.5.4, 18.2.3.1(2), 20.7.2(7), A.16.9.11.5, A.16.11.10, A.17.4.5.4.2, A.18.2.3.1(2)(a), D.1.1.2, D.1.1.11.1, D.2.2, D.2.27.1.1
Service chutes, 19.3.3.4.1, 26.15.2.2, A.26.15.2.2, see also Vertical shafts

EDUFIRE.IR

Service equipment, rooms housing, D.1.1.9.2, D.1.1.10.2, D.2.23.2.2, D.2.24.2.2
Structure, sprinkler piping supported by, 17.4.1.3, A.17.4.1.3
Building steel, see Steel
Bulkheads, 30.2.2, 30.2.5.1(3), 30.4.13, A.21.4.1.1, A.25.2.3.2.1, A.30.2.2, C.11
Definition, 3.3.20
Bushings, 16.3.12.2, 16.8.5, 29.4.2, 29.5.1, A.16.3.12.2

C

Cabinets, 11.3.5.1.4, 12.1.11.1.5, 16.2.7.3, 16.2.7.6, 16.2.7.7, 26.7.2.2, A.11.3.5.1.4, A.12.1.11.1.5, A.16.2.7.6, A.16.2.7.7.1
Cable, see Wire/cable/spools
Cable spreading rooms, 26.27.1.3
Cable tunnels, 26.27.1.4, 26.27.2.2, 26.27.2.4
Calculations, see Hydraulic calculations
Canopies, 4.5.4.1, 9.2.1.16, 9.2.3.2, 19.3.3.1.5.2(9), 20.7.2(8), 26.32.1.1
Carbon dioxide extinguishing system, 26.4.1.7(1)
Cartoned storage, 20.3.4, 20.4.1(2), 20.4.2, 20.4.4.1, 20.4.5.3(1), 20.4.5.4, 25.8.3.2.1, 25.8.3.3.1(A), Table A.20.3, A.20.4.2, Table A.20.4(b)
Alternative sprinkler system designs, 24.2.1, 24.3.1, 24.3.2
Control mode specific application (CMSA) sprinklers, Table 22.5
Definition, 3.3.22
Discharge criteria, Table 4.3.1.7.1
Plastics, Table 4.3.1.7.1, Table 21.3.1, 21.5.1.1, 21.8.1.2(2), Table 22.3, 23.4.2, 23.6.1, 23.13.2(2), 25.2.3.4.1, 25.2.4.3.1, 25.8.2.5.1, Table 25.8.2.6, Table 25.8.2.7, 25.8.3.2.1, 25.8.3.3.1(A), 25.9.4.1.1, 25.9.4.1.2, 25.9.4.3.1, A.20.10, A.25.9.4.3.1
Retail stores, in, 21.9, 23.11
Carton records storage, 20.4.13, 21.11, A.21.11.6.3.5, C.25
Definition, 3.3.21, A.3.3.21
Catwalks, D.2.3.1.1(2), D.2.4.1.1(2)
Carton records storage, 21.11, A.21.11.6.3.5, C.25
Definition, 3.3.23
Ceiling fans, 11.2.5.2.1.9, 12.1.10.2.1.9, 12.1.11.2.1.7, A.11.2.5.2.1.9, A.12.1.10.2.1.9, A.12.1.11.2.1.7
Ceiling flanges, hanger screws in, 17.2.4.2
Ceiling height (definition), 3.3.24, see also Clearance
Ceiling pockets, 10.2.9, 11.2.8, 12.1.11.3.5, 19.3.3.2.3.1(4), A.10.2.9.1, A.10.2.9.2(4), A.11.2.8.2(4)
Definition, 3.3.25, A.3.3.25
Ceilings, see also Cloud ceilings; Concealed spaces; Drop-out ceilings; Suspended ceilings
Clearance to, see Clearance
Deflector distance below, 9.5.4.1, 10.2.6.1, 10.3.5.1.1, 11.2.4.1, 11.3.5.1.1, 12.1.8, 13.2.7.1, 14.2.10.1, 23.7.4.1, A.9.5.4.1, A.10.2.6.1.2(5) to A.10.2.6.1.4.5, A.11.2.4.1.1.4(A), A.11.2.4.1.1.4(B), A.13.2.7.1
Existing system modifications, 29.4.2 to 29.4.5
Flat, 10.2.6.1.1.3(A), 10.3.2(2), 11.2.4.1.1.4(B), 12.1.1, A.11.2.4.1.1.4(B)
Definition, 3.3.26.1
Frangible, 18.4.4, A.18.4.11
Horizontal, 10.3.2(1), 11.2.4.2.1, 11.3.2, 12.1.1, 12.1.8.7.3
Definition, 3.3.26.2
Open-grid, 9.2.15
Peak, sprinklers at or near, 10.2.6.1.3, 11.2.4.1.3, A.10.2.6.1.3.2, A.10.2.6.1.3.3, A.11.2.4.1.3
Sheathing, pipe hanger installation and, 17.4.1.1, A.17.4.1.1.1
Sloped, 10.2.6.1.3, 10.2.6.1.4, 10.2.6.2.2, 10.2.6.2.3, 10.3.2(1), 10.3.5.2.1, 11.2.4.1.3, 11.3.2, 11.3.5.2.1, 19.4.3.4, 27.2.4.6.5, 27.2.4.7.7, A.10.2.6.1.3.2, A.10.2.6.1.3.3, A.10.2.6.1.4.3 to A.10.2.6.1.4.5, A.11.2.4.1.3, A.27.2.4.6.2, A.27.2.4.6.5
Definition, 3.3.26.3
Early suppression fast response (ESFR) sprinklers, installation of, 14.2.3
Residential sprinklers, installation of, 12.1.1, 12.1.6.2, 12.1.7.5, 12.1.7.6, 27.2.4.6.2
Storage facilities, 20.6.1
Water demand requirements, 19.3.3.2.3.3, 19.3.3.2.4
Smooth, 10.3.2(1), 10.3.2(2), 11.3.2, 12.1.1
Cloud ceilings, 9.2.7.2.4
Definition, 3.3.26.4
Detector location, 8.8.2.8.2.1
Spaces above, 9.3.14, A.9.3.14.3
Sprinklers above, piping to, 27.2.4.6.4, Table 27.5.2.4, Table 27.5.3.5
Sprinklers below, piping to, 16.3.12, 16.15.1.3(6), 27.2.4.6.4, Table 27.5.2.4, Table 27.5.3.5, A.16.3.12.1, A.16.3.12.2
Ceiling sprinklers, rack storage, 24.1.4, 25.2, 25.9 to 25.12, A.24.3, A.25.2.1.2 to A.25.2.3.5, A.25.10.1, C.9
Alternative designs, 25.8.1.10
Carton records storage, 21.11.6.2, 21.11.6.5.2
Columns, protection of, 20.15.1, A.20.15.1
Density adjustments, 21.4.1.4, 21.4.2.1.1, 21.4.2.2, 25.2.3.2.4, A.25.2.3.2.4
Design criteria, 25.2, A.25.2.1.2 to A.25.2.3.5
Existing system modifications, 29.4.5, 29.5.3
High bay records storage, mobile, 23.12.1, A.23.12.1
Low-piled storage, 4.3.1.5.1, 4.3.1.5.2
Oxidizer solids and liquids storage, Table 26.36.1.3.1, 26.36.1.3.2
Plastics storage, 21.3.4, Table 21.5.3, C.19, C.20, C.22
Refrigerated spaces, 8.8.2.8.4
Solid racks, see Solid shelf racks
Tires, rubber, 21.6.1
Water demand, C.22
Double-row and single-row racks, 21.4.1.1, 21.4.1.2, 21.5.1.1, A.21.4.1.1, A.21.4.1.2.1, C.23
Multiple-row racks, 21.4.1.3, 21.5.1.1
Portable racks, 21.4.1.1, 21.4.1.3.2, A.21.4.1.1, C.14, C.15
Cellular plastics, see Expanded (foamed or cellular) plastics
Central, proprietary, or remote station supervisory service, 16.9.3.3.1(1), 16.11.7.1, 16.11.10(2), A.16.9.3.3, A.16.11.1.1, A.16.11.2, A.26.19.2.4
Central safety station, 30.2.3.4, 30.2.6.1, 30.4.12.1, 30.4.12.4, 30.7.3.12.2(3), 30.8.2, A.30.2.6.1, A.30.4.12.1
Definition, 3.3.119.3
Certificate, owner's, 4.2, A.4.2
Check valves, 16.9.5, 16.9.7, 16.9.11.1 to 16.9.11.3, 16.11.5.4, A.16.9.5, A.16.9.7
Air compressor, automatic, 8.2.6.6.4
Air filling connection, 8.2.6.4.2
Alarm, 16.11.3.1
Combined systems, 8.4.3.6, 8.4.4
Control valves with, 16.9.6, A.16.9.6.5
Definition, 3.3.28
Dry pipe systems, 8.2.3.9, 8.2.4.5
Fire department connections, 16.12.5.1, 16.12.5.2, 16.12.6.1, A.16.12.5
Hydrostatic tests, 28.2.1.7
Outside sprinklers, 8.7.4.2, A.8.7.4.2.1, A.8.7.4.2.3
Refrigerated spaces, 8.8.2.6, A.8.8.2.6
Chemicals, protection of laboratories using, 26.8
Chutes, see Vertical shafts
Circulating closed-loop sprinkler systems
Marine systems, 30.3.4
Working plans for, Fig. A.27.1.5(a), Fig. A.27.1.5(b)
Clamps, joint, 6.6.2.1.1, 6.6.2.4
Classification, see Commodity classification; Occupancy classifications

EDUFIRE.IR

Cleanrooms, 26.23, A.26.23.2.3
Clearance
To ceiling, 9.1.1(5), 9.1.1(6), 15.2.1(7), 20.6.4, 21.5.1.1 to 21.5.1.4, 25.9.5.4, 25.9.5.5, A.20.6.4.1, B.3
Definition, 3.3.29
In-rack sprinklers, 25.4.2, A.25.4.2.1
Piping, 18.4, A.18.4
To storage, 9.5.6, 10.2.8, 10.3.7, 11.2.6, 11.2.7, 11.3.7, 13.2.9, 14.2.12, 25.9.5, A.9.5.6.1, A.10.3.7, A.11.2.6, A.11.2.7.1
Closets, 9.2.4.2, 9.4.2.5(10), 9.5.5.4, A.9.2.4.2
Apartment buildings, D.1.1.6.1, D.1.1.7.1, D.2.19.2.1, D.2.20.2.1
Guest rooms or suites, D.1.1.5.1, D.2.18.2.1
Hospital clothes closets, 9.2.5, A.9.2.5
Lodging or rooming houses, D.1.1.3.1, D.1.1.3.2, D.2.16.2.1, D.2.16.2.2
Mercantile occupancies, D.1.1.9.2, D.1.1.10.2, D.2.23.2.2, D.2.24.2.2
Residential board and care occupancies, D.1.1.8.2, D.2.22.2.2
Cloud ceilings, 9.2.7, 19.3.3.2.3.1(5), A.9.2.7.1 to A.9.2.7.2.5, A.18.1
Definition, 3.3.32
Coal mines, 26.34, A.26.34.1.1.1, A.26.34.1.3.3(8)
Coatings
Pipe, 7.8.2, 16.2.2.1.1, 16.2.2.1.2, 16.4.2.1, A.16.2.2.1.1, A.16.4.2.1
Special, 7.2.5, A.7.2.5.1, A.7.2.5.2
Color coding of sprinklers, 7.2.4.1 to 7.2.4.5
Columns, 11.2.5.2.1.3, 11.3.6.2.1.3, A.11.2.5.2.1.3, A.11.3.6.2.1.3, C.10
Control mode specific application (CMSA) sprinklers, installation of, 13.2.8.2.1.3, A.13.2.8.2.1.3
Early suppression fast-response (ESFR) sprinklers, A.14.2.11
Exterior, 20.7.2(8)
Protection
Idle pallets, plastic, 20.14.2.2.4.1(5)
Rack and rubber tire storage, 20.15, A.20.15.1
Residential sprinklers, installation of, 12.1.10.2.1.3, 12.1.11.2.1.3, A.12.1.10.2.1.3, A.12.1.11.2.1.3
Roll paper (definition), 3.3.33
Steel, see Steel
Combined dry pipe-preaction sprinkler systems, 8.4, A.8.4.2 to A.8.4.3.2
Definition, 3.3.206.2
Combustion engines, installation and use of stationary, 26.6, A.26.6.1
Commodities, see also specific commodities, e.g., Plastics
Definition, 3.3.35
Rack storage, see Rack storage
Commodity classification, 4.3.1.3, 20.3, A.20.3, Table A.20.3, C.2
Class I, 4.3.1.5.1, 20.4.1, 20.10.2, Table 20.12.2.6, Table A.20.3, A.20.10.2
Clearance to ceiling, 20.6.4.3
Palletized, solid pile, bin box, or shelf storage, protection of, Table 4.3.1.7.1, 20.3.2.2.1.1, 20.3.2.2.2.1, 20.3.2.4, 20.3.2.5, 20.4.1, Table 20.6.4.2, Table 20.6.4.3, 20.9.2.1, 20.9.2.3, A.20.3.2.2.2.1
Rack storage, protection of, Table 4.3.1.7.1, 20.5.3.3.1, Table 20.6.4.2, Table 20.6.4.3, 20.9.2.2 to 20.9.2.4, 20.9.2.6, Table 20.15.1, Annex C
Retail stores, storage/display in, 20.4.12
Class II, 4.3.1.5.1, 20.4.2, 20.10.2, Table 20.12.2.6, Table A.20.3, A.20.4.2, A.20.10.2
Palletized, solid pile, bin box, or shelf storage, protection of, Table 4.3.1.7.1, 20.3.2.2.1.1, 20.3.2.2.2.1, 20.3.2.4, 20.3.2.5, Table 20.6.4.2, Table 20.6.4.3, 20.9.2.1, 20.9.2.3, A.20.3.2.2.2.1
Rack storage, protection of, Table 4.3.1.7.1, 20.5.3.3.1, Table 20.6.4.2, Table 20.6.4.3, 20.9.2.2 to 20.9.2.4, 20.9.2.6, Table 20.15.1, Annex C
Retail stores, storage/display in, 20.4.12
Class III, 4.3.1.5.1, 20.4.3, 20.10.2, Table 20.12.2.6, Table A.20.3, A.20.4.3, A.20.10.2
Palletized, solid pile, bin box, or shelf storage, protection of, Table 4.3.1.7.1, 20.3.2.2.1.1, 20.3.2.2.2.1, 20.3.2.4, 20.3.2.5, Table 20.6.4.2, Table 20.6.4.3, 20.9.2.1, 20.9.2.3, A.20.3.2.2.1, A.20.3.2.2.2.1
Rack storage, protection of, Table 4.3.1.7.1, 20.5.3.3.1, Table 20.6.4.2, Table 20.6.4.3, 20.9.2.2 to 20.9.2.4, 20.9.2.6, Table 20.15.1, Annex C
Retail stores, storage/display in, 20.4.12
Class IV, 4.3.1.5.1, 20.4.4, 20.10.2, Table 20.12.2.6, Table A.20.3, A.20.4.4, A.20.10.2
Palletized, solid pile, bin box, or shelf storage, protection of, Table 4.3.1.7.1, 20.3.2.2.1.1, 20.3.2.2.2.1, 20.3.2.4, 20.3.2.5, Table 20.6.4.2, Table 20.6.4.3, 20.9.2.1, 20.9.2.3, A.20.3.2.2.1, A.20.3.2.2.2.1
Rack storage, protection of, Table 4.3.1.7.1, 20.5.3.3.1, Table 20.6.4.2, Table 20.6.4.3, 20.9.2.2 to 20.9.2.4, 20.9.2.6, Table 20.15.1, Annex C
Retail stores, storage/display in, 20.4.12
Mixed commodities, 20.4.14
Pallet types, 20.3.2, A.20.3.2.2.1, A.20.3.2.2.2.1
Plastics, elastomers, and rubber, 20.4.3, 20.4.4, 20.4.5 to 20.4.8, 20.4.9, 20.5.3.3.1, 20.6.4.4, Table 20.6.4.4, 20.10.2, Table 20.12.2.6, Table 20.15.1, A.20.3.2.2.1, A.20.3.2.2.2.1, Table A.20.3, Table A.20.4.1, A.20.4.3, A.20.4.4, Table A.20.4.4, Table A.20.4.5.1, A.20.4.5 to A.20.4.8, A.20.10.2, C.21
Rolled paper storage, 20.4.10, A.20.4.10
Compact storage, 21.12, A.21.12.1, A.21.12.5, C.24
Definition, 3.3.36
Compact storage modules, 21.12, 26.29.1.3, A.21.12.1, A.21.12.5, A.26.29.1.3.1, A.26.29.1.3.2, C.24
Definition, 3.3.37
Compartmented (definition), 3.3.39, A.3.3.39
Compartments (definition), 3.3.38
Composite wood joist construction, see Wood joist construction
Compressed air, see also Air compressors
Dry pipe systems, 8.2.6.3 to 8.2.6.7, A.8.2.6.3 to A.8.2.6.6.1
Pressure tanks (marine systems), 30.7.2.4.1
Compressed gases, storage use and handling of, 26.11
Concealed spaces
Cleanrooms, 26.23.1.2
Spaces above ceilings, 9.3.14, A.9.3.14.3
Sprinklers in, 9.3.2, 9.3.14, 9.3.17, 9.4.2.5(5), 19.4.3.4, A.9.3.14.3, A.9.3.17.1.1
Marine systems, 30.4.4, A.30.4.4
Pendent and upright sprinklers, 10.2.6.1.4, A.10.2.6.1.4.3 to A.10.2.6.1.4.5
Unsprinklered, 9.2.1, 9.2.3.3, 9.3.14.1, 19.3.3.1.5, 19.3.3.2.8.2, 20.7, 20.13.1.2, A.9.2.1, A.20.7.1
Concealed sprinklers, 7.2.4.3, 7.2.6.2, 7.2.6.3, 10.2.6.1.1.2, 11.2.4.1.1.2, 12.1.8.1.3, 16.2.5.2 to 16.2.5.4, A.7.2.6.2, A.16.2.5.2
Definition, 3.3.205.3.1
Concrete, fasteners or anchors ins, see Anchors
Concrete tee construction, 10.2.6.1.2(5), 13.2.7.1.2(3), A.10.2.6.1.2(5), A.15.3.4
Definition, A.3.3.41.1(2)
Connections, see also Couplings; Fire department connections; Hose connections; Test connections
Air supply, 8.2.6.4, A.8.2.6.4.1
City, 20.12.2.3
Domestic/fire protection water supply interconnection, B.1

EDUFIRE.IR

Drain, 16.10.4, A.16.10.4.6
Foundation walls, through or under, 5.1.6.2, A.5.1.6.2
Grooved, 6.3.5, A.6.3.5.3
Threaded, 6.3.4
Underground piping
Aboveground piping, water supply connection to, 5.1.6.1
Fittings and appurtenances, 6.3, A.6.3.1, A.6.3.5.3
Valves, water supply connection, 16.9.3.3.1
Waterworks system, from/to, 5.1.8, 5.2.1, 5.2.2, A.5.1.8, A.5.2.1, A.5.2.2
Construction, see Obstructed construction; Unobstructed construction
Containers, see also Cylinders; Open-top containers
Compressed gas and cryogenic fluids in, 26.11
Empty, Table A.20.4.1, Table A.20.4.2, Table A.20.4.4, Table A.20.4.5.1, Table A.20.4(b)
Plastic, Table A.20.4.5.1, Table A.20.4(b)
Shipping, master, or outer (definition), 3.3.42, A.3.3.42
Storage, Table A.20.4(a)
Contractor's material and test certificate
Aboveground pipe, 28.1(3), Fig. 28.1, 28.2.3.2.4, 28.2.3.4.2, 28.2.3.4.3, A.28.2.3.4.2
Underground pipe, 6.1.10(3), Fig. 6.10.1
Control mode density/area (CMDA) sprinklers, 20.6.4.2 to 20.6.4.4, 20.6.6.6.1, Chap. 21, see also Density/area method
Alternative sprinkler system designs, Table 24.4.1
Baled cotton storage, 21.10, A.21.10
Definition, 3.3.205.4.1, A.3.3.205.4.1
Discharge considerations, 21.1.10
High-expansion foam, use of, 20.9.2.1, 20.9.2.2
Hose stream allowance and water supply duration, Table 20.12.2.6
Obstructions to discharge, 24.5.3.2
Palletized, solid-piled, bin box, or shelf storage, Tables 20.6.4.2 to 20.6.4.4, 21.2, 21.3, Table 21.6.1(a), Table 21.6.1(b), A.21.2, A.21.3.2 to A.21.3.3.2
Plastics storage, 20.3.4, 20.6.4.3, 20.6.4.4, 21.3, A.21.3.2 to A.21.3.3.2, C.22
Rack storage, Tables 20.6.4.2 to 20.6.4.4, 21.4, Table 21.6.1(a), Table 21.6.1(b), 21.10, 21.11.6.3 to 21.11.6.5, 21.11.6.4.1, 21.11.6.4.4, 21.11.6.5.2, 25.2.3, 25.4.6, 25.4.7.1, 25.5.1.8, 25.5.1.9, 25.5.2.2, 25.6.2, 25.6.3.2, 25.6.3.5(1), 25.9, Table 25.12.2.1, Table 25.12.3.1, A.21.4.1.1 to A.21.4.2.1, A.21.10, A.21.11.6.3.5, A.25.2.3.2.1 to A.25.2.3.5, A.25.5.2.2.3, A.25.9.2.1.1 to A.25.9.2.3.1, C.14 to C.19, C.22, C.23
Rubber commodities storage, 21.3, A.21.3.2 to A.21.3.3.2
Rubber tire storage, Table 21.6.1(a), Table 21.6.1(b)
Standard coverage area, 24.5.2.2
Wood pallets, indoor storage of, 20.14.1.2, Table 20.14.1.2(a)
Control mode specific application (CMSA) sprinklers, 7.2.2.5, 9.4.3.1(3), 19.3.3.2.4(2), 20.10.3
Alternative sprinkler system designs, Table 24.2.1, Table 24.3.1, Table 24.3.2(a), Table 24.3.2(b)
Clearance to storage, 13.2.9
Columns, 20.15.1(4), 20.15.2.4
Definition, 3.3.205.4.2, A.3.3.205.4.2
Deflector position, 13.2.7, A.13.2.7.1
Distance below ceilings, 13.2.7.1, A.13.2.7.1
Hose stream allowance and water supply duration, Table 20.12.2.6
Hydraulic calculation procedure, 27.2.4.3
Installation requirements, Chap. 13
Obstructions to discharge, 9.5.5.3.3, 13.2.7.1.2, 13.2.8, 24.5.2.2, 24.5.3.2, A.13.2.8
Open wood joist construction, 22.1.5, A.22.1.5.4
Palletized, solid pile, bin box, or shelf storage, 22.2, 22.3
Protection areas, 13.2.5, A.13.2.5
Rack storage, 22.1.6, 22.1.7, 22.4, 22.5, 25.5.2.3, 25.6.2, 25.6.3.3, 25.6.3.5(2), 25.10, Table 25.12.2.1, Table 25.12.3.1, A.22.1.6, A.25.10.1, C.19
Roll paper storage, 22.7
Rubber tire storage, 22.6
Spacing, 13.2.6, A.13.2.6.1
Storage applications, Chap. 22
Wood pallets, protection of, 20.14.1.2(2), Table 20.14.1.2(b)
Control valves, 16.9.3, 16.11.6, 16.12.5.2, A.16.9.3, A.18.2, see also Floor control valve assemblies
Abandoned in place, 29.2.3
Accessibility, 16.9.3.1.1, 16.9.3.4, 26.4.2.1(7)
Advanced light water reactor electric generating plants, 26.27.2.1.2, A.26.27.2.1.2
Automated, 16.9.4
Check valves with, 16.9.6, A.16.9.6.5
Definition, 3.3.46, A.3.3.46
Drain connections, 16.10.4.3, 16.10.4.8
Gravity tanks, 16.9.6.5, A.16.9.6.5
High-rise buildings, D.1.1.2.1, D.2.2.1.1
Hose connections, 16.15.2.2
Identification, 16.9.3.5, 16.9.12, A.16.9.12
In-rack sprinklers, 25.1.3.2, A.25.1.3.2
Marine systems, 30.2.6.1, 30.4.12.2, A.30.2.6.1
Multiple systems, fire department connections for, 16.12.5.4
Outside sprinklers, 8.7.3
Preaction and deluge systems, 8.3.1.7.4, 8.3.1.8, A.8.3.1.7.4
Refrigerated spaces, 8.8.2.5, A.8.8.2.5
Spray application areas, 26.4.2.1(7)
Testing, 6.10.2.4.3, 28.2.3.5
Water-cooling towers, 26.21.2.5.1
Conventional pallets, Figs. 21.4.1.2(a) to 21.4.1.2(e), Figs. 25.2.3.2.3.1(a) to 25.2.3.2.3.1(g), Fig. A.3.3.171(a), C.9
Definition, 3.3.147.1, A.3.3.147.1
Conventional sprinklers, see Old-style/conventional sprinklers
Conveying of vapors, gases, mists, and noncombustible particulate solids, 26.32
Conveyors
Coal, underground conveyors for, 26.34.1.3, 26.34.2.1, A.26.34.1.3.3(8)
Sprinklers obstructed by, 14.2.11.3.1(1)
Waste and linen conveying systems, 26.15.2.2.2, 26.15.2.2.3
Cooking equipment and operations
Commercial, 8.9, 9.4.2.5(7), A.8.9.2
Residential, Table 9.4.2.5(c)
Coolers, see Refrigerated spaces
Core (rolled paper) (definition), 3.3.48
Cornice sprinklers, 8.7.8.5, Table 8.7.9.1
Corridors, A.20.8.1
Bathrooms opening onto, 9.2.4.1.3
Design areas, 19.3.3.3.6, 19.3.3.3.7
Residential sprinklers in, 12.1.1, A.12.1.1
Corrosion-resistant detectors, 8.10.1
Corrosion-resistant piping, 7.8, 8.10.1, 9.4.4.4, 16.3.9.2, 16.4.2, 16.8.2.1, 16.10.6.3, 16.11.1.3, 16.11.1.4, 26.21.2.9.1, 26.29.2.3, A.16.4.2, A.16.8.2.1, A.26.29.2.3
Coatings for, 16.2.2.1.1, 16.2.2.1.2, 16.4.2.1, A.16.2.2.1.1, A.16.4.2.1
Definition, 3.3.49
Corrosion-resistant sprinklers, 7.2.5.1, 16.2.2, 30.4.8.3, A.7.2.5.1, A.16.2.2
Definition, 3.3.205.4.3
Water-cooling towers, 26.21.2.9.2, 26.21.2.9.3, A.26.21.2.9.2, A.26.21.2.9.3
Corrosion-retarding material, 7.8, 29.1.8, see also Microbiologically influenced corrosion (MIC)
Definition, 3.3.51
Underground pipe joint restraints, 6.6.2.5, A.6.6.2.5
Cotton, baled, see Baled cotton
Couplings, 16.8.4, 16.9.11.5, 17.2.2.9.4, A.16.8.4, A.16.9.11.5, see also Flexible couplings

EDUFIRE.IR

Cover plates, 7.2.6, 16.2.3.2, 16.2.5, 29.3.7, A.7.2.6.2
Cp, 18.5.9.3, 18.5.9.5, 18.6.4, A.18.5.9.3.2, A.18.5.9.5, A.18.6.4
Definition, 3.3.52
Cross mains, 27.2.4.10.2, 27.5.2.3, 27.5.3.8
Definition, 3.3.53
Hangers, location, 17.4.4.3 to 17.4.4.5
Sway bracing, 18.5.5, A.18.5.5.1 to A.18.5.5.10.2(1)
Cryogenic fluids, storage use and handling of, 26.11
Cultural resource properties, 26.29, A.26.29.1.1 to A.26.29.2.3
Curtains, privacy, 10.2.7.2.2, 10.3.6.2.2, 11.2.5.2.2, 11.3.6.2.2, 12.1.10.2.2, 12.1.11.2.2, A.10.2.7.2.2.1, A.10.3.6.2.2.1, A.11.3.6.2.2.1, A.12.1.11.2.2
Cutoff rooms, plastic pallets stored in, 20.14.2.2.4.1
Cutting, oxygen-fuel gas systems for, 26.9
Cylinders
Acetylene cylinder charging plants, 26.10
Compressed gas and cryogenic fluids in, 26.11

D

Darcy Weisbach formula, 27.2.1.4, 27.2.2.1.3, 27.2.4.8.2, A.27.2.4.8.2
Decks
Building height, measurement of, 20.6.2.1, 20.6.2.2
Corrugated metal deck roofs, 9.5.4.1.2
Building height, measurement of, 20.6.2.2
Ceilings, clearance to, 20.6.4.1.1, 20.6.4.1.2
Marine, 30.4.1, 30.4.10.1, 30.4.11.1, 30.4.12.6, 30.4.13, A.30.4.10.1(4)
Maximum loads, metal decks, Table 18.5.12.2(a), Table 18.5.12.2(f), Fig. A.18.5.12(a)
Pipe hangers under metal, 17.4.1.4, A.17.4.1.4.1
Sprinklers obstructed by, 11.2.4.1.2(1)
Decorative frame elements, 9.2.1.19
Decorative sprinklers, 7.2.5.3
Definition, 3.3.205.4.12
Deep fat fryers, 8.9.8.2
Definitions, Chap. 3
Deflectors
Ceilings, distance below, see Ceilings
Clearance to storage, 9.5.6, 10.2.8.1, 10.3.7, 11.2.6.1, 11.2.7.1, 11.3.7, 13.2.9, 14.2.12, 20.6.6, 25.4.2, 25.8.2.5.2, 25.8.3.3, A.9.5.6.1, A.10.3.7, A.11.2.7.1, A.20.6.6.2, A.20.6.6.6, A.25.4.2.1
Obstructions below, 9.5.5.2.1, 10.2.7.2.1.1, 10.3.6.2.1.1, 11.2.5.2.1.1, 11.3.6.2.1.1, 11.3.6.3.1, 13.2.8.2.1.1
Position, 9.5.4, 10.2.6, 10.3.5, 11.2.4, 11.3.5, 12.1.8, 13.2.7, 14.2.10, 26.22.2.1.2, A.9.5.4.1, A.10.2.6.1.2(5) to A.10.2.6.1.4.5, A.10.3.5.1.2.1 to A.10.3.5.1.4, A.11.2.4.1.1.4(A) to A.11.2.4.1.3, A.11.3.5.1.2.1 to A.11.3.5.1.4, A.13.2.7.1
Deluge sprinkler systems, 8.3, A.8.3.1 to A.8.3.3
Acetylene cylinder charging plants, 26.10.1
Advanced light water reactors, 26.27.1.4.2, 26.27.2.3
Coal mines, 26.34.1.3.3(7), 26.34.2.1
Definition, 3.3.206.3
Fire department connections, 16.12.5.2(4), 16.12.5.3
Hydraulic calculations, 8.3.3.2, 19.4.3.3, 19.5
Hydrostatic tests, 28.2.1.9
Hyperbaric chambers, Class A, 26.17.1, A.26.17.1.5, A.26.17.1.8
Hypobaric facilities, 26.33.1.1, 26.33.1.7 to 26.33.1.17
Nitrate film vaults, 26.7.1.4, A.26.7.1.4.4 to A.26.7.1.4.6
Open sprinklers, 15.1.1, 19.4.3.3, 19.5
Operational tests, 28.2.3.3
Organic peroxide formulations storage, 26.36.1.2.3
Oxidizer solids and liquids, 26.36.1.3.4.5(A)
Oxygen-fuel gas systems, 26.9.1.2 to 26.9.1.5
Proscenium opening, 9.3.13.2
Return bends, 16.3.11.3
Solvent extraction facilities, 26.35.1.3.5 to 26.35.1.3.7, A.26.5.1
Spray application areas, 26.4.1.1, 26.4.1.7(1), A.26.4.1.1
Test connections, 16.14.4
Water-cooling towers, 26.21.1.1, 26.21.1.4, 26.21.1.7.1, A.26.21.1.1.1, A.26.21.1.1.2, A.26.21.1.7.1.1, A.26.21.1.7.1.3
Water curtain, 19.4.3.4
Waterflow detecting devices, 16.11.3.3
Deluge valves, 16.11.5.1, 16.11.5.2, 16.12.5.2(4), 27.2.3.3, 28.2.3.3.1
Density/area method, 19.3.3.2, 20.7.1, 20.8.3, 27.2.4.2, A.20.7.1, A.27.2.4.2.1, A.27.2.4.2.4, see also Control mode density/area (CMDA) sprinklers
Aircraft engine test facilities, 26.26.1.1, A.26.26.1.1
Design densities, calculation procedure, 27.2.4.6, A.27.2.4.6.1 to A.27.2.4.6.5
Miscellaneous storage, 4.3.1.7.1
Residential sprinklers, replacement of, 29.3.6
Selection of density and area of application, B.2.1.2
Design, sprinkler system, Chap. 19, A.4.3.8, B.2.1.1, see also Allowable stress design (ASD); Density/area method; Hydraulically designed systems
Adjacent design methods, 19.2.2, 20.10, A.19.2.2, A.20.10
Alternative designs, see Alternative sprinkler system designs
Ceiling sprinklers, 25.2, A.25.2.1.2 to A.25.2.3.5
Existing system modification, 29.6
Marine systems, 30.5, A.30.5.2, A.30.5.3
Occupancy hazard fire control, 19.3
Palletized, solid piled, bin boxes, or shelf storage
Class I to IV commodities, 24.2, A.24.2
Plastics and rubber commodities, 24.2, A.24.2
Rack storage
Class I to IV commodities, 24.3, A.24.3
Plastics and rubber commodities, 24.3, A.24.3
Room design method, 19.3.3.3, 20.7.1, 20.8, 27.2.4.1.1, A.20.7.1, A.20.8.1
SEI/ASCE 7, design approach to conform to, Annex E
Special design approaches, 19.4, 21.2.4, 21.8, A.19.4.1.2 to A.19.4.2.1, A.21.8.1.1, C.20
Special design areas, 19.3.3.4, A.19.3.3.4.2
Detached buildings, 4.5.6, 20.14.2.1(2), 26.36.1.2.3, A.4.5.6
Detection devices and systems, see also Waterflow alarms/ detection devices
Coal mines, heat detectors for, 26.34.2.1.3.1 to 26.34.2.1.3.3
Cultural resource properties, 26.29.1.3.6
Deluge systems, 8.3.1.7.1, 8.3.3.1, 26.7.1.4.8, 26.9.1.4, 26.10.1.3
High-expansion foam systems, 20.9.2.7
Optical flame detection, spray application areas, 26.4.1.7(1)
Pilot line detectors, 8.10
Definition, 3.3.205.4.13
Preaction systems, 8.3.1.7.1, 8.3.2.1, 8.8.2.8, A.8.8.2.8.1.1
Spare, 30.3.2
Water-cooling towers, heat detectors for, 26.21.2.7
Differential dry pipe valves, 8.2.5.4.2, 28.2.1.12
Definition, 3.3.206.4.1
Dimensions, 1.6.3, A.1.6.3
Discharge characteristics, sprinklers, 7.2.2, A.7.2.2.1
Distance monitoring, A.7.1.1.5
Definition, 3.3.55
Docks, exterior, 9.2.2, 9.3.18
Doors
Automatic or self-closing, 19.3.3.3.5(3), 20.8.2.1

EDUFIRE.IR

Idle pallet storage above, 20.14.3
Overhead, see Overhead doors
Revolving, enclosures for, 9.2.8
Dormitories, D.1.1.4, D.1.1.5, D.2.17, D.2.18
Double-row racks, Table 4.3.1.7.1, 20.5.3.1.2, 25.4.7.1, 25.5.1.8, 25.5.2.2.1, Fig. A.3.3.171(b), A.25.2.3.3.1, C.8, C.14, C.15, C.22
Alternative sprinkler system designs, 24.3.1, 24.3.2, 25.8.1.7, 25.8.1.9, 25.8.2.1, Fig. 25.8.2.4(d), Fig. 25.8.2.4(e), Table 25.8.2.6, 25.8.3.3.2, 25.8.3.4, A.24.3
Carton records storage, 21.11.3(2)
Ceiling sprinklers, 23.1.4, 25.2.1.2, 25.2.1.4, 25.2.3.2.1, 25.2.3.3.1, A.25.2.1.2, A.25.2.3.2.1, A.25.2.3.3.1, C.23
Control mode density area (CMDA) sprinklers, 21.4.1.1, 21.4.1.2, 21.5, 21.8.1.2, 25.4.6.1, A.21.4.1.1, A.21.4.1.2.1, C.21, C.22
Control mode specific application (CMSA) sprinklers, 22.1.6, 22.4, 22.5, Table 25.2.4.2.1, Table 25.2.4.3.1, 25.4.2.1, A.22.1.6, A.25.4.2.1
Definition, 3.3.56, A.3.3.171(1)
Early suppression fast-response (ESFR) sprinklers, 23.1.4, 23.5.1, 23.6.1, 23.7.1, 23.11.1(12), 23.13.2, C.20
Flue space, 20.5.3.3.1, 20.5.3.3.2.1, 21.8.1.2(6), Fig. A.3.3.116, C.13
In-rack sprinkler location, 25.4.2.1, 25.4.6.1, 25.8.1.7.1, 25.8.3.3.2(A), 25.9.2.2, 25.9.4.2, A.25.4.2.1, A.25.9.2.2.1, A.25.9.4.2.2
In-rack sprinkler spacing, 25.4.2.1, Table 25.5.2.2.3, 25.8.1.7.2, 25.8.3.3.2(B), A.25.4.2.1
Oxidizer solids and liquids storage, 26.36.1.3.4.4(C)
Plastics display/storage, retail stores, 21.9.1
Rubber tire storage, Table 21.6.1(a)
Slatted shelves, 23.13.2, Fig. A.3.3.171(d)
Solid rack, Fig. A.3.3.171(c)
Draft curtains, 14.2.5, 19.2.2, 20.6.5, 20.6.6.6, 20.10.1(2), 23.1.2, A.20.6.6.2, A.20.6.6.6, A.20.10, C.6
Definition, 3.3.57, A.3.3.57
Draft stops, 9.3.5.2, 9.3.5.4, 30.4.10.1(2), D.1.1.4.1, D.1.1.6.3, D.1.1.7.3, D.1.1.9.1(3), D.1.1.10.1(3), D.2.17.2.1, D.2.19.2.3, D.2.20.2.2, D.2.23.2.1(3), D.2.24.2.1(3)
Drains, 16.10, A.16.10.4.6, A.16.10.5.2.1, see also Main drains
Alarm devices, 16.11.9
Auxiliary, 8.2.3.9.2, 16.10.5, 26.29.2.2, A.16.10.5.2.1, A.26.29.2.2
Connections, system, main drain, or sectional, 16.10.4, A.16.10.4.6
Dry pipe valve, 8.2.5.4.3
Fire department connections, 16.12.7, A.16.12.7
In-rack sprinkler systems, 25.1.3.2.1
Marine systems, discharge of drain lines in, 30.4.11
Pressure gauges, 16.13, Fig. A.16.10.4.6(a)
System, 16.10, A.16.10.4.6, A.16.10.5.2.1
Drain valves, 16.9.1.1
Automatic, fire department connections, 16.12.7, A.16.12.7
Discharge of, 16.10.6
Identification, 16.9.12, A.16.9.12
Marine systems, 30.2.6.2
Multistory buildings, 16.9.11.1 to 16.9.11.3
Outside sprinklers, 8.7.4.1
Drop ceilings, 9.3.14.2, 9.3.14.3, A.9.3.14.3
Drop-out ceilings, 9.2.16, 9.3.11, A.9.3.11.1 to A.9.3.11.5
Definition, 3.3.58
Marine systems, 30.4.7
Dry barrel hydrants, 6.10.2.4.2
Definition, 3.3.101.1.1
Dry chemical extinguishing systems, 26.4.1.7(1), 26.34.2.1.1, 26.35.1.3.2, A.26.35.1.3.2
Dry pipe sprinkler systems, 8.2, A.8.2, see also Combined dry pipe- preaction sprinkler systems; Dry pipe valves
Air test, 28.2.1.4, 28.2.2, 29.7.2
Alternative sprinkler system design, 24.3.3
Baled cotton storage, Table 21.10.1
Control mode density area (CMDA) sprinklers, 21.2.2.5
Control mode specific application (CMSA) sprinklers, 13.2.2, 13.2.3.4, 22.1.5.2.1, Table 22.2, 25.2.4.1.2
Cultural resource properties, 26.29.1.2, 26.29.1.3.5, 26.29.2.2, 26.29.2.3, A.26.29.1.2, A.26.29.2.2, A.26.29.2.3
Definition, 3.3.206.4
Drainage, 16.10.3, 16.10.5.3
Early suppression fast-response (ESFR) sprinklers used in, 14.2.2
Existing system modification, 29.7.2
Fire department connections, 16.12.5.2(2)
Floor control valve assemblies, 16.9.11.4
Hose connections, C.5
Light hazard occupancies, 9.4.4.4
Operational tests, 28.2.3.2, A.28.2.3.2
Organic peroxide formulations, 26.36.1.2.2(2)
Piping, protection of, 16.4.1.1, A.16.4.1.1
Quick-opening devices, 8.2.1(5), 8.2.3.3, 8.2.3.4, 8.2.4, 8.4.3.8, 28.2.3.2.2
Residential sprinklers used in, 12.1.3
Spray application areas, 26.4.1.1, A.26.4.1.1
Storage, use for, 20.13.2.2, 20.13.3, A.20.13.2, A.20.13.2.2
Telecommunication facilities, 26.31.2.1
Test connections, 8.2.3.7, 16.14.2, A.8.2.3.7, A.16.14.2
Water-cooling towers, 26.21.1.1.1(2), 26.21.1.7.2, 26.21.2.1.3, A.26.21.1.1.1, A.26.21.1.7.2.1, A.26.21.1.7.2.2
Water delivery/demand requirements, 8.2.3.6 to 8.2.3.8, 19.3.3.2.5, A.8.2.3.7
Waterflow detecting devices, 16.11.3.2
Dry pipe valves, 8.2.1(1), 8.2.3.1, 8.2.4.2, 8.2.5, 8.4.3, 8.8.2.6.2, 16.11.3.2.1, 16.11.3.2.2, 16.11.5.1, 16.11.5.2, 16.11.5.4, 16.12.5.2(2), 27.2.3.3, A.8.2.3.1, A.8.2.5, A.8.4.3.2, see also Differential dry pipe valves
Marine systems, 30.4.12.2
Mechanical dry pipe valves (definition), 3.3.206.4.2
Operational tests, 28.2.3.2.1, 28.2.3.2.3, A.28.2.3.2.3
Dry sprinklers, 8.2.2(2), 8.4.2.4(2), 15.3, 16.2.7.4, 16.3.11.4, 27.2.4.10.3, 29.3.2.1, A.8.2.2(2), A.8.4.2.4(2), A.15.3.1 to A.15.3.4
Definition, 3.3.205.4.4, A.3.3.205.4.4
Marine systems, 30.4.8
Preaction systems, 8.3.2.5(2), A.8.3.2.5(2)
Ducts, 9.3.9
Sprinkler piping below, support of, 17.4.1.5
Sprinklers in, 8.9.2 to 8.9.7, 9.2.14, 9.3.9.1 to 9.3.9.3, Table 9.4.2.5(c), 26.32.1, Fig. A.8.9.2
Cleanrooms, 26.23.1.3, 26.23.2.4, A.26.23.1.3
Spray application areas, 26.4.2.1, A.26.4.2.1
Vertical shafts, 9.2.11, 30.4.5.1
Sprinklers near, 9.4.2.5(9), Table 9.4.2.5(a)
Sprinklers obstructed by, 10.2.7.3.5, 11.2.5.3.5, 12.1.11.3.5, 13.2.8.3.2, 14.2.11.1.1, 14.2.11.3.1(1), A.14.2.11
Dwelling units, 8.2.3.1.1, 9.2.4, 12.1.1, 16.3.9.6.2, A.9.2.4.1.1, A.9.2.4.2, A.12.1.1, D.1.1.6, D.1.1.7, D.2.19.2, D.2.20.2
Definition, 3.3.62

E

Early suppression fast-response (ESFR) sprinklers, 9.4.3.1(4), 20.6.2.6, 20.6.6.3, 20.6.7.1, 20.10.3
Alternative sprinkler system designs, Table 24.4.1
Clearance to storage, 14.2.12
Definition, 3.3.205.4.5, A.3.3.205.4.5
Deflector position, 14.2.10
Design criteria, 23.2
Discharge characteristics, 7.2.2.5, 7.2.2.6

EDUFIRE.IR

Hose stream allowance and water supply duration, Table 20.12.2.6
Hydraulic calculation procedure, 27.2.4.4
Idle pallets
Plastic, 20.14.2.2.3
Wood, 20.14.1.2(3), C.7
In-rack sprinklers, used as, 25.8.2.3
Installation requirements, Chap. 14
Obstructions to discharge, 9.5.5.3.3, 14.2.11, 24.5.2.2.1, 24.5.3.2.1, 24.5.3.2.3, A.14.2.11
Protection areas, 14.2.8, A.14.2.8.2.3
Rack storage, 20.15.1(4), 23.1.4, 23.5 to 23.8, 23.11.1, 23.13, 25.2.5, 25.3.2, 25.5.2.4, 25.6.2, 25.6.3.4, 25.6.3.5(3), 25.8.2.3, Table 25.12.2.1, Table 25.12.3.1, A.23.7, A.23.13.1, C.20, C.26
Roll paper storage, 23.9
Rubber tire storage, 20.15.2.4, 23.8
Slatted shelves, C.20
Spacing, 14.2.4.2, Table 14.2.8.2.1, 14.2.8.2.3, 14.2.8.2.4, 14.2.9, A.14.2.8.2.3, A.14.2.9.1(3)
Storage applications, requirements for, Chap. 23
Earthquake damage, protection from, see Seismic damage, pipe protection from
Eaves, 9.2.1.19, 10.2.6.1.4.5, A.10.2.6.1.4.5
EC, see Extended coverage (EC) sprinklers
Egg crate ceilings, see Open-grid ceilings
Elastomers, classification of, 20.4.5, A.20.4.5
Electrical bonding and grounding, 16.16, A.16.16.2
Electrical equipment, 9.3.20, A.9.3.20.1
Electric generating plants, advanced light water reactor, 26.27, A.26.27.1.1 to A.26.27.2.1.2
Elevator hoistways and machine rooms, 9.2.13, 9.3.6, 10.3.2(4), A.9.3.6.1 to A.9.3.6.5, D.1.1.9.2, D.1.1.10.2, D.2.23.2.2, D.2.24.2.2
Encapsulation (encapsulated storage)
Alternative sprinkler system designs, Table 24.2.1, Table 24.3.2(a), Table 24.3.2(b)
Definition, 3.3.64, A.3.3.64
Palletized, solid pile, bin box, or shelf storage
Control mode density/area sprinkler protection criteria, 21.2.1, 21.2.3, A.21.2.1(3)
Control mode specific application (CMSA) sprinklers, Table 22.2
Early suppression fast response (ESFR) sprinklers, Table 23.3.1
Rack storage
Ceiling sprinklers, 21.4.1.2, 21.4.1.3, 21.4.2.1.1, 21.4.2.2, 25.2.3.2.1, 25.2.3.2.2, Table 25.2.3.3.2, 25.2.3.4.1.1, 25.2.3.4.2, 25.2.3.5, Table 25.2.5.1.1, A.21.4.1.2.1, A.25.2.3.2.1, A.25.2.3.5, C.15
Early suppression fast response (ESFR) sprinklers, Table 23.5.1
In-rack sprinkler systems, 25.9.3.1, 25.9.3.3, 25.9.4.1.1, 25.9.4.1.3, 25.9.4.1.4, 25.9.4.2, 25.9.4.3.1, A.25.2.3.3.1, A.25.9.3.3, A.25.9.4.2.2, A.25.9.4.3.1
Engines, stationary combustion, installation and use of, 26.6, A.26.6.1
Equivalency to standard, 1.5
Escalators, see Moving stairways
Escutcheons, 7.2.6, 16.2.5, A.7.2.6.2, A.16.2.5.1, A.16.2.5.2
ESFR, see Early suppression fast-response (ESFR) sprinklers
Exhaust systems
Air conveying of vapors, gases, mists, and noncombustible particulate solids, 26.32
Commercial-type cooking equipment, 8.9.2 to 8.9.7, A.8.9.2
Existing system modifications, Chap. 29
Expanded (foamed or cellular) plastics, Table 4.3.1.7.1, 20.4.3.2, 20.4.3.3, 20.4.4.1, 20.4.5.2, 20.4.5.3, 20.4.5.4, Table 21.3.1, 21.8.1.2(2), 22.3, 23.4.2, 23.6.1, 23.7, 23.13.2(2), 25.8.2.5, 25.9.4.1.1, 25.9.4.2.1, 25.9.4.3.1, Table A.20.3, A.20.4.5.2, A.20.4.11, A.21.3.3, A.21.3.3.1(2), A.23.7, A.25.9.4.3.1
Definition, 3.3.65
Exposed Group A plastic commodities, Table 4.3.1.7.1, 20.3.4, 20.4.3.2, 20.4.5.3(2), 20.4.5.4, Table 21.3.1, 21.5.3, 21.8.1.2(2), Table 22.3, Table 22.5, 23.4.2, 23.6.1, 23.7, 23.13.2(2), 25.2.3.4.2, 25.2.4.3.1, 25.8.2.5, Table 25.8.2.6, Table 25.8.2.7, 25.8.3.2.2, 25.9.3.3, 25.9.4.1.3, 25.9.4.1.4, 25.9.4.2.3, 25.9.4.3.1, Table A.20.3, A.20.4.11, A.21.3.3.1(2), A.23.7, A.25.9.3.3, A.25.9.4.3.1
Definition, 3.3.66
Retail stores, in, 21.9, 23.11
Exposure protection systems, 8.7, 9.4.4.3, 19.4.2, A.1.1.3, A.8.7.4.2.1 to A.8.7.9, A.19.4.2.1
Hydraulic calculations, 19.4.2.1, A.19.4.2.1
Localized protection, 9.3.17.1.2
Operational tests, 28.2.6
Orifice plates, 27.2.4.9.3
Solvent extraction facilities, 26.35.1.3.5 to 26.35.1.3.7
Water-cooling towers, 26.21.1.6
Extended coverage (EC) sprinklers, Chap. 11, 19.3.3.2.2.3, 19.3.3.2.2.4, 19.3.3.2.3.1, 19.3.3.2.4(1), 27.2.4.9.4
Alternative sprinkler system designs, 24.1.2.2, Table 24.2.1, Table 24.3.1, Table 24.4.1, 25.8.3.3
Ceiling pockets, 11.2.8, A.11.2.8.2(4)
Clearance to storage, 11.2.6, 11.2.7, A.11.2.6, A.11.2.7.1
Cloud ceilings, 9.2.7.2.1, 9.2.7.2.3.1
Definition, 3.3.205.4.6
Deflector position, 11.2.4, 11.3.5, A.11.2.4.1.1.4(A) to A.11.2.4.1.3, A.11.3.5.1.2.1 to A.11.3.5.1.4
Hose stream allowance and water supply duration, Table 20.12.2.6
Obstructions to discharge, 11.2.5, 11.3.6, 24.5.3, A.11.2.5.1.2 to A.11.2.5.3.2, A.11.3.6.1.6 to A.11.3.6.3.2
Plastics display/storage, retail stores, 21.9.1(1), 21.9.2(1), 21.9.3(1), 21.9.4(1), 21.9.5(1), 21.9.6(1)
Protection areas, 11.2.2, 11.3.3, A.11.2.2.1, A.11.2.2.2.1, A.11.3.3.1
Rack storage, 25.8.3.3
Sidewall spray, 11.3, A.11.3
Spacing, 11.2.3, 11.3.4
Upright and pendent, 11.2, A.11.2.2.1 to A.11.2.8.2(4)
Extension fittings, 16.8.6
Definition, 3.3.68
Exterior docks, 9.3.18
Exterior projections, 9.2.3, 9.3.19, A.9.2.3, A.9.3.19.1, A.9.3.19.2
Exterior protection, see Exposure protection systems
Extra hazard occupancies, 19.3.1.2.4(3)
Acetylene cylinder charging plants, 22.10.1.2, 26.10.1.2
Compressed gas and cryogenic fluids, storage, use, and handling, 26.11.1.2
Group 1 (EH1), 4.3.5, 4.3.9, 19.3.3.2.7, 21.3.3.1(2), 23.1.1(3), 26.9.1.3, 26.10.1.2, A.4.3.5, A.19.2.2, A.26.6.1, Table A.30.1.3
Definition, 3.3.134.1
Group 2 (EH2), 4.3.6, 4.3.9, 19.3.3.2.7, 21.3.3.1(2), 23.1.1(3), 26.4.1.2(3), 26.4.1.7(2), 26.7.1.1, 26.11.1.2, 26.19.2.2, 26.19.2.5, A.4.3.6, A.26.19.2.5, Table A.30.1.3
Definition, 3.3.134.2
Marine, Table A.30.1.3
Motion picture/television soundstages and production facilities, 26.19.2.2, 26.19.2.5, A.26.19.2.5
Nitrate film, rooms containing, 26.7.1.1
Openings, protection of, 19.3.3.3.5(3)
Oxygen-fuel gas systems, 26.9.1.3
Pipe schedule, 27.5.4, A.27.5.4
Plastics storage, 21.5.2
Spray application areas, 26.4.1.2(3), 26.4.1.7(2)
Sprinkler types used in, 19.3.3.2.7
Control mode density area (CMDA) sprinklers, 21.3.3.1(2), 21.3.5

EDUFIRE.IR

Early suppression fast-response (ESFR) sprinklers, 23.1.1(3)
Extended coverage (EC) sprinklers, 11.2.2.1.3
High temperature sprinklers, 19.3.3.2.6
Pendent/upright sprinklers, Table 10.2.4.2.1(c), 11.2.2.1.3
Quick-response (QR) sprinklers, 10.2.3, 19.3.3.2.2.2
Stationary combustion engines and gas turbines, A.26.6.1
System protection area limitations, 4.5.1(3), 4.5.3, A.4.5.1(3)
Water demand requirements, 19.3.2.2, 19.3.3.1.4(2), 19.3.3.2.2.2, 19.3.3.2.7, 19.3.3.3.5(3)
Eye rods, 17.2.1.5

F

Face sprinklers, 25.5.1.7, 25.8.2.4
Definition, 3.3.71, A.3.3.71
Fans, see Ceiling fans; High volume low speed fans
Fasteners
In concrete, 17.2.2, Tables 18.5.12.2(a) to 18.5.12.2(j), A.17.2.2, A.18.5.12
Earthquake protection, 18.5.11.11, 18.5.12, 18.7, A.18.5.12, A.18.7.8
Powder-driven, 17.2.2.9, A.17.2.2.9.3
In steel, 17.2.3, A.17.2.3.1
In wood, 17.2.4
Fast-response sprinklers, see Early suppression fast-response (ESFR) sprinklers; Quick-response (QR) sprinklers
Feed mains, 16.4.1.3, 18.5.5, A.18.5.5.1 to A.18.5.5.10.2(1)
Definition, 3.3.72
Film
Nitrate, 26.7, A.26.7.1.3 to A.26.7.1.4.6
Rolls, Table A.20.4.2, Table A.20.4.3, Table A.20.4.4, Table A.20.4.5.1, Table A.20.4(b)
Finish, ornamental, 7.2.5.3, see also Ornamental sprinklers
Fire control (definition), 3.3.73
Fire department connections, 16.9.3.1.3, 16.9.5.5, 16.9.6.3, 16.12, 16.15.2, 20.12.2.5, A.16.9.5.5, A.16.12, A.16.15.2.2
Arrangement, 16.12.5, A.16.12.5
Definition, 3.3.74
Exposure fire protection, 8.7.2.2, 8.7.2.3, A.8.7.2.3
Hydrostatic tests, 28.2.1.7, 30.8.1
Marine systems, 30.2.7, 30.4.9, 30.8.1, A.30.2.7.1, A.30.2.7.7
Underground steel pipe used with, 6.1.1.3
Fire protection features, Life Safety Code, D.1.1.1, D.2.1
Fire pumps
Cushion tanks used with, 16.9.5.3
Definition, 3.3.75
Hose demand and, 20.12.2.2, A.20.12.2.2
Marine systems, 30.6.1, 30.7.3, 30.7.4.1, 30.7.4.5, 30.8.3.1, 30.8.3.2, A.30.7.3.3 to A.30.7.3.13
Room/house, 26.27.1.8
Underground pipe, tests of, 6.10.2.4.4
Firestopping, 9.2.1.15.2, 16.3.9.5, 16.8.2.4, 19.3.3.1.5.2, 20.7.2(7), 25.2.4.1.1, 26.22.2.1.2(B)(5)
Fire suppression (definition), 3.3.76
Fittings, 7.4, 16.6.2, 16.8, A.7.4.4, A.16.2.2, A.16.8.2.1 to A.16.8.4
Corrosion-resistant, 16.4.2.1, A.16.4.2.1
Equivalent pipe lengths, 27.2.3
Extension, 16.8.6
Definition, 3.3.68
Grooved, 6.3.5, A.6.3.5.3
Joining with pipe, 7.5, A.7.5.1.2 to A.7.5.4.5
Marine systems, 30.2.4, A.30.2.4.1
Materials and dimensions, Table 7.4.1
Outside sprinklers, 8.7.5
Pressure limits, 16.8.3, A.16.8.3
Reinstallation of sprinklers, 16.2.1.1
Solvent cement, use of, 9.4.1.4
Threaded, 6.3.4, 7.5.1, A.7.5.1.2
Underground piping, 6.2, 6.3, 6.8.1, 6.8.3 to 6.8.5, 6.8.7, 6.8.10, A.6.3.1, A.6.3.5.3
Water-cooling towers, 26.21.2.9.1
Welded, 7.5.2, 16.2.1.1, A.7.5.2.2, A.16.2.2
Fixed guideway transit systems, 26.18
Fixed obstructions, 12.1.10.3.2, 12.1.11.3.2, 12.1.11.3.4
Flammable and combustible liquids, 26.2, Table A.20.4.1, Table A.20.4.2, Table A.20.4.3, Table A.20.4.5.1, Table A.20.4(a), Table A.20.4(b)
Flammable and combustible materials, spray application using, 26.4, A.26.4.1.1 to A.26.4.2.1(7)
Flat ceilings, see Ceilings
Flexible couplings, 18.2, 18.5.5.9, A.18.1, A.18.2
Definition, 3.3.78
Flexible sprinkler hose fittings, 17.4.1.3.3, A.16.2.2, A.17.1.4.1.4, A.17.4.1.3.3, A.18.1
Floor control valve assemblies, 16.9.3.3.2, 16.9.11, 16.10.4.3, 16.10.4.8, 16.13.1, A.16.9.11.5
Floors, see also On-floor storage
Openings, 9.3.5, 18.4, 27.5.1.5, A.9.3.5, A.18.4
Slatted, 27.5.1.5
Spaces under, 9.2.2
Flow-declining pressure characteristics, B.2.1
Flow hydrants, 27.4.5.2(19)
Definition, 3.3.101.2
Flow switch, 16.9.11.1 to 16.9.11.3
Flow tests, 4.6.1.1, 5.2.2.2, 28.2.4, 28.6.2(9), 30.8.2, 30.8.3.1, A.4.6.1.1, A.27.1(6)
Definition, 3.3.80
Flue spaces, see Longitudinal flue spaces; Transverse flue spaces
Flumes, water supply connections from, 5.2.6
Flushing, 16.6, 28.2.1.10
Flushing tests, 6.10.2.1, A.6.10.2.1
Definition, 3.3.82
Flush sprinklers, 7.2.4.3, 7.2.6.2, 10.2.6.1.1.2, 11.2.4.1.1.2, 12.1.8.1.2(1), 16.2.5.2, A.7.2.6.2, A.16.2.5.2
Definition, 3.3.205.3.2
Foamed plastics, see Expanded (foamed or cellular) plastics
Foam-water sprinkler systems, 25.2.3.6.4, 26.27.1.5, 26.34.1.3.3(7), 26.34.2.1.1, 26.35.1.2, 26.35.1.3.2, 26.35.1.3.9, A.26.27.1.5, A.26.35.1.3.2, see also High-expansion foam systems
Food products, Table A.20.4.1, Table A.20.4.2, Table A.20.4.3, Table A.20.4.5.1, Table A.20.4(b)
Formulas, hydraulic, 27.2.2
Foundation walls, piping through/under, 5.1.6.2, A.5.1.6.2
Four-way bracing, 18.3.3, 18.5.8, A.18.3.3, A.18.5.8.1
Definition, 3.3.83, A.3.3.83
Fpw, Tables 18.5.5.2(a) to 18.5.5.2(l), 18.5.9.3, 18.5.9.4, A.18.5.9.5, A.18.5.12.2
Definition, 3.3.84
Frangible construction, 18.4.4, A.18.4.11
Free-flowing plastic materials, 20.4.4.1(2), Table 21.3.1, Table A.20.3, see also Plastics storage
Definition, 3.3.85
Freezers, see Refrigerated spaces
Freezing, protection from, 6.4.2.1, 9.3.9.2, 15.3, 16.4.1, 16.10.4.9, 16.13.4, 26.4.2.1.2, 26.29.2.2, 27.2.4.8.2, A.6.4.2.1.1, A.15.3.1 to A.15.3.4, A.16.4.1.1, A.26.21.1.1.1, A.26.29.2.2, A.27.2.4.8.2, see also Antifreeze systems
Friction loss formula, 27.2.2.1, 27.2.4.8, A.27.2.4.8.2
Frostproof hydrants, 6.10.2.4.2
Definition, 3.3.101.1.1
Fuel-fired heating units, 9.2.2(2), see also Furnaces
Definition, 3.3.86
Furnaces, 26.16, A.26.16.2.1, A.26.16.2.6, see also Heating systems
With composite wood joist construction, 9.3.1
Industrial, 9.3.8, A.9.3.8
Residential areas, sprinklers protecting, Table 9.4.2.5(c)

EDUFIRE.IR

Furniture and bedding, Table A.20.4.1, Table A.20.4.3, Table A.20.4.4, Table A.20.4.5.1, Table A.20.4(b)
Fur storage vaults, see Vaults
Fusible elements, 8.3.1.4

G

Garages
Parking, 16.9.11.4
Private, 16.3.9.6.2
Gaseous agent extinguishing systems, 26.4.1.7(1)
Gases, Table A.20.4(a), see also Nitrogen
Air, substituted for, 4.8
Cylinder storage, see Cylinders
Liquefied natural gas (LNG), production, storage, and handling of, 26.13
LP-Gas at utility gas plants, 26.12
Gas turbines, installation and use of stationary, 26.6, A.26.6.1
Gate valves, 16.9.3.2.1, 16.9.3.2.3, 16.9.3.3.3, 26.27.2.1.3(3)
Gauges, see Pressure gauges
Generators
Emergency, 26.27.1.7
Turbine, see Turbine-generators
Glass
Atrium walls, D.1.1.1.1, D.2.1.2.1
Sprinkler-protected glazing, 9.3.15, 19.4.4, A.9.3.15
Windows, see Window protection
Glazing, sprinkler-protected, see Glass
Graph sheets, 27.4.4, A.27.4.4
Gratings, sprinklers under, 9.5.5.3.1.1, 9.5.5.3.4, 10.2.7.3.3, 11.2.5.3.4, 12.1.10.3.3, 12.1.11.3.3, 13.2.8.3.3, 14.2.11.3.4, A.9.5.5.3.1.1, A.9.5.5.3.4
Gravity chutes, 26.15.2.2.1, 26.15.2.2.3
Gravity tanks, 5.2.5, 16.9.6.5, A.16.9.6.5
Gridded sprinkler systems
Definition, 3.3.206.5, A.3.3.206.5
Hydraulic calculation procedures, 27.2.4.5, A.27.2.4.5
Preaction systems, 8.3.2.6
Grooved connections, 6.3.5, A.6.3.5.3
Groove joining methods, 7.5.3, A.7.5.3.1
Ground floors, spaces under, 9.2.2, 9.3.18
Grounding, electrical, 16.16, A.16.16.2
Guest rooms or suites, D.1.1.4, D.1.1.5, D.2.17.2, D.2.18.2

H

Hangars, aircraft, 26.24
Hangers, 8.10.10, Chap. 17
Branch lines, location on, 17.4.3, A.17.4.3.2 to A.17.4.3.6
Component material, 17.1.7
Corrosion-resistant, 16.4.2.1, A.16.4.2.1
Definition, 3.3.89
Distance between, maximum, 17.4.2, A.17.4.2
Earthquakes, subject to, 30.2.5.1(6)
Fasteners
In concrete, 17.2.2, A.17.2.2
In steel, 17.2.3
In wood, 17.2.4
Installation, 17.4, A.17.4
Mains, location on, 17.4.4, A.17.4.4.8
Marine systems, 30.2.5.1(5), 30.2.5.1(6), 30.2.5.3, A.30.2.5.3
Non-system components, support of, 17.1.3, A.17.1.3.1
Post-installed anchors, 17.2.2, A.17.2.2
Powder-driven and welding studs, 17.2.2.9, 17.2.3.1, 18.7.7, A.17.2.2.9.3
Risers supported by, 17.4.5, A.17.4.5.3, A.17.4.5.4.2
Rods, see Rods
Trapeze, 17.3, 17.4.1.3.2, 17.4.4.7, A.17.3
U-hooks, see U-hooks
Water-cooling towers, 26.21.2.9.1
Hardware, Chap. 7
Hazardous areas
Protection of piping in, 16.4.3, A.16.4.3
Residential board and care occupancies, D.1.1.8.1, D.2.22.2.1
Hazardous materials, storage at piers, wharves, and terminals of, 26.22.1.4
Hazardous Materials Code, 22.36, 26.36
Hazards, adjacent, 20.10, A.20.10
Hazards, classification of, see Occupancy classifications
Hazen-Williams formula, 27.2.1.4, 27.2.2.1.1, 27.2.3.2, 27.2.4.8.1, A.27.2.1.4, A.27.2.4.8.2, B.2.1.3
Heat detectors, 26.21.2.7, 26.34.2.1.3.1 to 26.34.2.1.3.3
Heating systems, see also Furnaces
Sprinklers near components, 9.4.2.5, Table 9.4.2.5(a), Table 9.4.2.5(c)
Unit heaters, sprinklers installed below, 14.2.11.2(1)
Heat-producing devices, see also Furnaces
With composite wood joint construction, 9.3.1
Residential areas, sprinklers protecting, 9.4.2.5(8)
Heat-responsive devices, preaction and deluge systems, 8.3.1.4
Heat-sensitive materials, 30.4.10, A.30.4.10.1(4)
Definition, 3.3.119.4, A.3.3.119.4
Heel (definition), 3.3.119.5
Heel angle, 30.2.5.1(3)
Definition, 3.3.119.6
Hexagonal bushings, 16.3.12.2, 16.8.5.2, 16.8.5.3, 29.4.2, A.16.3.12.2
High-bay records storage, protection of, 23.12.1, A.23.12.1
High-challenge fire hazards, 3.3.94
Definition, 3.3.94
High-expansion foam systems, 20.9, A.20.9, C.5, C.9
Idle pallets, protection of, 20.14.2.2.3, 20.14.2.2.4.1(3)
Rack storage, 25.2.3.6.3
Roll paper storage, 20.5.5.2.1, 21.7.6, 21.7.7
Rubber tire storage, 20.15.2.5, Table 21.6.1(a), 25.2.3.6.3
High-piled storage, 4.3.7, 4.5.1(4), 4.5.3, Table 10.2.4.2.1(d), 11.2.2.1.3
Definition, 3.3.95
High-rise buildings, see Buildings, multistory
High temperature-rated sprinklers, 9.4.2.3 to 9.4.2.5, 14.2.6, 19.3.3.2.6, A.9.4.2.5, A.20.10, C.14
Alternative sprinkler system designs, 24.3.3
Control mode density area (CMDA) sprinklers, 21.1.8, 21.2.2.2, Figs. 21.4.1.2(a) to 21.4.1.2(e), 21.7.4, 21.8.1.2(1), 25.2.3.1.8, A.21.7.4
Control mode specific application (CMSA) sprinklers, 13.2.3.2 to 13.2.3.4
In-rack, 25.3.3, A.25.2.3.3.1, A.25.2.3.5
Oxidizer solids and liquids storage, 26.36.1.3.2
Plastic pallets, protection of, 20.14.2.2.4.1(2)
Roll paper storage, 21.7.4, A.21.7.4
High volume low speed fans, 19.2.7, 20.6.7, A.14.2.11.2, A.20.6.7
Definition, 3.3.93
High water level protection, dry pipe systems, 8.2.5.4
Hoods, sprinklers in, 8.9.2 to 8.9.7, 26.32.1.1, A.8.9.2
Horizontal barriers, 25.3.5.1, 25.3.5.2, 25.7, 25.8.1.4, 25.8.1.7.1, 25.8.3.2, Table 25.9.2.2.1, 26.36.1.3.4.4(B), A.25.7.1
Definition, 3.3.96
Horizontal ceiling, see Ceilings
Horizontal channels, Table 21.6.1(a), 26.22.2.1.2
Definition, 3.3.98
Horizontal flue spaces, C.13, C.26
Hose
Abandoned in place, 29.2.2
Flexible sprinkler hose fittings, 17.4.1.3.3, A.16.2.2, A.17.4.1.3.3
Hydraulic calculations, 27.3
Miscellaneous storage, Table 4.3.1.7.1
Outside, Table 4.3.1.7.1, 20.12.2.3, 27.3
Small, 16.15.1, 20.11.1, A.16.15.1.1, A.16.15.1.4, C.5
Water supply allowance, 19.2.6, 20.12, A.20.12.2.1, A.20.12.2.2
Hose connections, 4.4, 16.15, 19.2.6.2, 19.2.6.3, 20.11, A.16.15.1.1 to A.16.15.2.2, A.20.11
Fire department, see Fire department connections
Marine systems, 30.4.9, 30.8.1

EDUFIRE.IR

Rack storage protection, 25.2.2.1.4
Small hose, 16.15.1, 20.11.1, A.16.15.1.1, A.16.15.1.4, C.5
Storage, 20.12.2.4
Hose houses, 27.1.3(45)
Definition, 3.3.100
Hose stations, 26.27.2.1.3, 26.27.2.4
Hose streams, 19.2.6.4(3), 20.12, 28.5.3(6), A.20.12.2.1, A.20.12.2.2, C.8
Aircraft engine test facilities, 26.26.1.2.1
Alternative sprinkler system designs, 24.1.7(5), 24.4
Ceiling sprinklers, 25.2.1.6
Concealed spaces, 19.4.3.4.3
Liquefied natural gas, production, storage, and handling of, 26.13.1
Marine systems, 30.5.3, A.30.5.3
Multiple hazard classifications, systems with, 20.10.4, A.20.10.4(3)
Nuclear power plants, 26.27.1.1, 26.28.1(2), A.26.27.1.1
Oxidizer solids and liquids, Table 26.36.1.3.4.1(B), Table 26.36.1.3.4.3
Plastics storage, 21.9, A.23.7
Rack storage systems, 25.2.3.6.4, 25.8.2.8, A.23.7
Residential sprinklers, 19.4.1.6
Roll paper storage, 20.5.5.2.1
Rubber tire storage, 25.2.3.6.4
Spray application areas, 26.4.1.4
Utility LP-Gas plants, 26.12.1.2, 26.12.1.3
Water-cooling towers, 26.21.1.7.3
Hose valves, 20.12.2.5, 29.2.2
Hospital clothes closets, 9.2.5, A.9.2.5
Hotels, D.1.1.4, D.1.1.5, D.2.17, D.2.18
Housing materials, Table A.20.4.1, Table A.20.4.2, Table A.20.4.3, Table A.20.4.4, Table A.20.4.5.1, Table A.20.4(b)
Hydrant butts, 27.1
Definition, 3.3.102
Hydrants, 6.8.1, 6.8.3 to 6.8.5, 6.8.7, 6.10.2.4.1, 6.10.2.4.2, 16.15.1.3(1), 20.12.2.3, 26.27.2.1, 26.35.1.3.9, A.26.27.2.1.2
Definition, 3.3.101
Hydraulically calculated water demand flow rate, 19.3.1.1, 19.3.3, A.19.3.1.1, A.19.3.3.1.4(1) to A.19.3.3.4.2
Definition, 3.3.103
Hydraulically designed systems, see also Design, sprinkler system; Hydraulic calculations
Advanced light water reactor electric generating plants, 26.27, A.26.27.1.1 to A.26.27.2.1.2
Alternative sprinkler system designs, 24.1.2.1, 24.1.2.2, 24.4, 24.5.2, 24.5.3.1
Definition, 3.3.104
Deluge systems, 8.3.3.2
Existing system modifications, 29.1.4, 29.5, 29.6.2(2), 29.6.4, 29.6.5, 29.6.6
Exposure systems, 8.7.9.1, 8.7.9.2, 19.4.2.1, A.19.4.2.1
Fire department connections, 16.12.4(3)
Information signs, 28.5, A.28.5
K-factors less than K 5.6, 9.4.4.2(1)
Marine systems, 30.5.1.1, 30.7.3.3, A.30.7.3.3
Rack storage, 27.2.5
Residential sprinklers, 19.4.1.1 to 19.4.1.3, A.19.4.1.2
Roll paper storage, 23.9
Storage, general requirements for, 20.12.2.6
Hydraulic calculations, Chap. 27
Advanced light water reactors, 26.27.2.3(2)
Aircraft engine test facilities, 26.26.1.2.2
Airport terminals, 26.25.1.4
Cartoned records storage, 21.11.6.5
Coal mines, 26.34.1.2.1
Computer-generated hydraulic reports, 27.4.5.6
Equivalent pipe lengths, valves and fittings, 27.2.3
Extension fittings, inclusion of, 16.8.6.5
Forms, 27.4, A.27.4.2 to A.27.4.5.1
Formulas, 27.2.2
Graph sheets, 27.4.4, A.27.4.4
Metal/nonmetal mines, 26.35.1.1.1
Methods, 19.3.1.1, 19.3.3, A.19.3.1.1, A.19.3.3.1.4(1) to A.19.3.3.4.2
Procedures, 27.2, A.27.2.1 to A.27.2.4.10, B.2.1.3
Rack storage, 23.2.1.6, 23.6.3, 23.7.5, 25.2.1.3, 25.8.1.1, 25.8.2.6, 25.8.3.5, 25.12.1.2, 25.12.1.4, 25.12.1.5, 27.2.5
Reports, 27.4.5, A.27.4.5.1
Retail stores,storage/display in, 21.9
Symbols, 1.6.2
Terminals, piers, and wharves, 26.22.2.1.2(B)
Water curtains, 19.4.3
Water supply requirements, 19.2.3
Hydraulic junction points, 27.2.2.4
Hydraulic release systems, 8.3.1.5
Hydrostatic tests, 6.10.2.2, 28.2.1, 30.8.1, A.6.10.2.2.1 to A.6.10.2.2.6, A.28.2.1
Definition, 3.3.105
Hyperbaric chambers, Class A, 26.17, A.26.17.1.5, A.26.17.1.8
Hypobaric facilities, 26.33, A.26.33.1.11

I

Identification, see also Signs
Fire department connections, 16.12.5.6, 16.12.5.8
Pipe, 7.3.4, A.7.3.4.1, A.16.4.2
Sprinklers, 7.2.1, 7.2.2.1, A.7.2.1, A.7.2.2.1, Table A.16.17
Valves, 16.9.3.5, 16.9.12, 30.2.6.3, A.16.9.12
Idle pallets, see Pallets
Impairments, A.31.1
Incinerators, systems, and equipment, 26.15, A.26.15.2.2
Indicating valves, 8.2.4.4, 8.9.9, 16.9.3.1.1, 16.9.3.1.2, 16.9.3.2, 16.9.4.1, 16.9.6.1, 16.9.6.5, 16.9.8.4, 16.11.6, A.16.9.6.5
Cleanrooms, 26.23.2.4
Combined dry pipe-preaction systems, 8.4.3.5, 8.4.3.7
Definition, 3.3.106, A.3.3.106
In-rack sprinkler systems, 25.1.3.2, A.25.1.3.2
Spray application areas, 26.4.1.6
Yard mains, hydrants, and standpipes, 26.27.2.1.1
Industrial occupancies, high-rise, D.1.1.11, D.2.27.1.1
Industrial ovens and furnaces, 9.3.8, A.9.3.8
Information technology equipment, 26.14, A.26.14.2.4
In-rack sprinklers, 4.5.4, 9.4.3.4, Chap. 25, 27.2.5, A.20.13.2.2, Annex C, see also Horizontal barriers
Alternative sprinkler system designs, 24.1.3, 24.1.5, 25.8, A.25.8.2.11.1
Cartoned records storage, 21.11.6.3.3, 21.11.6.4.1, 21.11.6.4.4, 21.11.6.5.2, Figs. A.21.11.6.3.5(a) to A.21.11.6.3.5(c)
Ceiling-level sprinklers, design criteria for use with, 25.12
Characteristics, 25.3
Columns, protection for, 20.15.1(1), 20.15.2.3, 20.15.2.5, A.20.15.1
Early suppression fast-response (ESFR) sprinklers, 25.8.2.3
Flow/pressure, 25.12.3
Hose connections and, 16.15.1.3(5)
Location, 10.2.5.4.3, 25.4, 25.5.1, A.25.4.2.1, A.25.4.4, A.25.5.1.2, A.25.5.1.6
Low-piled storage, 4.3.1.5.1, 4.3.1.5.2
Miscellaneous storage, 4.3.1.7.1.1, 4.3.1.8, 25.2.2.1
Obstructions to sprinkler discharge, 25.4.1, 25.4.3, A.25.2.1.2
Operating sprinklers, number of, 25.12.2
Oxidizer solids and liquids storage, 26.36.1.3.3, 26.36.1.3.4.2(A), 26.36.1.3.4.4
Pipe
Hangers, 17.4.1.2
Size, 27.2.5.1
Plastics storage, 4.3.1.5.2, Table 20.15.1, 23.6.1.2, Chap. 25, C.19
Quick response (QR), see Quick-response (QR) sprinklers
Refrigerated spaces, 8.8.2.8.3, 8.8.2.8.4
Seismic protection, 18.2.4, A.18.1, A.18.2.4

EDUFIRE.IR

Spacing, 25.4, 25.5.2, 26.36.1.3.4.2(A)(2), 26.36.1.3.4.4(E), A.25.4.2.1, A.25.4.4, A.25.5.2.2.1, A.25.5.2.2.3
Tire storage, 20.15.2.3, 20.15.2.5
Water demand, 27.2.5.2, A.25.2.3.3.1
Water shields, 25.3.5
Inspections, 28.3, Chap. 31
Automated inspection and testing, 28.3
Definition, 3.3.9
Cleanrooms, 26.23.2.5
Marine systems, 30.9
Installation, see also Location requirements, sprinkler; Spacing, sprinklers
Control mode specific application (CMSA) sprinklers, Chap. 13
Early suppression fast-response (ESFR) sprinklers, Chap. 14
Extended coverage upright, pendant, sidewall spray sprinklers, Chap. 11
Fire protection features, Life Safety Code, D.2.1.2
Fittings, 16.8, A.16.8.2.1 to A.16.8.4
Hanging and support of system piping, Chap. 17
Piping, Chap. 6, Chap. 16
Protection area per sprinkler, 10.2.4, 10.3.3, 11.2.2, 11.3.3, 13.2.5, 14.2.8, A.11.2.2.1, A.11.2.2.2.1, A.11.3.3.1, A.13.2.5, A.14.2.8.2.3
Residential sprinklers, Chap. 12
Seismic protection, Chap. 18
Special sprinklers, Chap. 15
Standard pendent, upright, and sidewall spray sprinklers, Chap. 10
Underground piping, Chap. 6
Waterflow alarms, 7.7
Installation orientation (definition), 3.3.205.3
Institutional sprinklers (definition), 3.3.205.4.7
Instructions, system, 28.4, 30.9, A.28.4(2)
Intermediate level sprinklers, 9.5.5.3.1.3, 9.5.5.3.4, 10.2.7.3.3, 11.2.5.3.4, 11.2.5.3.5, 14.2.11.3.4, 21.11.6.3, 25.3.5, A.9.5.5.3.4, A.21.11.6.3.5, C.3
Definition, 3.3.205.4.8
Intermediate temperature-rated sprinklers, 9.4.2.4, 9.4.2.5, 14.2.6, A.9.4.2.5, C.14
Control mode density area (CMDA) sprinklers, 21.1.8.1, 21.1.9, 21.8.1.2(1), 25.2.3.1.8.1, 25.2.3.1.9
Control mode specific application (CMSA) sprinklers, 13.2.3.2, 13.2.3.3
Early suppression fast-response (ESFR) sprinklers, 23.7.4, A.23.7
In-rack, 25.3.3, 25.8.3.3, A.25.2.3.5
Marine systems, 30.4.1
International shore connections, 30.2.7, 30.8.1, A.30.2.7.1, A.30.2.7.7
Definition, 3.3.119.7, A.3.3.119.7

J

Joints, 7.5, 16.9.11.5, A.7.5.1.2 to A.7.5.4.5, A.16.9.11.5
Brazed and soldered, 7.5.4, A.7.5.4
Building expansion, 18.2.3.1(4), A.18.2.3.1(4)
End treatment, 7.5.6
Groove joining methods, 7.5.3, A.7.5.3.1
Restraint, 6.6.2, A.6.6.2
Underground pipe, 6.3.5, 6.8.2, A.6.3.5.3
Welded, 7.5.2, A.7.5.2.2
Joists, see Wood joist construction

L

Laboratories
Chemicals, using, 26.8
Nitrate film, 26.7.2.3
Laced tire storage, Fig. A.3.3.185(g)
Definition, 3.3.111
Lakes, water supply connections from, 5.2.6
Landings, 9.3.4.1.2, 9.3.4.1.3, 9.3.4.2.1, 9.3.4.2.3, A.9.3.4.1.2
Lateral braces, 18.5.5, 18.5.7.1, 18.5.9.6, A.18.5.5.1 to A.18.5.5.10.2(1), A.18.5.8.1, A.18.5.9.6, Annex E
Definition, 3.3.112
Libraries, 9.3.7, 26.29, A.9.3.7, A.26.29.1.1 to A.26.29.2.3
Life Safety Code, Annex D
Light fixtures
Sprinkler distance from, Table 9.4.2.5(c), 10.3.6.1.2, 10.3.6.1.3, 11.3.6.1.2, 11.3.6.1.3
Sprinklers obstructed by, 14.2.11.1.1, 14.2.11.2(1), 14.2.11.3.1(1), A.14.2.11
Light hazard occupancies, 4.3.2, 16.3.9.6, 16.3.10.1, 19.3.1.2.4(1), 19.3.2.7, A.4.3.2
Adjacent hazards, A.20.10.4(3)
Cloud ceilings, 9.2.7.2.3
Compact storage, 21.12.1, A.21.12.1
Concealed spaces, 9.3.17.1.1, A.9.3.17.1.1
Cultural resource properties, 26.29.1.1, A.26.29.1.1
Definition, 3.3.134.3
Early suppression fast-response (ESFR) sprinklers, 14.2.7
Existing system modifications, 29.3.3 to 29.3.5
Fire department connections, 16.15.2.1
Marine, Table A.30.1.3
Open-grid ceilings, 9.3.10(1)
Openings, protection of, 19.3.3.3.5
Pipe schedule, 27.5.2, A.27.5.2.6
Sprinkler types used in, 16.8.6.2
Control mode specific application (CMSA) sprinklers, 13.2.4.1, 22.1.1(1)
Early suppression fast-response (ESFR) sprinklers, 23.1.1(2)
Extended coverage (EC) sprinklers, 11.2.4.1.1.4, 11.2.5.2.2, 11.3.2(1), 11.3.6.2.2, A.11.2.4.1.1.4(A), A.11.2.4.1.1.4(B), A.11.3.6.2.2.1
Exterior projections, 9.2.3.3(2)
K-factors less than K-5.6, 9.4.4.2, 9.4.4.4
Pendent/upright sprinklers, Table 10.2.4.2.1(a), 10.2.6.1.1.3, 10.2.7.2.1.4, 10.2.7.2.2.1, 11.2.4.1.1.4, 11.2.5.2.2, A.10.2.7.2.1.4, A.10.2.7.2.2.1, A.11.2.4.1.1.4(A), A.11.2.4.1.1.4(B)
Quick-response (QR) sprinklers, 9.4.3.6, 19.3.3.2.3.1(2)
Residential sprinklers, 9.4.3.6
Sidewall sprinklers, 10.3.2(1), 10.3.6.2.2, 11.3.2(1), 11.3.6.2.2, A.10.3.6.2.2.1, A.11.3.6.2.2.1
Special sprinklers, 15.2.2(3)
Thermal sensitivity, 9.4.3.1, 9.4.3.6, A.9.4.3.1
System protection area limitations, 4.5.1(1), 4.5.3
Water demand requirements, 19.3.3.1.4(1), 19.3.3.1.5.2, 19.3.3.3.5, 19.4.3.4.3
Lighting fixtures, sprinklers obstructed by, 13.2.8.3.2
Lightning protection, 16.16.2, A.16.16.2
Limited area systems, 4.1.2
Limited care facilities, 9.2.4.1.2
Limited-combustible material (definition), 3.3.114, A.3.3.114
Linen handling systems, 26.15, A.26.15.2.2
Lines, branch, see Branch lines
Lintels, 10.3.5.1.3, 11.3.5.1.3, A.10.3.5.1.3.2, A.10.3.5.1.3.3, A.11.3.5.1.3.1, A.11.3.5.1.3.2
Liquefied natural gas (LNG), production, storage, and handling of, 26.13
Liquids, see Flammable and combustible liquids
Listed
Additives, 7.8.1
Anchors, A.18.5.12
Definition, 3.2.3, A.3.2.3
Escutcheons and cover plates, 7.2.6, A.7.2.6.2
Fasteners, A.18.5.12.3
Flexible couplings, see Flexible couplings Hangers, 17.1.6, A.17.1.6.1 to A.17.1.6.3
Pipe and tubing, 7.2.2.2, 7.3.1 to 7.3.3, 7.4.3, 7.4.4, 7.5.2.3.1, 7.5.3.1.1, 7.5.3.2, 7.5.4.1, 7.5.5.1, 7.5.6.2, 7.8.2, 16.1.2, 16.3.8.4, 16.3.9.1, 16.3.9.2, 16.3.9.6.1, 16.3.10, 16.8.2.1, 16.8.3.5, 16.8.4.2, A.7.3.3, A.7.5.2.3.1, A.16.8.2.1
Underground pipe, 6.1.1.1, 6.1.1.2, 6.2.1.2, 6.3.3
Sprinklers, 9.4.3.3, 9.4.3.5, 11.2.4.1.2(4)
Guards, 16.2.6
Occupancy limitations, 7.2.3

EDUFIRE.IR

Ornamental finishes, 7.2.5.3.2
Residential, 12.1.1, 12.1.6, 12.1.7.3, A.12.1.1, A.12.1.6
Strainers, 9.4.4.2(3)
System components and hardware, 7.1.1, A.7.1.1
Valves, 7.6.1, 16.9.3.1.1, 16.9.3.1.2, 16.9.3.2, 16.9.3.3.5, 16.9.4.1, 16.9.4.2, 16.9.6.5, 16.12.6.1, 26.4.1.6, A.16.9.6.5
Waterflow alarms, 7.7, 16.11.3.2.1
Lithium batteries, A.20.4, Table A.20.4(a)
Location requirements, sprinkler, 8.10.3.1, 8.10.7, 8.10.9, Chap. 9
Allowable sprinkler omission requirements, 9.2, A.9.2.1 to A.9.2.10
Basic requirements, 9.1, A.9.1
In-rack sprinklers, 25.4, A.25.4.2.1, A.25.4.4
Protection area per sprinkler, 9.5.1.2, 9.5.1.3, 9.5.2
Special situations, 9.3, A.9.3.3.2 to A.9.3.20.1
Use of sprinklers, 9.4, A.9.4.1.1 to A.9.4.3.1
Lodging houses, D.1.1.3, D.2.16
Longitudinal braces, 18.5.6, 18.5.7.1, 18.5.9.6, 18.5.11.6, A.18.5.8.1, A.18.5.9.6
Definition, 3.3.115
Longitudinal flue spaces, 20.5.3.1.2, 20.5.3.3.1, 20.15.1, 23.11.1, 25.5.1.2, 25.5.1.10, 25.6.4.3, 25.8.1.4.2, 25.8.1.7, 25.8.3.2.5(2), 25.8.3.3.2(A), Table 25.9.2.2.1, Table 25.9.2.3.1, 25.9.5.2, 25.9.5.3, A.20.15.1, A.25.2.3.3.1, A.25.5.1.2, C.11, C.13, C.16
Carton records storage, 21.11.2
Control mode density area (CMDA) sprinklers, 21.8.1.2(6)
Definition, 3.3.116, A.3.3.116
Early suppression fast-response (ESFR) sprinklers, 23.7.8.3
High bay records storage, 23.12.3
Oxidizer solids and liquids storage, 26.36.1.3.3(C)
Plastics display/storage, retail stores, 21.9.1(7), 21.9.1(12), 21.9.5(5), 21.9.5(7)
Slatted shelves, 23.13.2(4)
Looped sprinkler systems, A.6.10.2.1, see also Circulating closed-loop sprinkler systems
Definition, 3.3.206.6, A.3.3.206.6
Louver ceilings, see Open-grid ceilings
Low-piled storage, 4.3.1.3, 4.3.1.5, 4.3.1.7, 4.3.1.8, 20.1.1, 25.2.2.2, A.25.2.2.2.1(2)
Definition, 3.3.118, A.3.3.118
Low-pressure blowoff valves, 9.4.2.5(3)
LP-Gas, storage and handling at utility gas plants, 26.12

M

Machine rooms, elevator, 9.2.13, 9.3.6, A.9.3.6.1 to A.9.3.6.5
Main drains, 16.10.4, 16.13.1, A.16.10.4.6
Main drain valves
Multistory buildings, 16.9.11.1 to 16.9.11.3
Test, 28.2.3.4, A.28.2.3.4.2
Mains, 20.12.2.3, 27.5.2.2.2, see also Cross mains; Feed mains; Private fire service mains; Yard mains
Cultural resource properties, 26.29.2.1, A.26.29.2.1
Hangers, location, 17.4.4, A.17.4.4.8
Hose allowance, 19.2.6.2
Nuclear power plants, 26.27.1.2, 26.27.2.1, A.26.27.2.1.2
Size of, 5.1.3, A.5.1.3
Sway bracing, 18.5.5, A.18.5.5.1 to A.18.5.5.10.2(1), Figs. A.18.5.9(a) to A.18.5.9(d)
Maintenance, system, Chap. 31
Cleanrooms, 26.23.2.5
Marine systems, 30.9
Marine systems, Chap. 30
Acceptance, 30.8
Definitions, 3.3.119, A.3.3.119.4 to A.3.3.119.9
Design approaches, 30.5, A.30.5.2, A.30.5.3
Fire department connections, 30.2.7, A.30.2.7.1, A.30.2.7.7
Installation requirements, 30.4, A.30.4.2 to A.30.4.12.1
International shore connections, 30.2.7, 30.8.1, A.30.2.7.1, A.30.2.7.7
Maintenance, 30.9
Occupancy classifications, 30.1.3, A.30.1.3, A.30.1.4
Partial installation, 30.1.4, A.30.1.4
Piping, 30.2.2, 30.2.4, 30.2.5, 30.3.3, 30.4.10, 30.7.4.5, A.30.2.2, A.30.2.4.1, A.30.2.5.1 to A.30.2.5.4, A.30.4.10.1(4)
Plans and calculations, 30.6, A.30.6.4
Requirements, 30.3, A.30.3.1
Spare sprinklers, 30.2.3
System components, hardware, and use, 30.2, A.30.2.1 to A.30.2.7.7
Valves, 30.2.6, 30.7.4.2, A.30.2.6.1
Water supplies, 30.7, A.30.7.2.7 to A.30.7.4.6
Definition, 3.3.119.10
Marine thermal barriers, 30.4.10.1, A.30.2.2, A.30.2.5.3, A.30.4.10.1(4)
Definition, 3.3.119.9, A.3.3.119.9
Measurement, units of, 1.6.1, A.1.6.1.4
Mechanical damage, protection from, 6.4.2.2, 8.16.5, 16.2.6, 16.5
Mechanical dry pipe valve (definition), 3.3.206.4.2, see also Dry pipe valves
Mercantile occupancies, D.1.1.9, D.1.1.10, D.2.23, D.2.24
Metal/nonmetal mining and metal mineral processing facilities, 26.35, A.26.35.1.2 to A.26.35.1.3.4
Meters, 5.1.7, A.5.1.7
Mezzanines, 4.5.2, 27.5.1.5, D.2.3.1.1(1), D.2.4.1.1(1)
Microbiologically influenced corrosion (MIC), 4.2(4), 7.8.2, 29.1.8, A.4.2(4), A.4.7, A.28.2.1.6
Mines
Coal, 26.34, A.26.34.1.1.1, A.26.34.1.3.3(8)
Metal/nonmetal mining and metal mineral processing facilities, 26.35, A.26.35.1.2 to A.26.35.1.3.4
Miscellaneous storage, 4.3.1.3, 4.3.1.4, 4.3.1.6 to 4.3.1.8, 20.1.1,
Table 20.12.2.6, A.4.3.1.4
Definition, 3.3.123, A.3.3.123
Density/area method, 4.3.1.7.1
Discharge criteria, Table 4.3.1.7.1
In-rack sprinklers, 4.3.1.7.1.1, 4.3.1.8, 25.2.2.1
Tires, 4.3.1.6, Table 4.3.1.7.1
Definition, 3.3.124
Mixed commodities, 20.4.14
Mixing rooms, sprinklers for, 16.2.4.1, 26.4.1.5
Mobile high bay records storage, 23.12.1, A.23.12.1
Modifications, existing system, Chap. 29
Motion picture studio soundstages and production facilities, 26.19, A.26.19.2.4, A.26.19.2.5
Motor vehicle components, see Automotive components on portable racks
Movable racks, 20.5.2, Fig. A.3.3.171(k)
Definition, 3.3.125
Moving stairways, 9.3.5, A.9.3.5
Multicycle systems, 8.5
Definition, 3.3.206.7
Multiple-row racks, Table 4.3.1.7.1, 20.5.3.1.2, 25.4.7.1, 25.5.1.9, 25.5.2.2.2, Fig. A.3.3.171(f), A.25.2.3.3.1, C.14
Alternative sprinkler system designs, 24.3.1, 24.3.2, 25.8.1.8, 25.8.1.9, 25.8.2.1, Fig. 25.8.2.4(f), Table 25.8.2.6, 25.8.3.3.3, 25.8.3.4
Ceiling sprinklers, 23.1.4, 25.2.1.2, 25.2.1.5, 25.2.3.2.2, 25.2.3.3.2, A.21.4.1.1, A.25.2.1.2
Control mode density area (CMDA) sprinklers, 21.4.1.1, 21.4.1.2.1(D), 21.4.1.3, 21.5, A.21.4.1.1, C.21, C.22
Control mode specific application (CMSA) sprinklers, 22.1.6, 22.4, 22.5, Table 25.2.4.2.1, Table 25.2.4.3.1, A.22.1.6
Definition, 3.3.127, A.3.3.171(3)
Early suppression fast-response (ESFR) sprinklers, 23.1.4, 23.5.1, 23.6.1, 23.7.1

EDUFIRE.IR

Flue space, 20.5.3.3.1.1, 20.5.3.3.2.1, C.13
In-rack sprinkler location, 25.4.6.2, 25.8.1.8.1, 25.8.3.3.3(A), 25.9.2.3, 25.9.4.3.1, A.25.4.4, A.25.9.2.3.1
In-rack sprinkler spacing, Table 25.5.2.2.3, 25.8.1.8.2, 25.8.3.3.3(B)
Rubber tire storage, Table 21.6.1(a)
Multistory buildings, see Buildings, multistory
Museums, 26.29, A.26.29.1.1 to A.26.29.2.3

N

National Electrical Code, 26.30
Net vertical force, 18.5.10
Definition, 3.3.128
New technology, 1.7
Nitrate film, 26.7, A.26.7.1.3 to A.26.7.1.4.6
Nitrogen
Air, substituted for, 4.8
Pressurized systems, 8.2.6.2, 8.2.6.8, 8.8.2.4, 8.8.2.7, A.8.2.6.8.1, A.8.8.2.4, A.8.8.2.7.1
Noncombustible material (definition), 3.3.129
Nonfire protection connections to sprinkler systems, 27.1.5, A.27.1.5
Nonsprinkler system components, support of, 4.9, A.4.9
Normal pressure formula, 27.2.2.3
Nozzles (definition), 3.3.205.4.9, see also Spray nozzles
Nuclear power plants, light water, 26.27, 26.28, A.26.27.1.1 to A.26.27.2.1.2
Nursing homes, 9.2.4.1.2

O

Obstructed construction, 10.2.6.1.2, 11.2.1, Table 11.2.2.1.2, 11.2.4.1.2, 11.3.2(7), Table 13.2.5.2.1, 13.2.6.1.1, 13.2.7.1.2, 14.2.4, 14.2.10.1.6, 24.1.7(3), A.14.2.4, see also Obstructions to sprinkler discharge
Definition, 3.3.41.1, A.3.3.41.1
Obstructions to sprinkler discharge, 9.5.5, 10.2.7, 10.3.2(6), 10.3.6, 11.3.6, 14.2.11, A.9.5.5.1 to A.9.5.5.3.4, A.10.2.7.1.2 to A.10.2.7.3.2, A.10.3.6.1.6 to A.10.3.6.3.2, A.11.3.6.1.6 to A.11.3.6.3.2, A.14.2.11, A.22.1.6, see also Early suppression fast-response (ESFR) sprinklers; Pendent sprinklers; Sidewall sprinklers; Upright sprinklers
Alternative sprinkler system designs, 24.5
Continuous obstruction, 9.5.5.2.1, 10.2.7.2.1.1, 10.3.6.2.1.1, 10.3.6.3.1, 11.2.5.2.1.1, 11.2.5.2.1.2, 11.2.5.3.1, 11.3.6.1.4, 11.3.6.2.1.1, 11.3.6.3.1, 12.1.10.3.1, 12.1.11.2.1.1, 12.1.11.3.1, 13.2.8.2.1.1, 13.2.8.3.1, 14.2.11.3, A.11.2.5.2.1.3, A.11.3.6.2.1.3, A.13.2.8.2.1.3
Definition, 3.3.133.1
Control mode specific application (CMSA) sprinklers, 13.2.8
Double joist, 10.2.6.1.5
Earthquake damage, protection of piping from, 18.1.3
Extended coverage (EC) sprinklers, 11.2.5, A.11.2.5.1.2 to A.11.2.5.3.2
Fixed, 9.5.5.3.1, 10.2.7.3.2, 10.3.6.3.2, 11.2.5.3.2, 11.3.6.3.2, A.9.5.5.3.1, A.10.2.7.3.2, A.11.2.5.3.2, A.11.3.6.3.2
Hazard, discharge prevented from reaching, 9.5.5.3, 10.2.7.3, 10.3.6.3, 11.2.5.3, 11.3.6.3, 12.1.10.3, 12.1.11.3, 13.2.8.3, A.9.5.5.3, A.10.2.7.3, A.10.3.6.3, A.11.2.5.3, A.11.3.6.3, A.12.1.10.3, A.12.1.11.3, A.13.2.8.3
In-rack sprinklers, 25.4.1, 25.4.3, A.25.2.1.2
Isolated, 11.3.6.1.5, 14.2.11.2(1), A.14.2.11.2
Motion picture/television soundstages and production facilities, 26.19.2.3 to 26.19.2.5, A.26.19.2.4, A.26.19.2.5
Noncontinuous obstruction, 9.5.5.2.1, 10.2.7.2.1.1, 10.3.6.2.1.1, 10.3.6.3.1, 11.2.5.2.1.1, 11.2.5.3.1, 11.3.6.2.1.1, 11.3.6.3.1, 12.1.10.3.1, 12.1.11.2.1.1, 12.1.11.3.1, 13.2.8.2.1.1, 13.2.8.3.1, 14.2.11.2(1), A.11.2.5.2.1.3, A.11.3.6.2.1.3, A.13.2.8.2.1.3
Definition, 3.3.133.2
Pattern development, 9.5.5.2, 10.2.7.2, 10.3.6.2, 11.2.5.2, 11.3.6.2, 12.1.10.2, 12.1.11.2, 13.2.8.2, A.9.5.5.2, A.10.2.7.2.1.3 to A.10.2.7.2.2.1, A.10.3.6.2.1.3 to A.10.3.6.2.2.1, A.11.2.5.2.1.3, A.11.2.5.2.1.9, A.11.3.6.2.1.3 to A.11.3.6.2.2.1, A.12.1.10.2.1.3 to A.12.1.10.2.3, A.12.1.11.2.1.3 to A.12.1.11.2.2, A.13.2.8.2.1.3
Performance objectives, 9.5.5.1, 10.2.7.1, 10.3.6.1, 11.2.5.1, 11.3.6.1, 12.1.10.1, 12.1.11.1, 13.2.8.1, A.9.5.5.1, A.10.2.7.1.2 to A.10.2.7.1.10, A.10.3.6.1.6, A.11.2.5.1.2, A.11.3.6.1.6, A.12.1.11.1.5, A.12.1.11.1.6
Residential sprinklers, 12.1.9 to 12.1.11, A.12.1.10.2.1.3 to A.12.1.11.3.2
Suspended or floor-mounted vertical, 10.2.7.2.2, 10.3.6.2.2, 11.2.5.2.2, 11.3.6.2.2, 12.1.10.2.2, 12.1.11.2.2, A.10.3.6.2.2.1, A.11.3.6.2.2.1, A.12.1.11.2.2
Occupancy classifications, 4.3, 16.3.9.6, 19.3.1.2, A.4.3, see also Extra hazard occupancies; Light hazard occupancies; Ordinary hazard occupancies; Special occupancy hazards
Changes, 9.4.2.6
Fire control design approach, occupancy hazard, 19.2.4.1(1), 19.3
Marine, 30.1.3, A.30.1.3, A.30.1.4
Multiple hazard classifications, systems with, 20.10.4, A.20.10.4(3)
Water demand requirements, pipe schedule method, 19.3.2
Old-style/conventional sprinklers, 9.3.10(1), 9.3.12, 15.4, 26.22.2.1.2(B), A.9.3.12
Definition, 3.3.205.4.10
On-floor storage
Cartoned, nonexpanded plastics, A.19.2.2, A.20.10
Idle pallets, Table 20.14.3.2
Tires, Table 20.12.2.6, Table 21.6.1(a), Fig. A.3.3.185(f)
On-side tire storage, Table 4.3.1.7.1, Table 21.6.1(a), Table 22.6, 25.2.3.6.2, 25.2.3.6.3, 25.9.6
Definition, 3.3.136
On-tread tire storage, 4.3.1.6.2, Table 4.3.1.7.1, Table 21.6.1(a), Table 22.6, 25.2.3.6.2, 25.2.3.6.3, 25.9.6
Definition, 3.3.137
Open-grid ceilings, 9.2.15, 9.3.10, A.9.3.10
Openings, see also Small openings; Vertical shafts
Pipe through, clearance for, 18.4, A.18.4
Protection of, 19.3.3.3.5, 20.8.2.1
Floors openings, 9.3.5, 27.5.1.5, A.9.3.5
Large openings, 9.3.5.4
Open joist construction, see Wood joist construction
Open racks, 21.8.1.2(4), 22.1.6, 23.1.4, 25.1.2, 25.2.1.2, A.22.1.6, A.25.2.1.2, see also Rack storage
Definition, 3.3.140
Tire storage, Table 22.6, Fig. A.3.3.185(a), Fig. A.3.3.185(c)
Open sprinklers, 8.7.8.6, 15.1, 19.4.3.3, 19.5
Definition, 3.3.205.4.11
Open-top containers, 20.3.3, 23.1.4.2, 23.6.1.1(2), C.12
Definition, 3.3.142, A.3.3.142
High bay records storage, 23.12.1, A.23.12.1
Open trusses, 14.2.11.3.2
Operational tests, system, 28.2.3, 30.8.3, A.28.2.3.2 to A.28.2.3.4.2

EDUFIRE.IR

Ordinary hazard occupancies, 16.3.9.6, 16.3.10.1, 19.3.1.2.4(2), 19.3.2.7, 27.5.2.2.2
Adjacent hazards, A.20.10.4(3)
Airport terminals, 26.25.1.1, 26.25.1.2, A.26.25.1.2
Cloud ceilings, 9.2.7.2.3
Compressed gas and cryogenic fluids, storage, use, and handling, 26.11.1.1
Early suppression fast-response (ESFR) sprinklers, 14.2.7
Fire department connections, 16.15.2.1
Group 1 (OH1), 4.3.3, 23.1.1(3), 26.8.1(2), 26.25.1.1, A.4.3.3, Table A.30.1.3
Definition, 3.3.134.4
Group 2 (OH2), 4.3.4, 20.14.2(4), 23.1.1(3), 26.4.1.2, 26.8.1(1), 26.9.2.1, 26.11.1.1, 26.25.1.2, A.4.3.4, A.19.2.2, A.20.10, A.26.5.1, A.26.25.1.2, Table A.30.1.3
Definition, 3.3.134.5
Laboratories using chemicals, 26.8.1(1)
Marine, Table A.30.1.3
Open-grid ceilings, 9.3.10(1)
Openings, protection of, 19.3.3.3.5(3)
Pipe schedule, 27.5.3, A.27.5.3.9
Roof, exterior, 8.7.8.6
Solvent extraction plants, A.26.5.1
Spray application areas, 26.4.1.2
Sprinkler types used in, 13.2.4, 16.8.6.2
Control mode specific application (CMSA) sprinklers, 22.1.1(2), 22.1.2
Early suppression fast-response (ESFR) sprinklers, 23.1.1
Extended coverage (EC) sprinklers, 11.2.4.1.1.4, 11.3.2(2), A.11.2.4.1.1.4(A), A.11.2.4.1.1.4(B)
Exterior projections, 9.2.3.3(2)
Pendent/upright sprinklers, Table 10.2.4.2.1(b), 10.2.6.1.1.3, 10.2.7.2.1.4, 11.2.4.1.1.4, A.10.2.7.2.1.4, A.11.2.4.1.1.4(A), A.11.2.4.1.1.4(B)
Quick-response (QR) sprinklers, 19.3.3.2.3.1(2)
Sidewall sprinklers, 10.3.2(2), 11.3.2(2)
Special sprinklers, 15.2.2(3)
System protection area limitations, 4.5.1(2), 4.5.3
Water demand requirements, 19.3.3.1.4(1), 19.3.3.1.5.2, 19.3.3.3.5(3)
Ordinary temperature-rated sprinklers, 9.4.2.3, 9.4.2.5, 14.2.6, C.14, C.23
Cartoned records storage, 21.11.6.3, 21.11.6.4.5, A.21.11.6.3.5
Compact storage, 21.12.3
Control mode density area (CMDA) sprinklers, 21.1.8, 21.1.9, Figs. 21.4.1.2(a) to 21.4.1.2(e), 21.8.1.2(1), 25.2.3.1.8, 25.2.3.1.9
Control mode specific application (CMSA) sprinklers, 13.2.3.3
In-rack, 25.3.1, 25.3.2, 25.8.2.3, A.25.2.3.3.1
Oxidizer solids and liquids storage, 26.36.1.3.3(A), 26.36.1.3.4.2(A)(3), 26.36.1.3.4.4(H)
Protection criteria for, 21.2.2.1
Organic peroxide formulations, storage of, 26.36.1.2
Orifice sizes, 27.2.4.9, A.5.2, A.7.2.2.1, A.9.3.12, A.27.2.4.9
Ornamental finishes, 7.2.5.3
Ornamental sprinklers, 7.2.5.3
Definition, 3.3.205.4.12
Outlet fittings, 7.5.5.2
Outside hose, see Hose
Outside sprinklers, 8.7, 8.10.7, 8.10.8, 19.4.2, A.8.7.4.2.1 to A.8.7.9, A.19.4.2.1, see also Exposure protection systems
Ovens, 9.3.8, 26.16, A.9.3.8, A.26.16.2.1, A.26.16.2.6
Overhangs, 9.2.1.19
Overhead doors
Protection of area below, 9.5.5.3.3.1, 10.3.2(3), 11.3.2(8)
Sprinklers obstructed by, 14.2.11.3.5
Owner's certificate, 4.2, 27.1.4, A.4.2
Oxidizer solids and liquids, indoor storage of, 26.36.1.3
Oxygen-fuel gas system for welding, cutting, and allied processes, 26.9

P

Packaging (definition), 3.3.146, see also Containers; Encapsulation
Paddle-type waterflow alarms, 16.11.3.4, A.16.11.3.4
Painting
Cover plates, of, 16.2.3.3, 29.3.7
Sprinklers, of, 7.2.5.2, 16.2.3, 16.2.4.3, 26.4.2.2, A.7.2.5.2
Palletized storage, Table A.20.3
Alternative sprinkler system designs, 24.2, A.24.2
Class I to IV commodities, Table 4.3.1.7.1, Table 20.6.4.2, Table 20.6.4.3, 21.2, 22.2, 23.3, 24.2, A.24.2
Control mode density/area (CMDA) sprinklers, 21.2, 21.3, A.21.2, A.21.3.2 to A.21.3.3.2
Control mode specific application (CMSA) sprinklers, 22.2, 22.3
Definition, 3.3.148
Discharge criteria, Table 4.3.1.7.1
Early suppression fast-response (ESFR) sprinklers, 23.3, 23.4, A.23.4.1
High-expansion foam systems, 20.9.2.1, 20.9.2.3
Oxidizer solids and liquids storage, Table 26.36.1.3.1, 26.36.1.3.2
Plastic and rubber commodities, Table 4.3.1.7.1, 20.6.4.3, 21.3, 22.3, 23.4, 24.2, A.21.3.2 to A.21.3.3.2, A.23.4.1, A.24.2
Tires, Table 21.6.1(a), Table 21.6.1(b), Table 22.6, 25.2.3.6.2, Fig. A.3.3.185(b)
Definition, 3.3.149
Pallets
Flow-through pallet rack, Fig. A.3.3.171(g)
Idle, 20.14, A.20.14
High-expansion foam systems, 20.9.2.1
Plastic, Table 20.12.2.6, 20.14.2, Table A.20.3, A.20.14
Rack storage, 20.14.2.3, 20.14.3
Wood, Table 20.12.2.6, 20.14.1, A.20.14, A.20.14.1.1, A.21.1.2, C.7
Plastic, see Plastics
Slave, 20.3.2.5
Definition, 3.3.147.4
Types, and commodity classification, 20.3.2, A.20.3.2.2.1, A.20.3.2.2.2.1
Unit load, see Unit load Wood, see Wood pallets
Pantries, 9.2.4.2
Paper, see also Compact storage; Roll paper storage; Tissue paper
Carton records storage
Definition, 3.3.21, A.3.3.21
Sprinkler protection, 20.4.13, C.25
Definition, 3.3.150
High-bay records storage, protection of, 23.12, A.23.12.1
Products, Table A.20.4.2, Table A.20.4.3, Table A.20.4.4, Table A.20.4.5.1, Table A.20.4(b)
Parking garages, 16.9.11.4
Partial systems, 19.2.6.4(3), 20.12.2.5(3), 30.1.4, A.30.1.4
Pendent sprinklers, 10.2, 12.1.1, A.10.2.4.2.1 to A.10.2.9.2(4), A.12.1.1
Alternative sprinkler system designs, Table 24.2.1, Table 24.3.1, Table 24.3.2(b)
Cabinets, protection for, 12.1.11.1.5.1
Ceiling pockets, 10.2.9, 11.2.8, A.10.2.9.1, A.10.2.9.2(4), A.11.2.8.2(4)
Clearance to storage, 10.2.8, 11.2.6, 11.2.7, A.11.2.6, A.11.2.7.1
Cloud ceilings, 9.2.7.2.1
Combined dry pipe-preaction systems, 8.4.2.4(3)
Compact storage, 21.12.3
Concealed spaces, in, 10.2.6.1.4, A.10.2.6.1.4.3 to A.10.2.6.1.4.5
Control mode density area (CMDA) sprinklers, 21.1.3, 21.1.4, 21.12.3
Control mode specific application (CMSA) sprinklers, 13.2.1.1, Tables 22.2 to 22.5
Definition, 3.3.205.3.3
Deflector position, 10.2.6, 10.3.5.1.4.1, 11.2.4, 12.1.8.1, 14.2.10.1.1 to

EDUFIRE.IR

14.2.10.1.3, A.10.2.6.1.2(5) to A.10.2.6.1.4.5, A.10.3.5.1.4, A.11.2.4.1.1.4(A) to A.11.2.4.1.3
Dry pipe systems, 8.2.2(3), 8.2.2(5)
Dry sprinklers, 16.3.11.4, A.15.3.1, Fig. A.15.3.1(b), Fig. A.15.3.1(d)
Early suppression fast-response (ESFR) sprinklers, Table 23.3.1, Table 23.4.2, Table 23.5.1, Table 23.6.1, Table 23.8, Table 23.9
Elevator hoistways, 9.3.6.5, A.9.3.6.5
Exposure protection systems, 8.7.9.3
Extended coverage (EC), 11.2, Table 24.2.1, Table 24.3.1, A.11.2.2.1 to A.11.2.8.2(4)
Hanger assembly for, 17.4.3.4.4, 17.4.3.5.2, A.17.4.3.4.4, Fig. A.17.4.3.5.2
Hydrostatic tests, 28.2.1.8, A.28.2.1.8
Idle pallets
Plastic, Table 20.14.2.2.3
Wood, Table 20.14.1.2(c)
In-rack, 25.3.1, 25.8.2.3, 25.8.3.3
Marine terminals, piers, and wharves, 26.22.2.1.2(B)
Obstructions to discharge, 10.2.6.1.2, 10.2.7, 11.2.5, 12.1.10, A.10.2.6.1.2(5), A.10.2.7.1.2 to A.10.2.7.3.2, A.11.2.5.1.2 to A.11.2.5.3.2, A.12.1.10.2.1.9 to A.12.1.10.2.3
Oxidizer solids and liquids storage, 26.36.1.3.4.4(F) Preaction systems, 8.3.2.5(3), 8.3.2.5(5)
Protection areas, 10.2.4, 11.2.2, A.10.2.4.2.1, A.11.2.2.1, A.11.2.2.2.1
Residential sprinklers, 12.1.8.1, 12.1.8.7, 12.1.9, 12.1.10, 12.1.11.1.5.1, A.12.1.10.2.1.9 to A.12.1.10.2.3
Return bends, 16.3.11.1, 16.3.11.4, 30.4.8
Roll paper storage, Table 22.2
Roof protection use, 8.7.8.6
Spacing, 10.2.5, 11.2.3, A.10.2.5.2.2, A.10.2.5.2.3
Penstocks, water supply connections from, 5.2.6
Peroxide, organic, 26.36.1.2
Piers, 26.22, A.26.22.1.1 to A.26.22.2.1.2(B)(5)
Piles, see also High-piled storage; Low-piled storage; Solid-piled storage
Miscellaneous storage, 4.3.1.4.2, 4.3.1.4.3
Oxidizer solids, Table 26.36.1.3.4.1(B), Table 26.36.1.3.4.3
Pile stability, see Stable piles; Unstable piles
Pills, see Powders/pills
Pilot line detectors, 8.10
Definition, 3.3.205.4.13
Pilot sprinklers, 16.11.3.3.1
Pipe friction loss, 27.2.2.1.1, 27.2.4.8, A.27.2.4.8.2
Pipes and piping, see also Fittings; Risers; Valves
Abandoned in place, 29.2.4
Aboveground, 7.3, A.7.3.2 to A.7.3.4.1
Air venting, 8.1.5, 16.7, A.16.7
To alarms, 16.11.1.3, 16.11.1.4
Antifreeze systems, 8.6.3, A.8.6.3.2 to A.8.6.3.6
Bending, 16.3.8, 16.3.9.7, 16.3.10.2
Clearance, 18.4, A.18.4
Couplings, see Couplings
Drainage, 16.10, A.16.10.4.6, A.16.10.5.2.1
Drop-out ceilings, piping above, 9.3.11.4, A.9.3.11.4
End treatment, 7.5.6
Equivalent lengths, valves, and fittings, 27.2.3
Existing system modification, 29.7.1, see also Pipe schedule systems
Flushing of, see Flushing
Foundation walls, piping through/under, 5.1.6.2, A.5.1.6.2
Grounding, use for, 6.5, 16.16.1, A.6.5.1
Hazardous areas, protection of piping in, 16.4.3, A.16.4.3
Heat-sensitive materials, 30.4.10, A.30.4.10.1(4)
Hose connections for, 16.15.1.3
Hydraulic calculations, 27.2.4.6.1, 27.2.4.8, A.27.2.4.6.1, A.27.2.4.8.2
Hydrostatic tests, 28.1.7, 28.2.1.1, 28.2.1.5, 30.8.1, A.28.2.1.5
Identification, 7.3.4, A.7.3.4.1, A.16.4.2
Installation, 6.8, Chap. 16
Joining, see Joints
Marine systems, 30.2.2, 30.2.4, 30.2.5, 30.3.3, 30.4.10, 30.7.4.5, A.30.2.2, A.30.2.4.1, A.30.2.5.1 to A.30.2.5.4, A.30.4.10.1(4)
Materials and dimensions, 7.3.1 to 7.3.3, 16.3, A.7.3.3, A.16.3.2 to A.16.3.12.2
Outside sprinklers, 8.7.5
Pilot line detectors, supplying, 8.10.1, 8.10.10
Plastic, see Plastics
Private fire service mains, see Private fire service mains
Protection, 16.4, A.16.4.1.1 to A.16.4.3
Corrosion, see Corrosion-resistant piping
Earthquake damage, see Seismic damage, pipe protection from
Freezing, see Freezing, protection from
Hazardous areas, protection of piping in, 16.4.3, A.16.4.3
Mechanical damage, 6.4.2.2, 8.16.4.3.1, 8.16.5, 16.2.6, 16.5
Underground pipe, 6.4.2, A.6.4.2
Refrigerated spaces, 8.8.2.1, 8.8.2.3, 8.8.2.7, A.8.8.2.1.1, A.8.8.2.7.1
Size, see also Pipe schedule systems
Fire department connections, 16.12.4, A.16.12.4
In-rack sprinklers, 25.12.1.2, 27.2.5.1
Light hazard occupancies, 27.5.2.2
Ordinary hazard occupancies, 27.5.3.4 to 27.5.3.10, A.27.5.3.9
Solvent cement, use of, 9.4.1.4
Sprinklers above/below ceilings, see Ceilings Sprinklers below ceilings, see Ceilings
Sprinklers obstructed by, 9.5.5.2.2, 10.3.6.2.1.3, 11.2.5.2.1.3, 11.3.6.2.1.3, 12.1.10.2.1.3, 12.1.10.2.1.7, 12.1.11.2.1.3, 12.1.11.2.1.6, 13.2.8.2.1.3, 13.2.8.2.2, 14.2.11.3.1(1), 14.2.11.3.3, A.10.3.6.2.1.3, A.11.2.5.2.1.3, A.11.3.6.2.1.3, A.12.1.10.2.1.3, A.12.1.11.2.1.3, A.13.2.8.2.1.3, A.14.2.11.3.3
Steel, see Steel
Sway bracing, 18.5, A.18.5
Test connections, 16.14, A.16.14.2 to A.16.14.5.1
Threaded, see Threaded pipe and fittings
Underground, see Underground pipe
Unsupported lengths, 17.4.3.4, A.17.4.3.4
Water-cooling towers, 26.21.2.9.1
Welded, 7.5.2, 16.3.2, A.7.5.2.2, A.16.3.2
Pipe schedule systems, 27.5, A.27.5.1 to A.27.5.4
Definition, 3.3.206.8
Existing system modifications, 29.1.4, 29.4, 29.6.2
Extra hazard occupancies, Table 10.2.4.2.1(c), 27.5.4, A.27.5.4
Light hazard occupancies, Table 10.2.4.2.1(a), 27.5.2, A.27.5.2.6
Marine systems, 30.5.1.2
Ordinary hazard occupancies, 27.5.3, A.27.5.3.9
Risers, size of, 27.5.1.4, A.27.5.1.4
Underground supply pipe, 5.1.4
Water demand requirements, 19.3.1.1, 19.3.2
Pipe stands, 17.5, 18.8, A.17.5
Pipe support, see also Hangers
Marine systems, 30.2.5, A.30.2.5.1 to A.30.2.5.4
Risers supported by hangers, 17.4.5, A.17.4.5.3, A.17.4.5.4.2
Sway bracing, 18.5, A.18.5
Pits, valves in, 16.9.7, 16.9.10, A.16.9.7, A.16.9.10.2
Places of worship, 26.29, A.26.29.1.1 to A.26.29.2.3
Plans and calculations, 4.6.1.1, Chap. 27, A.4.6.1.1
Marine systems, 30.6, A.30.6.4
Predicting expected performance from calculations, B.2.1.4
Plastics
Classification of, 20.4.3 to 20.4.8, 20.4.11, 20.10.2, Table A.20.3, Table A.20.4(b), Table A.20.4.1, A.20.4.3, A.20.4.4,

EDUFIRE.IR

Table A.20.4.5.1, A.20.4.5 to A.20.4.8, A.20.10.2
High bay records storage, 23.12.1, A.23.12.1
Pallets, 20.3.2.2 to 20.3.2.4, A.20.3.2.2.1, A.20.3.2.2.2.1
Definition, 3.3.147.2
Idle, 20.14.2, A.20.14, A.20.14.1.1
Reinforced, 20.3.2.2.2, A.20.3.2.2.1
Definition, 3.3.147.3, A.3.3.147.3
Unreinforced, 20.3.2.2.1, A.20.3.2.2.1
Pipe, hangers, and fittings, CPVC, Table 7.3.1.1, 7.3.2, Table 7.4.1, 7.4.3, 16.3.1.3, 16.3.9, 16.8.2, 16.8.5.4, 18.6.1(4), A.7.3.2, A.16.3.9.4, A.16.8.2.1, A.16.8.2.2, A.17.4.3.4
Retail stores, display/storage in, 20.4.12, 21.9, 23.11
Plastics storage, A.19.2.2, Table A.20.4(b), A.20.10
Alternative sprinkler system design, 24.2, 24.3, A.24.2, A.24.3
Ceiling sprinklers, 25.2.1.3 to 25.2.1.5, A.25.2.1.3
Clearance to ceiling, 20.6.4.4
Control mode density area (CMDA) sprinklers, 21.3, 21.5, A.21.3.2 to A.21.3.3.2, C.21
Control mode specific application (CMSA) sprinklers, 22.1.8, 22.3, 22.5
Discharge criteria, Table 4.3.1.7.1
Early suppression fast-response (ESFR) sprinklers, 23.4, 23.6, A.23.4.1
High-expansion foam systems, 20.9.2.1
Motor vehicle components, 20.4.11, 20.5.6, 23.10, A.20.4.11
Palletized, solid piled, bin box, or shelf storage, Table 20.6.4.4, 21.3, 22.3, Table 22.3, 23.4, 24.2, A.21.3.2 to A.21.3.3.2, A.23.4.1, A.24.2
Rack storage, 4.3.1.5.2, Table 20.15.1, 21.8.1.2(2), 22.5, 23.6, 23.7, 23.13.2(2), Chap. 25, A.21.1.2, A.23.7
Alternative sprinkler system design, 24.3, A.24.3
Over 25 ft. in height, Table 20.6.4.4, 25.2.3.5, 25.9.4, A.25.2.3.5, A.25.9.4.2.2, A.25.9.4.3.1
Retail display/storage, 21.9
Solid shelf racks, 25.8.3.2.1
Up to and including 25 ft in height, Table 20.6.4.4, 21.5, 25.2.3.4, 25.5.2.3.2, 25.9.3, A.25.9.3.2, A.25.9.3.3, C.13, C.19 to C.22
Retail stores, 20.4.12, 21.9, 23.11
Up to and including 25 ft in height, 25.9.5.2
Platforms, 9.2.2, 9.3.18, 27.5.1.5
Plenums
Sprinklers in, 8.9.2.1, 8.9.2.2, 8.9.5 to 8.9.7, 26.23.1.2
Unsprinklered return air space, 9.2.1.2.1, 19.3.3.1.5.2
Plug straps, underground pipe, 6.6.2.3, 6.6.2.4
Portable racks, 25.2.3.2.3, .25.2.3.2.3.1
Automotive components on portable racks, see Automotive components on portable racks
Ceiling sprinkler water demand, 21.4.1.2, 21.4.1.3.1, 21.4.1.3.2, A.21.4.1.2.1, C.14, C.15
Definition, 3.3.157
Tire storage, Table 4.3.1.7.1, Table 21.6.1(a), Table 21.6.1(b), Table 22.6, A.3.3.185
Post-indicator valves, 16.9.3.2.1, 16.9.6.1, 16.9.7, 16.9.9, 26.27.2.1.1, A.16.9.7, A.16.9.9
Post-installed anchors, 17.2.2, 18.5.12.7.1, A.17.2.2, A.17.5.4.3, A.18.5.12
Definition, 3.3.158, A.3.3.158
Powder-driven studs/fasteners, 17.2.2.9, 17.2.3.1, 18.5.11.11, 18.7.7, A.17.2.2.9.3, A.17.2.3.1
Powders/pills, Table A.20.4.1, Table A.20.4.2, Table A.20.4.4, Table A.20.4.5.1, Table A.20.4(b)
Preaction sprinkler systems, 8.3, 20.13.2.2, 20.13.3, A.8.3.1 to A.8.3.3, A.20.13.2.2, see also Combined dry pipe-preaction sprinkler systems
Advanced light water reactor electric generating plants, 26.27.1.6.2
Control mode specific application (CMSA) sprinklers, 13.2.2, 22.1.5.2, 25.2.4.1.2
Cultural resource properties, 26.29.1.2, 26.29.1.3.4, 26.29.1.3.5, 26.29.2.2, 26.29.2.3, A.26.29.1.2, A.26.29.2.2, A.26.29.2.3
Definition, 3.3.206.9, A.3.3.206.9
Double interlock systems, 8.3.2.1(3), 8.3.2.3, 8.8.2.8.1.2, 16.14.3.3 to 16.14.3.7, 19.3.3.2.5, 26.29.1.3.5, A.8.3.2.3.1.4 to A.8.3.2.5(2)
Air test, 28.2.1.4, 28.2.2, 29.7.2
Existing system modification, 29.7.2
Drainage, 16.10.3, 16.10.5, 16.10.5.3, A.16.10.5.2.1
Early suppression fast-response (ESFR) sprinklers used in, 14.2.2
Fire department connections, 16.12.5.2(3)
Light hazard occupancies, 9.4.4.4
Marine, supervision of, 30.3.3
Operational tests, 28.2.3.3
Piping, protection of, 16.4.1.1, A.16.4.1.1
Refrigerated spaces, 8.8.2.8, A.8.8.2.8.1.1
Residential sprinklers used in, 12.1.3
Spray application areas, 26.4.1.1, A.26.4.1.1
Telecommunication facilities, 26.31.2.1
Test connections, 16.14.3
Water-cooling towers, 26.21.1.1.1(3), 26.21.1.7.2, 26.21.2.1.3, A.26.21.1.1.1, A.26.21.1.7.2.1, A.26.21.1.7.2.2
Waterflow detecting devices, 16.11.3.3
Preaction valves, 8.3.2.3.1, 8.8.2.6.2, 16.11.5.1, 16.11.5.2, 16.12.5.2(3), 28.2.3.3.1, A.8.3.2.3.1.4
Premixed antifreeze solution, 8.6.2, A.8.6.2
Definition, 3.3.160
Pressure, see also Air pressure; Residual pressure; Static pressure; System working pressure
Fittings, pressure limits for, 16.8.3, A.16.8.3
Hydraulic calculation procedure, 27.2.4.10, A.27.2.4.10
Rated pressure of components, 7.1.2
Valves, pressure requirements, 16.9.1.2
Pressure gauges, 16.1.1, 16.9.8.2, 16.13.3, 28.2.1.5, A.16.1.1, A.28.2.1.5
Deluge systems, 8.3.1.3
Drains, see Drains Dry pipe systems, 8.2.1
Outside sprinklers, 8.7.7
Preaction systems, 8.3.1.3
Wet pipe systems, 8.1.1, A.8.1.1.2
Pressure-reducing valves, 16.9.8, 16.10.4.5, 16.13.1, 28.2.4, A.16.9.8.3
Pressure regulating devices, 16.15.1.4, A.16.15.1.4, see also Pressure- reducing valves
Definition, 3.3.161
Pressure relief valves, see Relief valves
Pressure tanks, 5.2.1(4), 5.2.4, A.5.2.4.3
Marine systems, 30.4.12.2, 30.6.1, 30.7.2, 30.7.4.1, 30.7.4.5, 30.8.3.1, A.30.7.2.7
Privacy curtains, see Curtains
Private fire hydrants, 19.2.6.2
Definition, 3.3.101.3
Private fire service mains, 16.4.3, 16.9.7, A.16.4.3, A.16.9.7
Above grade, 6.1.4, A.6.1.4
Approval of, 28.1
Definition, 3.3.163, A.3.3.163
Underground pipe, 6.1.1, 6.1.2, A.6.1.1, A.6.1.2
Backfilling, 6.9.6
Under buildings, 6.4.3, A.6.4.3.1 to A.6.4.3.2.3
Fittings, 6.2
Operational tests, 6.10.2.4.4
Protection of, 6.4, A.6.4.1.3 to A.6.4.3.2.3
Restraint, 6.6, A.6.6
Production facilities, motion picture and television, 26.19, A.26.19.2.4, A.26.19.2.5
Proprietary station supervisory service, see Central, proprietary, or remote station supervisory service
Propylene glycol, 8.6.2.2
Proscenium curtains/openings, 9.3.13.2

EDUFIRE.IR

Protection for system components
Corrosion, see Corrosion-resistant piping; Corrosion-resistant sprinklers; Corrosion-retarding material
Dry pipe valves, 8.2.5, A.8.2.5
Earthquake damage, pipe protection from, see Seismic damage, pipe protection from
Exposure, see Exposure protection systems Freezing, see Freezing, protection from
Pilot line detectors, 8.10.2
Pipe, see Pipes and piping
Preaction and deluge water control valves, 8.3.1.8
Protection provided by sprinkler system, see System protection area
Protective coverings, sprinkler, 16.2.4, 16.2.6, 26.4.2.2, A.16.2.4.2
Prying factors, 18.5.12.7.2, E.7
Definition, 3.3.164, A.3.3.164
Public hydrants (definition), 3.3.101.4
Pumper outlets (definition), 3.3.166
Pumps, 16.9.7, A.16.9.7, see also Fire pumps
Marine systems, 30.4.12.2, 30.6.1, 30.7.2.2, 30.7.3, 30.7.4.1, 30.7.4.5, 30.8.3.1, 30.8.3.2, A.30.7.3.3 to A.30.7.3.13
Water supply, 5.2.3, 20.12.2.2, A.5.2.3, A.20.12.2.2
Purlins, 17.4.4.3 to 17.4.4.5, 18.7.5
Purpose of standard, 1.2, A.1.2
Pyramid tire storage, Table 21.6.1(a)
Definition, 3.3.167

Q

QR, see Quick-response (QR) sprinklers
QREC, see Quick-response extended coverage (QREC) sprinklers
QRES, see Quick-response early suppression (QRES) sprinklers
Quick-opening devices, 8.2.1(5), 8.2.3.3, 8.2.3.4, 8.2.4, 8.3.2.3.2, 8.4.3.8, 28.2.3.2.2
Quick-response early suppression (QRES) sprinklers (definition), 3.3.205.4.14, A.3.3.205.4.14
Quick-response extended coverage (QREC) sprinklers (definition), 3.3.205.4.15, see also Extended coverage (EC) sprinklers
Quick-response (QR) sprinklers, 9.4.3.2, 9.4.3.5, 10.2.6.1.4.1, 14.2.11.3.5, 21.1.7, 22.1.1, C.26
Alternative sprinkler system designs, 24.1.2.1.1, 24.1.2.2.1
Animal housing facilities, 26.20.2.1
Apartment building dwelling units, D.1.1.6.2, D.2.19.2.2
Cartoned records storage, 21.11.6.3, 21.11.6.4.5, A.21.11.6.3.5
Ceiling pockets, 10.2.9.2(6), 11.2.8.2(6)
Cleanrooms, 26.23.2.2, A.26.23.2.2
Cloud ceilings, 9.2.7.2.1
Compact storage, 21.12.3
Control mode density area (CMDA), 25.2.3.1.7
Control mode specific application (CMSA), 13.2.4.1
Conversion to, 29.3.5
Definition, 3.3.205.4.16, A.3.3.205.4.16
Extra-hazard occupancies, 19.3.3.2.2.2
Guest rooms or suites, D.1.1.4.2, D.2.17.2.2
In-rack, 25.3.1, 25.3.2, 25.8.1.5, 25.9.5.1 to 25.9.5.3
Laboratories using chemicals, 26.8.2
Light hazard occupancies, 9.4.3.1, 9.4.3.6, A.9.4.3.1
Oxidizer solids and liquids storage, 26.36.1.3.3(A), 26.36.1.3.4.2(A)(3), 26.36.1.3.4.4(H)
Water demand requirements, 19.3.3.2.3

R

Racks, see also Double-row racks; Movable racks; Multiple-row racks; Portable racks; Single-row racks
Definition, 3.3.171, A.3.3.171
Rack shelf area (definition), 3.3.172
Rack storage, 20.5.3, Chap. 25, A.20.5.3, A.20.13.2.2, Annex C, see also Longitudinal flue spaces; Transverse flue spaces
Alternative sprinkler system designs, 24.1.5, 24.3, 25.8, A.24.3, A.25.8.2.11.1
Automotive components on portable racks, see Automotive components on portable racks
Baled cotton storage, 21.10.1
Carton records storage, 21.11, A.21.11.6.3.5
Class I to IV commodities, 21.8.1.2(2), 23.5, 23.13.2(2), 24.3, Chap. 25, A.24.3
Columns, protection for, 20.15, A.20.15.1
Control mode density/area (CMDA) sprinklers, see Control mode density/area (CMDA) sprinklers
Control mode specific application (CMSA) sprinklers, see Control mode specific application (CMSA) sprinklers
Early suppression fast-response (ESFR) sprinklers, see Early suppression fast-response (ESFR) sprinklers
Existing system modifications, 29.1.5, 29.6.2(3), 29.6.7
Extended coverage (EC) sprinklers, 25.8.3.3
High-expansion foam systems, 20.9.2.2 to 20.9.2.4, 20.9.2.6
In-rack sprinklers, use of, see In-rack sprinklers
Oxidizer solids and liquids storage, 26.36.1.3
Pallets, idle, 20.14.2.3, 20.14.3
Plastics commodities, see Plastics storage Protection criteria, general, 25.1, A.25.1.3.3, C.9
Refrigerated spaces, 8.8.2.8.3, 8.8.2.8.4
Sprinkler piping installed in, 17.4.1.2, A.18.1, A.18.2.4
Steel columns, fire protection of, 20.15, A.20.15.1, C.10
Storage over 25 ft in height, Tables 20.6.4.2 to 20.6.4.4, 21.4.2, 21.5.4, 25.2.3.3, 25.2.3.5, 25.4.6, 25.4.7, 25.5.2.3.3, 25.9.2, 25.9.4, 25.9.5.3, A.21.4.2.1, A.25.2.3.3.1, A.25.2.3.5, A.25.9.2.1.1 to A.25.9.2.3.1, A.25.9.4.2.2, A.25.9.4.3.1
Storage up to and including 25 ft in height, Tables 20.6.4.2 to 20.6.4.4, 21.4.1, 21.8, 25.2.3.2, 25.2.3.4, 25.2.3.6, 25.4.2.1, 25.5.2.3.1, 25.9.1, 25.9.3, 25.9.5.1, 25.9.5.2, A.21.4.1.1 to A.21.4.1.2.1, A.21.8.1.1, A.25.2.3.2.1 to A.25.2.3.2.4.3, A.25.4.2.1, A.25.4.4, A.25.9.3.2, A.25.9.3.3, C.13 to C.20, C.22
System protection area limitations, 4.5.1(5)
Tires, Table 4.3.1.7.1, 21.6, Table 21.6.1(a), Table 21.6.1(b), Table 22.6, 23.8, 25.2.3.6, A.3.3.185, Fig. A.3.3.185(a) to A.3.3.185(c), A.21.6
Definition, 3.3.185
Rack storage sprinklers, 9.5.5.3.4, 10.2.7.3.3, 11.2.5.3.4, 11.2.5.3.5, 14.2.11.3.4, A.9.5.5.3.4, Annex C, see also In-rack sprinklers
Definition, 3.3.205.4.8
Discharge criteria, C.19
Hose connections, 16.15.1.3(5)
Temperature rating, 9.4.2.7, A.9.4.2.7
Rated capacity (definition), 3.3.173
Raw water sources, 5.2.6, 16.3.11.1
Definition, 3.3.174, A.3.3.174
Recessed sprinklers, 7.2.4.3, 7.2.6.2, 10.2.6.1.1.2, 11.2.4.1.1.2, 12.1.8.1.2(1), 16.2.5.2, 16.2.5.4, 26.15.2.2.1.3, 26.15.2.2.2.3, A.7.2.6.2, A.16.2.5.2, see also Concealed sprinklers
Definition, 3.3.205.3.4
Reconditioned system components and hardware, 16.1.3
Records, see also Carton records storage
High-bay records storage, 23.12, A.23.12.1
Pipe welding, 7.5.2.6
Storage, 9.3.7, A.9.3.7
Reducers, 16.8.5
References, Chap. 2, Annex F

EDUFIRE.IR

Refrigerated spaces, 8.8, 9.4.2.5(10), 16.10.3.3, A.8.8
Releasing devices
Deluge systems, 8.3.1.4 to 8.3.1.6
Preaction systems, 8.3.1.4 to 8.3.1.6
Relief valves, 8.1.2, 8.2.6.5, 16.9.8.3, A.16.9.8.3
Marine systems, 30.3.1, A.30.3.1
Pressure tanks (marine systems), 30.7.2.3
Remote area of application, B.2.1.3
Remote station supervisory service, see Central, proprietary, or remote station supervisory service
Residential board and care occupancies, D.1.1.8, D.2.22
Residential sprinklers, 7.2.2.4, 7.2.3.1, Chap. 12, 19.4.1, 27.2.4.9.4, A.19.4.1.2
Apartment building dwelling units, D.1.1.6.2, D.2.19.2.2
Conversion to, 29.3.5
Definition, 3.3.205.4.17
Existing system modifications, 19.4.1.4, 29.1.6, 29.6.2(1), 29.6.4
Guest rooms or suites, D.1.1.4.2, D.2.17.2.2
Light hazard occupancies, 9.4.3.1(2), 9.4.3.6
Marine systems, 30.4.2, A.30.4.2
Obstructions to discharge, 9.5.5.3.3, 12.1.9 to 12.1.11, A.12.1.10.2.1.3 to A.12.1.11.3.2
Replacement of, 29.3.6
Residual hydrants, 27.1.3(45)
Definition, 3.3.101.5
Residual pressure, 5.2.4.3.2, 16.15.1.4(5), 16.15.1.4(6), 19.3.2.3(4), 19.3.2.6, 27.4.5.4(2), 28.2.3.4.2, 28.2.4.4, 28.5.3(4), A.5.2.2, A.28.2.3.4.2
Definition, 3.3.179
Restraints, fire service mains, 6.6, A.6.6
Retail stores,storage/display in, 20.4.12, 21.9, 23.11
Retarding devices, 16.11.4
Retroactivity of standard, 1.4
Return bends, 16.3.11, 30.4.8
Ridge pole sprinklers, 8.7.8.6.1
Riser nipples, 13.2.8.2.2(3), 18.5.8.2, 18.5.9.6, 27.1.3(21), 27.2.4.8.1(4), Fig. 27.5.2.3(b), A.18.5.9.6
Definition, 3.3.180
Risers, 27.5.2.2.2
Building service chutes, 19.3.3.4.1
Combined sprinkler and standpipe, control valves for, 16.15.2.2(3)
Definition, 3.3.181
Drain, 16.10.4.8
Earthquake damage, protection from, 18.2.3.1(1), 18.2.3.1(6), 18.5.8, A.18.2, A.18.2.3.1(1), A.18.5.8.1
Fire department connections, 16.12.3.1.3
Floors, joints or couplings at, 16.9.11.5, A.16.9.11.5
Hose connections, 16.15.1.3(3), 16.15.2, A.16.15.2.2
Outside refrigerated spaces, 8.8.2.5, 8.8.2.6.1, A.8.8.2.5
Protection of, 8.16.5, 16.4.1.3, 16.5
Quick-opening device connections, 8.2.4.3, 8.2.4.4
Size, 27.5.1.4, A.27.5.1.4
Support of, 17.4.5, A.17.4.5.3, A.17.4.5.4.2
Sway bracing, 18.5.8, A.18.5.8.1
System, 8.8.2.6.1, 9.3.9.1.2
Definition, 3.3.215
Drain connections, 16.10.4.2, Fig. A.16.10.4.6(b)
Fire department connections, 16.15.2, A.16.15.2.2
Protection against freezing, 16.4.1.3
Storage, requirements for, 20.12.2.3
System protection area limitations, 4.5.1, 4.5.4.1, A.4.5.1(3)
Tanks, 16.9.10.2.6, A.16.9.7, A.18.2
Rivers, water supply connections from, 5.2.6
Rods, 17.2.1, 18.6.5, A.17.2.1.3(1) to A.17.2.3.1
Coach screw, 17.2.4.7
Concrete, size for, 17.2.2.10
Eye, 17.2.1.5
Steel, size for, 17.2.3.5
Threaded sections of, 17.2.1.6
Underground, 6.6.2.1.2, 6.6.2.3.3, 6.6.2.4
Roll paper storage, 20.5.5, Table 20.12.2.6, 22.7, 23.8, Table A.20.4(b), A.20.5.5.1, Table A.21.1.2(c)
Banded, Table 22.7.3(a), Table 22.7.3(b)
Definition, 3.3.182.1
Commodity classifications, 20.4.10, A.20.4.10
Definitions, 3.3.182, A.3.3.182.3, A.3.3.182.5
Discharge criteria, Table 4.3.1.7.1
Existing system modifications, 29.1.5, 29.6.2(3), 29.6.7
Height (definition), 3.3.182.3, A.3.3.182.3
Horizontal, 20.5.5.3
Definition, 3.3.182.2
Protection criteria, 20.5.5.1, 21.7, A.20.5.5.1, A.21.7.4
Temperature rating of sprinklers, 9.4.2.7, A.9.4.2.7
Vertical (definition), 3.3.182.4
Wrapped, 20.5.5.4, 20.5.5.5
Definition, 3.3.182.5, A.3.3.182.5
Roof, see also Concealed spaces
Exterior, 8.7.8.6
Height (definition), 3.3.184
Peak, sprinklers at or near, 10.2.6.1.3, 11.2.4.1.3, A.10.2.6.1.3.2, A.10.2.6.1.3.3, A.11.2.4.1.3, A.22.1.5.4, A.23.4.1
Uninsulated, sprinklers under, 9.4.2.5(5)
Vents, 20.6.5, C.6
Room design method, see Design, sprinkler system
Rooming houses, D.1.1.3, D.2.16
Rooms, small, 10.2.5.2.3, A.10.2.5.2.3
Definition, 3.3.196
Rubber, Table A.20.4.5.1, see also Tires, rubber
Classification of, 20.4.5, 20.4.6, Table A.20.4.1, Table A.20.4.3, A.20.4.5
Storage, Table 20.12.2.6
Clearance to ceiling of, 20.6.4.4
Palletized, solid pile, bin box, or shelf storage, Table 20.6.4.4, 21.3, A.21.3.2 to A.21.3.3.2
Rack storage, Table 20.6.4.4, C.13, C.19, C.20
Tires, of, see Tires, rubber

S

Scope of standard, 1.1, A.1.1
Screws, 17.2.4.1 to 17.2.4.4, 17.2.4.6, 17.4.5.2, 18.5.12.2(m), 18.5.12.5
Sectional valves, 16.10.4.3
SEI/ASCE 7, design approach to conform to, Annex E
Seismic damage, pipe protection from, 17.1.5, Chap. 18, 29.5.4, Annex E
Seismic separation assembly, 18.3, A.18.3
Definition, 3.3.187, A.3.3.187
Semiconductor fabrication facilities, 26.23, A.26.23.2.3
Shafts, vertical, see Vertical shafts
Shall (definition), 3.2.4
Shelf storage, see also Back-to-back shelf storage; Slatted shelf racks; Solid shelving
Class I to IV commodities, Table 4.3.1.7.1, Table 20.6.4.2, Table 20.6.4.3, 21.2
Clearance from deflector to storage, 9.5.6.6, 10.3.7.2, 11.2.7.2
Control mode density/area (CMDA) sprinklers, 21.2, A.21.2
Definition, 3.3.188, A.3.3.188
Discharge criteria, Table 4.3.1.7.1
Oxidizer solids and liquids storage, Table 26.36.1.3.4.1(B)
Pallets, idle, 20.14.3
Plastic and rubber commodities, Table 4.3.1.7.1, 20.6.4.3, 21.3, A.21.3.2 to A.21.3.3.2
Rack storage, 20.5.3.1, 21.8.1, A.21.8.1.1, C.20
Special design for, 21.2.4.1
Sprinkler system design approach, shelves above 12 ft, 21.2.4
Shields, sprinkler, 25.3.5, C.3
Shop-welded
Definition, 3.3.189
Piping, 7.5.2.2.1
Should (definition), 3.2.5

EDUFIRE.IR

Show windows, sprinklers under, 9.4.2.5(6)
Shutoff valves, 16.12.6.2, 16.13.2, 16.14.3.4, 26.21.2.5.1, 26.27.2.1.3(3)
Sidewall sprinklers, 10.3, A.10.3.5.1.2.1 to A.10.3.7
Clearance to storage, 10.3.7, A.10.3.7
Columns, protection for, 20.15.1(2), 20.15.2
Combined dry pipe-preaction systems, 8.4.2.4(3), 8.4.2.4(4)
Definition, 3.3.205.3.5
Deflector position, 10.3.5, 11.3.5, 12.1.8.2 to 12.1.8.4, A.10.3.5.1.2.1 to A.10.3.5.1.4, A.11.3.5.1.2.1 to A.11.3.5.1.4
Dry pipe systems, 8.2.2(3) to 8.2.2(5)
Dry sprinklers, A.15.3.1, Fig. A.15.3.1(a), Fig. A.15.3.1(c)
Elevator hoistways, 9.3.6.1, 9.3.6.5, A.9.3.6.1, A.9.3.6.5
Extended coverage (EC), 11.3, A.11.3
Hanger assembly for, 17.4.3.6, A.17.4.3.6
Hydrostatic tests, 28.2.1.8, A.28.2.1.8
Obstructions to discharge, 10.3.6, 11.3.6, 12.1.11, A.10.3.6.1.6 to A.10.3.6.3.2, A.11.3.6.1.6 to A.11.3.6.3.2, A.12.1.11.1.5 to A.12.1.11.3.2
Outside sprinklers, 8.7.8.6
Plastic pallets, protection of, 20.14.2.2.4.1(5)
Preaction systems, 8.3.2.5(3) to 8.3.2.5(5)
Protection areas, 10.3.3, 11.3.3, A.11.3.3.1
Residential, 12.1.1(5), 12.1.7.4, 12.1.8.2 to 12.1.8.4, 12.1.9
Spacing, 10.3.4, 11.3.4
Signs, see also Identification
General information, 28.6, A.28.6
Hydraulic design information, 28.5, A.28.5
Sprinkler system location and information, 17.4.1.3.3.4, Table A.16.17, A.17.4.1.3.3.4
Single-row racks, Table 4.3.1.7.1, 25.1.8, 25.5.1.8, 25.5.2.2.1, C.14, C.15, C.22
Alternative sprinkler system designs, 24.3.1, 24.3.2, 25.8.1.6, 25.8.1.9, 25.8.2.1, Figs. 25.8.2.4(a) to 25.8.2.4(c), Table 25.8.2.6, 25.8.3.3.1, 25.8.3.4
Carton records storage, 21.11.3(1)
Ceiling sprinklers, 23.1.4, 25.2.1.2, 25.2.1.4, 25.2.3.2.1, 25.2.3.3.1, A.25.2.1.2, A.25.2.3.2.1, A.25.2.3.3.1, C.23
Control mode density area (CMDA) sprinklers, 21.4.1.1, 21.4.1.2, 21.5, 21.8.1.2, 25.4.7.1, A.21.4.1.1, A.21.4.1.2.1, C.21, C.22
Control mode specific application (CMSA) sprinklers, 22.1.6, 22.4, 22.5, Table 25.2.4.2.1, Table 25.2.4.3.1, A.22.1.6
Definition, 3.3.191, A.3.3.171(4), A.3.3.191
Early suppression fast-response (ESFR) sprinklers, 23.1.4, 23.5.1, 23.6.1, 23.7.1, 23.13.2
Flue space, 20.5.3.3.2.1
In-rack sprinkler location, 25.4.2.1, 25.4.6.1, 25.8.1.6, 25.8.3.3.1(A), 25.9.2.1, 25.9.4, A.25.9.2.1.1, A.25.9.4.2.2, A.25.9.4.3.1
In-rack sprinkler spacing, 25.4.2.1, Table 25.5.2.2.3, 25.8.1.7.2, 25.8.3.3.1(B), A.25.4.2.1
Oxidizer solids and liquids storage, 26.36.1.3.4.4(D)
Plastics display/storage, retail stores, 21.9.1
Rubber tire storage, Table 21.6.1(a)
Skylights, 9.2.17, 9.3.16, 10.2.9.3, 11.2.8.3
Slatted shelf racks, 21.8.1, 23.13, Fig. A.3.3.171(d), A.21.8.1.1, A.23.13.1, C.20
Definition, 3.3.192
Plastics display/storage, retail stores, 21.9.1
Slave pallets, 20.3.2.5
Definition, 3.3.147.4
Sloped ceiling, see Ceilings
Small hose, see Hose
Small openings, 9.2.1.1.1, 9.2.1.1.2, 9.2.1.2.1, 19.3.3.1.5.2
Definition, 3.3.195, A.3.3.195
Small rooms, 10.2.5.2.3, 27.2.4.9.3, A.10.2.5.2.3
Definition, 3.3.196
Smooth ceilings, see Ceilings
Soffits, 9.2.1.19, 10.3.5.1.3, 11.3.5.1.3, 11.3.5.1.4, 12.1.8.3, 12.1.11.1.5, A.10.3.5.1.3.2, A.10.3.5.1.3.3, A.11.3.5.1.3.1, A.11.3.5.1.3.2, A.11.3.5.1.4, A.12.1.11.1.5
Soldered joints, 7.5.4, A.7.5.4
Solid-piled storage
Alternative sprinkler system designs, 24.2, A.24.2
Class I to IV commodities, Table 4.3.1.7.1, 20.6.4.2, 20.6.4.3, 21.2, 22.2, 23.3, 24.2, A.24.2
Control mode density/area (CMDA) sprinklers, 21.2, 21.3, A.21.2, A.21.3.2 to A.21.3.3.2
Control mode specific application (CMSA) sprinklers, 22.2, 22.3
Definition, 3.3.201
Early suppression fast-response (ESFR) sprinklers, 23.3, 23.4, A.23.4.1
Plastic and rubber commodities, Table 4.3.1.7.1, 20.6.4.3, 21.3, 22.3, 23.4, 24.2, A.21.3.2 to A.21.3.3.2, A.23.4.1, A.24.2
Solid shelf racks, 20.5.3.1.2, Fig. A.3.3.171(c), A.25.2.3.3.1
Alternative sprinkler system designs, 24.1.3, 25.8.1.4.5
Ceiling-level sprinklers, 4.3.1.5.1, 4.3.1.5.2, 22.1.7, 23.1.4.1, 23.6.1.1, 23.6.1.2, 25.6.2, 25.6.3, A.22.1.6, A.25.2.1.2, A.25.2.3.3.1, C.11
Definition, 3.3.198
High bay records storage, 23.12.3
In-rack sprinklers, 4.3.1.5.1, 4.3.1.5.2, 24.1.3, 25.6, 25.8.3.2, Table 25.12.2.1, Table 25.12.3.1, A.22.1.6, A.25.2.1.2, C.11
Low-piled storage, 4.3.1.5.1, 4.3.1.5.2
Plastics display/storage, retail stores, 21.9.1(4), 21.9.2, 21.9.3, 21.9.4(5), 21.9.5(4), 21.9.5(5), 21.9.6
Solid shelving, 23.6.3.1 to 25.6.3.4, 25.6.2, 25.9.1(4), C.11, see also Solid shelf racks
Definition, 3.3.199, A.3.3.199
Solid unit load of nonexpanded plastic, 20.3.4, Table 21.3.1
Definition, 3.3.200
Solvent extraction facilities, 26.5, 26.35.1.3, A.26.5.1, A.26.35.1.3.2 to A.26.35.1.3.4
Soundstages, 26.19, A.26.19.2.4, A.26.19.2.5
Spaces, see Concealed spaces
Spacing, sprinklers, 8.10.5, 8.10.6, 8.10.8, 8.10.9, 9.1.1, 9.5.1, 9.5.3, 27.2.1.5, A.9.1.1
Alternative sprinkler system designs, 24.5.2, 24.5.3
Cloud ceilings, 9.2.7.2.3
Control mode specific application (CMSA) sprinklers, 13.2.6, A.13.2.6.1
Early suppression fast-response (ESFR) sprinklers, 14.2.4.2, Table 14.2.8.2.1, 14.2.8.2.3, 14.2.8.2.4, 14.2.9, A.14.2.8.2.3, A.14.2.9.1(3)
Extended coverage (EC) pendent, upright, and sidewall sprinklers, 11.2.3, 11.3.4
In-rack sprinklers, see In-rack sprinklers
Residential sprinklers, 12.1.7
Standard pendent, upright, and sidewall sprinklers, 10.2.5, 10.3.4, A.10.2.5.2.2, A.10.2.5.2.3
Spare detection devices, stock of, 30.3.2
Spare sprinklers, stock of, 16.2.7, 30.2.3, A.16.2.7.1 to A.16.2.7.7.1
Special occupancy hazards, 19.3.1.2.4(4), A.4.3.8
Special occupancy requirements, Chap. 26
Special situations
Concealed spaces, 9.3.17, A.9.3.17.1.1
Drop-out ceilings, 9.3.11, A.9.3.11.1 to A.9.3.11.5
Ducts, 9.3.9
Electrical equipment, 9.3.20, A.9.3.20.1
Elevator hoistways and machine rooms, 9.3.6, A.9.3.6.1 to A.9.3.6.5

EDUFIRE.IR

Exterior projections, 9.3.19, A.9.3.19.1, A.9.3.19.2
Fur storage vaults, 9.3.12, A.9.3.12
Glazing, sprinkler-protected, 9.3.15, A.9.3.15
Ground floors, exterior docks, and platforms, spaces under, 9.3.18
Heat-producing devices with composite wood joist construction, 9.3.1
Industrial ovens and furnaces, 9.3.8, A.9.3.8
Library stack areas, 9.3.7, A.9.3.7
Old-style sprinklers, 9.3.10(1), 9.3.12, A.9.3.12
Open-grid ceilings, 9.3.10, A.9.3.10
Platforms, spaces under, 9.3.18
Records storage, 9.3.7, A.9.3.7
Skylights, 9.3.16
Spaces above ceilings, 9.3.14, A.9.3.14.3
Stages, 9.3.13
Stairways, 9.3.4, 9.3.5, A.9.3.4.1.2, A.9.3.4.3, A.9.3.5
Vertical openings, 9.3.5, A.9.3.5
Vertical shafts, 9.3.3, A.9.3.3.2
Special sprinklers, 7.2.3.2, 9.5.6.3, Chap. 15, 20.6.6.5
Definition, 3.3.205.4.18
Special structures, D.1.1.2, D.2.2
Spools, see Wire/cable/spools
Spray application areas, 16.2.4.1, 26.4, A.26.4.1.1 to A.26.4.2.1(7)
Spray nozzles
Advanced light water reactor electric generating plants, 26.27.1.3(1)
Coal mines, 26.34.2.1.3.4
Cooking equipment protection, 8.9, A.8.9.2
Nitrate film storage vaults, 26.7.1.4.2 to 26.7.1.4.6, A.26.7.1.4.4, A.26.7.1.4.6
Stationary combustion engines and gas turbines protection, 26.6.2.1 to 26.6.2.3
Spray sprinklers, 20.3.2.2.4, 20.14.2.2.4, see also Control mode density/area (CMDA) sprinklers; Control mode specific application (CMSA) sprinklers; Extended coverage (EC) sprinklers; Quick-response (QR) sprinklers; Standard spray sprinklers
Definition, 3.3.205.4.19
Elevator hoistways, 9.3.6.1, 9.3.6.5, A.9.3.6.1, A.9.3.6.5
Obstructions to discharge, 9.5.5.3.3
Occupancy hazard fire control approach, 19.3, A.19.3.1.1 to A.19.3.3.4.2
Open-grid ceilings, 9.3.10(1)
Overhead doors, protection of, 9.5.5.3.3.1, 14.2.11.3.5
Pilot line detectors, use as, 8.10
Roof protection use, 8.7.8.6
Sprigs, 17.4.3.5.1, 17.4.3.7, 18.5.9.6, 27.4.3(16), 27.4.5.6(19), A.18.5.9.6
Definition, 3.3.204
Restraint of, 18.6.6, A.18.6.6
Sprinkler alarms, 16.11.1, 16.11.2, A.16.11.1.1, A.16.11.1.2, A.16.11.2, C.4, see also Waterflow alarms/ detection devices
Sprinklers, see also Concealed sprinklers; Control mode specific application (CMSA) sprinklers; Dry sprinklers; Early suppression fast-response (ESFR) sprinklers; Flush sprinklers; In-rack sprinklers; Old-style/conventional sprinklers; Outside sprinklers; Pendent sprinklers; Residential sprinklers; Sidewall sprinklers; Temperature ratings of sprinklers; Upright sprinklers
Automatic (definition), 3.3.205.1
Ceilings, piping above/below, see Ceilings
Characteristics, general, 3.3.205.2, A.3.3.205.2
Clearance to storage, see Clearance
Cornice, 8.7.8.5
Corrosion-resistant, see Corrosion-resistant sprinklers
Definitions, 3.3.205, A.3.3.205.2 to A.3.3.205.4.16
Discharge characteristics, 7.2.2, A.7.2.2.1
Existing system modifications, 29.3
Face sprinklers, 25.5.1.7, 25.8.2.4
Definition, 3.3.71, A.3.3.71
Hydraulic calculations, see Hydraulic calculations
Identification, 7.2.1, 7.2.2.1, A.7.2.1, A.7.2.2.1
Installation, see Installation
Limitations, 7.2.3
Location, see Location requirements, sprinkler
Open, 15.1
Painting, see Painting Pilot, 16.11.3.3.1
Positioning, 9.1.1, 9.5.1, 9.5.4, A.9.1.1, A.9.5.4.1
Protection area per sprinkler, 9.5.1.2, 9.5.1.3, 9.5.2, 10.2.4, 10.3.3, 11.2.2, 11.3.3, 13.2.5, 14.2.8, A.10.2.4.2.1, A.11.2.2.1, A.11.2.2.2.1, A.11.3.3.1, A.13.2.5, A.14.2.8.2.3
Protective caps and straps, removal of, 9.4.1.5, A.9.4.1.5.1, A.9.4.1.5.2
Reconditioned, 16.1.3.2, 29.3.1
Reinstallation, 29.3.2
Spacing, see Spacing, sprinklers
Spare, stock of, 16.2.7, 30.2.3, A.16.2.7.1 to A.16.2.7.7.1
Temperature ratings, see Temperature ratings of sprinklers
Thermal sensitivity, see Thermal sensitivity
Use of, 9.4, A.9.4.1.1 to A.9.4.3.1
Sprinkler systems, see also Acceptance, system; Antifreeze systems; Combined dry pipe-preaction sprinkler systems; Deluge sprinkler systems; Dry pipe sprinkler systems; Hydraulically designed systems; Marine systems; Pipe schedule systems; Preaction sprinkler systems; System protection area; Valves; Wet pipe sprinkler systems
Abandoned in place, 29.2.2
Components and hardware, Chap. 7, 30.2, A.30.2.1 to A.30.2.7.7
Protection for, see Protection for system components
Reconditioned components, 16.1.3, 29.2
Definition, 3.3.206, A.3.3.206
Design, see Design, sprinkler system Flushing, 16.6
Future upgrading of performance, B.2.1.5
Hose connections supplied by, 16.15.1.3(4)
Impairments, A.31.1
Limited area, 4.1.2
Maintenance, 30.9, Chap. 31
Nonfire protection connections to, 27.1.5, A.27.1.5
Nonsprinkler system components, support of, 4.9, A.4.9
Partial systems, 19.2.6.4(3), 30.1.4, A.30.1.4
Performance criteria, B.2
Protection, level of, 4.1
Requirements, Chap. 8
Size of, 8.2.3, 8.3.2.2, A.8.2.3
Working pressure, 7.1.2
Ss, 18.5.9.3, A.18.5.9.3.2, A.18.5.9.5
Definition, 3.3.207
Stable piles, Table 21.3.1, 21.3.2, A.21.3.2, A.22.1.5.4, A.23.4.1
Definition, 3.3.152, A.3.3.152
Stages (theatrical), 9.3.13
Stairways, 9.2.12, 9.3.4, 9.3.5, 10.2.6.2.1, 12.1.8.7.1, A.9.3.4.1.2, A.9.3.4.3, A.9.3.5, D.2.3.1.1, D.2.4.1.1
Marine systems, 30.4.5.2
Stair towers, 9.3.4.2.4, 27.5.1.6
Type 1, 30.4.10.3
Definition, 3.3.119.13
Standard (definition), 3.2.6
Standard spray sprinklers, Chap. 10, Table 20.12.2.6, see also Spray sprinklers
Cooking equipment and ventilation, 8.9.2.1
Definition, 3.3.205.4.20
Existing system modifications, 29.1.5.1, 29.6.3
Glazing, protection of, 9.3.15(1)
Standby emergency generators, 26.27.1.7
Standpipe systems, 16.15.2.2, 19.2.6.3.1, 19.2.6.4(1), 20.12.2.5(1), 26.27.2.1, 26.28.2, 26.34.1.2.1, 26.35.1.1.1, A.16.15.1.4, A.16.15.2.2, A.26.27.2.1.2
Static hydrants, 27.1.3(45)
Static pressure, 16.15.1.4(6), 17.4.3.4.4.1, 17.4.3.5.2.1, 27.4.5.4(2), 28.2.3.4.2, 28.2.4.4, A.5.2.2, A.6.6, A.8.6.3.2, A.28.2.3.4.2
Definition, 3.3.210

EDUFIRE.IR

Stationary combustion engines and gas turbines, 26.6, A.26.6.1
Steel
Bar joist construction, see Bar joist construction
Braces, seismic protection, Tables 18.5.11.8(a) to 18.5.11.8(f), Table 18.5.12.2(k)
Building, protection for
Control mode specific application (CMSA) sprinklers, 22.1.5.3
In-rack sprinkler systems, 25.1.4
Columns, 10.3.2(5), 20.14.2.2.4.1(5), 20.15, A.20.15.1, C.10
Compact storage modules, 21.12.4, 21.12.5, A.21.12.5
Hanger fasteners in, 17.2.3
High bay records storage, shelves for, 23.12.3
Marine decks, 30.4.1
Pipe, Table 7.3.1.1, 7.3.3.1, Table 7.4.1, 7.4.4, 16.3.1.1, 16.3.1.5, 16.3.2 to 16.3.4, 16.3.7, 16.3.8, 16.3.9.2 to 16.3.9.4, 16.8.2.1 to 16.8.2.3, 17.4.3.4.1, 17.4.3.5.1, 17.4.3.5.2.1, 17.4.4.3 to 17.4.4.5, 26.29.2.3, Table 27.2.4.9.4, A.16.3.2, A.16.3.9.4, A.16.8.2.1, A.16.8.2.2
Galvanized, 6.1.1.3, Table 7.3.1.1, 7.8.2, 9.4.4.4, 16.11.1.3, 16.11.1.4, 17.5.7.1, 26.16.2.6, 26.21.2.9.1, 27.2.1.2, Table 27.2.4.9.4, 30.2.4.1, A.26.16.2.6, A.26.29.2.3(1), A.30.2.4.1
Underground, 6.1.1.3, 16.4.2.4
Purlins, see Purlins
Retail shelving racks, plastics display/storage, 21.9.2, 21.9.3, 21.9.5, 21.9.6
Truss construction, see Trusses
Storage, A.16.15.1.4, see also Baled cotton; Bin box storage; High- piled storage; Miscellaneous storage; Palletized storage; Plastics storage; Rack storage; Roll paper storage; Shelf storage; Solid-piled storage; Tires
Arrangement, 20.5, A.20.5.3, A.20.5.5.1
Building height, 20.6.2, A.20.6.2
Ceiling slope, 20.6.1
Clearance to, see Clearance
Draft curtains, use of, 20.6.5, C.6
Early suppression fast-response (ESFR) sprinklers
Ceiling/roof heights, Table 14.2.8.2.1, A.14.2.4
Storage height, 14.2.9.1, A.14.2.9.1(3)
Excessive clearances, 25.9.5
Existing system modifications, 29.1.5, 29.6.2(3), 29.6.7
General requirements, Chap. 20
Hazardous Materials Code, 22.36
Height of, 20.6.2, 20.6.3, A.20.6.2
Idle pallets, see Pallets
Library stack areas, 9.3.7, A.9.3.7
Nitrate film, 26.7, A.26.7.1.3 to A.26.7.1.4.6
Organic peroxide formulations, 26.36.1.2
Oxidizer solids and liquids, indoor storage of, 26.36.1.3
Records storage, 9.3.7, A.9.3.7
Roof vents, use of, 20.6.5, C.6
Temperature rating of sprinklers, 9.4.2.7, A.9.4.2.7
Storage aids (definition), 3.3.211, see also Pallets
Strainers, 8.7.6, 8.9.10, 9.3.9.4, 9.4.4.2(3), 16.11.8.1, 16.11.8.2, 26.21.2.6, 27.2.3.3
Summary sheet, hydraulic calculations, 27.4.2, A.27.4.2
Supervision
Alarm service, 16.11.7.1, 16.11.7.2, 16.11.10(2), 19.3.2.5, 19.3.3.1.3
Definition, 3.3.119.11
Deluge systems, 8.3.3.1
High-rise buildings, D.1.1.2.1, D.2.2.1.1
Marine system piping, 30.3.3
Preaction systems, 8.3.2.4, 30.3.3, A.8.3.2.4
Valves, 16.9.3.3, A.16.9.3.3
Supervisory devices, 16.9.3.3, 19.3.2.5, 19.3.3.1.3, A.16.9.3.3
Definition, 3.3.213
Survival angle, 30.2.5.1(3)
Definition, 3.3.119.12
Suspended ceilings, 17.4.1.3.3.2 to 17.4.1.3.3.4, 26.30.2.1, Fig. 29.4.4, Fig. 29.4.5, Fig. A.9.2.1.17, A.9.3.11.1, A.17.4.1.3.3.3, A.17.4.1.3.3.4, A.18.4, A.19.3.3.3.1, A.20.8.1, see also Drop-out ceilings
Sway braces, 18.5, A.18.5, Annex E
Definition, 3.3.217
System protection area, see also Density/area method
Geometry of area of application, B.2.1.3
Level of protection, 4.1
Limitations, 4.5, A.4.5.1(3), A.4.5.6
Maximum protection area of coverage, 4.5, 9.1.1(2), 9.5.2.2, 10.2.4.2, 10.3.3.2, 11.2.2.2, 11.3.3.2, 12.1.7.4, 13.2.5.2.2, 14.2.8.2, A.4.5.1(3), A.4.5.6, A.10.2.4.2.1, A.11.2.2.2.1, A.12.1.1, A.14.2.8.2.3
Protection area per sprinkler, 9.5.1.2, 9.5.1.3, 9.5.2, 10.2.4, 10.3.3, 11.2.2, 11.3.3, 13.2.5, 14.2.4.2, 14.2.8, 15.2.2(4), A.10.2.4.2.1, A.11.2.2.1, A.11.2.2.2.1, A.11.3.3.1, A.13.2.5, A.14.2.8.2.3
Selection of area of application, B.2.1.2
System risers, see Risers
System working pressure, 7.1.2, 28.2.1.1 to 28.2.1.5, 29.7.1, A.28.2.1.5
Definition, 3.3.216
Underground pipe, 6.10.2.2.1, A.6.10.2.2.1

T

Tanks, A.16.9.7, A.18.2, see also Gravity tanks; Pressure tanks
Compressed gases and cryogenic fluids, 26.11
Cushion, 16.9.5.3
Elevated, 16.9.10.2.6
Hose demand and, 20.12.2.1, A.20.12.2.1
Technology, new, 1.7
Telecommunications facilities, 26.31
Television studio soundstages and production facilities, 26.19, A.26.19.2.4, A.26.19.2.5
Temperature characteristics, 7.2.4, A.7.2.4
Temperature ratings of sprinklers, 9.4.2, 19.3.3.2.7, 26.22.2.1.2(B), A.9.4.2.1 to A.9.4.2.5(1), see also High temperature-rated sprinklers; Intermediate temperature-rated sprinklers; Ordinary temperature-rated sprinklers
Control mode specific application (CMSA) sprinklers, 13.2.3
Early suppression fast-response (ESFR) sprinklers, 14.2.6
Location, 8.10.4
Marine systems, 30.4.1
Special sprinklers, 15.2.2(2)
Terminals
Airport, 26.25, A.26.25.1.2
Marine, 26.22, A.26.22.1.1 to A.26.22.2.1.2(B)(5)
Test blanks, 28.2.1.11, A.28.2.1.11
Test connections, 8.2.3.7, 8.4.6, 8.9.11, 16.14, A.8.2.3.7, A.16.14.2 to A.16.14.5.1
Alarm bypass, 16.11.5
Deluge systems, 16.14.4
Dry pipe systems, 16.14.2, A.16.14.2
Identification, 16.9.12, A.16.9.12
Main drain, 16.10.4.6, A.16.10.4.6
Marine systems, 30.4.13
Preaction systems, 16.14.3
Wet pipe systems, 16.14.1
Tests, 9.1.1(5), 9.1.1(6), Chap. 31, see also Flow tests; Flushing tests; Hydrostatic tests
Apparatus/devices for, 8.3.1.7, A.8.3.1.7.4
Automated inspection and testing, 28.3
Definition, 3.3.9
Combined dry pipe-preaction systems, 8.4.6
Deluge systems, 8.3.1.7, A.8.3.1.7.4
Dry pipe and double-interlock preaction system air, 28.2.1.4, 28.2.2, 29.7.2
Existing system modification, 29.7
Main drain valve, 28.2.3.4, A.28.2.3.4.2
Marine systems, 30.8, 30.9
Preaction systems, 8.3.1.7, A.8.3.1.7.4
System operational, 28.2.3, 30.8.3, A.28.2.3.2 to A.28.2.3.4.2
Water disposal after, 28.2.1.10

EDUFIRE.IR

Test valves, 16.7(3), 16.9.1.1, 16.9.12, 30.2.6.2, 30.7.3.11, A.16.9.12
Textile materials/products, Table A.20.4(b), Table A.20.4.3, Table A.20.4.4, Table A.20.4.5.1
Thermal barriers, see also Marine thermal barriers
Definition, 3.3.218
Limited-combustible material, 9.2.4.1.1, A.9.2.4.1.1
Residential board and care occupancies, D.1.1.8.2, D.2.22.2.2
Thermal sensitivity, 9.4.3, 15.2.1(4), A.9.4.3.1, see also Temperature ratings of sprinklers
Threaded pipe and fittings, 6.3.4, 7.5.1, 9.4.5
Thrust blocks, 6.6.1, A.6.6.1
Tiered storage (baled cotton), Table 21.10.1
Definition, 3.3.219
Time limitation, combined dry pipe-preaction systems, 8.4.5
Tires, rubber
Banded, Fig. A.3.3.185(e), Fig. A.3.3.185(f)
Definition, 3.3.15
Definition, 3.3.186
Existing system modifications, 29.1.5, 29.6.2(3), 29.6.7
Storage, 20.4.9, 20.5.4, 20.6.6.8, 20.9.2.5, Table 20.12.2.6, 22.6, 23.8, 25.2.1.1
Ceiling systems, 21.6.1
Columns, protection for, 20.15.2
Discharge criteria, Table 4.3.1.7.1
In-rack systems, 25.2.1.1, 25.2.2.1.1, 25.2.2.1.2, 25.2.3.6, 25.5.2.1.3, 25.9.6, Table 25.12.2.1, Table 25.12.3.1
Miscellaneous, 4.3.1.6, Table 4.3.1.7.1
Definition, 3.3.124, A.3.3.124
Rack illustrations, 3.3.185, A.3.3.185, Figs. A.3.3.185(a) to A.3.3.185(c)
Sprinklers, clearance for, 9.5.6.5
Temperature rating of sprinklers, 9.4.2.7, A.9.4.2.7
Tissue paper, Table 4.3.1.7.1, 20.4.10.4, 20.5.5.2, 20.5.5.5, 20.5.5.6, 21.7.2, Table 21.7.3(a), Table 21.7.3(b), 21.7.7, Table 22.7, Table 23.9, A.20.4.10
Towers
Stair, 9.3.4.2.4, 27.5.1.6
Water cooling, see Water cooling towers
Transverse flue spaces, 20.5.3.1.2, 20.5.3.3.2, 20.15.1, 23.11.1, 25.5.1.2 to 25.5.1.4, 25.6.4.3, 25.8.1.4.2, 25.8.1.8.1, 25.8.3.2.5(2), 25.8.3.3.3(A), 25.9.2.1.3, Table 25.9.2.3.1, 25.9.5.2, 25.9.5.3, A.20.15.1, A.23.7, A.25.2.3.3.1, A.25.5.1.2, C.13, C.16
Carton records storage, 21.11.2, 21.11.6.3.4, 21.11.6.4, A.21.11.6.3.5
Definition, 3.3.220
Early suppression fast-response (ESFR) sprinklers, 21.8.1.2(5)
High bay records storage, 23.12.3
Oxidizer solids and liquids storage, 26.36.1.3.3(C)
Plastics display/storage, retail stores, 21.9.1(7), 21.9.1(11)
Slatted shelves, 23.13.2(4)
Trapeze hangers, 17.3, 17.4.1.3.2, 17.4.4.7, A.17.1.4.1, A.17.3, A.18.5.5.10
Tripping devices, combined systems, 8.4.3.3, 8.4.3.4
Trusses, 9.2.1.17, 11.2.5.2.1.6, 11.3.2(5), 12.1.10.2.1.5, 12.1.10.2.1.6, 13.2.8.2.1.3, 14.2.8.2.3, 14.2.8.2.4, 14.2.9.1, 14.2.11.1.1, A.9.2.1.17, A.11.2.5.2.1.3, A.13.2.8.2.1.3, A.14.2.8.2.3, A.14.2.9.1(3), A.18.4.11
Combustible concealed spaces, 9.3.2, 10.2.6.1.4, 19.4.3.4, A.10.2.6.1.4.3 to A.10.2.6.1.4.5
Definition, A.3.3.41.1(9)
Open, 14.2.11.3.2
Truss webs and chords, 9.5.5.2.2, 10.3.6.2.1.3, 11.2.5.2.1.3, 11.3.6.2.1.3, 12.1.10.2.1.3, 12.1.11.2.1.3, A.10.3.6.2.1.3, A.11.2.5.2.1.3, A.11.3.6.2.1.3, A.12.1.10.2.1.3, A.12.1.11.2.1.3
Tube, see Pipes and piping
Turbine-generators, 26.27.1.5 to 26.27.1.7, A.26.27.1.5, A.26.27.1.6
Turbines
Standby combustion, 26.27.1.7
Stationary gas, installation and use of, 26.6, A.26.6.1
Type 1 stair, 30.4.10.3
Definition, 3.3.119.13

U

U-hooks, 17.2.1.4, 17.2.4.2, 18.5.5.11.1, 18.5.5.11.2, 18.6.1(2), 30.2.5.4, Fig. A.17.1, Fig. A.17.4.3.4.4(b), A.30.2.5.4
Underground pipe, 5.1.4, 5.1.6, Chap. 6, A.5.1.6.2
Backfilling, 6.9, A.6.9.3
Contractor's material and test certificate, Fig. 6.10.1
Cover, depth of, 6.4.2, A.6.4.2
Damage, protection against, 6.4.2, A.6.4.2
Fire department connections, 6.1.1.3, 16.12.5.5, A.16.12.5.5
Fittings, see Fittings
Freezing, protection from, 6.4.2.1, A.6.4.2.1.1
Installation, 6.8
Joints, see Joints Lining of, 6.1.3, A.6.1.3
Listed, 6.1.1.1, 6.1.1.2, 6.2.1.2
Loop systems, 26.27.1.2, A.6.10.2.1
Steel, 6.1.1.3, Table 6.1.1.3, 16.4.2.4
Testing and acceptance, 6.10, A.6.10.2.1 to A.6.10.2.3
Working pressure, 6.10.2.2.1, A.6.10.2.2.1
Unions, 16.8.4, A.16.8.4
Unit load, 20.3.4, 20.4.1(3)
Definition, 3.3.222
Solid unit load of nonexpanded plastic, 20.3.4, Table 21.3.1
Definition, 3.3.200
Units of measurement, 1.6.1, A.1.6.1.4
Unobstructed construction, Table 10.2.4.2.1(a), 10.2.6.1.1, 11.2.1, Table 11.2.2.1.2, 11.2.4.1.1, 11.3.2, Table 11.3.3.2.1, Table 13.2.5.2.1, 13.2.6.1.1, 13.2.7.1.1, 14.2.4, Table 14.2.8.2.1, A.14.2.4
Definition, 3.3.41.2, A.3.3.41.2
Unstable piles, Table 21.3.1, 21.3.2, A.21.3.2, A.22.1.5.4, A.23.4.1
Definition, 3.3.153, A.3.3.153
Upright sprinklers, 9.4.1.3, 10.2, A.9.4.1.3, A.10.2.4.2.1 to A.10.2.9.2(4)
Alternative sprinkler system designs, Table 24.2.1, Table 24.3.1, Table 24.3.2(a), 24.3.3
Ceiling pockets, 10.2.9, 11.2.8, A.10.2.9.1, A.10.2.9.2(4), A.11.2.8.2(4)
Clearance to storage, 10.2.8, 11.2.6, 11.2.7, A.11.2.6, A.11.2.7.1
Cloud ceilings, 9.2.7.2.1
Compact storage, 21.12.3
Concealed spaces, in, 10.2.6.1.4, A.10.2.6.1.4.3 to A.10.2.6.1.4.5
Control mode density area (CMDA) sprinklers, 21.1.3, 21.1.4
Control mode specific application (CMSA) sprinklers, Tables 22.2 to 22.5
Definition, 3.3.205.3.6
Deflector position, 10.2.6, 11.2.4, 12.1.8.1, 14.2.10.1.4, 14.2.10.1.5, A.10.2.6.1.2(5) to A.10.2.6.1.4.5, A.11.2.4.1.1.4(A) to A.11.2.4.1.3
Dry pipe systems, 8.2.2(1), 8.4.2.4(1)
Early suppression fast-response (ESFR) sprinklers, Table 23.3.1, Table 23.4.2, Table 23.5.1, Table 23.6.1, Table 23.8, Table 23.9
Elevator hoistways, 9.3.6.5, A.9.3.6.5
Exposure protection systems, 8.7.9.3
Extended coverage (EC), 11.2, Table 24.2.1, Table 24.3.1, A.11.2.2.1 to A.11.2.8.2(4)
Hangers, clearance to, 17.4.3.3
Idle pallets, wood, Table 20.14.1.2(c)
In-rack, 25.3.1
Obstructions to discharge, 10.2.6.1.2, 10.2.7, 11.2.5, 12.1.10, 13.2.8.2.2, A.10.2.6.1.2(5),

EDUFIRE.IR

A.10.2.7.1.2 to A.10.2.7.3.2, A.11.2.5.1.2 to A.11.2.5.3.2, A.12.1.10.2.1.9 to A.12.1.10.2.3
Oxidizer solids and liquids storage, 26.36.1.3.4.4(F)
Preaction systems, 8.3.2.5(1), 8.4.2.4(1)
Protection areas, 10.2.4, 11.2.2, A.10.2.4.2.1, A.11.2.2.1, A.11.2.2.2.1
Protective caps and straps, removal of, 9.4.1.5.3
Residential, 12.1.8.1, 12.1.8.7, 12.1.9, 12.1.10, A.12.1.10.2.1.9 to A.12.1.10.2.3
Roof protection use, 8.7.8.6
Spacing, 10.2.5, 11.2.3, A.10.2.5.2.2, A.10.2.5.2.3
Terminals, piers, and wharves, 26.22.2.1.2
Utility gas plants, LP-Gas at, 26.12

V

Valve rooms, 8.2.5.2, 8.3.1.8.2
Valves, 7.6, 8.16.1, 16.9, A.16.9.3 to A.16.9.12.3.1, see also Alarm valves; Check valves; Control valves; Drain valves; Dry pipe valves; Floor control valve assemblies; Indicating valves; Preaction valves; Pressure-reducing valves; Test valves
Abandoned in place, 29.2.2 to 29.2.4
Accessibility, 16.1.1, 16.12.6.1, 16.14.3.4, A.16.1.1
Air venting, 16.7, A.16.7
Antifreeze systems, 8.6.3, A.8.6.3.2 to A.8.6.3.6
Automated, 16.9.4
Backflow prevention, 16.14.5.1
Combined systems, 8.4.3, A.8.4.3.2
Deluge, 16.11.5.1, 16.11.5.2, 28.2.3.3.1
Equivalent pipe lengths, 27.2.3
Fire department connections, 16.12.6
Hose connections, 16.15.1.1.1, 16.15.1.1.3, 16.15.1.3(3)
Hydraulic calculation procedures, 27.2.3.3
Identification, 16.9.10.3, 16.9.12, 30.2.6.3, A.16.9.12
Low-pressure blowoff, 9.4.2.5(3)
Marine systems, 30.2.6, 30.4.10.3, 30.7.4.2, 30.8.3.1, A.30.2.6.1
Outside sprinklers, 8.7.2.2, 8.7.3.1, 8.7.4.1, 8.7.4.2, A.8.7.4.2.1, A.8.7.4.2.3
In pits, 16.9.7, 16.9.10, A.16.9.7, A.16.9.10.2
Pressure requirements, 16.9.1.2
Reconditioned, 16.1.3.1, 29.2.1
Shutoff, 16.12.6.2, 16.13.2, 16.14.3.4
Supervision, 16.9.3.3, 30.4.10.3, A.16.9.3.3
Underground piping, 6.8.1, 6.8.3 to 6.8.5, 6.8.7, 6.8.10
Wafer-type, 16.9.2
Water cooling towers, 26.21.2.5
Vaults
Film storage, 26.7.1.3, A.26.7.1.3
Fur storage, 9.3.12, 15.4.3, A.9.3.12
Velocity pressure formula, 27.2.2.2
Ventilation, cooking areas, 8.9, 9.4.2.5(7), A.8.9.2
Venting, air, 8.1.5, 16.7, A.16.7
Vents, roof, 20.6.5, 20.6.6.3, A.20.6.6.2, C.6
Vertical barriers, 23.7.8, 25.8.1.2(2), 26.36.1.3.4.4(C), 26.36.1.3.4.4(E), A.23.7
Vertical obstructions to sprinklers, 10.2.7.2.2, 10.3.6.2.2, 11.2.5.2.2, 11.3.6.2.2, 12.1.10.2.2, 12.1.11.2.2, A.10.2.7.2.2.1, A.10.3.6.2.2.1, A.11.3.6.2.2.1, A.12.1.11.2.2, A.14.2.11
Vertical openings, 9.3.5, A.9.3.5
Vertical shafts, 9.2.11, 9.2.14, 9.3.3, 9.3.9.1.2, 19.3.3.1.5.2(8), 20.7.2(7), A.9.3.3.2, D.2.3.1.1, D.2.4.1.1, see also Vertical openings
Accessibility, 9.3.3.1.1, 9.3.3.1.2, 9.3.3.3
Building service chutes, 19.3.3.4.1
Gravity chutes, 26.15.2.2.1, 26.15.2.2.3
Marine systems, 30.4.5
Mercantile occupancies, D.1.1.9.1, D.1.1.10.1, D.2.23.2.1, D.2.24.2.1
Pipe chases, 9.2.1.15
Waste and linen chutes, 26.15.2.2, A.26.15.2.2

W

Wafer-type valves, 16.9.2
Walkways, sprinklers under, 21.2.4.1.1, 21.2.4.1.2(2)
Walls
Deflector distance from, 10.3.5.1.2, A.10.3.5.1.2.1
Distance from sprinklers, 9.5.3.2, 9.5.3.3, 10.2.5.2, 10.2.5.3, 10.3.4.2, 10.3.4.3, 11.2.3.2, 11.2.3.3, 11.3.4.2, 11.3.4.3, 11.3.5.1.2, 12.1.7.2, 12.1.8.4 to 12.1.8.6, 13.2.6.2, 13.2.6.3, 14.2.9.2, 14.2.9.3, A.10.2.5.2.2, A.10.2.5.2.3, A.11.3.5.1.2.1
Pipe openings through, clearance for, 18.4, A.18.4
Sprinkler-protected glazing, 9.3.15, A.9.3.15
Washers, underground joints, 6.6.2.1.4, 6.6.2.4
Waste compactors, 26.15.2.4
Waste handling systems, 26.15, A.26.15.2.2
Water additives, see Additives
Water basin covers, 2.21.2.4, 26.21.1.5, A.26.21.1.5
Water cooling towers, 8.10.9.4, 26.21, A.26.21.1.1.1 to A.26.21.2.9.3
Corrosion protection, 26.21.2.9, A.26.21.2.9.2
Counterflow, 26.21.1.2.1, 26.21.2.1, A.26.21.1.1.1, A.26.21.2.1
Crossflow, 26.21.1.1.2, 26.21.1.2.2, 26.21.1.2.3, 26.21.2.2, A.26.21.1.1.2, A.26.21.2.2
Exposure protection, 26.21.1.6
Fan decks, 26.21.1.2.1, 26.21.1.2.2, 26.21.1.3, 26.21.1.4, 26.21.2.1.1, 26.21.2.2.1, 26.21.2.3, A.26.21.2.3
Fan drive motor, protection for, 26.21.2.8
Heat detectors, 26.21.2.7
Minimum rate of application, 26.21.1.2
Types of systems, 26.21.1.1, A.26.21.1.1.1, A.26.21.1.1.2
Valves, 26.21.2.5
Water basin covers, 26.21.2.4, A.26.21.2.4
Water supply, 26.21.1.7, A.26.21.1.7.1.1 to A.26.21.1.7.2.2
Water curtains, 19.4.3
Water demand, 19.2.4, 19.3.1.1, 19.3.3.2, 27.2.4.6.4, see also Density/area method; Hydraulically calculated water demand flow rate; Water supplies
Building and storage height, 20.6.3.1
Ceiling sprinklers, rack storage, 21.4.1.1 to 21.4.1.3, 21.5.1.1, 25.2.3.1.8, A.21.4.1.1 to A.21.4.1.2.1, C.14, C.15, C.23
Concealed spaces or under obstructions, 27.2.4.7.4
Dry pipe systems, 8.2.3.6 to 8.2.3.8, 19.3.3.2.5
High temperature-rated sprinklers, 21.1.8
Hose allowance, 19.2.6, 27.3
Hypobaric facilities, 26.33.1.11, A.26.33.1.11
In-rack sprinklers, 27.2.5.2, A.25.2.3.3.1
Marine systems, 30.5.1.2, 30.5.2, 30.7.3.3, A.30.5.2, A.30.7.3.3
Metal/nonmetal mining and metal mineral processing facilities, 26.35.1.1
Ordinary temperature-rated sprinklers, 21.1.8
Palletized, solid pile, bin box, or shelf storage, C.22, C.23
Pipe schedule method, 19.3.2
Preaction systems, 19.3.3.2.5
Rack storage systems, 21.4.1.1, A.21.4.1.1, C.14, C.15
Room design method, 19.3.3.3
Solvent extraction facilities, 26.35.1.3.9
Spray application areas, 26.4.2.1(6)
Water curtains, 19.4.3.3

EDUFIRE.IR

Waterflow alarms/detection devices, 7.7, 16.11.1.2, 16.11.1.3, 16.11.2, 26.24.2.2.1, 30.12.2 to 30.4.12.5, A.16.11.1.2, A.16.11.2, C.4
Definition, 3.3.226
Electrically operated, 16.11.7.2
Flow tests, 28.2.3.1, 30.8.2
High-rise buildings, 16.11.10, A.16.11.10, D.1.1.2.1, D.2.2.1.1
Indicating control valves, 16.11.6
In-rack sprinkler systems, 25.1.3.3, A.25.1.3.3
Local, 16.11.2.1
Mechanically operated, 16.11.8.1
Supervision, 19.3.2.5, 19.3.3.1.3
Test connections, 16.11.5
Water motor-operated devices, see Waterflow alarms/detection devices
Water spray systems, 26.6.2, 26.21.1.6.1, 26.27.1.1(1), 26.27.1.7 to 22.27.1.9, 26.36.1.2.1, A.26.5.1, see also Deluge sprinkler systems; Spray nozzles
Water supplies, 4.2(3), 4.2(4), 4.6, Chap. 5, 19.2.3, 19.2.5, 19.2.6, 19.3.3.2.1, 20.8.1, 20.8.2, 27.2.1.6, A.4.2(4), A.4.6.1.1, A.20.8.1, see also Mains; Water demand
Aircraft engine test facilities, 26.26.1.2
Airport terminal buildings, fueling ramp drainage, and loading walkways, 26.25.1.4
Alternative sprinkler system designs, 24.1.5, 24.4
Arrangement, 5.1.6, A.5.1.6.2
Capacity, 4.6.1, 5.1.2, 5.2.4.2, A.4.6.1.1
Ceiling sprinklers, 25.2.1.6
Coal mines, 26.34.1.3.2
Concealed spaces, sprinklers in, 19.4.3.4.3
Control valves for, see Control valves Corrosive properties, 4.2(4), 16.4.2.2, A.4.2(4)
Domestic, connections to, 26.4.1.5, B.1
Duration, 20.12, A.20.12.2.1, A.20.12.2.2
Exposure protection sprinkler systems, 8.7.9.4, 8.7.9.5
Hypobaric facilities, 26.33.1.13 to 26.33.1.15
Liquefied natural gas (LNG), production, storage, and handling of, 26.13.1
LP-Gas at utility gas plants, 26.12.1.1
Marine, 30.7, A.30.7.2.7 to A.30.7.4.6
Definition, 3.3.119.10
Metal/nonmetal mining and metal mineral processing facilities, 26.35.1.1
Meters, 5.1.7, A.5.1.7
Multiple hazard classifications, systems with, 20.10.4, A.20.10.4(3)
Nitrate film, rooms/vaults containing, 26.7.1.2, 26.7.1.4.8
Nuclear power plants, 26.27.1.1, 26.27.2.1.2, 26.28.1, A.26.27.1.1, A.26.27.2.1.2
Number of supplies, 5.1.1
Occupancy classifications, 19.3.2.1
Outside sprinklers, 8.7.2, 19.4.2.2, A.8.7.4.2.1, A.8.7.4.2.3
Oxygen-fuel gas systems, 26.9.2.1
Pendent sprinklers, return bend requirement, 16.3.11.1
Private fire service mains, see Private fire service mains
Rack storage systems, 24.1.5, 25.2.3.6.4, 25.8.2.9, 25.8.2.10, A.23.7
Raw water sources, 5.2.6
Definition, 3.3.174, A.3.3.174
Residential board and care occupancies, D.1.1.8.2(2), D.1.1.8.2.2(1)
Residential sprinklers, 19.4.1.6
Roll paper storage, 20.5.5.2.1
Rubber tire storage, 20.5.4.1, 20.15.2.5, 25.2.3.6.4
Spray application areas, 26.4.1.4, 26.4.1.5
Storage, requirements for, C.8
Treatment, 4.6.2, 5.1.5, A.5.1.5
Types, 5.2, A.5.2.1 to A.5.2.4.3
Water-cooling towers, 26.21.1.6.2.2, 26.21.1.7, A.26.21.1.7.1.1 to A.26.21.1.7.2.2
Water curtains, 19.4.3.3
Waterworks, connections to, 5.1.8, 5.2.1, 5.2.2, A.5.1.8, A.5.2.1, A.5.2.2
Waterworks systems, connections to, 5.1.8, 5.2.1, 5.2.2, A.5.1.8, A.5.2.1, A.5.2.2
Wax products, Table A.20.4.5.1, Table A.20.4(b)
Welded pipe, 7.5.2, 16.3.2, 17.4.4.2, 29.1.7, A.7.5.2.2, A.16.3.2
Welding
Modification or repair of sprinkler systems, 29.1.7
Oxygen-fuel gas systems for, 26.9
Welding studs, 17.2.2.9.1, 17.2.3.1, A.17.2.3.1
Wet barrel hydrants (definition), 3.3.101.6
Wet pipe sprinkler systems, 8.1, 16.3.11.5, 20.13, A.8.1.1.2, A.20.13.2
Air venting, 8.1.5, 16.7, A.16.7
Alternative sprinkler system designs, Table 24.2.1, Table 24.3.1, Table 24.3.2(a), Table 24.3.2(b)
Baled cotton storage, Table 21.10.1
Cleanrooms, 26.23.2.1, A.26.23.2.1
Connections, 20.12.2.5
Control mode density area (CMDA) sprinklers, 21.2.2.5
Control mode specific application (CMSA) sprinklers, 13.2.2, 13.2.3.3, Tables 22.2 to 22.7
Cultural resource properties, 26.29.1.3.4
Definition, 3.3.206.10
Drainage, 16.10.2, 16.10.5, A.16.10.5.2.1
Dry sprinklers attached to, 15.3.1, 30.4.8, A.15.3.1
Early suppression fast-response (ESFR) sprinklers, 14.2.2, 23.13, 23.13.2, A.23.13.1
Fire department connections, 16.12.5.2(1), 16.12.5.3, 16.15.2.1
Glazing, sprinkler-protected, 9.3.15(2)
High bay records storage, 23.12.3
Hose connections, 16.15.1.4, 19.2.6.4, A.16.15.1.4
In-rack sprinkler systems, 25.8.2.2
K-factors less than K 5.6, 9.4.4.2(2)
Marine systems, 30.4.8, 30.4.10.1(4)
Organic peroxide formulations, 26.36.1.2.2(1)
Plastics display/storage, retail stores, 21.9
Pressure gauges, 8.1.1, A.8.1.1.2
Quick-response (QR) sprinklers used in, 19.3.3.2.3.1(1)
Relief valves, 8.1.2
Residential sprinklers used in, 12.1.3
Slatted shelves, rack storage, 21.8.1.2
Spray application areas, 26.4.1.1, 26.4.1.7(2), A.26.4.1.1
Test connections, 16.14.1
Water-cooling towers, 26.21.1.1(1), 26.21.1.7.2, A.26.21.1.7.2.1, A.26.21.1.7.2.2
Waterflow detecting devices, 16.11.3.1, 16.11.3.2.2, 16.11.3.4, A.16.11.3.4
Water supply connections, 16.9.5.5, 16.9.6.4, A.16.9.5.5
Wharves, 26.22, A.26.22.1.1 to A.26.22.2.1.2(B)(5)
Window protection, 8.7.8.4
Atriums, D.1.1.1.1, D.2.1.2.1
Marine systems, 30.4.3, 30.5.2, 30.6.2, A.30.5.2
Show windows, sprinklers under, 9.4.2.5(6)
Sprinkler-protected glazing, Table 8.7.9.1, 8.7.9.6, 8.7.9.7, 9.3.15, A.9.3.15
Wire/cable/spools, Table A.20.4.1, Table A.20.4.2, Table A.20.4.4, Table A.20.4.5.1, Table A.20.4(b)
Wood
Fasteners in, 17.2.4, Tables 18.5.12.2(g) to 18.5.12.2(j), Table 18.5.12.2(l), Table 18.5.12.2(m), 18.5.12.4, 18.5.12.5, A.18.5.12, Fig. A.18.5.12(b), A.18.5.12.4
Fire retardant-treated, 9.2.1.12, 10.2.6.1.4.6, 20.7.2(5), A.9.2.1.12
Products, Table A.20.4.2, Table A.20.4.3, Table A.20.4.4, Table A.20.4(b)
Wood joist construction, 12.1.10.2.1.6, 17.2.4.6, A.11.2.5.2.1.3, see also Bar joist construction
Composite wood joist construction, 9.2.1.6, 9.2.1.14, 9.2.1.17, 9.2.1.18, 9.3.1, A.9.2.1.17, A.9.2.1.18
Definition, A.3.3.41.1(3)

EDUFIRE.IR

Concealed spaces, 9.2.1.5, 9.2.1.8, 9.2.1.9, 9.2.1.14, 9.2.1.16 to 9.2.1.18, 9.3.2, 10.2.6.1.4, 19.3.3.1.5.2, 19.4.3.4, A.9.2.1.5, A.9.2.1.17, A.9.2.1.18, A.10.2.6.1.4.3 to A.10.2.6.1.4.5
Control mode specific application (CMSA) sprinklers, 22.1.5, 25.2.4.1.1, A.13.2.8.2.1.3, A.22.1.5.4
Definition, A.3.3.41.1
Double joist obstructions to sprinklers, 10.2.6.1.5
Piers/wharves sprinkler installation, 26.22.2.1.2(B)
Wood pallets, 20.3.2.1, 20.4.1(1), Table A.20.3
Definition, 3.3.147.5
Idle, Table 20.12.2.6, 20.14.1, A.20.14, A.20.14.1.1, A.21.1.2, C.7
Wood truss construction, see Trusses
Working plans, 27.1, A.27.1
Worksheets, hydraulic calculations, 27.4.3, A.27.4.3

Y

Yard mains, 20.12.2.3, 26.27.1.2, 26.27.2.1, A.26.27.2.1.2

EDUFIRE.IR

This roadmap has been compiled to assist users familiar with the 2016 edition of the *Standard for the Installation of Sprinkler Systems* with locating material in the 2019 edition. It is provided for information only and should not be relied upon as the only means of determining the disposition of requirements.

An asterisk on a section number indicates that there is explanatory material for that section in Annex A. While annex sections are not included in this table, all retained annex sections have been moved with the parent paragraph.

2016 Edition Section Numbers	2019 Edition Section Numbers
Chapter 1 Administration	**Chapter 1 Administration**
1.1*	1.1*
1.1.1	1.1.1
1.1.2	1.1.2
1.1.3*	1.1.3*
1.2	1.2
1.2.1	1.2.1
1.2.2	1.2.2
1.3	1.3
1.3.1	1.3.1
1.3.2	1.3.3
1.4	1.4
1.4.1	1.4.1
1.4.2	1.4.2
1.4.3	1.4.3
1.5	1.5
1.5.1	1.5.1
1.5.2	1.5.2
1.6	1.6
1.6.1	1.6.1
1.6.1.1	1.6.1.1
1.6.1.2	1.6.1.2
1.6.1.3	1.6.1.3
1.6.1.4	1.6.1.4
1.6.2	1.6.2
1.6.3*	1.6.3*
1.7	1.7
1.7.1	1.7.1
1.7.2	1.7.2
Chapter 2 Referenced Publications	**Chapter 2 Referenced Publications**
Chapter 3 Definitions	**Chapter 3 Definitions**
3.1	3.1
3.2	3.2
3.2.1*	3.2.1*
3.2.2*	3.2.2*
3.2.3*	3.2.3*
3.2.4	3.2.4
3.2.5	3.2.5
3.2.6	3.2.6
3.3	3.3
3.3.1	3.3.118.1
3.3.2*	3.3.16
3.3.3	3.3.24

2016 Edition Section Numbers	2019 Edition Section Numbers
3.3.4*	3.3.25*
3.3.5	3.3.26
3.3.5.1	3.3.33
3.3.5.2	3.3.26.1
3.3.5.3	3.3.26.2
3.3.5.4	3.3.26.3
3.3.5.5	3.3.26.4
3.3.6	3.3.39
3.3.7*	3.3.46*
3.3.8*	3.3.57*
3.3.9	3.3.58
3.3.10	3.3.62
3.3.11	3.3.73
3.3.12	3.3.76
3.3.13	3.3.86
3.3.14	3.3.93
3.3.15	3.3.104
3.3.16*	3.3.114*
3.3.17	3.3.129
3.3.18	3.3.133
3.3.18.1	3.3.133.1
3.3.18.2	3.3.133.2
3.3.19*	3.3.174*
3.3.20	3.3.189
3.3.21*	3.3.195*
3.3.22	3.3.196
3.3.23*	3.3.206*
3.3.24	3.3.216
3.3.25	3.3.218
3.4	Deleted
3.4.1	3.3.206.1
3.4.1.1	3.3.160
3.4.2	Deleted
3.4.3	3.3.206.2
3.4.4	3.3.206.3
3.4.5	3.3.206.4
3.4.6*	3.3.206.5*
3.4.7*	3.3.206.6*
3.4.8	3.3.206.7
3.4.9	3.3.206.8
3.4.10*	3.3.206.9*
3.4.11	3.3.206.10
3.5*	Deleted
3.5.1	3.3.2
3.5.2	3.3.3
3.5.3	3.3.7
3.5.4	3.3.19

2016 Edition Section Numbers	2019 Edition Section Numbers
3.5.5	3.3.53
3.5.6	3.3.68
3.5.7	3.3.72
3.5.8	3.3.78
3.5.9	3.3.180
3.5.10	3.3.181
3.5.11	3.3.204
3.5.12	3.3.213
3.5.13	3.3.215
3.5.14	3.3.226
3.6	3.3.205
3.6.1*	3.3.205.2*
3.6.2	3.3.205.3
3.6.2.1	3.3.205.3.1
3.6.2.2	3.3.205.3.2
3.6.2.3	3.3.205.3.3
3.6.2.4	3.3.205.3.4
3.6.2.5	3.3.205.3.5
3.6.2.6	3.3.205.3.6
3.6.3	Deleted
3.6.3.1	3.3.205.4.3
3.6.3.2*	3.3.205.4.4*
3.6.3.3	3.3.205.4.7
3.6.3.4	3.3.205.4.8
3.6.3.5	3.3.205.4.12
3.6.3.6	3.3.205.4.13
3.6.4	Deleted
3.6.4.1*	3.3.205.4.1*
3.6.4.2*	3.3.205.4.2*
3.6.4.3*	3.3.205.4.5*
3.6.4.4	3.3.205.4.6
3.6.4.5	3.3.205.4.9
3.6.4.6	3.3.205.4.10
3.6.4.7	3.3.205.4.11
3.6.4.8*	3.3.205.4.16*
3.6.4.8.1*	3.3.205.4.14*
3.6.4.8.2	3.3.205.4.15
3.6.4.9	3.3.205.4.17
3.6.4.10	3.3.205.4.18
3.6.4.11	3.3.205.4.19
3.6.4.11.1	3.3.205.4.20
3.7	3.3.42
3.7.1*	3.3.41.1*
3.7.2*	3.3.41.2*
3.8	3.3.205*
3.8.1	3.3.205.1*
3.8.1.1	3.3.6

EDUFIRE.IR

2016 Edition Section Numbers	2019 Edition Section Numbers
3.8.1.2	3.3.49
3.8.1.3	3.3.51
3.8.1.4	3.3.74
3.8.1.5	3.3.75
3.8.1.6	3.3.100
3.8.1.7	3.3.102
3.8.1.8	3.3.103
3.8.1.9	3.3.205.1.9*
3.8.1.9.1	3.3.179
3.8.1.9.2	3.3.210
3.8.1.10	3.3.161
3.8.1.11*	3.3.163*
3.8.1.12	3.3.166
3.8.1.13	3.3.173
3.8.1.14	3.3.205.1.14*
3.8.1.14.1	3.3.80
3.8.1.14.2	3.3.82
3.8.1.14.3	3.3.105
3.8.1.15	3.3.205.1.15*
3.8.1.15.1	3.3.28
3.8.1.15.2*	3.3.106*
3.8.2	3.3.205.2*
3.8.2.1	3.3.101
3.8.2.1.1	3.3.101.1
3.8.2.1.2	3.3.101.2
3.8.2.1.3	3.3.101.3
3.8.2.1.4	3.3.101.4
3.8.2.1.5	3.3.101.5
3.8.2.1.6	3.3.101.6
3.9	3.3.205*
3.9.1*	3.3.205.1**
3.9.1.1	3.3.22
3.9.1.2*	3.3.21*
3.9.1.3	3.3.23
3.9.1.4	3.3.29
3.9.1.5	3.3.35
3.9.1.6	3.3.36
3.9.1.7	3.3.37
3.9.1.8*	3.3.39*
3.9.1.9*	3.3.42*
3.9.1.10*	3.3.147.1*
3.9.1.11*	3.3.64*
3.9.1.12	3.3.65
3.9.1.13	3.3.66
3.9.1.14	3.3.85
3.9.1.15	3.3.94
3.9.1.16	3.3.95
3.9.1.17*	3.3.118*
3.9.1.18*	3.3.123*
3.9.1.19*	3.3.142*
3.9.1.20	3.3.146
3.9.1.21	3.3.147.2
3.9.1.22*	3.3.147.3*
3.9.1.23	3.3.184

2016 Edition Section Numbers	2019 Edition Section Numbers
3.9.1.24	3.3.147.4
3.9.1.25	3.3.211
3.9.1.26	3.3.222
3.9.1.27	3.3.147.5
3.9.2	3.3.205.2*
3.9.2.1	3.3.8
3.9.2.1.1	3.3.8.1
3.9.2.1.2*	3.3.8.3*
3.9.2.2	3.3.18
3.9.2.3	3.3.148
3.9.2.4*	3.3.152*
3.9.2.5*	3.3.153*
3.9.2.6*	3.3.188*
3.9.2.6.1*	3.3.12*
3.9.2.7	3.3.201
3.9.2.8	3.3.200
3.9.3	3.3.205.3*
3.9.3.1*	3.3.4*
3.9.3.2	3.3.11
3.9.3.3	3.3.20
3.9.3.4*	3.3.71*
3.9.3.5	3.3.96
3.9.3.6*	3.3.116*
3.9.3.7*	3.3.171*
3.9.3.7.1	3.3.56
3.9.3.7.2	3.3.125
3.9.3.7.3	3.3.127
3.9.3.7.4	3.3.140
3.9.3.7.5	3.3.157
3.9.3.7.6	3.3.172
3.9.3.7.7*	3.3.191*
3.9.3.7.8	3.3.192
3.9.3.7.9	3.3.198
3.9.3.8*	3.3.199*
3.9.3.9	3.3.220
3.9.4	3.3.205.4*
3.9.4.1	3.3.15
3.9.4.2	3.3.98
3.9.4.3	3.3.111
3.9.4.4*	3.3.124*
3.9.4.5	3.3.136
3.9.4.6	3.3.137
3.9.4.7	3.3.149
3.9.4.8	3.3.167
3.9.4.9*	3.3.185*
3.9.4.10	3.3.186
3.9.5	3.3.182
3.9.5.1	3.3.205.5.1*
3.9.5.1.1	3.3.8.2
3.9.5.1.2	3.3.8.4
3.9.5.1.3*	3.3.8.5*
3.9.5.2	3.3.182.1
3.9.5.3	3.3.38
3.9.5.4	3.3.48

2016 Edition Section Numbers	2019 Edition Section Numbers
3.9.5.5	3.3.150
3.9.5.6	3.3.205.5.6*
3.9.5.6.1	3.3.182.2
3.9.5.6.2	3.3.182.4
3.9.5.6.3*	3.3.182.5*
3.9.5.7*	3.3.182.3*
3.9.6	3.3.205.6*
3.9.6.1*	3.3.13*
3.9.6.2*	3.3.219
3.10	3.3.119
3.10.1	3.3.119.1
3.10.2	3.3.119.2
3.10.3	3.3.119.3
3.10.4*	3.3.119.4
3.10.5	3.3.119.5
3.10.6	3.3.119.6
3.10.7*	3.3.119.7
3.10.8*	3.3.119.8
3.10.9*	3.3.119.9
3.10.10	3.3.119.10
3.10.11	3.3.119.11
3.10.12	3.3.119.12
3.10.13	3.3.119.13
3.11	3.3.205*
3.11.1	3.3.52
3.11.2	3.3.84
3.11.3*	3.3.83*
3.11.4	3.3.89
3.11.5	3.3.112
3.11.6	3.3.115
3.11.7	3.3.128
3.11.8*	3.3.158*
3.11.9*	3.3.164*
3.11.10	3.3.207
3.11.11*	3.3.187*
3.11.12	3.3.217
Chapter 4 General Requirements	**Chapter 4 General Requirements**
4.1	4.1.1
4.2	4.1.2
4.2.1	4.1.2.1
4.2.2	4.1.2.2
4.3*	4.2*
4.4	4.8
4.5	4.9
4.6*	4.10*
Chapter 5 Classification of Occupancies and Commodities	Various
5.1*	4.3
5.1.1	4.3.1.1
5.1.2	4.3.1.2

EDUFIRE.IR

2016 Edition Section Numbers	2019 Edition Section Numbers
5.2*	4.3.2
5.3*	Deleted
5.3.1*	4.3.3*
5.3.1.1	4.3.3.1
5.3.1.2	4.3.3.2
5.3.2*	4.3.4*
5.3.2.1	4.3.4.1
5.3.2.2	4.3.4.2
5.4	Deleted
5.4.1*	4.3.5*
5.4.2*	4.3.6*
5.5*	4.3.8*
5.6*	Deleted
5.6.1	Deleted
5.6.1.1	20.3
5.6.1.1.1	20.3.1
5.6.1.1.1.1	20.3.1.1
5.6.1.1.2	20.3.1.2
5.6.1.2	20.4.14
5.6.1.2.1	20.4.14.1
5.6.1.2.2	20.4.14.2
5.6.1.2.3	20.4.14.3
5.6.1.2.4	20.4.14.4
5.6.2	20.3.2
5.6.2.1	20.3.2.1
5.6.2.2*	20.3.2.2.1*
5.6.2.2.1	20.3.2.2.1.2
5.6.2.3*	20.3.2.2.2.1*
5.6.2.3.1	20.3.2.2.2.2
5.6.2.4	20.3.2.2.2.3
5.6.2.5	20.3.2.2.4
5.6.2.6	20.3.2.3
5.6.2.7	20.3.2.4
5.6.3*	20.4*
5.6.3.1*	20.4.1*
5.6.3.2*	20.4.2*
5.6.3.3*	20.4.3*
5.6.3.3.1	20.4.3.1
5.6.3.3.2*	20.4.3.2
5.6.3.3.3	20.4.3.3
5.6.3.4*	20.4.4
5.6.3.4.1	20.4.4.1
5.6.3.4.2	20.4.4.2
5.6.4*	20.4.5*
5.6.4.1*	20.4.5.1*
5.6.4.1.1*	20.4.5.2*
5.6.4.1.1.2	20.4.5.3
5.6.4.1.1.3	20.4.5.4
5.6.4.2	20.4.6
5.6.4.3	20.4.7
5.6.5*	20.4.10*
5.6.5.1	20.4.10.1
5.6.5.2	20.4.10.2
5.6.5.3	20.4.10.3

2016 Edition Section Numbers	2019 Edition Section Numbers
5.6.5.4	20.4.10.4
5.6.5.4.1	20.4.10.4.1
5.6.5.4.2	20.4.10.4.2
Chapter 6 System Components and Hardware	Various
6.1	7.1
6.1.1*	7.1.1*
6.1.1.1	7.1.1.1
6.1.1.1.1	7.1.1.1.1
6.1.1.2	7.1.1.2
6.1.1.2.1	7.1.1.2.1
6.1.1.3	7.1.1.3
6.1.1.3.1	7.1.1.3.1
6.1.1.4	7.1.1.4
6.1.1.5	7.1.1.5
6.1.1.6	16.1.2
6.1.2	16.1.3
6.1.2.1	16.1.3.1
6.1.2.2	16.1.3.2
6.1.3	7.1.2
6.2	7.2
6.2.1	16.2.1
6.2.1.1	16.2.1.1
6.2.1.1.1	16.2.1.1.1
6.2.2*	7.2.1*
6.2.3	7.2.2
6.2.3.1*	7.2.2.1*
6.2.3.2	7.2.2.2
6.2.3.3	7.2.2.3
6.2.3.4	7.2.2.4
6.2.3.5	7.2.2.5
6.2.3.6	7.2.2.6
6.2.4	7.2.3
6.2.4.1	7.2.3.1
6.2.4.2	7.2.3.2
6.2.5*	7.2.4*
6.2.5.1	7.2.4.1
6.2.5.2	7.2.4.2
6.2.5.3	7.2.4.3
6.2.5.4	7.2.4.4
6.2.5.5	7.2.4.5
6.2.6	7.2.5
6.2.6.1*	7.2.5.1*
6.2.6.1.1	16.2.2.1
6.2.6.1.2*	16.2.2.1.1*
6.2.6.1.3	16.2.2.1.2
6.2.6.2*	7.2.5.2*
6.2.6.2.1	Deleted
6.2.6.2.2	16.2.3.1
6.2.6.2.3	16.2.3.2
6.2.6.3	7.2.5.3
6.2.6.3.1	7.2.5.3.1
6.2.6.3.2	7.2.5.3.2

2016 Edition Section Numbers	2019 Edition Section Numbers
6.2.6.4	16.2.4
6.2.6.4.1	16.2.4.1
6.2.6.4.2	16.2.4.2*
6.2.6.4.3	16.2.4.3
6.2.7	7.2.6
6.2.7.1	7.2.6.1
6.2.7.2*	7.2.6.2*
6.2.7.3	7.2.6.3
6.2.7.4	16.2.5.4
6.2.8	16.2.6
6.2.9	16.2.7
6.2.9.1	16.2.7.1*
6.2.9.2	16.2.7.2
6.2.9.3	16.2.7.3
6.2.9.4	16.2.7.4
6.2.9.5	16.2.7.5
6.2.9.6	16.2.7.6*
6.2.9.7	16.2.7.7
6.2.9.7.1	16.2.7.7.1*
6.3	7.3
6.3.1	7.3.1
6.3.1.1	7.3.1.1
6.3.1.1.1*	Deleted
6.3.1.2	16.3.1.1
6.3.1.3	16.3.1.2
6.3.1.4	16.3.1.3
6.3.1.5	16.3.1.4
6.3.1.6	16.3.1.5
6.3.2	16.3.2*
6.3.3	16.3.3
6.3.4	16.3.4
6.3.5	16.3.5
6.3.6	16.3.6
6.3.7	16.3.7
6.3.8	16.3.8
6.3.8.1	16.3.8.1
6.3.8.2	16.3.8.2
6.3.8.3	16.3.8.3
6.3.8.4	16.3.8.4
6.3.9*	7.3.2
6.3.9.1	7.3.2.1
6.3.9.1.1	7.3.2.1.1
6.3.9.1.2	16.3.9.1
6.3.9.1.3	7.3.2.1.2
6.3.9.2	16.3.9.2
6.3.9.3	16.3.9.3
6.3.9.4	16.3.9.4*
6.3.9.5	16.3.9.5
6.3.9.6	16.3.9.6
6.3.9.6.1	16.3.9.6.1
6.3.9.7	7.3.2.1.3
6.3.9.8	16.3.9.7
6.3.10*	7.3.3
6.3.10.1	7.3.3.1

EDUFIRE.IR

2016 Edition Section Numbers	2019 Edition Section Numbers
6.3.10.2	16.3.10.1
6.3.10.2.1	16.3.10.1.1
6.3.10.3	7.3.3.2
6.3.10.4	16.3.10.2
6.3.11	7.3.4
6.3.11.1*	7.3.4.1*
6.3.11.2	7.3.4.2
6.3.11.3	7.3.4.3
6.4	7.4
6.4.1*	7.4.1
6.4.2	7.4.2
6.4.3	7.4.3
6.4.3.1*	16.8.2.1*
6.4.3.2*	16.8.2.2*
6.4.3.3	16.8.2.3
6.4.3.4*	16.8.2.4*
6.4.4*	7.4.4*
6.4.5*	16.8.3*
6.4.5.1	16.8.3.1
6.4.5.2	16.8.3.2
6.4.5.3	16.8.3.3
6.4.5.4	16.8.3.4
6.4.5.5	16.8.3.5
6.4.6*	16.8.4*
6.4.6.1	16.8.4.1
6.4.6.2	16.8.4.2
6.4.7	16.8.5
6.4.7.1	16.8.5.1
6.4.7.2	16.8.5.2
6.4.7.3	16.8.5.3
6.4.7.4	16.8.5.4
6.4.8	16.8.6
6.4.8.1	16.8.6.1
6.4.8.2	16.8.6.2
6.4.8.3	16.8.6.3
6.4.8.4	16.8.6.4
6.4.8.4.1	16.8.6.4.1
6.4.8.5	16.8.6.5
6.4.8.5.1	16.8.6.5.1
6.5	7.5
6.5.1	7.5.1
6.5.1.1	7.5.1.1
6.5.1.2*	7.5.1.2*
6.5.1.3	Deleted
6.5.2	7.5.2
6.5.2.1	7.5.2.1
6.5.2.1.1	7.5.2.1.1
6.5.2.2*	7.5.2.2*
6.5.2.2.1	7.5.2.2.1
6.5.2.2.2	7.5.2.2.2
6.5.2.2.3	7.5.2.2.3
6.5.2.2.4	7.5.2.2.4
6.5.2.2.5	7.5.2.2.5
6.5.2.3	7.5.2.3

2016 Edition Section Numbers	2019 Edition Section Numbers
6.5.2.3.1*	7.5.2.3.1*
6.5.2.3.2	7.5.2.3.2
6.5.2.3.3	7.5.2.3.3
6.5.2.3.4	7.5.2.3.4
6.5.2.4	7.5.2.4
6.5.2.4.1*	7.5.2.4.1*
6.5.2.4.2*	7.5.2.4.2*
6.5.2.4.3*	7.5.2.4.3*
6.5.2.4.4	7.5.2.4.4
6.5.2.4.5	7.5.2.4.5
6.5.2.4.6	7.5.2.4.6
6.5.2.4.7	7.5.2.4.7
6.5.2.4.8	7.5.2.4.8
6.5.2.5	7.5.2.5
6.5.2.5.1	7.5.2.5.1
6.5.2.5.2	7.5.2.5.2
6.5.2.5.3	7.5.2.5.3
6.5.2.5.4	7.5.2.5.4
6.5.2.5.5	7.5.2.5.5
6.5.2.5.6	7.5.2.5.6
6.5.2.6	7.5.2.6
6.5.2.6.1	7.5.2.6.1
6.5.2.6.2	7.5.2.6.2
6.5.2.6.3	7.5.2.6.3
6.5.3	7.5.3
6.5.3.1*	7.5.3.1*
6.5.3.1.1*	7.5.3.1.1*
6.5.3.1.2	7.5.3.1.2
6.5.3.2	7.5.3.2
6.5.4*	7.5.4*
6.5.4.1	7.5.4.1
6.5.4.2	7.5.4.2
6.5.4.3	7.5.4.3
6.5.4.4	7.5.4.4
6.5.4.5*	7.5.4.5*
6.5.4.6	7.5.4.6
6.5.5	7.5.5
6.5.5.1	7.5.5.1
6.5.5.2	7.5.5.2
6.5.6	7.5.6
6.5.6.1	7.5.6.1
6.5.6.2	7.5.6.2
6.6	7.6
6.6.1	Deleted
6.6.1.1	16.9.2
6.6.1.2	7.6.1
6.6.1.3	16.9.3.2
6.6.1.3.1	16.9.3.2.1
6.6.1.3.2	16.9.3.2.2
6.6.1.3.3	16.9.3.2.3
6.6.2	16.9.2
6.6.3	16.9.1.1
6.6.4	16.9.12*
6.6.4.1	16.9.12.1

2016 Edition Section Numbers	2019 Edition Section Numbers
6.6.4.2	16.9.12.2
6.6.4.3	16.9.12.3
6.6.4.3.1*	16.9.12.3.1*
6.7	16.12.3
6.7.1	16.12.3.1*
6.7.1.1	16.12.3.1.1
6.7.1.2	16.12.3.1.2
6.7.1.3	16.12.3.1.3
6.7.2	16.12.3.2
6.7.3	16.12.3.3
6.8	7.7
6.8.1	Deleted
6.8.2	16.11.3
6.8.2.1	16.11.3.1
6.8.2.2	16.11.3.2
6.8.2.2.1	16.11.3.2.1
6.8.2.2.2	16.11.3.2.2
6.8.2.3	16.11.3.3
6.8.2.3.1	16.11.3.3.1
6.8.2.4*	16.11.3.4*
6.8.3	16.11.1
6.8.3.1*	16.11.1.1*
6.8.3.2*	16.11.1.2*
6.8.3.3	16.11.1.3
6.8.3.4	16.11.1.4
6.8.4*	16.11.7*
6.8.4.1	16.11.7.1
6.8.4.2	16.11.7.2
6.8.4.3	16.11.7.3
6.8.5	16.11.9
6.9*	16.17
Chapter 7 System Requirements	**Chapter 8 System Types and Requirements**
7.1	8.1
7.1.1	8.1.1
7.1.1.1	8.1.1.1
7.1.1.2	8.1.1.2
7.1.1.2.1	8.1.1.2.1
7.1.2	8.1.2
7.1.2.1	8.1.2.1
7.1.2.2	8.1.2.2
7.1.2.3	8.1.2.3
7.1.3	8.1.3
7.1.4	8.1.4
7.1.5	8.1.5
7.1.5.1	8.1.5.1
7.2*	8.2*
7.2.1	8.2.1
7.2.2	8.2.2
7.2.3*	8.2.3*
7.2.3.1*	8.2.3.1*
7.2.3.1.1	8.2.3.1.1
7.2.3.1.1.1	8.2.3.1.1.1

EDUFIRE.IR

2016 Edition Section Numbers	2019 Edition Section Numbers
7.2.3.2	8.2.3.2
7.2.3.3	8.2.3.3
7.2.3.4	8.2.3.4
7.2.3.5	8.2.3.5
7.2.3.6	8.2.3.6
7.2.3.6.1	8.2.3.6.1
7.2.3.6.2	8.2.3.6.2
7.2.3.6.3	8.2.3.6.3
7.2.3.6.4	8.2.3.6.4
7.2.3.7*	8.2.3.7*
7.2.3.7.1	8.2.3.7.1
7.2.3.7.2	8.2.3.7.2
7.2.3.7.3	8.2.3.7.3
7.2.3.7.4	8.2.3.7.4
7.2.3.7.5	8.2.3.7.5
7.2.3.8	8.2.3.8
7.2.3.9	8.2.3.9
7.2.3.9.1	8.2.3.9.1
7.2.3.9.2	8.2.3.9.2
7.2.3.10	8.2.3.10
7.2.4	8.2.4
7.2.4.1	8.2.4.1
7.2.4.2	8.2.4.2
7.2.4.3	8.2.4.3
7.2.4.4	8.2.4.4
7.2.4.5	8.2.4.5
7.2.4.6	8.2.4.6
7.2.4.7	8.2.4.7
7.2.4.8	8.2.4.8
7.2.4.8.1	8.2.4.8.1
7.2.4.8.2	8.2.4.8.2
7.2.5*	8.2.5*
7.2.5.1*	8.2.5.1*
7.2.5.2	8.2.5.2
7.2.5.2.1	8.2.5.2.1
7.2.5.2.2	8.2.5.2.2
7.2.5.2.3	8.2.5.2.3
7.2.5.3	8.2.5.3
7.2.5.4	8.2.5.4
7.2.5.4.1	8.2.5.4.1
7.2.5.4.2	8.2.5.4.2
7.2.5.4.3	8.2.5.4.3
7.2.6	8.2.6
7.2.6.1	8.2.6.1
7.2.6.2	8.2.6.2
7.2.6.3*	8.2.6.3*
7.2.6.3.1	8.2.6.3.1
7.2.6.3.2*	8.2.6.3.2*
7.2.6.3.3	8.2.6.3.3
7.2.6.4	8.2.6.4
7.2.6.4.1	8.2.6.4.1*
7.2.6.4.2	8.2.6.4.2
7.2.6.5	8.2.6.5
7.2.6.6	8.2.6.6

2016 Edition Section Numbers	2019 Edition Section Numbers
7.2.6.6.1*	8.2.6.6.1*
7.2.6.6.2	8.2.6.6.2
7.2.6.6.3	8.2.6.6.3
7.2.6.6.3.1	8.2.6.6.3.1
7.2.6.6.4	8.2.6.6.4
7.2.6.7	8.2.6.7
7.2.6.7.1	8.2.6.7.1
7.2.6.7.2	8.2.6.7.2
7.2.6.8	8.2.6.8
7.2.6.8.1*	8.2.6.8.1*
7.2.6.8.2	8.2.6.8.2
7.2.6.8.3	8.2.6.8.3
7.3	8.3
7.3.1*	8.3.1*
7.3.1.1*	8.3.1.1*
7.3.1.2	8.3.1.2
7.3.1.3	8.3.1.3
7.3.1.4	8.3.1.4
7.3.1.5	8.3.1.5
7.3.1.6	8.3.1.6
7.3.1.6.1	8.3.1.6.1
7.3.1.6.2	8.3.1.6.2
7.3.1.6.3	8.3.1.6.3
7.3.1.7	8.3.1.7
7.3.1.7.1	8.3.1.7.1
7.3.1.7.2	8.3.1.7.2
7.3.1.7.3	8.3.1.7.3
7.3.1.7.4*	8.3.1.7.4*
7.3.1.8	8.3.1.8
7.3.1.8.1	8.3.1.8.1
7.3.1.8.2	8.3.1.8.2
7.3.1.8.2.1	8.3.1.8.2.1
7.3.1.8.2.2	8.3.1.8.2.2
7.3.1.8.2.3	8.3.1.8.2.3
7.3.2	8.3.2
7.3.2.1	8.3.2.1
7.3.2.2	8.3.2.2
7.3.2.3	8.3.2.3
7.3.2.3.1	8.3.2.3.1
7.3.2.3.1.1	8.3.2.3.1.1
7.3.2.3.1.2	8.3.2.3.1.2
7.3.2.3.1.3	8.3.2.3.1.3
7.3.2.3.1.4*	8.3.2.3.1.4*
7.3.2.3.2	8.3.2.3.2
7.3.2.4*	8.3.2.4*
7.3.2.4.1	8.3.2.4.1
7.3.2.4.2	8.3.2.4.2
7.3.2.4.3	8.3.2.4.3
7.3.2.4.4	8.3.2.4.4
7.3.2.5	8.3.2.5
7.3.2.6	8.3.2.6
7.3.3*	8.3.3*
7.3.3.1	8.3.3.1
7.3.3.2	8.3.3.2

2016 Edition Section Numbers	2019 Edition Section Numbers
7.4	8.4
7.4.1	8.4.1
7.4.2*	8.4.2*
7.4.2.1*	8.4.2.1*
7.4.2.2	8.4.2.2
7.4.2.3	8.4.2.3
7.4.2.4	8.4.2.4
7.4.3	8.4.3
7.4.3.1	8.4.3.1
7.4.3.2*	8.4.3.2*
7.4.3.3	8.4.3.3
7.4.3.4	8.4.3.4
7.4.3.5	8.4.3.5
7.4.3.6	8.4.3.6
7.4.3.7	8.4.3.7
7.4.3.8	8.4.3.8
7.4.4	8.4.4
7.4.4.1	8.4.4.1
7.4.4.2	8.4.4.2
7.4.4.3	8.4.4.3
7.4.4.4	8.4.4.4
7.4.5	8.4.5
7.4.5.1	8.4.5.1
7.4.5.2	8.4.5.2
7.4.6	8.4.6
7.5	8.5
7.5.1	8.5.1
7.5.2	8.5.2
7.6*	8.6*
7.6.1*	8.6.1*
7.6.1.1	8.6.1.1
7.6.1.2	8.6.1.2
7.6.1.3	8.6.1.3
7.6.1.3.1	8.6.1.3.1
7.6.1.4	8.6.1.4
7.6.1.5	8.6.1.5
7.6.2*	8.6.2*
7.6.2.1*	8.6.2.1*
7.6.2.2	8.6.2.2
7.6.3	8.6.3
7.6.3.1	8.6.3.1
7.6.3.2*	8.6.3.2*
7.6.3.2.1	8.6.3.2.1
7.6.3.3*	8.6.3.3*
7.6.3.3.1	8.6.3.3.1
7.6.3.3.2	8.6.3.3.2
7.6.3.4	8.6.3.4
7.6.3.5	8.6.3.5
7.6.3.6*	8.6.3.6*
7.6.3.7	8.6.3.7
7.7	8.7
7.7.1	8.7.1
7.7.1.1	8.7.1.1
7.7.1.2	8.7.1.2

EDUFIRE.IR

2016 Edition Section Numbers	2019 Edition Section Numbers
7.7.2	8.7.2
7.7.2.1	8.7.2.1
7.7.2.2	8.7.2.2
7.7.2.3	8.7.2.3
7.7.3	8.7.3
7.7.3.1	8.7.3.1
7.7.3.2	8.7.3.2
7.7.3.3	8.7.3.3
7.7.3.4	8.7.3.4
7.7.3.5	8.7.3.5
7.7.4	8.7.4
7.7.4.1	8.7.4.1
7.7.4.2	8.7.4.2
7.7.4.2.1*	8.7.4.2.1*
7.7.4.2.2	8.7.4.2.2
7.7.4.2.3*	8.7.4.2.3*
7.7.4.3	8.7.4.3
7.7.5	8.7.5
7.7.6	8.7.6
7.7.7	8.7.7
7.7.8	8.7.8
7.7.8.1	8.7.8.1
7.7.8.2	8.7.8.2
7.7.8.3	8.7.8.3
7.7.8.4	8.7.8.4
7.7.8.5	8.7.8.5
7.7.8.5.1	8.7.8.5.1
7.7.8.6	8.7.8.6
7.7.8.6.1	8.7.8.6.1
7.8*	8.8*
7.8.1	8.8.1
7.8.2*	8.8.2*
7.8.2.1	8.8.2.1
7.8.2.1.1	8.8.2.1.1*
7.8.2.1.2	8.8.2.1.2
7.8.2.2	8.8.2.2
7.8.2.2.1	8.8.2.2.1
7.8.2.2.2	8.8.2.2.2
7.8.2.3	8.8.2.3
7.8.2.4*	8.8.2.4*
7.8.2.5*	8.8.2.5*
7.8.2.6*	8.8.2.6*
7.8.2.6.1	8.8.2.6.1
7.8.2.6.2	8.8.2.6.2
7.8.2.7*	8.8.2.7
7.8.2.7.1	8.8.2.7.1*
7.8.2.7.1.1	8.8.2.7.1.1
7.8.2.7.1.2	8.8.2.7.1.2
7.8.2.7.2	8.8.2.7.2
7.8.2.7.3	8.8.2.7.3
7.8.2.8	8.8.2.8
7.8.2.8.1	8.8.2.8.1
7.8.2.8.1.1*	8.8.2.8.1.1*
7.8.2.8.1.2	8.8.2.8.1.2

2016 Edition Section Numbers	2019 Edition Section Numbers
7.8.2.8.2	8.8.2.8.2
7.8.2.8.2.1	8.8.2.8.2.1
7.8.2.8.2.2	8.8.2.8.2.2
7.8.2.8.3	8.8.2.8.3
7.8.2.8.3.1	8.8.2.8.3.1
7.8.2.8.3.2	8.8.2.8.3.2
7.8.2.8.4	8.8.2.8.4
7.9	8.9
7.9.1	8.9.1
7.9.2*	8.9.2*
7.9.2.1	8.9.2.1
7.9.2.3	8.9.2.2
7.9.2.4	8.9.2.3
7.9.2.5	8.9.2.4
7.9.3	8.9.3
7.9.3.1	8.9.3.1
7.9.3.2	8.9.3.2
7.9.3.3	8.9.3.3
7.9.3.4	8.9.3.4
7.9.3.4.1	8.9.3.4.1
7.9.3.5	8.9.3.5
7.9.4	8.9.4
7.9.4.1	8.9.4.1
7.9.4.2	8.9.4.2
7.9.5	8.9.5
7.9.5.1	8.9.5.1
7.9.5.2	8.9.5.2
7.9.6	8.9.6
7.9.6.1	8.9.6.1
7.9.6.2	8.9.6.2
7.9.6.3	8.9.6.3
7.9.7	8.9.7
7.9.8	8.9.8
7.9.8.1	8.9.8.1
7.9.8.2	8.9.8.2
7.9.8.2.1	8.9.8.2.1
7.9.8.2.2	8.9.8.2.2
7.9.8.3	8.9.8.3
7.9.8.3.1	8.9.8.3.1
7.9.8.3.2	8.9.8.3.2
7.9.8.3.3	8.9.8.3.3
7.9.9	8.9.9
7.9.10	8.9.10
7.9.11	8.9.11
7.10	7.8
7.10.1	7.8.1
7.10.2	7.8.2
Chapter 8 Installation Requirements	Various
8.1*	9.1*
8.1.1*	9.1.1*
8.1.2*	16.1.1*
8.2	4.5

2016 Edition Section Numbers	2019 Edition Section Numbers
8.2.1	4.5.1
8.2.2	4.5.2
8.2.3	4.5.3
8.2.4	16.9.11
8.2.4.1*	16.9.11.1
8.2.4.2	16.9.11.2
8.2.4.3	16.9.11.3
8.2.4.4	16.9.11.4
8.2.5	4.5.4.1
8.2.5.1	4.5.5
8.2.6*	4.5.6*
8.2.6.1	4.5.6.1
8.2.6.2	4.5.6.2
8.3	9.4
8.3.1	9.4.1
8.3.1.1*	9.4.1.1*
8.3.1.2	9.4.1.2
8.3.1.3*	9.4.1.3*
8.3.1.4	9.4.1.4
8.3.1.5	9.4.1.5
8.3.1.5.1*	9.4.1.5.1*
8.3.1.5.2*	9.4.1.5.2*
8.3.1.5.3	9.4.1.5.3
8.3.2	9.4.2
8.3.2.1*	9.4.2.1*
8.3.2.2	9.4.2.2
8.3.2.3	9.4.2.3
8.3.2.4	9.4.2.4
8.3.2.5*	9.4.2.5*
8.3.2.6	9.4.2.6
8.3.2.7*	9.4.2.7*
8.3.3	9.4.3
8.3.3.1*	9.4.3.1*
8.3.3.2	9.4.3.2
8.3.3.3	9.4.3.3
8.3.3.4	9.4.3.4
8.3.3.5	9.4.3.5
8.3.3.6	9.4.3.6
8.3.4	9.4.4
8.3.4.1	9.4.4.1
8.3.4.2	9.4.4.2
8.3.4.3	9.4.4.3
8.3.4.4	9.4.4.4
8.3.5	9.4.5
8.4*	Deleted
8.4.1	10.1
8.4.1.1	10.2.2
8.4.1.2	10.2.3
8.4.2	10.3.2
8.4.3	11.2.1
8.4.4	15.1
8.4.4.1	15.1.1
8.4.4.2	15.1.2
8.4.5	Deleted

EDUFIRE.IR

2016 Edition Section Numbers	2019 Edition Section Numbers
8.4.5.1*	12.1.1*
8.4.5.2	12.1.2
8.4.5.3	12.1.3
8.4.6	Deleted
8.4.6.1	14.2.2
8.4.6.2	14.2.3
8.4.6.3	14.2.4
8.4.6.3.1	14.2.4.1
8.4.6.3.2	14.2.4.2
8.4.6.4	14.2.5
8.4.6.4.1	14.2.5.1
8.4.6.4.2	14.2.5.2
8.4.6.5	14.2.6
8.4.6.6	14.2.7
8.4.7	Deleted
8.4.7.1	13.2.2
8.4.7.2	13.2.3
8.4.7.2.1	13.2.3.1
8.4.7.2.2	13.2.3.2
8.4.7.2.3	13.2.3.3
8.4.7.2.4	13.2.3.4
8.4.7.3	13.2.4
8.4.7.3.1	13.2.4.1
8.4.7.3.2	13.2.4.2
8.4.8	15.2
8.4.8.1*	15.2.1*
8.4.8.2	15.2.2
8.4.9	15.3
8.4.9.1*	15.3.1*
8.4.9.2	15.3.2
8.4.9.3*	15.3.3*
8.5	9.5
8.5.1	9.5.1
8.5.1.1	9.5.1.1
8.5.1.2	9.5.1.2
8.5.1.3	9.5.1.3
8.5.2	9.5.2
8.5.2.1	9.5.2.1
8.5.2.1.1	9.5.2.1.1
8.5.2.1.2	9.5.2.1.2
8.5.2.2	9.5.2.2
8.5.2.2.1	9.5.2.2.1
8.5.2.2.2	9.5.2.2.2
8.5.3	9.5.3
8.5.3.1	9.5.3.1
8.5.3.1.1	9.5.3.1.1
8.5.3.1.2	9.5.3.1.2
8.5.3.1.3	9.5.3.1.3
8.5.3.2	9.5.3.2
8.5.3.2.1	9.5.3.2.1
8.5.3.2.3	9.5.3.2.2
8.5.3.2.4	9.5.3.2.3
8.5.3.3	9.5.3.3
8.5.3.3.1	9.5.3.3.1

2016 Edition Section Numbers	2019 Edition Section Numbers
8.5.3.3.2	9.5.3.3.2
8.5.3.4	9.5.3.4
8.5.3.4.1	9.5.3.4.1
8.5.3.4.2	9.5.3.4.2
8.5.4	9.5.4
8.5.4.1*	9.5.4.1*
8.5.4.1.1	9.5.4.1.1
8.5.4.1.2	9.5.4.1.2
8.5.4.1.2.1	9.5.4.1.2.1
8.5.4.1.2.2	9.5.4.1.2.2
8.5.4.1.3	9.5.4.1.3
None	9.5.4.1.3.1
8.5.4.1.3.1	9.5.4.1.3.2
8.5.4.1.3.2	9.5.4.1.3.3
8.5.4.1.4*	9.5.4.1.4*
8.5.4.2	9.5.4.2
8.5.5	9.5.5
8.5.5.1*	9.5.5.1*
8.5.5.2*	9.5.5.2*
8.5.5.2.1	9.5.5.2.1
8.5.5.2.2	9.5.5.2.2
8.5.5.3*	9.5.5.3*
8.5.5.3.1*	9.5.5.3.1*
8.5.5.3.1.1	9.5.5.3.1.1*
8.5.5.3.1.2	9.5.5.3.1.2*
8.5.5.3.1.3	9.5.5.3.1.3
8.5.5.3.1.4	9.5.5.3.1.4
8.5.5.3.2	9.5.5.3.2*
8.5.5.3.3	9.5.5.3.3
8.5.5.3.3.1	9.5.5.3.3.1
8.5.5.3.4*	9.5.5.3.4*
8.5.5.4	9.5.5.4
8.5.6	9.5.6
8.5.6.1*	9.5.6.1*
8.5.6.2	9.5.6.2
8.5.6.3	9.5.6.3
8.5.6.4	9.5.6.4
8.5.6.5	9.5.6.5
8.5.7	9.3.17
8.5.7.1	9.3.17.1
8.5.7.1.1	9.3.17.1.1
8.5.7.2	9.3.17.2
8.6	10.2
8.6.1	10.2.1
8.6.2	10.2.4
8.6.2.1	10.2.4.1
8.6.2.1.1	10.2.4.1.1
8.6.2.1.2	10.2.4.1.2
8.6.2.1.2.1	10.2.4.1.2.1
8.6.2.2	10.2.4.2
8.6.2.2.1*	10.2.4.2.1*
8.6.2.2.2	10.2.4.2.2
8.6.3	10.2.5
8.6.3.1	10.2.5.1

2016 Edition Section Numbers	2019 Edition Section Numbers
8.6.3.2	10.2.5.2
8.6.3.2.1	10.2.5.2.1
8.6.3.2.3*	10.2.5.2.2*
8.6.3.2.4*	10.2.5.2.3*
8.6.3.2.4.1	10.2.5.2.3.1
8.6.3.2.4.2	10.2.5.2.3.2
8.6.3.2.5	10.2.5.2.4
8.6.3.3	10.2.5.3
8.6.3.4	10.2.5.4
8.6.3.4.1	10.2.5.4.1
8.6.3.4.2	10.2.5.4.2
8.6.3.4.3	10.2.5.4.3
8.6.4	10.2.6
8.6.4.1	10.2.6.1
8.6.4.1.1	10.2.6.1.1
8.6.4.1.1.1	10.2.6.1.1.1
8.6.4.1.1.2	10.2.6.1.1.2
8.6.4.1.1.3	10.2.6.1.1.3
8.6.4.1.2	10.2.6.1.2
8.6.4.1.3	10.2.6.1.3
8.6.4.1.3.1	10.2.6.1.3.1
8.6.4.1.3.2*	10.2.6.1.3.2*
8.6.4.1.3.3*	10.2.6.1.3.3*
8.6.4.1.4	10.2.6.1.4
8.6.4.1.4.1	10.2.6.1.4.1
8.6.4.1.4.2	10.2.6.1.4.2
8.6.4.1.4.3*	10.2.6.1.4.3*
8.6.4.1.4.4	10.2.6.1.4.4*
8.6.4.1.4.5*	10.2.6.1.4.5*
8.6.4.1.4.6	10.2.6.1.4.6
8.6.4.1.5	10.2.6.1.5
8.6.4.1.5.1	10.2.6.1.5.1
8.6.4.1.5.2	10.2.6.1.5.2
8.6.4.2	10.2.6.2
8.6.4.2.1	10.2.6.2.1
8.6.4.2.2	10.2.6.2.2
8.6.4.2.3	10.2.6.2.3
8.6.5	10.2.7
8.6.5.1	10.2.7.1
8.6.5.1.1	10.2.7.1.1
8.6.5.1.2*	10.2.7.1.2*
8.6.5.2	10.2.7.2
8.6.5.2.1	10.2.7.2.1
8.6.5.2.1.1	10.2.7.2.1.1
8.6.5.2.1.2	10.2.7.2.1.2
8.6.5.2.1.3*	10.2.7.2.1.3*
8.6.5.2.1.4*	10.2.7.2.1.4*
8.6.5.2.1.5	10.2.7.2.1.5
8.6.5.2.1.6	10.2.7.2.1.6
8.6.5.2.1.7	10.2.7.2.1.7
8.6.5.2.1.8	10.2.7.2.1.8
8.6.5.2.1.9	10.2.7.2.1.9
8.6.5.2.1.10*	10.2.7.2.1.10*
8.6.5.2.2	10.2.7.2.2

EDUFIRE.IR

2016 Edition Section Numbers	2019 Edition Section Numbers
8.6.5.2.2.1*	10.2.7.2.2.1*
8.6.5.3*	10.2.7.3*
8.6.5.3.1	10.2.7.3.1
8.6.5.3.2	10.2.7.3.2*
8.6.5.3.3*	10.2.7.3.3
8.6.5.3.5	10.2.7.3.4
8.6.5.3.6	10.2.7.3.5
8.6.6	10.2.8
8.6.6.1	10.2.8.1
8.6.6.2	10.2.8.2
8.6.6.2.1	10.2.8.2.1
8.6.6.2.2	10.2.8.2.2
8.6.7	10.2.9
8.6.7.1*	10.2.9.1*
8.6.7.2	10.2.9.2
8.6.7.3	10.2.9.3
8.7	10.3
8.7.1	10.3.1
8.7.2	10.3.3
8.7.2.1	10.3.3.1
8.7.2.1.1	10.3.3.1.1
8.7.2.1.2	10.3.3.1.2
8.7.2.2	10.3.3.2
8.7.2.2.1	10.3.3.2.1
8.7.2.2.2	10.3.3.2.2
8.7.3	10.3.4
8.7.3.1	10.3.4.1
8.7.3.1.1	10.3.4.1.1
8.7.3.1.2	10.3.4.1.2
8.7.3.1.3	10.3.4.1.3
8.7.3.1.4	10.3.4.1.4
8.7.3.1.4.1	10.3.4.1.4.1
8.7.3.1.4.2	10.3.4.1.4.2
8.7.3.1.5	10.3.4.1.5
8.7.3.1.6	10.3.4.1.6
8.7.3.1.7	10.3.4.1.7
8.7.3.2	10.3.4.2
8.7.3.3	10.3.4.3
8.7.3.3.1	10.3.4.3.1
8.7.3.4	10.3.4.4
8.7.4	10.3.5
8.7.4.1	10.3.5.1
8.7.4.1.1	10.3.5.1.1
8.7.4.1.1.1	10.3.5.1.1.1
8.7.4.1.1.2	10.3.5.1.1.2
8.7.4.1.2	10.3.5.1.2
8.7.4.1.2.1*	10.3.5.1.2.1*
8.7.4.1.2.2	10.3.5.1.2.2
8.7.4.1.3	10.3.5.1.3
8.7.4.1.3.1	10.3.5.1.3.1
8.7.4.1.3.2*	10.3.5.1.3.2*
8.7.4.1.3.3*	10.3.5.1.3.3*
8.7.4.1.4*	10.3.5.1.4*
8.7.4.1.4.1	10.3.5.1.4.1

2016 Edition Section Numbers	2019 Edition Section Numbers
8.7.4.1.4.2	10.3.5.1.4.2
8.7.4.1.4.3	10.3.5.1.4.3
8.7.4.2	10.3.5.2
8.7.4.2.2	10.3.5.2.1
8.7.5	10.3.6
8.7.5.1	10.3.6.1
8.7.5.1.1	10.3.6.1.1
8.7.5.1.2	10.3.6.1.2
8.7.5.1.3	10.3.6.1.3
8.7.5.1.4	10.3.6.1.4
8.7.5.1.4.1	10.3.6.1.4.1
8.7.5.1.5	10.3.6.1.5
8.7.5.1.6*	10.3.6.1.6*
8.7.5.2	10.3.6.2
8.7.5.2.1	10.3.6.2.1
8.7.5.2.1.1	10.3.6.2.1.1
8.7.5.2.1.2	10.3.6.2.1.2
8.7.5.2.1.3*	10.3.6.2.1.3
8.7.5.2.1.4	10.3.6.2.1.4
8.7.5.2.1.5	10.3.6.2.1.5
8.7.5.2.1.6*	10.3.6.2.1.6*
8.7.5.2.2	10.3.6.2.2
8.7.5.2.2.1*	10.3.6.2.2.1*
8.7.5.3*	10.3.6.3*
8.7.5.3.1	10.3.6.3.1
8.7.5.3.2	10.3.6.3.2
8.7.6*	10.3.7*
8.8	11.2
8.8.1	11.2.1
8.8.2	11.2.2
8.8.2.1*	11.2.2.1*
8.8.2.1.1	11.2.2.1.1
8.8.2.1.2	11.2.2.1.2
8.8.2.1.3	11.2.2.1.3
8.8.2.2	11.2.2.2
8.8.2.2.1*	11.2.2.2.1*
8.8.2.2.2	11.2.2.2.2
8.8.3	11.2.3
8.8.3.1	11.2.3.1
8.8.3.1.1	11.2.3.1.1
8.8.3.1.2	11.2.3.1.2
8.8.3.1.3	11.2.3.1.3
8.8.3.2	11.2.3.2
8.8.3.2.1	11.2.3.2.1
8.8.3.2.2	11.2.3.2.2
8.8.3.2.3	11.2.3.2.3
8.8.3.3	11.2.3.3
8.8.3.4	11.2.3.4
8.8.3.4.1	11.2.3.4.1
8.8.3.4.2	11.2.3.4.2
8.8.4	11.2.4
8.8.4.1	11.2.4.1
8.8.4.1.1	11.2.4.1.1
8.8.4.1.1.1	11.2.4.1.1.1

2016 Edition Section Numbers	2019 Edition Section Numbers
8.8.4.1.1.2	11.2.4.1.1.2
8.8.4.1.1.3	11.2.4.1.1.3
8.8.4.1.1.4	11.2.4.1.1.4
8.8.4.1.2	11.2.4.1.2
8.8.4.1.3*	11.2.4.1.3*
8.8.4.2	11.2.4.2
8.8.4.2.1	11.2.4.2.1
8.8.5	11.2.5
8.8.5.1	11.2.5.1
8.8.5.1.1	11.2.5.1.1
8.8.5.1.2*	11.2.5.1.2*
8.8.5.2	11.2.5.2
8.8.5.2.1	11.2.5.2.1
8.8.5.2.1.1	11.2.5.2.1.1
8.8.5.2.1.2	11.2.5.2.1.2
8.8.5.2.1.3*	11.2.5.2.1.3*
8.8.5.2.1.4	11.2.5.2.1.4
8.8.5.2.1.5	11.2.5.2.1.5
8.8.5.2.1.6	11.2.5.2.1.6
8.8.5.2.1.7	11.2.5.2.1.7
8.8.5.2.1.8	11.2.5.2.1.8
8.8.5.2.1.9*	11.2.5.2.1.9*
8.8.5.2.2	11.2.5.2.2
8.8.5.2.2.1	11.2.5.2.2.1
8.8.5.3*	11.2.5.3*
8.8.5.3.1	11.2.5.3.1
8.8.5.3.2	11.2.5.3.2*
8.8.5.3.3	11.2.5.3.3
8.8.5.3.4	11.2.5.3.4
8.8.5.3.6	11.2.5.3.5
8.8.6*	11.2.6*
8.8.6.1	11.2.6.1
8.8.6.2	11.2.6.2
8.8.7	11.2.8
8.8.7.1*	11.2.8.1
8.8.7.2	11.2.8.2
8.8.7.3	11.2.8.3
8.9*	11.3*
8.9.1	11.3.1
None	11.3.2
8.9.2	11.3.3
8.9.2.1*	11.3.3.1*
8.9.2.1.1	11.3.3.1.1
8.9.2.1.2	11.3.3.1.2
8.9.2.2	11.3.3.2
8.9.2.2.1	11.3.3.2.1
8.9.2.2.2	11.3.3.2.2
8.9.3	11.3.4
8.9.3.1	11.3.4.1
8.9.3.1.1	11.3.4.1.1
8.9.3.1.2	11.3.4.1.2
8.9.3.1.3	11.3.4.1.3
8.9.3.1.4	11.3.4.1.4
8.9.3.2	11.3.4.2

EDUFIRE.IR

2016 Edition Section Numbers	2019 Edition Section Numbers
8.9.3.3	11.3.4.3
8.9.3.3.1	11.3.4.3.1
8.9.3.3.2	11.3.4.3.2
8.9.3.4	11.3.4.4
8.9.4	11.3.5
8.9.4.1	11.3.5.1
8.9.4.1.1	11.3.5.1.1
8.9.4.1.1.1	11.3.5.1.1.1
8.9.4.1.1.2	11.3.5.1.1.2
8.9.4.1.2	11.3.5.1.2
8.9.4.1.2.1*	11.3.5.1.2.1*
8.9.4.1.2.2	11.3.5.1.2.2
8.9.4.1.3	11.3.5.1.3
8.9.4.1.3.1*	11.3.5.1.3.1*
8.9.4.1.3.2*	11.3.5.1.3.2*
8.9.4.1.4*	11.3.5.1.4*
8.9.4.1.4.1	11.3.5.1.4.1
8.9.4.1.4.2	11.3.5.1.4.2
8.9.4.1.4.3	11.3.5.1.4.3
8.9.4.2	11.3.5.2
8.9.4.2.2	11.3.5.2.1
8.9.4.2.3	11.3.5.2.2
8.9.5	11.3.6
8.9.5.1	11.3.6.1
8.9.5.1.1	11.3.6.1.1
8.9.5.1.2	11.3.6.1.2
8.9.5.1.3	11.3.6.1.3
8.9.5.1.4	11.3.6.1.4
8.9.5.1.5	11.3.6.1.5
8.9.5.1.6*	11.3.6.1.6*
8.9.5.2	11.3.6.2
8.9.5.2.1	11.3.6.2.1
8.9.5.2.1.1	11.3.6.2.1.1
8.9.5.2.1.2	11.3.6.2.1.2
8.9.5.2.1.3*	11.3.6.2.1.3*
8.9.5.2.1.4	11.3.6.2.1.4
8.9.5.2.1.5	11.3.6.2.1.5
8.9.5.2.1.6*	11.3.6.2.1.6*
8.9.5.2.2	11.3.6.2.2
8.9.5.2.2.1*	11.3.6.2.2.1*
8.9.5.3*	11.3.6.3*
8.9.5.3.1	11.3.6.3.1
8.9.5.3.2	11.3.6.3.2*
8.9.5.3.3	11.3.6.3.3
8.10	Deleted
8.10.1	12.1.5
8.10.2*	12.1.6*
8.10.2.1	12.1.6.1
8.10.2.2	12.1.6.2
8.10.3	12.1.7
8.10.3.1	12.1.7.1
8.10.3.2	12.1.7.2
8.10.3.3	12.1.7.3
8.10.3.4	12.1.7.4

2016 Edition Section Numbers	2019 Edition Section Numbers
8.10.3.5	12.1.7.5
8.10.3.6	12.1.7.6
8.10.4	12.1.8
8.10.4.1	12.1.8.1
8.10.4.2	12.1.8.2
8.10.4.3	12.1.8.3
8.10.4.4	12.1.8.4
8.10.4.5	12.1.8.5
8.10.4.6	12.1.8.6
8.10.4.6.1	12.1.8.6.1
8.10.4.7	12.1.8.7
8.10.4.7.1	12.1.8.7.1
8.10.4.7.2	12.1.8.7.2
8.10.4.7.3	12.1.8.7.3
8.10.5	12.1.9
8.10.6	12.1.10
8.10.6.1	12.1.10.1
8.10.6.1.1	12.1.10.1.1
8.10.6.1.2	12.1.10.1.2
8.10.6.2	12.1.10.2
8.10.6.2.1	12.1.10.2.1
8.10.6.2.1.1	12.1.10.2.1.1
8.10.6.2.1.2	12.1.10.2.1.2
8.10.6.2.1.3*	12.1.10.2.1.3*
8.10.6.2.1.4	12.1.10.2.1.4
8.10.6.2.1.5	12.1.10.2.1.5
8.10.6.2.1.6	12.1.10.2.1.6
8.10.6.2.1.7	12.1.10.2.1.7
8.10.6.2.1.8	12.1.10.2.1.8
8.10.6.2.1.9*	12.1.10.2.1.9*
8.10.6.2.2	12.1.10.2.2
8.10.6.3*	12.1.10.3*
8.10.6.3.1	12.1.10.3.1
8.10.6.3.2	12.1.10.3.2
8.10.6.3.4	12.1.10.3.3
8.10.7	12.1.11
8.10.7.1	12.1.11.1
8.10.7.1.1	12.1.11.1.1
8.10.7.1.2	12.1.11.1.2
8.10.7.1.3	12.1.11.1.3
8.10.7.1.4	12.1.11.1.4
8.10.7.1.5*	12.1.11.1.5*
8.10.7.1.5.1	12.1.11.1.5.1
8.10.7.1.5.2	12.1.11.1.5.2
8.10.7.1.5.3	12.1.11.1.5.3
8.10.7.1.6*	12.1.11.1.6*
8.10.7.2	12.1.11.2
8.10.7.2.1	12.1.11.2.1
8.10.7.2.1.1	12.1.11.2.1.1
8.10.7.2.1.2	12.1.11.2.1.2
8.10.7.2.1.3*	12.1.11.2.1.3*
8.10.7.2.1.4	12.1.11.2.1.4
8.10.7.2.1.5	12.1.11.2.1.5
8.10.7.2.1.6	12.1.11.2.1.6

2016 Edition Section Numbers	2019 Edition Section Numbers
8.10.7.2.1.7*	12.1.11.2.1.7*
8.10.7.2.2	12.1.11.2.2*
8.10.7.3*	12.1.11.3*
8.10.7.3.1	12.1.11.3.1
8.10.7.3.2	12.1.11.3.2*
8.10.7.3.4	12.1.11.3.3
8.10.7.3.5	12.1.11.3.4
8.10.7.3.6	12.1.11.3.5
8.10.8	12.1.12
8.10.8.1	12.1.12.1
8.10.8.2	12.1.12.2
8.11	13.2
8.11.1	13.2.1
8.11.1.1	13.2.1.1
8.11.2*	13.2.5*
8.11.2.1	13.2.5.1
8.11.2.2	13.2.5.2
8.11.2.2.1	13.2.5.2.1
8.11.2.2.2	13.2.5.2.2
8.11.2.3	13.2.5.3
8.11.3	13.2.6
8.11.3.1*	13.2.6.1*
8.11.3.1.1	13.2.6.1.1
8.11.3.1.2	13.2.6.1.2
8.11.3.2	13.2.6.2
8.11.3.3	13.2.6.3
8.11.3.4	13.2.6.4
8.11.4	13.2.7
8.11.4.1*	13.2.7.1*
8.11.4.1.1	13.2.7.1.1
8.11.4.1.2	13.2.7.1.2
8.11.5*	13.2.8*
8.11.5.1	13.2.8.1
8.11.5.1.1	13.2.8.1.1
8.11.5.1.2	13.2.8.1.2
8.11.5.1.3	13.2.8.1.3
8.11.5.2	13.2.8.2
8.11.5.2.1	13.2.8.2.1
8.11.5.2.1.1	13.2.8.2.1.1
8.11.5.2.1.2	13.2.8.2.1.2
8.11.5.2.1.3*	13.2.8.2.1.3*
8.11.5.2.2	13.2.8.2.2
8.11.5.3*	13.2.8.3*
8.11.5.3.1	13.2.8.3.1
8.11.5.3.2	13.2.8.3.2
8.11.5.3.3	13.2.8.3.3
8.11.5.3.4	13.2.8.3.4
8.11.5.3.5	13.2.8.3.5
8.11.6	13.2.9
8.12	14.2
8.12.1	14.2.1
8.12.2	14.2.8
8.12.2.1	14.2.8.1
8.12.2.2	14.2.8.2

EDUFIRE.IR

2016 Edition Section Numbers	2019 Edition Section Numbers
8.12.2.2.1	14.2.8.2.1
8.12.2.2.2	14.2.8.2.2
8.12.2.2.3*	14.2.8.2.3*
8.12.2.2.4	14.2.8.2.4
8.12.2.3	14.2.8.3
8.12.3	14.2.9
8.12.3.1	14.2.9.1
8.12.3.2	14.2.9.2
8.12.3.3	14.2.9.3
8.12.3.4	14.2.9.4
8.12.4	14.2.10
8.12.4.1	14.2.10.1
8.12.4.1.1	14.2.10.1.1
8.12.4.1.2	14.2.10.1.2
8.12.4.1.3	14.2.10.1.3
8.12.4.1.4	14.2.10.1.4
8.12.4.1.5	14.2.10.1.5
8.12.4.1.6	14.2.10.1.6
8.12.4.2	14.2.10.2
8.12.5*	14.2.11*
8.12.5.1	14.2.11.1
8.12.5.1.1	14.2.11.1.1
8.12.5.1.2	14.2.11.1.2
8.12.5.1.3	14.2.11.1.3
8.12.5.2*	14.2.11.2*
8.12.5.3	14.2.11.3
8.12.5.3.1	14.2.11.3.1
8.12.5.3.2	14.2.11.3.2
8.12.5.3.2.1	14.2.11.3.2.1
8.12.5.3.3*	14.2.11.3.3*
8.12.5.3.4	14.2.11.3.4
8.12.5.3.5	14.2.11.3.5
8.12.5.3.6	14.2.11.3.6
8.12.6	14.2.12
8.13	Deleted
8.13.1	25.1.3.1
8.13.2	Deleted
8.13.2.1	25.3.2
8.13.2.2	25.3.3
8.13.3	25.3.5
8.13.3.1	25.3.5.1
8.13.3.2	25.3.5.2
8.13.4	Deleted
8.13.4.1	Deleted
8.13.5	25.3
8.14	8.10
8.14.1	8.10.1
8.14.2	8.10.2
8.14.3	8.10.3
8.14.3.1	8.10.3.1
8.14.4	8.10.4
8.14.5	8.10.5
8.14.6	8.10.6
8.14.6.1	8.10.6.1

2016 Edition Section Numbers	2019 Edition Section Numbers
8.14.7	8.10.7
8.14.8	8.10.8
8.14.8.1	8.10.8.1
8.14.8.2	8.10.8.2
8.14.9	8.10.9
8.14.9.1	8.10.9.1
8.14.9.2	8.10.9.2
8.14.9.3	8.10.9.3
8.14.9.4	8.10.9.4
8.14.10	8.10.10
8.14.10.1	8.10.10.1
8.15	9.3
8.15.1	9.3.18
8.15.1.1	9.3.18.1
8.15.1.2*	9.2.1*
8.15.1.2.1*	9.2.1.1*
8.15.1.2.1.1	9.2.1.1.1
8.15.1.2.1.2	9.2.1.1.2
8.15.1.2.1.3	9.2.1.1.3
8.15.1.2.2	9.2.1.2
8.15.1.2.2.1	9.2.1.2.1
8.15.1.2.3	9.2.1.3
8.15.1.2.4	9.2.1.4
8.15.1.2.5	9.2.1.5*
8.15.1.2.6*	9.2.1.6*
8.15.1.2.7	9.2.1.7
8.15.1.2.7.1	9.2.1.7.1
8.15.1.2.8	9.2.1.8
8.15.1.2.9	9.2.1.10
8.15.1.2.10	9.2.1.11
8.15.1.2.11	9.2.1.12
8.15.1.2.12	9.2.1.13
8.15.1.2.13	9.2.1.14
8.15.1.2.14	9.2.1.15
8.15.1.2.15	9.2.1.16
8.15.1.2.16*	9.2.1.17*
8.15.1.2.17*	9.2.1.18*
8.15.1.2.17.1	9.2.1.18.1
8.15.1.2.18	9.2.1.19
8.15.1.2.18.1	9.2.1.19.1
8.15.1.2.18.2	9.2.1.19.2
8.15.1.2.18.3	9.2.1.19.3
8.15.1.2.18.4	9.2.1.19.4
8.15.1.2.18.5	9.2.1.19.5
8.15.1.3	9.3.18.1.1
8.15.1.4	9.3.1
8.15.1.5	9.3.18.1.2
8.15.1.6	9.3.2
8.15.1.6.1	9.3.2.1
8.15.1.6.2	9.3.2.2
8.15.1.7	9.3.2.3
8.15.2	9.3.3
8.15.2.1	9.3.3.1
8.15.2.1.1	9.3.3.1.1

2016 Edition Section Numbers	2019 Edition Section Numbers
8.15.2.1.2	9.3.3.1.2
8.15.2.2*	9.3.3.2*
8.15.2.2.1	9.3.3.2.1
8.15.2.2.2	9.3.3.2.2
8.15.2.3	9.3.3.3
8.15.3	9.3.4
8.15.3.1	9.3.4.1
8.15.3.1.1	9.3.4.1.1
8.15.3.1.2*	9.3.4.1.2*
8.15.3.1.3	9.3.4.1.3
8.15.3.2	9.3.4.2
8.15.3.2.1	9.3.4.2.1
8.15.3.2.2	9.3.4.2.2
8.15.3.2.3	9.3.4.2.3
8.15.3.2.3.1	9.3.4.2.3.1
8.15.3.2.4	9.3.4.2.4
8.15.3.3*	9.3.4.3*
8.15.4*	9.3.5*
8.15.4.1*	9.3.5.1*
8.15.4.2	9.3.5.2
8.15.4.3	9.3.5.3
8.15.4.3.1	9.3.5.3.1
8.15.4.3.2	9.3.5.3.2
8.15.4.4	9.3.5.4
8.15.5	9.3.6
8.15.5.1*	9.3.6.1*
8.15.5.2	9.3.6.2
8.15.5.3	9.3.6.3
8.15.5.4*	9.3.6.4*
8.15.5.5*	9.3.6.5*
8.15.5.6	9.3.6.6
8.15.5.7	9.3.6.7
8.15.5.7.1	9.3.6.7.1
8.15.5.7.2	9.3.6.7.2
8.15.6	9.3.19
8.15.6.1	9.3.19.1
8.15.7*	9.3.20
8.15.7.1	9.3.20.1*
8.15.7.2*	9.2.3.2*
8.15.7.3	9.2.3.3
8.15.7.4	9.2.3.4
8.15.7.5*	9.3.20.2*
8.15.8	9.2.4
8.15.8.1	9.2.4.1
8.15.8.1.1*	9.2.4.1.1*
8.15.8.1.2	9.2.4.1.2
8.15.8.1.3	9.2.4.1.3
8.15.8.2*	9.2.4.2*
8.15.9*	9.2.5*
8.15.10*	9.3.7*
8.15.11*	9.3.21
8.15.11.1	9.3.21.1*
8.15.11.2	9.2.6*
8.15.12*	9.3.8*

EDUFIRE.IR

2016 Edition Section Numbers	2019 Edition Section Numbers
8.15.13	9.3.9
8.15.13.1	9.3.9.1
8.15.13.1.1	9.3.9.1.1
8.15.13.1.2	9.3.9.1.2
8.15.13.1.3	9.3.9.1.3
8.15.13.2	9.3.9.2
8.15.13.3	9.3.9.3
8.15.13.4	9.3.9.4
8.15.14*	9.3.10*
8.15.15	9.3.11
8.15.15.1*	9.3.11.1*
8.15.15.2	9.3.11.2
8.15.15.3	9.3.11.3
8.15.15.4*	9.3.11.4*
8.15.15.5*	9.3.11.5*
8.15.16.2*	9.3.12*
8.15.17	9.3.13
8.15.17.1	9.3.13.1
8.15.17.2	9.3.13.2
8.15.18	19.3.3.4.4
8.15.19	16.3.11
8.15.19.1	16.3.11.1
8.15.19.2	16.3.11.2
8.15.19.3	16.3.11.3
8.15.19.4	16.3.11.4
8.15.19.5	16.3.11.5
8.15.20	16.3.12
8.15.20.1*	16.3.12.1*
8.15.20.2*	16.3.12.2*
8.15.20.3*	Deleted
8.15.20.4	29.4
8.15.20.4.1	29.4.1
8.15.20.4.2	29.4.2
8.15.20.4.3	29.4.3
8.15.20.4.4	29.4.4
8.15.20.5	29.5
8.15.20.5.1	29.5.1
8.15.20.5.2	29.5.2
8.15.20.5.3	29.5.3
8.15.20.5.4	29.5.4
8.15.21	6.1.1.4
8.15.21.1	6.1.1.4.1
8.15.21.2	6.1.1.4.2
8.15.22*	16.9.11.5*
8.15.23	9.3.14
8.15.23.1	9.3.14.1
8.15.23.2	9.3.14.2
8.15.23.3*	9.3.14.3*
8.15.23.3.1	9.3.14.3.1
8.15.24	9.2.7
8.15.24.1*	9.2.7.1*
8.15.24.2	9.2.7.2
8.15.24.2.1	9.2.7.2.1
8.15.24.2.1.1	9.2.7.2.3.1

2016 Edition Section Numbers	2019 Edition Section Numbers
8.15.24.2.2	9.2.7.2.2
8.15.24.2.3	9.2.7.2.3
8.15.24.2.4	9.2.7.2.4
8.15.24.2.5*	9.2.7.2.5*
8.15.25	9.2.8
8.15.26*	9.3.15*
8.16	16.3
8.16.1	16.9
8.16.1.1*	16.9.3*
8.16.1.1.1*	16.9.3.1*
8.16.1.1.1.1	16.9.3.1.1
8.16.1.1.1.2	16.9.3.1.2
8.16.1.1.1.3	16.9.3.1.3
8.16.1.1.2*	16.9.3.3*
8.16.1.1.2.1	16.9.3.3.1
8.16.1.1.2.2	16.9.3.3.2
8.16.1.1.2.3	16.9.3.3.3
8.16.1.1.2.4	16.9.3.3.4
8.16.1.1.2.5	16.9.3.3.5
8.16.1.1.3*	16.9.5*
8.16.1.1.3.1	16.9.5.1
8.16.1.1.3.2	16.9.5.2
8.16.1.1.3.3	16.9.5.3
8.16.1.1.3.4	16.9.5.4
8.16.1.1.3.5*	16.9.5.5*
8.16.1.1.4*	16.9.6*
8.16.1.1.4.1	16.9.6.1
8.16.1.1.4.2	16.9.6.2
8.16.1.1.4.3	16.9.6.3
8.16.1.1.4.4	16.9.6.4
8.16.1.1.5*	16.9.6.5*
8.16.1.1.6*	16.9.7*
8.16.1.1.7*	16.9.3.4*
8.16.1.1.8	16.9.3.5
8.16.1.2	16.9.8
8.16.1.2.1	16.9.8.1
8.16.1.2.2	16.9.8.2
8.16.1.2.3*	16.9.8.3*
8.16.1.2.4	16.9.8.4
8.16.1.2.5	16.9.8.5
8.16.1.3*	16.9.9*
8.16.1.3.1	16.9.9.1
8.16.1.3.2	16.9.9.2
8.16.1.3.3	16.9.9.3
8.16.1.4	16.9.10
8.16.1.4.1	16.9.10.1
8.16.1.4.2*	16.9.10.2*
8.16.1.4.2.1	16.9.10.2.1
8.16.1.4.2.2	16.9.10.2.2
8.16.1.4.2.3	16.9.10.2.3
8.16.1.4.2.4	16.9.10.2.4
8.16.1.4.2.5	16.9.10.2.5
8.16.1.4.2.6	16.9.10.2.6
8.16.1.4.3	16.9.10.3

2016 Edition Section Numbers	2019 Edition Section Numbers
8.16.1.5*	25.2
8.16.1.5.1	25.1.3.2.1
8.16.1.5.2	25.1.3.2.2
8.16.1.5.3	25.1.3.2.3
8.16.2	16.10
8.16.2.1*	16.10.1
8.16.2.2	16.10.2
8.16.2.2.1	16.10.2.1
8.16.2.2.2	16.10.2.2
8.16.2.3	16.10.3
8.16.2.3.1	16.10.3.1
8.16.2.3.2	16.10.3.2
8.16.2.3.3	16.10.3.3
8.16.2.4*	16.10.4
8.16.2.4.1*	16.10.4.1
8.16.2.4.2*	16.10.4.2
8.16.2.4.3	16.10.4.3
8.16.2.4.4	16.10.4.4
8.16.2.4.5	16.10.4.5
8.16.2.4.6*	16.10.4.6*
8.16.2.4.6.1	16.10.4.6.1
8.16.2.4.6.2	16.10.4.6.2
8.16.2.4.6.3	16.10.4.6.3
8.16.2.4.7	16.10.4.7
8.16.2.4.8	16.10.4.8
8.16.2.4.9	16.10.4.9
8.16.2.5	16.10.5
8.16.2.5.1	16.10.5.1
8.16.2.5.2	16.10.5.2
8.16.2.5.2.1*	16.10.5.2.1*
8.16.2.5.2.2	16.10.5.2.2
8.16.2.5.2.3	16.10.5.2.3
8.16.2.5.2.4	16.10.5.2.4
8.16.2.5.3	16.10.5.3
8.16.2.5.3.1	16.10.5.3.1
8.16.2.5.3.2	16.10.5.3.2
8.16.2.5.3.3	16.10.5.3.3
8.16.2.5.3.4	16.10.5.3.4
8.16.2.5.3.5*	16.10.5.3.5
8.16.2.5.3.6	16.10.5.3.6
8.16.2.5.3.7	16.10.5.3.7
8.16.2.6	16.10.6
8.16.2.6.1*	16.10.6.1
8.16.2.6.2	16.10.6.2
8.16.2.6.3	16.10.6.3
8.16.2.6.4	16.10.6.4
8.16.2.6.5	16.10.6.5
8.16.2.6.6	16.10.6.6
8.16.3	16.6
8.16.3.1	16.6.1
8.16.3.2	16.6.2
8.16.3.3	16.6.3
8.16.3.4	16.6.4
8.16.4	16.4

EDUFIRE.IR

2016 Edition Section Numbers	2019 Edition Section Numbers
8.16.4.1	16.4.1
8.16.4.1.1*	16.4.1.1*
8.16.4.1.1.1	16.4.1.1.1
8.16.4.1.2	16.4.1.2
8.16.4.1.3	16.4.1.3
8.16.4.1.4	16.4.1.4
8.16.4.1.4.1	16.4.1.4.1
8.16.4.1.4.2	16.4.1.4.2
8.16.4.1.5	16.4.1.5
8.16.4.2*	16.4.2*
8.16.4.2.1*	16.4.2.1*
8.16.4.2.2	16.4.2.2
8.16.4.2.3	16.4.2.3
8.16.4.2.4	16.4.2.4
8.16.4.3*	16.4.3*
8.16.4.3.1	16.4.3.1
8.16.4.3.2	16.4.3.2
8.16.5	16.5
8.16.6*	16.7*
8.17	16.11
8.17.1*	16.11.2*
8.17.1.1	16.11.2.1
8.17.1.2	16.11.4
8.17.1.3	16.11.5
8.17.1.3.1	16.11.5.1
8.17.1.3.2	16.11.5.2
8.17.1.3.3	16.11.5.3
8.17.1.3.4	16.11.5.4
8.17.1.4	16.11.6
8.17.1.4.1	16.11.6.1
8.17.1.4.2	16.11.6.2
8.17.1.5*	16.11.8*
8.17.1.5.1	16.11.8.1
8.17.1.5.2	16.11.8.2
8.17.1.6*	16.11.10*
8.17.2*	16.12*
8.17.2.1*	16.12.1*
8.17.2.2	16.12.2
8.17.2.3*	16.12.4*
8.17.2.4*	16.12.5*
8.17.2.4.1*	16.12.5.1*
8.17.2.4.1.1	16.12.5.1.1
8.17.2.4.1.2	16.12.5.3
8.17.2.4.2	16.12.5.2
8.17.2.4.3	16.12.5.4
8.17.2.4.4*	16.12.5.5*
8.17.2.4.5	16.12.5.6
8.17.2.4.6*	16.12.5.7*
8.17.2.4.7	16.12.5.8
8.17.2.4.7.1	16.12.5.8.1
8.17.2.4.7.2	16.12.5.8.2
8.17.2.4.7.3	16.12.5.8.3
8.17.2.4.8	16.12.5.9
8.17.2.4.9	16.12.5.10

2016 Edition Section Numbers	2019 Edition Section Numbers
8.17.2.5	16.12.6
8.17.2.5.1	16.12.6.1
8.17.2.5.2	16.12.6.2
8.17.2.6*	16.12.7*
8.17.2.6.1	16.12.7.1
8.17.3	16.13
8.17.3.1	16.13.1
8.17.3.2	16.13.2
8.17.3.3	16.13.3
8.17.3.4	16.13.4
8.17.4	16.14
8.17.4.1*	16.14.1*
8.17.4.1.1	16.14.1.1
8.17.4.1.2	16.14.1.2
8.17.4.1.3	16.14.1.3
8.17.4.1.4	16.14.1.4
8.17.4.2*	16.14.2*
8.17.4.2.1	16.14.2.1
8.17.4.2.2	16.14.2.2
8.17.4.2.3	16.14.2.3
8.17.4.2.4	16.14.2.4
8.17.4.2.5	16.14.2.5
8.17.4.3	16.14.3
8.17.4.3.1	16.14.3.1
8.17.4.3.2	16.14.3.2
8.17.4.3.3	16.14.3.3
8.17.4.3.4	16.14.3.4
8.17.4.3.5	16.14.3.5
8.17.4.3.6	16.14.3.6
8.17.4.3.7	16.14.3.7
8.17.4.4	16.14.4
8.17.4.5*	16.14.5*
8.17.4.5.1*	16.14.5.1*
8.17.4.5.2*	Deleted
8.17.5	16.15
8.17.5.1	16.15.1
8.17.5.1.1*	16.15.1.1*
8.17.5.1.1.1	16.15.1.1.1
8.17.5.1.1.2	16.15.1.1.2
8.17.5.1.1.3	16.15.1.1.3
8.17.5.1.2	16.15.1.2
8.17.5.1.3	16.15.1.3
8.17.5.1.4*	16.15.1.4*
8.17.5.2	16.15.2
8.17.5.2.1	16.15.2.1
8.17.5.2.2*	16.15.2.2*
8.18	16.16
8.18.1	16.16.1
8.18.2*	16.16.2*
Chapter 9 Hanging, Bracing, and Restraint of System Piping	**Chapter 17 Installation Requirements for Hanging and Support of System Piping**

2016 Edition Section Numbers	2019 Edition Section Numbers
9.1	Deleted
9.1.1*	17.1*
9.1.1.1	17.1.1
9.1.1.2	17.1.2
9.1.1.3	17.1.4
9.1.1.3.1*	17.1.4.1*
9.1.1.3.1.1	17.1.4.1.1
9.1.1.3.1.2	17.1.4.1.2
9.1.1.3.1.3	17.1.4.1.3
9.1.1.3.1.4*	17.1.4.1.4*
9.1.1.3.1.5*	17.1.4.1.5
9.1.1.4	17.1.5
9.1.1.5	17.1.6
9.1.1.5.1	17.1.6.1*
9.1.1.5.2*	17.1.6.2*
9.1.1.5.3*	17.1.6.3*
9.1.1.5.4	17.1.6.4
9.1.1.6	17.1.7
9.1.1.6.1	17.1.7.1
9.1.1.6.2	17.1.7.2
9.1.1.6.3	17.1.7.3
9.1.1.7*	17.3*
9.1.1.7.1	17.3.1
9.1.1.7.2	17.3.2
9.1.1.7.3	17.3.3
9.1.1.7.4	17.3.4
9.1.1.7.5*	17.3.5*
9.1.1.7.6	17.3.6
9.1.1.7.7	17.3.7
9.1.1.7.8	17.3.8
9.1.1.7.9	17.3.9
9.1.1.8	17.1.3
9.1.1.8.1*	17.1.3.1*
9.1.1.8.2	17.1.3.2
9.1.2	17.2.1
9.1.2.1	17.2.1.1
9.1.2.2	17.2.1.2
9.1.2.3	17.2.1.3
9.1.2.4	17.2.1.4
9.1.2.5	17.2.1.5
9.1.2.5.1	17.2.1.5.1
9.1.2.5.2	17.2.1.5.2
9.1.2.5.3	17.2.1.5.3
9.1.2.6	17.2.1.6
9.1.3*	17.2.2*
9.1.3.1	17.2.2.1
9.1.3.2	17.2.2.2
9.1.3.3	17.2.2.3
9.1.3.4	17.2.2.4
9.1.3.5	17.2.2.5
9.1.3.6	17.2.2.6
9.1.3.7	17.2.2.7
9.1.3.8	17.2.2.8
9.1.3.9	17.2.2.9

EDUFIRE.IR

2016 Edition Section Numbers	2019 Edition Section Numbers
9.1.3.9.1	17.2.2.9.1
9.1.3.9.2	17.2.2.9.2
9.1.3.9.3*	17.2.2.9.3*
9.1.3.9.4	17.2.2.9.4
9.1.3.10	17.2.2.10
9.1.3.10.1	17.2.2.10.1
9.1.3.10.2	17.2.2.10.2
9.1.3.10.3	17.2.2.10.3
9.1.4	17.2.3
9.1.4.1*	17.2.3.1*
9.1.4.2	17.2.3.2
9.1.4.3	17.2.3.3
9.1.4.4	17.2.3.4
9.1.4.5	17.2.3.5
9.1.4.5.1	17.2.3.5.1
9.1.4.5.2	17.2.3.5.2
9.1.4.5.3	17.2.3.5.3
9.1.5	17.2.4
9.1.5.1	17.2.4.1
9.1.5.1.1	17.2.4.1.1
9.1.5.1.2	17.2.4.1.2
9.1.5.2	17.2.4.2
9.1.5.2.1	17.2.4.2.1
9.1.5.2.2	17.2.4.2.2
9.1.5.2.3	17.2.4.2.3
9.1.5.3	17.2.4.3
9.1.5.3.1	17.2.4.3.1
9.1.5.3.2	17.2.4.3.2
9.1.5.3.3	17.2.4.3.3
9.1.5.3.4	17.2.4.3.4
9.1.5.3.5	17.2.4.3.5
9.1.5.4	17.2.4.4
9.1.5.5	17.2.4.5
9.1.5.6	17.2.4.6
9.1.5.6.1	17.2.4.6.1
9.1.5.6.2	17.2.4.6.2
9.1.5.7	17.2.4.7
9.1.5.7.1	17.2.4.7.1
9.1.5.7.2	17.2.4.7.2
9.1.5.7.3	17.2.4.7.3
9.1.5.7.4	17.2.4.7.4
9.2*	17.4*
9.2.1	17.4.1
9.2.1.1	17.4.1.1
9.2.1.1.1*	17.4.1.1.1*
9.2.1.1.2	17.4.1.1.2
9.2.1.2	17.4.1.2
9.2.1.3*	17.4.1.3*
9.2.1.3.1	17.4.1.3.1
9.2.1.3.2	17.4.1.3.2
9.2.1.3.3*	17.4.1.3.3*
9.2.1.3.3.1	17.4.1.3.3.1
9.2.1.3.3.2	17.4.1.3.3.2
9.2.1.3.3.3*	17.4.1.3.3.3*

2016 Edition Section Numbers	2019 Edition Section Numbers
9.2.1.3.3.4*	17.4.1.3.3.4*
9.2.1.4	17.4.1.4
9.2.1.4.1*	17.4.1.4.1*
9.2.1.4.2	17.4.1.4.2
9.2.1.5	17.4.1.5
9.2.2*	17.4.2*
9.2.2.1	17.4.2.1
9.2.2.2	17.4.2.2
9.2.3	17.4.3
9.2.3.1	17.4.3.1
9.2.3.2*	17.4.3.2*
9.2.3.2.1	17.4.3.2.1
9.2.3.2.2*	17.4.3.2.2*
9.2.3.2.3	17.4.3.2.3
9.2.3.2.4*	17.4.3.2.4*
9.2.3.2.5*	17.4.3.2.5*
9.2.3.3	17.4.3.3
9.2.3.4*	17.4.3.4*
9.2.3.4.1	17.4.3.4.1
9.2.3.4.2	17.4.3.4.2
9.2.3.4.3	17.4.3.4.3
9.2.3.4.4*	17.4.3.4.4*
9.2.3.4.4.1	17.4.3.4.4.1
9.2.3.4.4.2	17.4.3.4.4.2
9.2.3.4.4.3	17.4.3.4.4.3
9.2.3.4.4.4	17.4.3.4.4.4
9.2.3.5*	17.4.3.5*
9.2.3.5.1	17.4.3.5.1
9.2.3.5.2*	17.4.3.5.2*
9.2.3.5.2.1	17.4.3.5.2.1
9.2.3.5.2.2	17.4.3.5.2.2
9.2.3.5.2.3	17.4.3.5.2.3
9.2.3.6*	17.4.3.6*
9.2.3.7	17.4.3.7
9.2.4	17.4.4
9.2.4.1	17.4.4.1
9.2.4.2	17.4.4.2
9.2.4.3	17.4.4.3
9.2.4.3.1	17.4.4.3.1
9.2.4.4	17.4.4.4
9.2.4.4.1	17.4.4.4.1
9.2.4.5	17.4.4.5
9.2.4.6	17.4.4.7
9.2.4.7*	17.4.4.8*
9.2.5	17.4.5
9.2.5.1	17.4.5.1
9.2.5.2	17.4.5.2
9.2.5.3*	17.4.5.3*
9.2.5.4	17.4.5.4
9.2.5.4.1	17.4.5.4.1
9.2.5.4.2*	17.4.5.4.2*
9.2.5.4.3	17.4.5.4.3
9.2.5.4.4	17.4.5.4.4
9.2.5.5	17.4.5.5

2016 Edition Section Numbers	2019 Edition Section Numbers
9.2.6*	17.5*
9.2.6.1	17.5.1
9.2.6.1.1	17.5.1.1
9.2.6.1.2	17.5.1.2
9.2.6.1.3	17.5.1.3
9.2.6.2	17.5.2
9.2.6.2.1	17.5.2.1
9.2.6.2.2	17.5.2.2
9.2.6.3	17.5.3
9.2.6.3.1*	17.5.3.1*
9.2.6.3.2*	17.5.3.2*
9.2.6.3.3	17.5.3.3
9.2.6.4	17.5.4
9.2.6.4.1	17.5.4.1
9.2.6.4.2*	17.5.4.2*
9.2.6.4.2.1	17.5.4.2.1
9.2.6.4.3*	17.5.4.3*
9.2.6.4.4	17.5.4.4
9.2.6.4.4.1	17.5.4.4.1
9.2.6.4.5	17.5.4.5
9.2.6.4.5.1	17.5.4.5.1
9.2.6.5	17.5.5
9.2.6.5.1	17.5.5.1
9.2.6.5.2*	17.5.5.2*
9.2.6.5.3	17.5.5.3
9.2.6.6	17.5.6
9.2.6.6.1*	17.5.6.1*
9.2.6.6.2*	17.5.6.2*
9.2.6.7	17.5.7
9.2.6.7.1	17.5.7.1
9.2.6.7.2	17.5.7.2
9.3.1	18.1*
9.3.1.1	18.1.1
9.3.1.2	18.1.2
9.3.1.3	18.1.3
9.3.2*	18.2*
9.3.2.1	18.2.1
9.3.2.2	18.2.2
9.3.2.3	18.2.3
9.3.2.3.1	18.2.3.1
9.3.2.3.2	18.2.3.2
9.3.2.4*	18.2.4*
9.3.3*	18.3*
9.3.3.1	18.3.1
9.3.3.2	18.3.2
9.3.3.3*	18.3.3*
9.3.3.4	18.3.4
9.3.4*	18.4*
9.3.4.1	18.4.1*
9.3.4.2	18.4.2
9.3.4.3	18.4.3
9.3.4.4	18.4.4
9.3.4.5	18.4.5
9.3.4.6	18.4.6

EDUFIRE.IR

2016 Edition Section Numbers	2019 Edition Section Numbers
9.3.4.7	18.4.7
9.3.4.8	18.4.8
9.3.4.9	18.4.9
9.3.4.10*	18.4.10*
9.3.4.11*	18.4.11*
9.3.4.11.1	18.4.11.1
9.3.4.12	18.4.12
9.3.4.13	18.4.13
9.3.4.13.1	18.4.13.1
9.3.5*	18.5*
9.3.5.1	18.5.1
9.3.5.1.1	18.5.1.1
9.3.5.1.2	18.5.1.2
9.3.5.1.3*	18.5.1.3*
9.3.5.1.4*	18.5.1.4*
9.3.5.1.4.1	18.5.1.4.1
9.3.5.1.5*	18.5.1.5*
9.3.5.1.6	18.5.1.6
9.3.5.2	18.5.2
9.3.5.2.1	18.5.2.1
9.3.5.2.2	18.5.2.2
9.3.5.2.2.1	18.5.2.2.1
9.3.5.2.3*	18.5.2.3*
9.3.5.2.3.1*	18.5.2.3.1*
9.3.5.2.3.2	18.5.2.3.2
9.3.5.3	18.5.3
9.3.5.3.1	18.5.3.1
9.3.5.3.2	18.5.3.2
9.3.5.4	18.5.4
9.3.5.4.1	18.5.4.1
9.3.5.4.2*	18.5.4.2*
9.3.5.4.3	18.5.4.3
9.3.5.5	18.5.5
9.3.5.5.1*	18.5.5.1*
9.3.5.5.1.1	18.5.5.1.1
9.3.5.5.2*	18.5.5.2*
9.3.5.5.2.1	18.5.5.2.1
9.3.5.5.2.2	18.5.5.2.2
9.3.5.5.2.3	18.5.5.2.3
9.3.5.5.2.4	18.5.5.2.4
9.3.5.5.3	18.5.5.3
9.3.5.5.4	18.5.5.4
9.3.5.5.5	18.5.5.5
9.3.5.5.6	18.5.5.6
9.3.5.5.7	18.5.5.7
9.3.5.5.8	18.5.5.8
9.3.5.5.9	18.5.5.9
9.3.5.5.10*	18.5.5.10*
9.3.5.5.10.1	18.5.5.10.1
9.3.5.5.10.2	18.5.5.10.2
9.3.5.5.10.3	18.5.5.10.3
9.3.5.5.11	18.5.5.11
9.3.5.6	18.5.6
9.3.5.6.1	18.5.6.1

2016 Edition Section Numbers	2019 Edition Section Numbers
9.3.5.6.2	18.5.6.2
9.3.5.6.3	18.5.6.3
9.3.5.7	18.5.7
9.3.5.7.1	18.5.7.1
9.3.5.7.2*	18.5.7.2*
9.3.5.8	18.5.8
9.3.5.8.1*	18.5.8.1*
9.3.5.8.2	18.5.8.2
9.3.5.8.3	18.5.8.3
9.3.5.8.4	18.5.8.4
9.3.5.8.5	18.5.8.5
9.3.5.9*	18.5.9*
9.3.5.9.1*	18.5.9.1*
9.3.5.9.2	18.5.9.2
9.3.5.9.3	18.5.9.3
9.3.5.9.3.1	18.5.9.3.1
9.3.5.9.3.2*	18.5.9.3.2*
9.3.5.9.4*	18.5.9.4*
9.3.5.9.5*	18.5.9.5*
9.3.5.9.6*	18.5.9.6*
9.3.5.9.6.1*	18.5.9.6.1*
9.3.5.9.6.2	18.5.9.6.2
9.3.5.9.7	18.5.9.7
9.3.5.10	18.5.10
9.3.5.11*	18.5.11*
9.3.5.11.1*	18.5.11.1*
9.3.5.11.2	18.5.11.2
9.3.5.11.3	18.5.11.3
9.3.5.11.4	18.5.11.4
9.3.5.11.5	18.5.11.5
9.3.5.11.6	18.5.11.6
9.3.5.11.7	18.5.11.7
9.3.5.11.8	18.5.11.8
9.3.5.11.9*	18.5.11.9*
9.3.5.11.9.1	18.5.11.9.1
9.3.5.11.10	18.5.11.10
9.3.5.11.11	18.5.11.11
9.3.5.12*	18.5.12*
9.3.5.12.1	18.5.12.1
9.3.5.12.2*	18.5.12.2*
9.3.5.12.3*	18.5.12.3*
9.3.5.12.4*	18.5.12.4*
9.3.5.12.5	18.5.12.5
9.3.5.12.6	18.5.12.6
9.3.5.12.7	18.5.12.6.1
9.3.5.12.7.1*	18.5.12.6.2
9.3.5.12.8	18.5.12.7
9.3.5.12.8.1*	18.5.12.7.1*
9.3.5.12.8.2	18.5.12.7.2
9.3.5.12.8.3	18.5.12.7.3
9.3.5.12.8.4	18.5.12.7.4
9.3.5.13	18.5.13
9.3.6	18.6
9.3.6.1*	18.6.1*

2016 Edition Section Numbers	2019 Edition Section Numbers
9.3.6.2	18.6.2
9.3.6.2.1	18.6.2.1
9.3.6.2.2	18.6.2.2
9.3.6.3	18.6.3
9.3.6.4*	18.6.4*
9.3.6.5	18.6.5
9.3.6.6*	18.6.6*
9.3.6.7	18.6.7
9.3.7	18.7
9.3.7.1	18.7.1
9.3.7.1.1	18.7.1.1
9.3.7.2	18.7.2
9.3.7.3	18.7.3
9.3.7.4	18.7.4
9.3.7.5	18.7.5
9.3.7.6	18.7.6
9.3.7.7	18.7.7
9.3.7.8*	18.7.8*
9.3.8*	18.8*
9.3.8.1	18.8.1
9.3.8.2	18.8.2
Chapter 10 Underground Requirements	**Chapter 6 Installation of Underground Piping**
10.1*	6.1*
10.1.1*	6.1.1*
10.1.1.1	6.1.1.1
10.1.1.2	6.1.1.2
10.1.1.2.1	6.1.1.2.1
10.1.1.2.2	6.1.1.2.2
10.1.1.3	6.1.1.3
10.1.1.3.1	6.1.1.3.1
10.1.2*	6.1.2*
10.1.3*	6.1.3*
10.1.4*	6.1.4*
10.2	6.2
10.2.1	6.2.1
10.2.1.1	6.2.1.1
10.2.1.2	6.2.1.2
10.2.1.2.1	6.2.1.2.1
10.2.1.2.2	6.2.1.2.2
10.2.2	6.2.2
10.2.3	6.2.3
10.2.3.1	6.2.3.1
10.3	6.3
10.3.1	6.3.1*
10.3.2	6.3.2
10.3.3	6.3.3
10.3.3.1	6.3.3.1
10.3.4	6.3.4
10.3.5	6.3.5
10.3.5.1	6.3.5.1
10.3.5.2	6.3.5.2

EDUFIRE.IR

2016 Edition Section Numbers	2019 Edition Section Numbers
10.3.5.3*	6.3.5.3*
10.3.6	6.3.6
10.4	6.4
10.4.1	6.4.1
10.4.1.1	6.4.1.1
10.4.1.2	6.4.1.2
10.4.1.3*	6.4.1.3*
10.4.2*	6.4.2*
10.4.2.1	6.4.2.1
10.4.2.1.1*	6.4.2.1.1*
10.4.2.1.2	6.4.2.1.2
10.4.2.1.3	6.4.2.1.3
10.4.2.1.4	6.4.2.1.4
10.4.2.1.5	6.4.2.1.5
10.4.2.1.6	6.4.2.1.6
10.4.2.1.7	6.4.2.1.7
10.4.2.1.7.1	6.4.2.1.7.1
10.4.2.2	6.4.2.2
10.4.2.2.1	6.4.2.2.1
10.4.2.2.2	6.4.2.2.2
10.4.2.2.2.1	6.4.2.2.2.1
10.4.2.2.3	6.4.2.2.3
10.4.2.2.3.1	6.4.2.2.3.1
10.4.2.2.4	6.4.2.2.4
10.4.2.2.4.1	6.4.2.2.4.1
10.4.2.2.5	6.4.2.2.5
10.4.2.2.6	6.4.2.2.6
10.4.3	6.4.3
10.4.3.1*	6.4.3.1*
10.4.3.1.1*	6.4.3.1.1*
10.4.3.1.2*	6.4.3.1.2*
10.4.3.1.2.1	6.4.3.1.2.1
10.4.3.2*	6.4.3.2*
10.4.3.2.1	6.4.3.2.1
10.4.3.2.1.1	6.4.3.2.1.1*
10.4.3.2.1.2	6.4.3.2.1.2
10.4.3.2.1.3	6.4.3.2.1.3
10.4.3.2.1.4*	6.4.3.2.1.4*
10.4.3.2.1.5	6.4.3.2.1.5
10.4.3.2.2	6.4.3.2.2
10.4.3.2.2.1	6.4.3.2.2.1
10.4.3.2.2.2	6.4.3.2.2.2
10.4.3.2.3	6.4.3.2.3
10.4.3.2.4	6.4.3.2.4
10.4.3.2.4.1	6.4.3.2.4.1
10.5	6.5
10.5.1*	6.5.1*
10.5.1.1*	6.5.1.1*
10.6*	6.6*
10.6.1*	6.6.1*
10.6.1.1	6.6.1.1
10.6.1.2	6.6.1.2
10.6.1.3	6.6.1.3
10.6.1.4	6.6.1.4

2016 Edition Section Numbers	2019 Edition Section Numbers
10.6.2*	6.6.2*
10.6.2.1	6.6.2.1
10.6.2.1.1	6.6.2.1.1
10.6.2.1.1.1	6.6.2.1.1.1
10.6.2.1.1.2	6.6.2.1.1.2
10.6.2.1.2	6.6.2.1.2
10.6.2.1.2.1	6.6.2.1.2.1
10.6.2.1.2.2	6.6.2.1.2.2
10.6.2.1.2.3	6.6.2.1.2.3
10.6.2.1.2.4	6.6.2.1.2.4
10.6.2.1.2.5	6.6.2.1.2.5
10.6.2.1.2.6	6.6.2.1.2.6
10.6.2.1.2.7	6.6.2.1.2.7
10.6.2.1.3	6.6.2.1.3
10.6.2.1.4	6.6.2.1.4
10.6.2.1.4.1	6.6.2.1.4.1
10.6.2.1.4.2	6.6.2.1.4.2
10.6.2.1.4.3	6.6.2.1.4.3
10.6.2.1.4.4	6.6.2.1.4.4
10.6.2.1	6.6.2.2
10.6.2.2.1	6.6.2.2.1
10.6.2.2.2	6.6.2.2.2
10.6.2.2.3	6.6.2.2.3
10.6.2.3	6.6.2.3
10.6.2.3.1	6.6.2.3.1
10.6.2.3.2	6.6.2.3.2
10.6.2.3.3	6.6.2.3.3
10.6.2.4*	6.6.2.4*
10.6.2.5	6.6.2.5
10.6.2.5	6.6.2.5.1
10.6.3*	6.6.3*
10.7	6.7
10.7.1	6.7.1
10.7.1.1	6.7.1.1
10.7.1.1.1	6.7.1.1.1
10.7.1.2	6.7.1.2
10.7.1.3	6.7.1.3
10.8	6.8
10.8.1	6.8.1
10.8.2	6.8.2
10.8.3	6.8.3
10.8.4	6.8.4
10.8.5	6.8.5
10.8.6	6.8.6
10.8.7	6.8.7
10.8.8	6.8.8
10.8.9	6.8.9
10.8.10	6.8.10
10.9	6.9
10.9.1	6.9.1
10.9.2	6.9.2
10.9.3	6.9.3
10.9.3.1	6.9.3.1
10.9.3.2	6.9.3.2

2016 Edition Section Numbers	2019 Edition Section Numbers
10.9.4	6.9.4
10.9.5	6.9.5
10.9.6	6.9.6
10.10	6.10
10.10.1	6.10.1
10.10.2	6.10.2
10.10.2.1*	6.10.2.1*
10.10.2.1.1	6.10.2.1.1
10.10.2.1.2	6.10.2.1.2
10.10.2.1.3	6.10.2.1.3
10.10.2.1.4	6.10.2.1.4
10.10.2.2	6.10.2.2
10.10.2.2.1*	6.10.2.2.1*
10.10.2.2.2	6.10.2.2.2
10.10.2.2.3	6.10.2.2.3
10.10.2.2.4*	6.10.2.2.4*
10.10.2.2.5	6.10.2.2.5
10.10.2.2.6*	6.10.2.2.6*
10.10.2.3	6.10.2.3*
10.10.2.4	6.10.2.4
10.10.2.4.1	6.10.2.4.1
10.10.2.4.2	6.10.2.4.2
10.10.2.4.3	6.10.2.4.3
10.10.2.4.4	6.10.2.4.4
10.10.2.5	6.10.2.5
10.10.2.5.1	6.10.2.5.1
10.10.2.5.2	6.10.2.5.2
Chapter 11 Design Approaches	**Chapter 19 Design Approaches**
11.1	19.2
11.1.1	19.2.1
11.1.2*	19.2.2*
11.1.3	19.2.3
11.1.4	19.2.4
11.1.4.1*	19.2.4.1*
11.1.4.2*	19.2.4.2*
11.1.5	19.2.5
11.1.5.1	19.2.5.1
11.1.5.2*	19.2.5.2*
11.1.5.3*	19.2.5.3*
11.1.6	19.2.6
11.1.6.1	19.2.6.1
11.1.6.2*	19.2.6.2*
11.1.6.3	19.2.6.3
11.1.6.3.1	19.2.6.3.1
11.1.6.4*	19.2.6.4*
11.1.7*	19.2.7*
11.2	19.3
11.2.1	19.3.1
11.2.1.1*	19.3.1.1*
11.2.1.2	19.3.1.2
11.2.1.2.1	19.3.1.2.1
11.2.1.2.2	19.3.1.2.2

EDUFIRE.IR

2016 Edition Section Numbers	2019 Edition Section Numbers
11.2.1.2.3	19.3.1.2.3
11.2.1.2.4	19.3.1.2.4
11.2.2	19.3.2
11.2.2.1	19.3.2.1
11.2.2.2	19.3.2.2
11.2.2.3	19.3.2.3
11.2.2.4	19.3.2.4
11.2.2.5	19.3.2.5
11.2.2.6*	19.3.2.6*
11.2.2.6.1	19.3.2.6.1
11.2.2.6.2	19.3.2.6.2
11.2.2.6.2.1	19.3.2.6.2.1
11.2.2.6.2.2	19.3.2.6.2.2
11.2.2.7	19.3.2.7
11.2.3	19.3.3
11.2.3.1	19.3.3.1
11.2.3.1.1	19.3.3.1.1
11.2.3.1.2	19.3.3.1.2
11.2.3.1.3	19.3.3.1.3
11.2.3.1.4	19.3.3.1.4
11.2.3.1.5	19.3.3.1.5
11.2.3.1.5.1*	19.3.3.1.5.1*
11.2.3.1.5.2	19.3.3.1.5.2
11.2.3.2	19.3.3.2
11.2.3.2.1	19.3.3.2.1
11.2.3.2.1.1	19.3.3.2.1.1
11.2.3.2.1.2	19.3.3.2.1.2
11.2.3.2.1.3	19.3.3.2.1.3
11.2.3.2.2	19.3.3.2.2
11.2.3.2.2.1	19.3.3.2.2.1
11.2.3.2.2.2	19.3.3.2.2.2
11.2.3.2.2.3	19.3.3.2.2.3
11.2.3.2.2.4	19.3.3.2.2.4
11.2.3.2.3	19.3.3.2.3
11.2.3.2.3.1	19.3.3.2.3.1
11.2.3.2.3.2	19.3.3.2.3.2
11.2.3.2.3.3	19.3.3.2.3.3
11.2.3.2.4	19.3.3.2.4
11.2.3.2.5*	19.3.3.2.5*
11.2.3.2.6	19.3.3.2.6
11.2.3.2.7*	19.3.3.2.8*
11.2.3.2.7.1	19.3.3.2.8.1
11.2.3.2.7.2	19.3.3.2.8.2
11.2.3.3	19.3.3.3
11.2.3.3.1*	19.3.3.3.1*
11.2.3.3.2	19.3.3.3.2
11.2.3.3.3	19.3.3.3.3
11.2.3.3.4	19.3.3.3.4
11.2.3.3.5	19.3.3.3.5
11.2.3.3.6	19.3.3.3.6
11.2.3.3.7	19.3.3.3.7
11.2.3.4	19.3.3.4
11.2.3.4.1	19.3.3.4.1
11.2.3.4.2*	19.3.3.4.2*

2016 Edition Section Numbers	2019 Edition Section Numbers
11.2.3.4.3	19.3.3.4.3
11.3	19.4
11.3.1	19.4.1
11.3.1.1*	19.4.1.1*
11.3.1.2*	19.4.1.2*
11.3.1.2.1*	19.4.1.2.1*
11.3.1.2.2	19.4.1.2.2
11.3.1.3	19.4.1.3
11.3.1.4	19.4.1.4
11.3.1.4.1	19.4.1.4.1
11.3.1.5	19.4.1.5
11.3.1.6	19.4.1.6
11.3.2	19.4.2
11.3.2.1*	19.4.2.1*
11.3.2.2	19.4.2.2
11.3.3	19.4.3
11.3.3.1	19.4.3.1
11.3.3.2	19.4.3.2
11.3.3.3	19.4.3.3
11.3.4	19.4.3.4
11.3.4.1	19.4.3.4.1
11.3.4.2	19.4.3.4.2
11.3.4.3	19.4.3.4.3
11.3.5	19.4.4
Chapter 12 General Requirements for Storage	Various
12.1	Deleted
12.1.1.1	20.6.6.2*
12.1.1.2	20.6.6.3
12.1.1.3*	20.6.6.6*
12.1.2	20.6.1
12.1.3*	20.6.2*
12.1.3.1	20.6.2.1
12.1.3.1.1	20.6.2.2
12.1.3.1.2	20.6.2.3
12.1.3.1.3	20.6.2.4
12.1.3.1.3.1	20.6.2.4.1
12.1.3.1.3.2	20.6.2.4.2
12.1.3.1.4*	20.6.2.5*
12.1.3.1.4.1	20.6.2.5.1
12.1.3.2	20.6.2.6
12.1.3.3	20.6.3.2
12.1.3.4	20.6.4
12.1.3.4.1*	20.6.4.1*
12.1.3.4.1.1	20.6.4.1.1
12.1.3.4.1.2	20.6.4.1.2
12.1.3.4.1.3	20.6.4.1.3
12.1.3.4.2	20.6.4.2
12.1.3.4.3	20.6.4.3
12.1.3.4.4	20.6.4.4
12.1.3.4.8	20.6.4.5
12.1.4	20.6.7*
12.1.4.1*	20.6.7.1

2016 Edition Section Numbers	2019 Edition Section Numbers
12.2*	20.11*
12.2.1	20.11.1.1
12.2.2	20.11.1.2
12.3*	20.10.1
12.4*	20.13.2*
12.4.1	20.13.2.1
12.4.2*	20.13.2.2*
12.5	20.13.3
12.6	Deleted
12.6.1	21.1.2*
12.6.2	21.1.3
12.6.3	21.1.4
12.6.4*	21.1.5*
12.6.5	21.1.6
12.6.6	21.1.7
12.6.7	20.10.3
12.6.7.1	23.1.1
12.6.7.2	22.1.1
12.6.7.3	21.1.2
12.6.8	21.1.8
12.6.8.1	21.1.8.1
12.6.8.2	21.1.8.2
12.6.9	21.1.9
12.7	21.1.10
12.7.1	21.1.10.1
12.7.2	20.10.4
12.7.3	21.1.10.2
12.7.4	20.12.3
12.7.5	20.12.4
12.7.6	20.12.5
12.7.6.1	22.1.2
12.7.6.2	22.1.3
12.7.6.3	23.1.2.7
12.7.7	20.13.1
12.7.7.1	20.13.1.1
12.7.7.2	20.13.1.2
12.7.7.3	21.1.10.4
12.8	20.12.2
12.8.1*	20.12.2.1*
12.8.2*	20.12.2.2*
12.8.3	20.12.2.3
12.8.4	20.12.2.4
12.8.5	20.12.2.5
12.8.6	20.12.2.6
12.9	20.7
12.9.1*	20.7.1*
12.9.1.1	20.7.1.1
12.9.1.2	20.7.1.2
12.9.2	20.7.2
12.10	20.8
12.10.1*	20.8.1*
12.10.2	20.8.2
12.10.2.1	20.8.2.1
12.10.3	20.8.3

EDUFIRE.IR

2016 Edition Section Numbers	2019 Edition Section Numbers
12.11*	20.9*
12.11.1	20.9.1.1
12.11.2	20.9.1.2
12.11.3	20.9.1.3
12.11.4	20.9.1.4
12.11.5	20.9.1.5
12.12*	20.14*
12.12.1	20.14.1
12.12.1.1*	20.14.1.1*
12.12.1.2	20.14.1.2
12.12.1.2.1	20.14.1.2.1
12.12.1.3	20.14.1.3
12.12.2	20.14.2
12.12.2.1	20.14.2.1
12.12.2.2	20.14.2.2
12.12.2.2.1	20.14.2.2.1
12.12.2.2.2	20.14.2.2.2
12.12.2.2.3	20.14.2.2.3
12.12.2.2.4	20.14.2.2.4
12.12.2.2.4.1	20.14.2.2.4.1
12.12.2.2.4.2	20.14.2.2.4.2
12.12.2.2.4.3	20.14.2.2.4.3
12.12.2.3	20.14.2.3
12.12.2.3.1	20.14.2.3.1
12.12.3	20.14.3
12.12.3.1	20.14.3.1
12.12.3.2	20.14.3.2
12.12.3.3	20.14.3.3
12.12.4	Deleted
Chapter 13 Protection of Miscellaneous and Low-Piled Storage	Various
13.1	Deleted
13.1.1	Deleted
13.1.2	4.4
13.1.3	Deleted
13.1.3.1	4.3.1.5.1
13.1.3.2	4.3.1.5.2
13.2	Deleted
13.2.1	Deleted
13.2.2	Deleted
13.2.3	19.3.3.2.7
13.3	Deleted
13.3.3.1	Deleted
13.3.3.2	Deleted
13.3.3.3	Deleted
13.3.4	Deleted
13.3.4.1	Deleted
13.3.4.2	Deleted
13.3.4.3	Deleted
13.3.4.3.1	Deleted
13.3.4.4	Deleted
13.3.4.5	Deleted

2016 Edition Section Numbers	2019 Edition Section Numbers
Chapter 14 Protection for Palletized, Solid-Piled, Bin Box, Shelf, or Back-to-Back Shelf Storage of Class I through Class IV Commodities	Various
14.1	Deleted
14.1.1	Deleted
14.1.2	Deleted
14.1.3	Deleted
14.2	21.2
14.2.1	21.2.7
14.2.2	Deleted
14.2.3	Deleted
14.2.3.1	Deleted
14.2.3.2	Deleted
14.2.4	21.2.2
14.2.4.1	21.2.2.1
14.2.4.2	21.2.2.2
14.2.4.3	21.2.2.3
14.2.4.4	21.2.2.4
14.2.4.5	21.2.2.5
14.2.4.6	21.2.2.6
14.2.4.7	21.2.2.7
14.2.5	21.2.3
14.2.5.1	21.2.3.1
14.2.5.2	21.2.3.2
14.2.5.3	21.2.3.3
14.2.5.4	21.2.3.4
14.2.5.5	21.2.3.5
14.3	Deleted
14.3.1	22.2
14.3.2	22.1.4
14.3.3	22.1.5
14.3.3.1	22.1.5.1
14.3.4	Deleted
14.3.5	22.1.5.2
14.3.5.1	22.1.5.2.1
14.3.6	22.1.5.3
14.4	23.3
14.4.1	23.3.1
14.4.2	23.1.3
14.4.3	Deleted
14.5	21.2.4
14.5.1	21.2.4.1
14.5.1.1	21.2.4.1.1
14.5.1.2	21.2.4.1.2
14.6	Deleted
Chapter 15 Protection for Palletized, Solid-Piled, Bin Box, Shelf, or Back-to-Back Shelf Storage of Plastic and Rubber Commodities	Various

2016 Edition Section Numbers	2019 Edition Section Numbers
15.1	Deleted
15.1.1*	22.1.5.4*
15.2*	21.3*
15.2.1	Deleted
15.2.2.1	21.3.1
15.2.2.2*	21.3.2*
15.2.2.3	Deleted
15.2.2.4	Deleted
15.2.2.5*	21.3.3*
15.2.2.6	21.3.4
15.2.2.7*	21.3.3.1*
15.2.2.8*	21.3.3.2*
15.2.2.8.1	Deleted
15.2.2.8.2	21.3.3.2.1
15.2.2.9	21.3.5
15.3	Deleted
15.3.1	22.3
15.3.2	Deleted
15.3.3	Deleted
15.3.3.1	Deleted
15.3.3.2	Deleted
15.3.4	Deleted
15.3.5	Deleted
15.4	23.4
15.4.1	23.4.1
15.4.2	23.4.2
15.4.3	Deleted
15.4.4	Deleted
15.5	20.9.2.1
Chapter 16 Protection of Rack Storage of Class I Through Class IV Commodities	Various
16.1	Deleted
16.1.1	Deleted
16.1.2*	Deleted
16.1.2.1	Deleted
16.1.2.2*	20.10.2*
16.1.2.3*	22.1.6*
16.1.2.4	Merged Chap 25
16.1.2.4.1	25.8.3.1.1
16.1.2.4.2	25.8.3.1.2
16.1.2.4.3	25.8.3.2
16.1.2.4.3.1	Merged Chap 25
16.1.2.4.3.2	25.8.3.2.3
16.1.2.4.3.3	25.8.3.2.4
16.1.2.4.3.4	25.8.3.2.5
16.1.2.4.4	25.8.3.3
16.1.2.4.4.1	25.8.3.3.1
16.1.2.4.4.2	25.8.3.3.2
16.1.2.4.4.3	25.8.3.3.3
16.1.2.4.5	25.8.3.4
16.1.2.4.6	25.8.3.5
16.1.2.4.7	25.8.3.6

EDUFIRE.IR

2016 Edition Section Numbers	2019 Edition Section Numbers
16.1.3	Merged Chap 25
16.1.4	Deleted
16.1.4.1	Merged Chap 25
16.1.4.2	Merged Chap 25
16.1.4.3	Merged Chap 25
16.1.5	Deleted
16.1.5.1	Deleted
16.1.5.1.1	20.9.2.2
16.1.5.1.2	20.9.2.3
16.1.5.1.3	20.9.2.4
16.1.5.1.3.1	Merged Chap 25
16.1.5.2	20.9.2.6
16.1.5.3	20.9.2.7
16.1.5.3.1	20.9.2.7.1
16.1.5.3.2	20.9.2.7.2
16.1.5.4	20.9.2.7.3
16.1.6	25.6.3
16.1.6.1	25.6.3.1
16.1.6.2	25.6.3.2
16.1.6.3	Merged Chap 25
16.1.6.4	25.5.2.1.4
16.1.6.5	Merged Chap 25
16.1.6.6	Merged Chap 25
16.1.6.7	25.6.4.3
16.1.6.8	Merged Chap 25
16.1.7	Deleted
16.1.8	Deleted
16.1.8.1	Deleted
16.1.8.2	25.5.1.5
16.1.8.3	Deleted
16.1.8.4	25.5.1.2
16.1.9	25.7
16.1.9.1	25.7.1
16.1.9.2	25.7.2
16.1.10	Deleted
16.1.10.1	Merged Chap 25
16.1.10.2	Merged Chap 25
16.1.10.3	Merged Chap 25
16.1.11	Deleted
16.1.11.1	Merged Chap 25
16.1.11.1.1	Deleted
16.1.11.1.2	Deleted
16.2	Deleted
16.2.1	21.4
16.2.1.1	Deleted
16.2.1.2	Deleted
16.2.1.2.1	Deleted
16.2.1.2.2	Deleted
16.2.1.2.3	Merged Chap 25
16.2.1.3	21.4.1
16.2.1.3.1*	21.4.1.1*
16.2.1.3.2*	21.4.1.2*
16.2.1.3.2.1*	21.4.1.2.1*
16.2.1.3.3	21.4.1.3

2016 Edition Section Numbers	2019 Edition Section Numbers
16.2.1.3.3.1	21.4.1.3.1
16.2.1.3.3.2	21.4.1.3.2
16.2.1.3.3.3	21.4.1.3.3
16.2.1.3.3.4	21.4.1.3.4
16.2.1.3.4	21.4.1.4
16.2.1.3.4.1	21.4.1.4.1
16.2.1.3.4.7	21.4.1.4.2
16.2.1.4	Deleted
16.2.1.4.1	Deleted
16.2.1.4.1.1	Deleted
16.2.1.4.1.2	Deleted
16.2.1.4.1.3	Deleted
16.2.1.4.1.4	25.4.4
16.2.1.4.1.5	25.4.5
16.2.1.4.2	Deleted
16.2.1.4.2.1*	25.5.2.2.1
16.2.1.4.2.2*	25.5.2.2.2
16.2.1.4.2.3*	Merged Chap 25
16.2.1.4.2.4*	25.4.2.1
16.2.1.4.2.5	Merged Chap 25
16.2.1.4.2.6	25.5.1.6.1
16.2.1.4.3	Deleted
16.2.1.4.4	Deleted
16.2.2	Deleted
16.2.2.1	22.4
16.2.2.1.1	Merged Chap 25
16.2.2.1.1.1	25.6.3.3
16.2.2.2	Deleted
16.2.2.3	Deleted
16.2.2.4	Deleted
16.2.2.4.1	25.2.4.1.1.1
16.2.2.4.2	25.2.4.1.1.2
16.2.2.5	25.2.4.1.2
16.2.2.6	Deleted
16.2.2.7	Deleted
16.2.2.7.1	Deleted
16.2.2.7.2	25.4.2
16.2.2.7.3	Deleted
16.2.2.7.4	25.5.2.3.1
16.2.2.7.5	Deleted
16.2.2.7.6	25.5.2.3.3
16.2.2.7.7	Merged Chap 25
16.2.2.7.8	Merged Chap 25
16.2.3*	23.5
16.2.3.1	23.5.1
16.2.3.2	23.1.4.1
16.2.3.2.1	25.6.3.4
16.2.3.3	23.1.4.2
16.2.3.4	23.1.4.3
16.2.3.5	Deleted
16.2.3.6	Deleted
16.2.3.6.1	Deleted
16.2.3.6.2	Deleted
16.2.3.6.3	Deleted

2016 Edition Section Numbers	2019 Edition Section Numbers
16.2.3.6.4	25.5.2.4
16.2.3.6.5	Deleted
16.2.3.6.6	Deleted
16.2.3.6.7	Deleted
16.2.3.6.8	Deleted
16.2.3.6.9	Deleted
16.2.4	21.8
16.2.4.1	21.8.1
16.2.4.1.1*	21.8.1.1*
16.2.4.1.2	21.8.1.2
16.3	Deleted
16.3.1	21.4.2
16.3.1.1*	21.4.2.1*
16.3.1.1.1	21.4.2.1.1
16.3.1.2.1	21.4.2.2
16.3.1.3	Deleted
16.3.1.3.1	Deleted
16.3.1.3.1.1	25.4.6.1
16.3.1.3.1.2	25.4.6.2
16.3.1.3.1.3	25.4.6.3
16.3.1.3.2	25.4.6.3
16.3.1.3.2.1	25.5.18
16.3.1.3.2.2	Merged Chap 25
16.3.1.3.2.3	Merged Chap 25
16.3.1.3.2.4	Merged Chap 25
16.3.1.3.2.5	Merged Chap 25
16.3.1.3.2.6	25.5.1.6
16.3.1.3.2.7	25.5.1.7
16.3.1.3.3	Deleted
16.3.1.3.3.1	Deleted
16.3.2	Deleted
16.3.2.1	Deleted
16.3.2.1.1	Deleted
16.3.2.1.1.1	Deleted
16.3.2.2	22.1.7
16.3.2.3	Deleted
16.3.2.4	Deleted
16.3.2.4.1	Deleted
16.3.2.4.2	Deleted
16.3.2.5	Deleted
16.3.2.6	Deleted
16.3.2.7	Deleted
16.3.2.7.1	Deleted
16.3.2.7.2	Deleted
16.3.2.7.3	Deleted
16.3.2.7.4	Deleted
16.3.2.7.5	Deleted
16.3.2.7.6	Deleted
16.3.2.7.7	Deleted
16.3.2.7.8	Deleted
16.3.2.7.9	Deleted
16.3.2.7.10	Deleted
16.3.3*	Deleted
16.3.3.1	Deleted

EDUFIRE.IR

2016 Edition Section Numbers	2019 Edition Section Numbers
16.3.3.2	Deleted
16.3.3.2.1	Deleted
16.3.3.2.1.1	Deleted
16.3.3.3	Deleted
16.3.3.4	Deleted
16.3.3.5	Deleted
16.3.3.5.1	Deleted
16.3.3.5.2	Deleted
16.3.3.5.3	Deleted
16.3.3.5.4	Deleted
16.3.3.5.5	Deleted
16.3.3.5.6	Deleted
16.3.3.5.7	Deleted
16.3.3.5.8	Deleted
16.3.3.5.9	Deleted
16.3.4	Deleted
16.3.4.1	Deleted
16.3.4.2	Deleted
Chapter 17 Protection of Rack Storage of Plastic and Rubber Commodities	Various
17.1	Deleted
17.1.1	Deleted
17.1.1.1	Deleted
17.1.2	Deleted
17.1.2.1*	20.4.8
17.1.2.2	25.2.1.4
17.1.2.3	25.2.1.5
17.1.2.4	20.4.8.1
17.1.2.5	20.4.8.2
17.1.2.6	Deleted
17.1.2.7	22.1.8
17.1.2.8	Deleted
17.1.2.9	Deleted
17.1.2.9.1	Deleted
17.1.2.9.2	Deleted
17.1.2.9.3	25.8.1.4.5
17.1.2.9.3.1	25.8.1.4.4
17.1.2.9.3.2	Deleted
17.1.2.9.3.3	Deleted
17.1.2.9.3.4	25.8.1.4.1
17.1.2.9.4	25.8.1.5
17.1.2.9.4.1	25.8.1.6.1
17.1.2.9.4.2	Deleted
17.1.2.9.4.3	25.8.1.7.1
17.1.2.9.5	25.8.1.9
17.1.2.9.6	25.8.1.10
17.1.2.9.7	Deleted
17.1.3	Deleted
17.1.4	Deleted
17.1.4.1*	Deleted
17.1.4.2	Deleted
17.1.4.3	Deleted

2016 Edition Section Numbers	2019 Edition Section Numbers
17.1.5	Deleted
17.1.5.1	Deleted
17.1.5.2	Deleted
17.1.5.3	Deleted
17.1.5.4	Deleted
17.1.5.5	Deleted
17.1.5.6	Deleted
17.1.5.7	Deleted
17.1.5.8	Deleted
17.1.6	Deleted
17.1.7	Deleted
17.1.7.1	Deleted
17.1.7.2	Deleted
17.1.7.2.1	Deleted
17.1.7.3	Deleted
17.1.7.4	Merged Chap 25
17.1.7.4.1	Merged Chap 25
17.1.7.4.2	Merged Chap 25
17.1.7.4.3	25.5.1.10
17.1.8*	Deleted
17.1.8.1	Deleted
17.1.8.2	Deleted
17.1.9	Deleted
17.1.9.1	Deleted
17.1.9.2	Deleted
17.1.9.3	Deleted
17.1.10	Deleted
17.1.10.1	Deleted
17.1.10.1.1	Deleted
17.1.10.1.2	Deleted
17.2	Deleted
17.2.1	21.5
17.2.1.1	Deleted
17.2.1.1.1	Merged Chap 25
17.2.1.2	Merged Chap 25
17.2.1.2.1	21.5.1.1
17.2.1.2.2	21.5.1.2
17.2.1.2.3	21.5.1.3
17.2.1.2.4	21.5.1.4
17.2.1.3	21.5.2
17.2.1.4	21.5.3
17.2.1.5	Deleted
17.2.1.5.1	Deleted
17.2.1.5.2	Deleted
17.2.1.5.3	Deleted
17.2.1.5.4	25.6.4.2
17.2.1.5.5	Deleted
17.2.1.5.6	Merged Chap 25
17.2.1.5.7	Deleted
17.2.2	Deleted
17.2.2.1	22.5
17.2.2.1.1	Deleted
17.2.2.1.1.1	Deleted

2016 Edition Section Numbers	2019 Edition Section Numbers
17.2.2.2	Deleted
17.2.2.3	Deleted
17.2.2.3.1	Deleted
17.2.2.3.2	Deleted
17.2.2.4	Deleted
17.2.2.5	Deleted
17.2.2.6	Deleted
17.2.2.6.1	Deleted
17.2.2.6.2	Deleted
17.2.2.6.3	Deleted
17.2.2.6.4	25.5.2.3.2
17.2.2.6.5	Deleted
17.2.2.6.6	Deleted
17.2.2.6.7	Deleted
17.2.2.6.8	Deleted
17.2.3	23.6
17.2.3.1	23.6.1
17.2.3.1.1	Deleted
17.2.3.1.2	Deleted
17.2.3.1.2.1	Deleted
17.2.3.2	25.2.5.1.2
17.2.3.3	25.2.5.1.3
17.2.3.4	Deleted
17.2.3.4.1	Deleted
17.2.3.4.2	25.3.2
17.2.3.4.3	Deleted
17.2.3.4.4	Deleted
17.2.3.4.5	Deleted
17.2.3.4.6	Deleted
17.2.3.4.7	Deleted
17.2.3.4.8	Deleted
17.2.3.4.9	Deleted
17.2.3.5*	23.7*
17.2.3.5.1	23.7.1
17.2.3.5.2	23.7.2
17.2.3.5.3	23.7.3
17.2.3.5.4	23.7.4
17.2.3.5.5	23.7.5
17.2.3.5.6	23.7.6
17.2.3.5.7	23.7.7
17.2.3.5.8	23.7.8
17.2.3.5.8.1	23.7.8.1
17.2.3.5.8.2	23.7.8.2
17.2.3.5.8.3	23.7.8.3
17.2.3.5.8.4	23.7.8.4
17.2.4	Deleted
17.2.4.1	Deleted
17.2.4.1.1	Deleted
17.2.4.1.2	Deleted
17.3	Deleted
17.3.1	21.5.4
17.3.1.1	Merged Chap 25
17.3.1.2	Merged Chap 25
17.3.1.3	Merged Chap 25

EDUFIRE.IR

2016 Edition Section Numbers	2019 Edition Section Numbers
17.3.1.4	Merged Chap 25
17.3.1.5	Merged Chap 25
17.3.1.6	Merged Chap 25
17.3.1.7	Merged Chap 25
17.3.1.8	Merged Chap 25
17.3.1.9	Deleted
17.3.1.10*	Deleted
17.3.1.11	Deleted
17.3.1.12	Deleted
17.3.1.13	Deleted
17.3.1.14	Deleted
17.3.1.15	Deleted
17.3.1.16	Deleted
17.3.1.17	Deleted
17.3.2	Deleted
17.3.2.1	Deleted
17.3.2.1.1	Deleted
17.3.2.1.1.1	Deleted
17.3.2.2	Deleted
17.3.2.3	22.1.4.1
17.3.2.4	Deleted
17.3.2.5*	Deleted
17.3.3*	Deleted
17.3.3.1	Deleted
17.3.3.1.1	Deleted
17.3.3.1.1.1	Deleted
17.3.3.1.2	Deleted
17.3.3.2	Deleted
17.3.3.3	Deleted
17.3.3.4	Deleted
17.3.3.4.1	Deleted
17.3.3.4.2	Deleted
17.3.3.4.3	Deleted
17.3.3.4.4	Deleted
17.3.3.4.5*	Deleted
17.3.3.4.6	Deleted
17.3.3.4.7	Deleted
17.3.3.4.8	Deleted
17.3.3.4.9	Deleted
17.3.3.5*	Deleted
17.3.3.5.1	Deleted
17.3.3.5.2	Deleted
17.3.3.5.3	Deleted
17.3.3.5.4	Deleted
17.3.3.5.5	Deleted
17.3.3.5.6	Deleted
17.3.3.5.7	Deleted
17.3.3.5.8	Deleted
17.3.3.5.8.1	Deleted
17.3.3.5.8.2	Deleted
17.3.3.5.8.3	Deleted
17.3.3.5.8.4	Deleted
Chapter 18 Protection of Rubber Tire Storage	Various

2016 Edition Section Numbers	2019 Edition Section Numbers
18.1	Deleted
18.2	20.15.2
18.2.1	20.15.2.1
18.2.2	20.15.2.2
18.2.3	20.15.2.3
18.2.4	20.15.2.4
18.2.5	20.15.2.5
18.3	25.2.3.6.4
18.4*	21.6*
18.5	Deleted
18.5.1	Deleted
18.5.2	25.5.2.1.3
18.5.3	Deleted
18.5.4	Deleted
18.5.5	Deleted
18.6	20.9.2.5
Chapter 19 Protection of Roll Paper	Various
19.1*	Deleted
19.1.1	Deleted
19.1.1.2	20.5.5.2
19.1.1.3	20.5.5.2.1
19.1.1.4	20.5.5.3
19.1.1.5	20.5.5.4
19.1.1.6	20.5.5.5
19.1.2*	20.5.5.1*
19.1.2.1	21.7
19.1.2.1.1	21.7.1
19.1.2.1.2	21.7.2
19.1.2.1.3	21.7.3
19.1.2.1.4	21.7.4*
19.1.2.1.5	21.7.5
19.1.2.1.6	21.7.6
19.1.2.1.7	21.7.7
19.1.2.2	22.7
19.1.2.3	23.9
Chapter 20 Special Designs of Storage Protection	Various
20.1	Deleted
20.2	20.5.6
20.3*	21.9
20.3.1	21.9.1
20.3.2	21.9.2
20.3.3	21.9.3
20.3.4	21.9.4
20.3.5	21.9.5
20.3.6	21.9.6
20.3.7	23.11.1
20.4	Deleted
20.4.1	Deleted
20.4.1.1	20.12.2.7
20.4.1.2	20.12.2.7.1
20.4.2	21.10*
20.4.2.1	21.10.1

2016 Edition Section Numbers	2019 Edition Section Numbers
20.4.2.2	21.10.2
20.5	21.11
20.5.1	21.11.1
20.5.2	21.11.2
20.5.2.1	21.11.2.1
20.5.2.2	21.11.2.2
20.5.2.3	21.11.2.3
20.5.3	21.11.3
20.5.3.1	21.11.3.1
20.5.3.2	21.11.3.2
20.5.4	21.11.4
20.5.4.1	21.11.4.1
20.5.5	21.11.5
20.5.6	21.11.6
20.5.6.1	21.11.6.1
20.5.6.2	21.11.6.2
20.5.6.2.1	21.11.6.2.1
20.5.6.3	21.11.6.3
20.5.6.3.1	21.11.6.3.1
20.5.6.3.2	21.11.6.3.2
20.5.6.3.3	21.11.6.3.3
20.5.6.3.4	21.11.6.3.4
20.5.6.3.5*	21.11.6.3.5*
20.5.6.4	21.11.6.4
20.5.6.4.1	21.11.6.4.1
20.5.6.4.2	21.11.6.4.2
20.5.6.4.3	21.11.6.4.3.1
20.5.6.4.3.1	21.11.6.4.3
20.5.6.4.4	21.11.6.4.4
20.5.6.4.5	21.11.6.4.5
20.5.6.5	21.11.6.5
20.5.6.5.1	21.11.6.5.1
20.5.6.5.2	21.11.6.5.2
20.6	21.12
20.6.1*	21.12.1*
20.6.2	21.12.2
20.6.3	21.12.3
20.6.4	21.12.4
20.6.5*	21.12.5*
20.6.6	21.12.6
20.6.6.1	21.12.6.1
20.6.6.2	21.12.6.2
20.7	23.12
20.7.1*	23.12.1*
20.7.2	23.12.2
20.7.3	23.12.3
Chapter 21 Alternative Sprinkler System Designs for Chapters 12 Through 20	**Chapter 24 Alternative Sprinkler System Designs for Chapters 20 Through 25**
21.1*	24.1*
21.1.1	24.1.1
21.1.2	24.1.2

EDUFIRE.IR

2016 Edition Section Numbers	2019 Edition Section Numbers
21.1.2.1	24.1.2.1
21.1.2.1.1	24.1.2.1.1
21.1.2.2	24.1.2.2
21.1.2.2.1	24.1.2.2.1
21.1.3	24.1.3
21.1.4	24.1.4
21.1.5	24.1.5
21.1.6	24.1.6
21.1.7	24.1.7
21.1.8	24.1.8
21.1.8.1	24.1.8.1
21.1.8.2	24.1.8.2
21.1.8.3	24.1.8.3
21.1.9	24.1.9
21.2*	24.2*
21.2.1	24.2.1
21.3*	24.3*
21.3.1	24.3.1
21.3.2	24.3.2
21.3.3	24.3.3
21.4	24.4
21.4.1	24.4.1
21.4.1.1	24.4.1.1
21.5	24.5
21.5.1	24.5.1
21.5.2	24.5.2
21.5.2.1	24.5.2.1
21.5.2.2	24.5.2.2
21.5.2.2.1	24.5.2.2.1
21.5.2.2.2	24.5.2.2.2
21.5.3	24.5.3
21.5.3.1	24.5.3.1
21.5.3.2	24.5.3.2
21.5.3.2.1	24.5.3.2.1
21.5.3.2.2	24.5.3.2.2
21.5.3.2.3	24.5.3.2.3
Chapter 22 Special Occupancy Requirements	**Chapter 26 Special Occupancy Requirements**
22.1	26.1
22.1.1	26.1.1
22.1.1.1	26.1.1.1
22.1.1.1.1	26.1.1.1.1
22.1.1.2	26.1.1.2
22.1.2	26.1.2
22.2	26.2
22.2.1	26.2.1
22.2.2	26.2.2
22.3	26.3
22.3.1	26.3.1
22.3.2	26.3.2
22.4	26.4

2016 Edition Section Numbers	2019 Edition Section Numbers
22.4.1	26.4.1
22.4.1.1*	26.4.1.1*
22.4.1.2	26.4.1.2
22.4.1.3	26.4.1.4
22.4.1.4	26.4.1.5
22.4.1.5	26.4.1.6
22.4.1.6	26.4.1.7
22.4.2	26.4.2
22.4.2.1*	26.4.2.1*
22.4.2.1.1	26.4.2.1.1
22.4.2.1.2	26.4.2.1.2
22.4.2.2	26.4.2.2
22.5	26.5
22.5.1*	26.5.1*
22.5.2	26.5.2
22.6	26.6
22.6.1*	26.6.1*
22.6.2	26.6.2
22.6.2.1	26.6.2.1
22.6.2.2	26.6.2.2
22.6.2.3	26.6.2.3
22.7	26.7
22.7.1	26.7.1
22.7.1.1	26.7.1.1
22.7.1.2	26.7.1.2
22.7.1.3*	26.7.1.3*
22.7.1.4	26.7.1.4
22.7.1.4.1	26.7.1.4.1
22.7.1.4.2	26.7.1.4.2
22.7.1.4.3	26.7.1.4.3
22.7.1.4.4*	26.7.1.4.4*
22.7.1.4.5	26.7.1.4.5
22.7.1.4.6*	26.7.1.4.6*
22.7.1.4.7	26.7.1.4.7
22.7.1.4.8	26.7.1.4.8
22.7.1.4.9	26.7.1.4.9
22.7.2	26.7.2
22.7.2.1	26.7.2.1
22.7.2.2	26.7.2.2
22.7.2.2.1	26.7.2.2.1
22.7.2.2.2	26.7.2.2.2
22.7.2.3	26.7.2.3
22.8	26.8
22.8.1	26.8.1
22.8.2	26.8.2
22.9	26.9
22.9.1	26.9.1
22.9.1.1	26.9.1.1
22.9.1.1.1	26.9.1.1.1
22.9.1.2	26.9.1.2
22.9.1.3	26.9.1.3
22.9.1.4	26.9.1.4
22.9.1.5	26.9.1.5
22.9.2	26.9.2

2016 Edition Section Numbers	2019 Edition Section Numbers
22.9.2.1	26.9.2.1
22.9.2.2	26.9.2.2
22.10	26.10
22.10.1	26.10.1
22.10.1.1	26.10.1.1
22.10.1.2	26.10.1.2
22.10.2	26.10.2
22.11	26.11
22.11.1	26.11.1
22.11.1.1	26.11.1.1
22.11.1.2	26.11.1.2
22.11.2	26.11.2
22.12	26.12
22.12.1	26.12.1
22.12.1.1	26.12.1.1
22.12.1.2	26.12.1.2
22.12.1.3	26.12.1.3
22.12.2	26.12.2
22.13	26.13
22.13.1	26.13.1
22.13.2	26.13.2
22.14	26.14
22.14.1	26.14.1
22.14.2	26.14.2
22.14.2.1*	26.14.2.1
22.14.2.2	26.14.2.2
22.14.2.3*	26.14.2.4*
22.15	26.15
22.15.1	26.15.1
22.15.2	26.15.2
22.15.2.1	26.15.2.1
22.15.2.2*	26.15.2.2*
22.15.2.2.1	26.15.2.2.1
22.15.2.2.1.1	26.15.2.2.1.1
22.15.2.2.1.2	26.15.2.2.1.2
22.15.2.2.1.3	26.15.2.2.1.3
22.15.2.2.1.4	26.15.2.2.1.4
22.15.2.2.1.5	26.15.2.2.1.5
22.15.2.2.1.6	26.15.2.2.1.6
22.15.2.2.2	26.15.2.2.2
22.15.2.2.2.1	26.15.2.2.2.1
22.15.2.2.2.2	26.15.2.2.2.2
22.15.2.2.2.3	26.15.2.2.2.3
22.15.2.2.3	26.15.2.2.3
22.15.2.2.3.1	26.15.2.2.3.1
22.15.2.2.3.2	26.15.2.2.3.2
22.15.2.3	26.15.2.3
22.15.2.3.1	26.15.2.3.1
22.15.2.3.2	26.15.2.3.2
22.15.2.4	26.15.2.4
22.15.2.4.1	26.15.2.4.1
22.15.2.4.2	26.15.2.4.2
22.15.2.4.3	26.15.2.4.3
22.15.2.4.4	26.15.2.4.4

EDUFIRE.IR

2016 Edition Section Numbers	2019 Edition Section Numbers
22.15.2.4.5	26.15.2.4.5
22.15.2.5	26.15.2.5
22.15.2.6	26.15.2.6
22.16	26.16
22.16.1	26.16.1
22.16.2	26.16.2
22.16.2.1*	26.16.2.1*
22.16.2.2	26.16.2.2
22.16.2.3	26.16.2.3
22.16.2.4	26.16.2.4
22.16.2.5	26.16.2.5
22.16.2.6*	26.16.2.6*
22.17	26.17
22.17.1	26.17.1
22.17.1.1	26.17.1.1
22.17.1.2	26.17.1.2
22.17.1.3	26.17.1.3
22.17.1.4	26.17.1.4
22.17.1.5*	26.17.1.5*
22.17.1.6	26.17.1.6
22.17.1.7	26.17.1.7
22.17.1.8*	26.17.1.8*
22.17.1.9	26.17.1.9
22.17.1.10	26.17.1.10
22.17.1.11	26.17.1.11
22.17.2	26.17.2
22.18	26.18
22.18.1	26.18.1
22.18.1.1	26.18.1.1
22.18.2	26.18.2
22.18.2.1	26.18.2.1
22.18.2.2	26.18.2.2
22.18.2.3	26.18.2.3
22.18.2.4	26.18.2.4
22.19	26.19
22.19.1	26.19.1
22.19.2	26.19.2
22.19.2.1	26.19.2.1
22.19.2.2	26.19.2.2
22.19.2.3	26.19.2.3
22.19.2.4*	26.19.2.4*
22.19.2.5*	26.19.2.5*
22.20	26.20
22.20.1	26.20.1
22.20.1.1	26.20.1.1
22.20.2	26.20.2
22.20.2.1	26.20.2.1
22.21	26.21
22.21.1	26.21.1
22.21.1.1	26.21.1.1
22.21.1.1.1*	26.21.1.1.1*
22.21.1.1.2*	26.21.1.1.2*
22.21.1.2	26.21.1.2
22.21.1.2.1	26.21.1.2.1

2016 Edition Section Numbers	2019 Edition Section Numbers
22.21.1.2.2	26.21.1.2.2
22.21.1.2.3	26.21.1.2.3
22.21.1.3	26.21.1.3
22.21.1.3.1	26.21.1.3.1
22.21.1.3.2	26.21.1.3.2
22.21.1.4	26.21.1.4
22.21.1.5*	26.21.1.5*
22.21.1.5.1	26.21.1.5.1
22.21.1.6	26.21.1.6
22.21.1.6.1	26.21.1.6.1
22.21.1.6.2	26.21.1.6.2
22.21.1.6.2.1	26.21.1.6.2.1
22.21.1.6.2.2	26.21.1.6.2.2
22.21.1.7	26.21.1.7
22.21.1.7.1	26.21.1.7.1
22.21.1.7.1.1*	26.21.1.7.1.1*
22.21.1.7.1.2	26.21.1.7.1.2
22.21.1.7.1.3*	26.21.1.7.1.3*
22.21.1.7.2	26.21.1.7.2
22.21.1.7.2.1*	26.21.1.7.2.1*
22.21.1.7.2.2*	26.21.1.7.2.2*
22.21.1.7.3	26.21.1.7.3
22.21.1.7.4	26.21.1.7.4
22.21.2	26.21.2
22.21.2.1*	26.21.2.1*
22.21.2.1.1	26.21.2.1.1
22.21.2.1.2	26.21.2.1.2
22.21.2.1.3	26.21.2.1.3
22.21.2.2*	26.21.2.2*
22.21.2.2.1	26.21.2.2.1
22.21.2.2.2	26.21.2.2.2
22.21.2.2.3	26.21.2.2.3
22.21.2.2.4	26.21.2.2.4
22.21.2.2.5	26.21.2.2.5
22.21.2.2.6	26.21.2.2.6
22.21.2.3*	26.21.2.3*
22.21.2.4*	26.21.2.4*
22.21.2.5	26.21.2.5
22.21.2.5.1	26.21.2.5.1
22.21.2.5.2	26.21.2.5.2
22.21.2.5.2.1	26.21.2.5.2.1
22.21.2.5.2.2	26.21.2.5.2.2
22.21.2.6	26.21.2.6
22.21.2.7	26.21.2.7
22.21.2.7.1	26.21.2.7.1
22.21.2.7.1.1	26.21.2.7.1.1
22.21.2.7.2	26.21.2.7.2
22.21.2.7.2.1	26.21.2.7.2.1
22.21.2.7.2.2	26.21.2.7.2.2
22.21.2.7.3	26.21.2.7.3
22.21.2.7.4	26.21.2.7.4
22.21.2.8	26.21.2.8
22.21.2.8.1	26.21.2.8.1
22.21.2.8.2	26.21.2.8.2

2016 Edition Section Numbers	2019 Edition Section Numbers
22.21.2.8.3	26.21.2.8.3
22.21.2.8.4	26.21.2.8.4
22.21.2.9	26.21.2.9
22.21.2.9.1	26.21.2.9.1
22.21.2.9.1.1	26.21.2.9.1.1
22.21.2.9.1.2	26.21.2.9.1.2
22.21.2.9.2*	26.21.2.9.2*
22.21.2.9.3*	26.21.2.9.3*
22.21.2.9.3.1	26.21.2.9.3.1
22.21.2.9.3.2	26.21.2.9.3.2
22.22	26.22
22.22.1	26.22.1
22.22.1.1*	26.22.1.1*
22.22.1.2	26.22.1.2
22.22.1.3	26.22.1.3
22.22.1.4	26.22.1.4
22.22.2	26.22.2
22.22.2.1	26.22.2.1
22.22.2.1.1	26.22.2.1.1
22.22.2.1.2	26.22.2.1.2*
22.23	26.23
22.23.1	26.23.1
22.23.1.1*	26.23.1.1*
22.23.1.2	26.23.1.2
22.23.1.3*	26.23.1.3*
22.23.1.3.1*	26.23.1.3.1*
22.23.2	26.23.2
22.23.2.1*	26.23.2.1*
22.23.2.2*	26.23.2.2*
22.23.2.3*	26.23.2.3*
22.23.2.4	26.23.2.4
22.23.2.5	26.23.2.5
22.24	26.24
22.24.1	26.24.1
22.24.2	26.24.2
22.25	26.25
22.25.1	26.25.1
22.25.1.1	26.25.1.1
22.25.1.2*	26.25.1.2*
22.25.1.3	26.25.1.3
22.25.1.4	26.25.1.4
22.25.1.4.1	26.25.1.4.1
22.25.2	26.25.2
22.26	26.26
22.26.1	26.26.1
22.26.1.1*	26.26.1.1*
22.26.1.2	26.26.1.2
22.26.1.2.1	26.26.1.2.1
22.26.1.2.2	26.26.1.2.2
22.26.2	26.26.2
22.27	26.27
22.27.1	26.27.1
22.27.1.1*	26.27.1.1*
22.27.1.2	26.27.1.2

EDUFIRE.IR

2016 Edition Section Numbers	2019 Edition Section Numbers
22.27.1.3	26.27.1.3
22.27.1.4	26.27.1.4
22.27.1.4.1	26.27.1.4.1
22.27.1.4.2	26.27.1.4.2
22.27.1.5*	26.27.1.5*
22.27.1.6*	26.27.1.6*
22.27.1.6.1	26.27.1.6.1
22.27.1.6.2	26.27.1.6.2
22.27.1.7	26.27.1.7
22.27.1.8	26.27.1.8
22.27.1.9	26.27.1.9
22.27.2	26.27.2
22.27.2.1	26.27.2.1
22.27.2.1.1	26.27.2.1.1
22.27.2.1.2*	26.27.2.1.2*
22.27.2.1.3	26.27.2.1.3
22.27.2.2	26.27.2.2
22.27.2.3	26.27.2.3
22.27.2.4	26.27.2.4
22.28	26.28
22.28.1	26.28.1
22.28.2	26.28.2
22.28.2.1	26.28.2.1
22.28.2.2	26.28.2.2
22.30	26.29
22.30.1	26.29.1
22.30.1.1*	26.29.1.1*
22.30.1.2*	26.29.1.2*
22.30.1.3	26.29.1.3
22.30.1.3.1	26.29.1.3.1*
22.30.1.3.2*	26.29.1.3.2*
22.30.1.3.3	26.29.1.3.3
22.30.1.3.4	26.29.1.3.4
22.30.1.3.5	26.29.1.3.5
22.30.1.3.6	26.29.1.3.6
22.30.2	26.29.2
22.30.2.1*	26.29.2.1*
22.30.2.2*	26.29.2.2*
22.30.2.3*	26.29.2.3*
22.31	26.30
22.31.1	26.30.1
22.31.2	26.30.2
22.31.2.1	26.30.2.1
22.31.2.2	26.30.2.2
22.31.2.3	26.30.2.3
22.32	26.31
22.32.1	26.31.1
22.32.2	26.31.2
22.32.2.1	26.31.2.1
22.33	26.32
22.33.1	26.32.1
22.33.1.1	26.32.1.1
22.33.1.2	26.32.1.2
22.33.2	26.32.2

2016 Edition Section Numbers	2019 Edition Section Numbers
22.34	26.33
22.34.1	26.33.1
22.34.1.1	26.33.1.1
22.34.1.2	26.33.1.2
22.34.1.3	26.33.1.3
22.34.1.4	26.33.1.4
22.34.1.5	26.33.1.5
22.34.1.6	26.33.1.6
22.34.1.7	26.33.1.7
22.34.1.8	26.33.1.8
22.34.1.9	26.33.1.9
22.34.1.10	26.33.1.10
22.34.1.11	26.33.1.11*
22.34.1.12	26.33.1.12
22.34.1.13	26.33.1.13
22.34.1.14	26.33.1.14
22.34.1.15	26.33.1.15
22.34.1.16	26.33.1.16
22.34.1.17	26.33.1.17
22.34.2	26.33.2
22.35	26.34
22.35.1	26.34.1
22.35.1.1	26.34.1.1
22.35.1.1.1*	26.34.1.1.1*
22.35.1.2	26.34.1.2
22.35.1.2.1	26.34.1.2.1
22.35.1.3	26.34.1.3
22.35.1.3.2	26.34.1.3.2
22.35.1.3.5	26.34.1.3.3
22.35.2	26.34.2
22.35.2.1	26.34.2.1
22.35.2.1.1	26.34.2.1.1
22.35.2.1.2	26.34.2.1.2
22.35.2.1.3	26.34.2.1.3
22.36	26.35
22.36.1	26.35.1
22.36.1.1	26.35.1.1
22.36.1.1.1	26.35.1.1.1
22.36.1.1.2	26.35.1.1.2
26.35.1.2*	26.35.1.2*
22.36.1.3	26.35.1.3
22.36.1.3.1	26.35.1.3.1
22.36.1.3.2*	26.35.1.3.2*
22.36.1.3.3*	26.35.1.3.3*
22.36.1.3.4*	26.35.1.3.4*
22.36.1.3.5	26.35.1.3.5
22.36.1.3.6	26.35.1.3.6
22.36.1.3.7	26.35.1.3.7
22.36.1.3.8	26.35.1.3.8
22.36.1.3.9	26.35.1.3.9
22.36.2	26.35.2
22.37	26.36
22.37.1	26.36.1
22.37.1.1	26.36.1.1

2016 Edition Section Numbers	2019 Edition Section Numbers
22.37.1.2	26.36.1.2
22.37.1.2.1	26.36.1.2.1
22.37.1.2.2	26.36.1.2.2
22.37.1.2.3	26.36.1.2.3
22.37.1.3	26.36.1.3
22.37.1.3.1	26.36.1.3.1
22.37.1.3.2	26.36.1.3.2
22.37.1.3.3	26.36.1.3.3
22.37.1.3.4	26.36.1.3.4
22.37.1.3.4.1	26.36.1.3.4.1
22.37.1.3.4.2	26.36.1.3.4.2
22.37.1.3.4.3	26.36.1.3.4.3
22.37.1.3.4.4	26.36.1.3.4.4
22.37.1.3.4.5	26.36.1.3.4.5
22.37.2	26.36.2
Chapter 23 Plans and Calculations	**Chapter 27 Plans and Calculations**
23.1*	27.1*
23.1.1	27.1.1*
23.1.3	27.1.3
23.1.4*	27.1.4
23.1.5*	27.1.5*
23.1.5.1	27.1.5.1
23.1.5.2	27.1.5.2
23.2	4.6
23.2.1	4.6.1
23.2.1.1	4.6.1.1*
23.2.2	4.6.2
23.3	27.4
23.3.1	27.4.1
23.3.2*	27.4.2*
23.3.3*	27.4.3*
23.3.4*	27.4.4*
23.3.5	27.4.5
23.3.5.1*	27.4.5.1*
23.3.5.1.1	27.4.5.1.1
23.3.5.1.2	27.4.5.1.2
23.3.5.2	27.4.5.2
23.3.5.3	27.4.5.3
23.3.5.4	27.4.5.4
23.3.5.5	27.4.5.5
23.3.5.6	27.4.5.6
23.4	27.2
23.4.1*	27.2.1*
23.4.1.1	27.2.1.1
23.4.1.2	27.2.1.2
23.4.1.3	27.2.1.3
23.4.1.4*	27.2.1.4*
23.4.1.5	27.2.1.5
23.4.1.6	27.2.1.6
23.4.2	27.2.2
23.4.2.1	27.2.2.1
23.4.2.1.1	27.2.2.1.1
23.4.2.1.2	27.2.2.1.2

EDUFIRE.IR

2016 Edition Section Numbers	2019 Edition Section Numbers
23.4.2.1.3	27.2.2.1.3
23.4.2.2	27.2.2.2
23.4.2.3	27.2.2.3
23.4.2.4	27.2.2.4
23.4.2.4.1	27.2.2.4.1
23.4.2.4.2	27.2.2.4.2
23.4.2.4.3	27.2.2.4.3
23.4.2.5	27.2.2.5
23.4.3	27.2.3
23.4.3.1	27.2.3.1
23.4.3.1.1	27.2.3.1.1
23.4.3.1.2	27.2.3.1.2
23.4.3.1.3	27.2.3.1.3
23.4.3.1.3.1	27.2.3.1.3.1
23.4.3.1.3.2	27.2.3.1.3.2
23.4.3.2	27.2.3.2
23.4.3.2.1	27.2.3.2.1
23.4.3.3	27.2.3.3
23.4.3.4	27.2.3.5
23.4.4*	27.2.4*
23.4.4.1*	27.2.4.1*
23.4.4.1.1	27.2.4.1.1
23.4.4.2	27.2.4.2
23.4.4.2.1*	27.2.4.2.1*
23.4.4.2.2	27.2.4.2.2
23.4.4.2.3	27.2.4.2.3
23.4.4.2.4*	27.2.4.2.4*
23.4.4.2.5	27.2.4.2.5
23.4.4.3	27.2.4.3
23.4.4.3.1	27.2.4.3.1
23.4.4.3.2	27.2.4.3.2
23.4.4.3.3	27.2.4.3.3
23.4.4.4	27.2.4.4
23.4.4.5*	27.2.4.5*
23.4.4.5.1	27.2.4.5.1
23.4.4.5.2	27.2.4.5.2
23.4.4.5.3	27.2.4.5.3
23.4.4.6	27.2.4.6
23.4.4.6.1*	27.2.4.6.1*
23.4.4.6.2*	27.2.4.6.2*
23.4.4.6.3	27.2.4.6.3
23.4.4.6.4	27.2.4.6.4
23.4.4.6.5*	27.2.4.6.5*
23.4.4.7*	27.2.4.7*
23.4.4.7.1	27.2.4.7.1
23.4.4.7.1.1	27.2.4.7.1.1
23.4.4.7.2*	27.2.4.7.2*
23.4.4.7.2.1	27.2.4.7.2.1
23.4.4.7.2.2	27.2.4.7.2.2
23.4.4.7.3	27.2.4.7.3
23.4.4.7.3.1	27.2.4.7.3.1
23.4.4.7.3.2	27.2.4.7.3.2
23.4.4.7.4	27.2.4.7.4
23.4.4.7.5	27.2.4.7.5

2016 Edition Section Numbers	2019 Edition Section Numbers
23.4.4.7.6	27.2.4.7.6
23.4.4.7.7	27.2.4.7.7
23.4.4.8	27.2.4.8
23.4.4.8.1	27.2.4.8.1
23.4.4.8.2*	27.2.4.8.2*
23.4.4.9*	27.2.4.9*
23.4.4.9.1	27.2.4.9.1
23.4.4.9.2	27.2.4.9.2
23.4.4.9.3	27.2.4.9.3
23.4.4.9.4	27.2.4.9.4
23.4.4.10*	27.2.4.10*
23.4.4.10.1	27.2.4.10.1
23.4.4.10.2	27.2.4.10.2
23.4.4.10.3	27.2.4.10.3
23.4.4.11	27.2.4.11
23.4.4.11.1	27.2.4.11.1
23.4.4.11.2	27.2.4.11.2
23.4.4.12	27.2.4.12
23.4.5	27.2.5
23.4.5.1	27.2.5.1
23.4.5.2	27.2.5.2
23.4.6	27.3
23.5	19.5
23.6*	8.7.9*
23.6.1	8.7.9.1
23.6.2	8.7.9.2
23.6.3	8.7.9.3
23.6.4	8.7.9.4
23.6.5	8.7.9.5
23.6.6	8.7.9.6
23.6.7	8.7.9.7
23.6.7.1	8.7.9.7.1
23.6.7.2	8.7.9.7.2
23.7	27.5
23.7.1*	27.5.1*
23.7.1.1	27.5.1.1
23.7.1.2	27.5.1.2
23.7.1.3	27.5.1.3
23.7.1.4*	27.5.1.4*
23.7.1.5	27.5.1.5
23.7.1.6	27.5.1.6
23.7.2	27.5.2
23.7.2.1	27.5.2.1
23.7.2.1.1	27.5.2.1.1
23.7.2.1.2	27.5.2.1.2
23.7.2.1.3	27.5.2.1.3
23.7.2.2	27.5.2.2
23.7.2.2.1	27.5.2.2.1
23.7.2.2.2	27.5.2.2.2
23.7.2.3	27.5.2.3
23.7.2.4	27.5.2.4
23.7.2.5	27.5.2.5
23.7.2.6*	27.5.2.6*
23.7.3	27.5.3

2016 Edition Section Numbers	2019 Edition Section Numbers
23.7.3.1	27.5.3.1
23.7.3.2	27.5.3.2
23.7.3.3	27.5.3.3
23.7.3.4	27.5.3.4
23.7.3.5	27.5.3.5
23.7.3.6	27.5.3.6
23.7.3.7	27.5.3.7
23.7.3.8	27.5.3.8
23.7.3.9*	27.5.3.9*
23.7.3.10	27.5.3.10
23.7.4*	27.5.4*
Chapter 24 Water Supplies	**Chapter 5 Water Supplies**
24.1	5.1
24.1.1	5.1.1
24.1.2	5.1.2
24.1.3*	5.1.3*
24.1.3.1	5.1.3.1
24.1.3.2	5.1.3.2
24.1.3.3	5.1.3.3
24.1.4	5.1.4
24.1.5*	5.1.5*
24.1.5.1	5.1.5.1
24.1.5.2	5.1.5.2
24.1.5.3	5.1.5.3
24.1.6	5.1.6
24.1.6.1	5.1.6.1
24.1.6.1.1	5.1.6.1.1
24.1.6.1.2	5.1.6.1.2
24.1.6.2*	5.1.6.2*
24.1.7*	5.1.7*
24.1.8*	5.1.8*
24.1.8.1	5.1.8.1
24.1.8.2	5.1.8.2
24.2	5.2
24.2.1*	5.2.1*
24.2.2*	5.2.2*
24.2.2.1	5.2.2.1
24.2.2.2*	5.2.2.2
24.2.3*	5.2.3*
24.2.4	5.2.4
24.2.4.1	5.2.4.1
24.2.4.1.1	5.2.4.1.1
24.2.4.1.2	5.2.4.1.2
24.2.4.1.3	5.2.4.1.3
24.2.4.1.4	5.2.4.1.4
24.2.4.2	5.2.4.2
24.2.4.2.1	5.2.4.2.1
24.2.4.2.2	5.2.4.2.2
24.2.4.3*	5.2.4.3*
24.2.4.3.1	5.2.4.3.1
24.2.4.3.2	5.2.4.3.2

EDUFIRE.IR

2016 Edition Section Numbers	2019 Edition Section Numbers
24.2.5	5.2.5
24.2.6	5.2.6
Chapter 25 Systems Acceptance	**Chapter 28 Systems Acceptance**
25.1	28.1
25.2	28.2
25.2.1*	28.2.1*
25.2.1.1	28.2.1.1
25.2.1.2	28.2.1.3
25.2.1.3	28.2.1.4
25.2.1.5*	28.2.1.5*
25.2.1.6*	28.2.1.6*
25.2.1.7	28.2.1.7
25.2.1.8*	28.2.1.8*
25.2.1.9	28.2.1.9
25.2.1.10	28.2.1.10
25.2.1.11*	28.2.1.11*
25.2.1.11.1	28.2.1.11.1
25.2.1.11.1	28.2.1.11.2
25.2.1.12	28.2.1.12
25.2.2	28.2.2
25.2.2.1	28.2.2.1
25.2.2.2	28.2.2.2
25.2.3	28.2.3
25.2.3.1	28.2.3.1
25.2.3.2*	28.2.3.2*
25.2.3.2.1	28.2.3.2.1
25.2.3.2.2	28.2.3.2.2
25.2.3.2.3*	28.2.3.2.3*
25.2.3.2.3.1*	28.2.3.2.3.1*
25.2.3.2.4	28.2.3.2.4
25.2.3.3	28.2.3.3
25.2.3.3.1	28.2.3.3.1
25.2.3.3.2	28.2.3.3.2
25.2.3.4	28.2.3.4
25.2.3.4.1	28.2.3.4.1
25.2.3.4.2*	28.2.3.4.2*
25.2.3.5	28.2.3.5
25.2.4	28.2.4
25.2.4.1	28.2.4.1
25.2.4.2	28.2.4.2
25.2.4.3	28.2.4.3
25.2.4.4	28.2.4.4
25.2.5	28.2.5
25.2.5.1	28.2.5.1
25.2.5.2	28.2.5.2
25.2.6	28.2.6
25.4	28.4
25.5*	28.5*
25.5.1	28.5.1
25.5.1	28.5.2
25.5.2	28.5.3
25.6*	28.6*

2016 Edition Section Numbers	2019 Edition Section Numbers
25.6.1	28.6.1
25.6.1.1	28.6.1.1
25.6.1.2	28.6.1.2
25.6.2	28.6.2
Chapter 26 Marine Systems	**Chapter 30 Marine Systems**
26.1	30.1
26.1.1	30.1.1
26.1.2	30.1.2
26.1.4*	30.1.3*
26.1.5*	30.1.4*
26.1.5.1	30.1.4.1
26.1.5.2	30.1.4.2
26.1.5.3	30.1.4.3
26.2	30.2
26.2.1*	30.2.1*
26.2.2*	30.2.2*
26.2.3	30.2.3
26.2.3.1	30.2.3.1
26.2.3.2	30.2.3.2
26.2.3.3	30.2.3.3
26.2.3.4	30.2.3.4
26.2.4	30.2.4
26.2.4.1*	30.2.4.1*
26.2.4.2	30.2.4.2
26.2.5	30.2.5
26.2.5.1*	30.2.5.1*
26.2.5.2	30.2.5.2
26.2.5.3*	30.2.5.3*
26.2.5.4*	30.2.5.4*
26.2.6	30.2.6
26.2.6.1*	30.2.6.1*
26.2.6.2	30.2.6.2
26.2.6.3	30.2.6.3
26.2.7	30.2.7
26.2.7.1*	30.2.7.1*
26.2.7.2	30.2.7.2
26.2.7.3	30.2.7.3
26.2.7.4	30.2.7.4
26.2.7.5	30.2.7.5
26.2.7.6	30.2.7.6
26.2.7.7*	30.2.7.7*
26.2.7.8	30.2.7.8
26.3	30.3
26.3.1*	30.3.1*
26.3.2	30.3.2
26.3.3	30.3.3
26.3.4	30.3.4
26.4	30.4
26.4.1	30.4.1
26.4.2*	30.4.2*
26.4.3	30.4.3
26.4.4*	30.4.4*
26.4.4.1	30.4.4.1

2016 Edition Section Numbers	2019 Edition Section Numbers
26.4.4.2	30.4.4.2
26.4.5	30.4.5
26.4.5.1	30.4.5.1
26.4.5.2	30.4.5.2
26.4.6	30.4.6
26.4.7	30.4.7
26.4.8	30.4.8
26.4.8.1	30.4.8.1
26.4.8.2	30.4.8.2
26.4.8.3	30.4.8.3
26.4.9	30.4.9
26.4.10	30.4.10
26.4.10.1	30.4.10.1
26.4.10.2	30.4.10.2
26.4.10.3	30.4.10.3
26.4.11	30.4.11
26.4.11.1	30.4.11.1
26.4.11.2	30.4.11.2
26.4.11.3	30.4.11.3
26.4.11.4	30.4.11.4
26.4.12	30.4.12
26.4.12.1*	30.4.12.1*
26.4.12.2	30.4.12.2
26.4.12.3	30.4.12.3
26.4.12.4	30.4.12.4
26.4.12.5	30.4.12.5
26.4.12.6	30.4.12.6
26.4.12.7	30.4.12.7
26.4.12.8	30.4.12.8
26.4.13	30.4.13
26.4.14	30.4.14
26.5	30.5
26.5.1	30.5.1
26.5.1.1	30.5.1.1
26.5.1.2	30.5.1.2
26.5.2*	30.5.2*
26.5.3*	30.5.3*
26.6	30.6
26.6.1	30.6.1
26.6.2	30.6.2
26.6.3	30.6.3
26.6.4*	30.6.4*
26.7	30.7
26.7.1	30.7.1
26.7.2	30.7.2
26.7.2.1	30.7.2.1
26.7.2.2	30.7.2.2
26.7.2.3	30.7.2.3
26.7.2.3.1	30.7.2.3.1
26.7.2.3.2	30.7.2.3.2
26.7.2.4	30.7.2.4
26.7.2.4.1	30.7.2.4.1
26.7.2.4.2	30.7.2.4.2
26.7.2.4.3	30.7.2.4.3

EDUFIRE.IR

2016 Edition Section Numbers	2019 Edition Section Numbers
26.7.2.4.4	30.7.2.4.4
26.7.2.4.5	30.7.2.4.5
26.7.2.5	30.7.2.5
26.7.2.5.1	30.7.2.5.1
26.7.2.5.2	30.7.2.5.2
26.7.2.6	30.7.2.6
26.7.2.7*	30.7.2.7*
26.7.3	30.7.3
26.7.3.1	30.7.3.1
26.7.3.2	30.7.3.2
26.7.3.3*	30.7.3.3*
26.7.3.4	30.7.3.4
26.7.3.5	30.7.3.5
26.7.3.6	30.7.3.6
26.7.3.7	30.7.3.7
26.7.3.8	30.7.3.8
26.7.3.9	30.7.3.9

2016 Edition Section Numbers	2019 Edition Section Numbers
26.7.3.10	30.7.3.10
26.7.3.11	30.7.3.11
26.7.3.11.1	30.7.3.11.1
26.7.3.11.2	30.7.3.11.2
26.7.3.12	30.7.3.12
26.7.3.12.1	30.7.3.12.1
26.7.3.12.2	30.7.3.12.2
26.7.3.13*	30.7.3.13*
26.7.4	30.7.4
26.7.4.1	30.7.4.1
26.7.4.2	30.7.4.2
26.7.4.3	30.7.4.3
26.7.4.4	30.7.4.4
26.7.4.5	30.7.4.5
26.7.4.6*	30.7.4.6*
26.7.4.7	30.7.4.7
26.7.4.8	30.7.4.8

2016 Edition Section Numbers	2019 Edition Section Numbers
26.8	30.8
26.8.1	30.8.1
26.8.2	30.8.2
26.8.3	30.8.3
26.8.3.1	30.8.3.1
26.8.3.2	30.8.3.2
26.9	30.9
26.9.1	30.9.1
26.9.2	30.9.2
Chapter 27 System Inspection, Testing, and Maintenance	Various
27.1*	30.1*
27.2.1	29.2.2
27.2.2	29.2.3
27.2.3	29.2.4

EDUFIRE.IR

IMPORTANT NOTICES AND DISCLAIMERS CONCERNING NFPA® STANDARDS

NOTICE AND DISCLAIMER OF LIABILITY CONCERNING THE USE OF NFPA STANDARDS

NFPA® codes, standards, recommended practices, and guides ("NFPA Standards"), of which the document contained herein is one, are developed through a consensus standards development process approved by the American National Standards Institute. This process brings together volunteers representing varied viewpoints and interests to achieve consensus on fire and other safety issues. While the NFPA administers the process and establishes rules to promote fairness in the development of consensus, it does not independently test, evaluate, or verify the accuracy of any information or the soundness of any judgments contained in NFPA Standards.

The NFPA disclaims liability for any personal injury, property or other damages of any nature whatsoever, whether special, indirect, consequential or compensatory, directly or indirectly resulting from the publication, use of, or reliance on NFPA Standards. The NFPA also makes no guaranty or warranty as to the accuracy or completeness of any information published herein.

In issuing and making NFPA Standards available, the NFPA is not undertaking to render professional or other services for or on behalf of any person or entity. Nor is the NFPA undertaking to perform any duty owed by any person or entity to someone else. Anyone using this document should rely on his or her own independent judgment or, as appropriate, seek the advice of a competent professional in determining the exercise of reasonable care in any given circumstances.

The NFPA has no power, nor does it undertake, to police or enforce compliance with the contents of NFPA Standards. Nor does the NFPA list, certify, test, or inspect products, designs, or installations for compliance with this document. Any certification or other statement of compliance with the requirements of this document shall not be attributable to the NFPA and is solely the responsibility of the certifier or maker of the statement.

ADDITIONAL NOTICES AND DISCLAIMERS

Updating of NFPA Standards

Users of NFPA codes, standards, recommended practices, and guides ("NFPA Standards") should be aware that these documents may be superseded at any time by the issuance of new editions or may be amended from time to time through the issuance of Tentative Interim Amendments or corrected by Errata. An official NFPA Standard at any point in time consists of the current edition of the document together with any Tentative Interim Amendments and any Errata then in effect. In order to determine whether a given document is the current edition and whether it has been amended through the issuance of Tentative Interim Amendments or corrected through the issuance of Errata, consult appropriate NFPA publications such as the National Fire Codes® Subscription Service, visit the NFPA website at www.nfpa.org, or contact the NFPA at the address listed below.

Interpretations of NFPA Standards

A statement, written or oral, that is not processed in accordance with Section 6 of the Regulations Governing the Development of NFPA Standards shall not be considered the official position of NFPA or any of its Committees and shall not be considered to be, nor be relied upon as, a Formal Interpretation.

Patents

The NFPA does not take any position with respect to the validity of any patent rights referenced in, related to, or asserted in connection with an NFPA Standard. The users of NFPA Standards bear the sole responsibility for determining the validity of any such patent rights, as well as the risk of infringement of such rights, and the NFPA disclaims liability for the infringement of any patent resulting from the use of or reliance on NFPA Standards.

NFPA adheres to the policy of the American National Standards Institute (ANSI) regarding the inclusion of patents in American National Standards ("the ANSI Patent Policy"), and hereby gives the following notice pursuant to that policy:

> **NOTICE:** The user's attention is called to the possibility that compliance with an NFPA Standard may require use of an invention covered by patent rights. NFPA takes no position as to the validity of any such patent rights or as to whether such patent rights constitute or include essential patent claims under the ANSI Patent Policy. If, in connection with the ANSI Patent Policy, a patent holder has filed a statement of willingness to grant licenses under these rights on reasonable and nondiscriminatory terms and conditions to applicants desiring to obtain such a license, copies of such filed statements can be obtained, on request, from NFPA. For further information, contact the NFPA at the address listed below.

Law and Regulations

Users of NFPA Standards should consult applicable federal, state, and local laws and regulations. NFPA does not, by the publication of its codes, standards, recommended practices, and guides, intend to urge action that is not in compliance with applicable laws, and these documents may not be construed as doing so.

Copyrights

NFPA Standards are copyrighted. They are made available for a wide variety of both public and private uses. These include both use, by reference, in laws and regulations, and use in private self-regulation, standardization, and the promotion of safe practices and methods. By making these documents available for use and adoption by public authorities and private users, the NFPA does not waive any rights in copyright to these documents.

Use of NFPA Standards for regulatory purposes should be accomplished through adoption by reference. The term "adoption by reference" means the citing of title, edition, and publishing information only. Any deletions, additions, and changes desired by the adopting authority should be noted separately in the adopting instrument. In order to assist NFPA in following the uses made of its documents, adopting authorities are requested to notify the NFPA (Attention: Secretary, Standards Council) in writing of such use. For technical assistance and questions concerning adoption of NFPA Standards, contact NFPA at the address below.

For Further Information

All questions or other communications relating to NFPA Standards and all requests for information on NFPA procedures governing its codes and standards development process, including information on the procedures for requesting Formal Interpretations, for proposing Tentative Interim Amendments, and for proposing revisions to NFPA standards during regular revision cycles, should be sent to NFPA headquarters, addressed to the attention of the Secretary, Standards Council, NFPA, 1 Batterymarch Park, P.O. Box 9101, Quincy, MA 02269-9101; email: stds_admin@nfpa.org

For more information about NFPA, visit the NFPA website at www.nfpa.org. All NFPA codes and standards can be viewed at no cost at www.nfpa.org/docinfo.

EDUFIRE.IR

NFPA 13 Metric Conversions

This list is a compilation of dimensions and metric conversions commonly used in NFPA 13. It is intended to be an all-inclusive list and should cover every dimension, unit, and conversion illustrated in NFPA 13. This list will be shared with all water-based projects within NFPA and, eventually, will provide consistent conversions throughout all water-based standards.

Length (inches/millimeters)

.003 in.	.08 mm	2 in.	50 mm	11 in.	275 mm	22.5 in.	565 mm	40 in.	1000 mm
.0315 in.	.8 mm	2.5 in.	65 mm	11.5 in.	290 mm	23 in.	575 mm	42 in.	1050 mm
1/32 in.	0.8 mm	2.75 in.	70 mm	12 in.	300 mm	24 in.	600 mm	44 in.	1100 mm
1/16 in.	1.6 mm	3 in.	75 mm	12.25 in.	305 mm	25 in.	625 mm	47 in.	1175 mm
3/32 in.	2 mm	3.5 in.	90 mm	12.5 in.	315 mm	25.5 in.	640 mm	48 in.	1200 mm
1/8 in.	3 mm	4 in.	100 mm	12.75 in.	320 mm	26 in.	650 mm	54 in.	1350 mm
3/16 in.	5 mm	4.5 in.	115 mm	14 in.	350 mm	27.6 in.	690 mm	55 in.	1375 mm
1/4 in.	6 mm	5 in.	125 mm	15 in.	375 mm	28 in.	700 mm	57 in.	1425 mm
5/16 in.	8 mm	5.5 in.	140 mm	15.5 in.	390 mm	29 in.	725 mm	58 in.	1450 mm
3/8 in.	10 mm	5.75 in.	145 mm	16 in.	400 mm	30 in.	750 mm	66 in.	1650 mm
1/2 in.	13 mm	6 in.	150 mm	16.25 in.	410 mm	30.5 in.	765 mm	68 in.	1700 mm
17/32 in.	13 mm	7 in.	175 mm	16.5 in.	415 mm	31 in.	775 mm	72 in.	1800 mm
9/16 in.	14 mm	7.5 in.	190 mm	17 in.	425 mm	32 in.	800 mm	76 in.	1900 mm
5/8 in.	16 mm	8 in.	200 mm	17.5 in.	440 mm	33 in.	825 mm	78 in.	1950 mm
3/4 in.	19 mm	8.5 in.	215 mm	18 in.	450 mm	35 in.	875 mm	96 in.	2400 mm
7/8 in.	22 mm	9 in.	225 mm	19 in.	475 mm	35.4 in.	885 mm	102 in.	2550 mm
1 in.	25 mm	9.25 in.	230 mm	20 in.	500 mm	36 in.	900 mm	120 in.	3000 mm
1.5 in.	40 mm	9.5 in.	240 mm	21 in.	525 mm	37 in.	925 mm	148 in.	3700 mm
1.75 in.	45 mm	10 in.	250 mm	22 in.	550 mm	38 in.	950 mm		

Length (feet/meters)

3.5 ft	1.1 m	7 ft 7 in.	2.3 m	12 ft	3.7 m	20 ft	6.1 m	36 ft	11 m
3 ft 8 in.	1.1 m	7 ft 9 in.	2.4 m	12 ft 4 in.	3.8 m	20 ft 8 in.	6.3 m	40 ft	12 m
4 ft	1.2 m	8 ft	2.4 m	13 ft	4.0 m	21 ft 6 in.	6.6 m	41 ft 3 in.	13 m
4 ft 2 in.	1.3 m	8 ft 2 in.	2.5 m	13 ft 6 in.	4.1 m	21 ft 10 in.	6.7 m	45 ft	14 m
4.5 ft	1.4 m	8 ft 4 in.	2.5 m	13 ft 7 1/2 in.	4.2 m	22 ft	6.7 m	50 ft	15 m
4 ft 7in.	1.4 m	8 ft 7 7/8 in.	2.6 m	13 ft 11 in.	4.2 m	22 ft 6 in.	6.9 m	51 ft 6 in.	16 m
4 ft 9 in.	1.4 m	9 ft	2.7 m	14 ft	4.3 m	24 ft	7.3 m	55 ft	17 m
5 ft	1.5 m	9 ft 5 in.	2.9 m	14 ft 6 in.	4.4 m	25 ft	7.6 m	60 ft	18 m
5 ft 2 in.	1.6 m	9 ft 6 in.	2.9 m	15 ft	4.6 m	25 ft 3 in.	7.7 m	65 ft	20 m
5.5 ft	1.7 m	10 ft	3 m	15 ft 4 in.	4.7 m	26 ft	7.9 m	70 ft	21 m
5 ft 8 in.	1.7 m	10.5 ft	3.2 m	16 ft	4.9 m	27 ft	8.2 m	75 ft	23 m
5 ft 9 5/16 in.	1.8 m	10 ft 9 in.	3.3 m	16 ft 6 in.	5.0 m	28 ft	8.5 m	76 ft	23 m
6 ft	1.8 m	10 ft 10 in.	3.3 m	16 ft 8 in.	5.1 m	28 ft 8 in.	8.7 m	80 ft	24 m
6 ft 3 in.	1.9 m	11 ft 0 in.	3.4 m	17 ft	5.2 m	29 ft 8 in.	9 m	100 ft	30 m
6 ft 4 in.	1.9 m	11 ft 3 in.	3.4 m	18 ft	5.5 m	30 ft	9.1 m	200 ft	61 m
6.5 ft	2 m	11 ft 5 in.	3.5 m	16 ft 6 in.	5.6 m	32 ft	10 m	250 ft	76 m
6 ft 10 in.	2.1 m	11 ft 6 in.	3.5 m	19 ft 2 in.	5.8 m	33 ft	10 m	300 ft	91 m
7 ft	2.1 m	11 ft 6 11/16 in.	3.5 m	19 ft 10 in.	6 m	35 ft	11 m	400 ft	120 m
7.5 ft	2.3 m	11 ft 8 in.	3.6 m	19 ft 11 in.	6.1 m				

Area

3.5 ft^2	0.3 m^2	110 ft^2	10 m^2	400 ft^2	37 m^2	1,800 ft^2	165 m^2	3,900 ft^2	360 m^2
6 ft^2	0.6 m^2	120 ft^2	11 m^2	450 ft^2	42 m^2	1,950 ft^2	180 m^2	4,000 ft^2	370 m^2
10 ft^2	0.9 m^2	124 ft^2	12 m^2	504 ft^2	47 m^2	2,000 ft^2	185 m^2	4,100 ft^2	380 m^2
12 ft^2	1.1 m^2	130 ft^2	12 m^2	585 ft^2	54 m^2	2,300 ft^2	215 m^2	4,500 ft^2	420 m^2
16 ft^2	1.5 m^2	144 ft^2	13 m^2	600 ft^2	56 m^2	2,500 ft^2	230 m^2	4,800 ft^2	445 m^2
18 ft^2	1.7 m^2	150 ft^2	14 m^2	648 ft^2	60 m^2	2,535 ft^2	235 m^2	5,000 ft^2	465 m^2
20 ft^2	1.9 m^2	168 ft^2	16 m^2	700 ft^2	65 m^2	2,600 ft^2	240 m^2	6,000 ft^2	555 m^2
24 ft^2	2.2 m^2	175 ft^2	16 m^2	756 ft^2	70 m^2	2,700 ft^2	250 m^2	6,400 ft^2	595 m^2
25 ft^2	2.3 m^2	196 ft^2	18 m^2	768 ft^2	71 m^2	2,734 ft^2	255 m^2	8,000 ft^2	740 m^2
32 ft^2	3.0 m^2	200 ft^2	18 m^2	800 ft^2	74 m^2	2,800 ft^2	260 m^2	8,800 ft^2	820 m^2
50 ft^2	4.6 m^2	225 ft^2	20 m^2	1,000 ft^2	93 m^2	3,000 ft^2	280 m^2	10,000 ft^2	930 m^2
55 ft^2	5.1 m^2	250 ft^2	23 m^2	1,200 ft^2	112 m^2	3,250 ft^2	300 m^2	13,100 ft^2	1215 m^2
64 ft^2	5.9 m^2	256 ft^2	24 m^2	1,300 ft^2	120 m^2	3,300 ft^2	305 m^2	25,000 ft^2	2320 m^2
70 ft^2	6.5 m^2	300 ft^2	28 m^2	1,365 ft^2	125 m^2	3,450 ft^2	320 m^2	40,000 ft^2	3720 m^2
80 ft^2	7.4 m^2	306 ft^2	28 m^2	1,400 ft^2	130 m^2	3,500 ft^2	325 m^2	50,000 ft^2	4650 m^2
90 ft^2	8.4 m^2	324 ft^2	30 m^2	1,500 ft^2	140 m^2	3,600 ft^2	335 m^2	52,000 ft^2	4830 m^2
100 ft^2	9 m^2	395 ft^2	37 m^2	1,700 ft^2	160 m^2	3,750 ft^2	350 m^2	100,000 ft^2	9230 m^2

Flow

30 gpm	115 lpm	120 gpm	455 lpm	500 gpm	1900 lpm	1000 gpm	3800 lpm
15 gpm	57 lpm	138 gpm	520 lpm	600 gpm	2250 lpm	1500 gpm	5700 lpm
20 gpm	75 lpm	200 gpm	760 lpm	700 gpm	2650 lpm	1992 gpm	7540 lpm
50 gpm	190 lpm	215.8 gpm	815 lpm	750 gpm	2850 lpm	1993 gpm	7543 lpm
60 gpm	230 lpm	250 gpm	950 lpm	800 gpm	3050 lpm	2156 gpm	8160 lpm
100 gpm	380 lpm	300 gpm	1150 lpm	850 gpm	3200 lpm	2575 gpm	9750 lpm
102.8 gpm	390 lpm	400 gpm	1500 lpm	900 gpm	3400 lpm	4907 gpm	18,572 lpm

Pressure

5 psi	0.3 bar	22 psi	1.5 bar	75 psi	5.2 bar	189 psi	13 bar
7 psi	0.5 bar	25 psi	1.7 bar	90 psi	6.2 bar	200 psi	14 bar
10 psi	0.7 bar	30 psi	2.1 bar	100 psi	6.9 bar	259 psi	17 bar
11 psi	.8 bar	35 psi	2.4 bar	150 psi	10 bar	300 psi	21 bar
15 psi	1.0 bar	50 psi	3.4 bar	165 psi	11 bar	400 psi	28 bar
20 psi	1.4 bar	63 psi	4.3 bar	175 psi	12 bar		

Discharge Density

.005 gpm/ft^2	.2 mm/min	.32 gpm/ft^2	13.0 mm/min	.57 gpm/ft^2	23.2 mm/min
.05 gpm/ft^2	2.04 mm/min	.33 gpm/ft^2	13.4 mm/min	.6 gpm/ft^2	24.5 mm/min
.1 gpm/ft^2	4.1 mm/min	.34 gpm/ft^2	13.9 mm/min	.61 gpm/ft^2	24.9 mm/min
.15 gpm/ft^2	6.1 mm/min	.35 gpm/ft^2	14.3 mm/min	.65 gpm/ft^2	26.5 mm/min
.16 gpm/ft^2	6.5 mm/min	.37 gpm/ft^2	15.1 mm/min	.68 gpm/ft^2	27.7 mm/min
.17 gpm/ft^2	7.0 mm/min	.375 gpm/ft^2	15.3 mm/min	.7 gpm/ft^2	28.5 mm/min
.18 gpm/ft^2	7.3 mm/min	.39 gpm/ft^2	15.9 mm/min	.74 gpm/ft^2	30.2 mm/min
.19 gpm/ft^2	7.7 mm/min	.4 gpm/ft^2	16.3 mm/min	.75 gpm/ft^2	30.6 mm/min
.2 gpm/ft^2	8.2 mm/min	.42 gpm/ft^2	17.1 mm/min	.77 gpm/ft^2	31.4 mm/min
.21 gpm/ft^2	8.6 mm/min	.425 gpm/ft^2	17.3 mm/min	.8 gpm/ft^2	32.6 mm/min
.225 gpm/ft^2	9.2 mm/min	.426 gpm/ft^2	17.4 mm/min	.85 gpm/ft^2	34.6 mm/min
.24 gpm/ft^2	9.8 mm/min	.44 gpm/ft^2	17.9 mm/min	.9 gpm/ft^2	36.7 mm/min
.25 gpm/ft^2	10.2 mm/min	.45 gpm/ft^2	18.3 mm/min	.92 gpm/ft^2	37.5 mm/min
.26 gpm/ft^2	10.6 mm/min	.46 gpm/ft^2	18.7 mm/min	.96 gpm/ft^2	39.1 mm/min
.28 gpm/ft^2	11.4 mm/min	.49 gpm/ft^2	20 mm/min	1.1 gpm/ft^2	44.8 mm/min
.29 gpm/ft^2	11.8 mm/min	.5 gpm/ft^2	20.4 mm/min	1.2 gpm/ft^2	48.9 mm/min
.3 gpm/ft^2	12.2 mm/min	.55 gpm/ft^2	22.4 mm/min	6.0 gpm/ft^2	245 mm/min
.31 gpm/ft^2	12.6 mm/min	.56 gpm/ft^2	22.8 mm/min	7.5 gpm/ft^2	306 mm/min

Volume

1.76 cu in	28 ml	160 ft^3	4.5 m^3
15.5 ft^3	0.5 m^3	400 ft^3	11 m^3
17.4 ft^3	0.5 m^3	1,000 ft^3	28 m^3
17.6 ft^3	0.5 m^3	1,800 ft^3	51 m^3
20.7 ft^3	0.6 m^3	2,100 ft^3	59 m^3
21.1 ft^3	0.6 m^3	2,300 ft^3	65 m^3
22 ft^3	0.6 m^3	6,500 ft^3	184 m^3
100 ft^3	2.8 m^3	2.25M ft^3	63,720 m^3

Capacity

16 oz.	0.5 L	150 gal	570 L
32 oz.	1 L	250 gal	950 L
1 gal	4 L	500 gal	1900 L
5 gal	20 L	750 gal	2850 L
40 gal	150 L	300,000 gal	1,135,500 L
100 gal	380 L		

Weight

6 lb	2.7 kg	440 lb	200 kg
10 lb	4.5 kg	520 lb	235 kg
20 lb	9.1 kg	750 lb	340 kg
40 lb	18 kg	787 lb	355 kg
61 lb	27 kg	1200 lb	544 kg
91 lb	41 kg	1634 lb	740 kg
131 lb	59 kg	2000 lb	907 kg
200 lb	91 kg	2300 lb	1043 kg
250 lb	115 kg	4000 lb	1815 kg
350 lb	160 kg		

Density of Cotton Bales

22.0 lb/ft^3	350 kg/m^3
22.7 lb/ft^3	365 kg/m^3
24.2 lb/ft^3	390 kg/m^3
28.4 lb/ft^3	455 kg/m^3
28.7 lb/ft^3	460 kg/m^3
32.2 lb/ft^3	515 kg/m^3

Gauge

12	2.8 mm
14	1.98 mm
16	1.57 mm
22	0.78 mm
24	0.63 mm

Drill Size

3/32 in.	2.3 mm
1/8 in.	3.2 mm
3/8 in.	10 mm

Velocity

30 mph	49 km/h

EDUFIRE.IR

NFPA 13 Metric Conversions

This list is a compilation of dimensions and metric conversions commonly used in NFPA 13. It is intended to be an all-inclusive list and should cover every dimension, unit, and conversion illustrated in NFPA 13. This list will be shared with all water-based projects within NFPA and, eventually, will provide consistent conversions throughout all water-based standards.

Length (inches/millimeters)

.003 in.	.08 mm	2 in.	50 mm	11 in.	275 mm	22.5 in.	565 mm	40 in.	1000 mm
.0315 in.	.8 mm	2.5 in.	65 mm	11.5 in.	290 mm	23 in.	575 mm	42 in.	1050 mm
1/32 in.	0.8 mm	2.75 in.	70 mm	12 in.	300 mm	24 in.	600 mm	44 in.	1100 mm
1/16 in.	1.6 mm	3 in.	75 mm	12.25 in.	305 mm	25 in.	625 mm	47 in.	1175 mm
3/32 in.	2 mm	3.5 in.	90 mm	12.5 in.	315 mm	25.5 in.	640 mm	48 in.	1200 mm
1/8 in.	3 mm	4 in.	100 mm	12.75 in.	320 mm	26 in.	650 mm	54 in.	1350 mm
3/16 in.	5 mm	4.5 in.	115 mm	14 in.	350 mm	27.6 in.	690 mm	55 in.	1375 mm
1/4 in.	6 mm	5 in.	125 mm	15 in.	375 mm	28 in.	700 mm	57 in.	1425 mm
5/16 in.	8 mm	5.5 in.	140 mm	15.5 in.	390 mm	29 in.	725 mm	58 in.	1450 mm
3/8 in.	10 mm	5.75 in.	145 mm	16 in.	400 mm	30 in.	750 mm	66 in.	1650 mm
1/2 in.	13 mm	6 in.	150 mm	16.25 in.	410 mm	30.5 in.	765 mm	68 in.	1700 mm
17/32 in.	13 mm	7 in.	175 mm	16.5 in.	415 mm	31 in.	775 mm	72 in.	1800 mm
9/16 in.	14 mm	7.5 in.	190 mm	17 in.	425 mm	32 in.	800 mm	76 in.	1900 mm
5/8 in.	16 mm	8 in.	200 mm	17.5 in.	440 mm	33 in.	825 mm	78 in.	1950 mm
3/4 in.	19 mm	8.5 in.	215 mm	18 in.	450 mm	35 in.	875 mm	96 in.	2400 mm
7/8 in.	22 mm	9 in.	225 mm	19 in.	475 mm	35.4 in.	885 mm	102 in.	2550 mm
1 in.	25 mm	9.25 in.	230 mm	20 in.	500 mm	36 in.	900 mm	120 in.	3000 mm
1.5 in.	40 mm	9.5 in.	240 mm	21 in.	525 mm	37 in.	925 mm	148 in.	3700 mm
1.75 in.	45 mm	10 in.	250 mm	22 in.	550 mm	38 in.	950 mm		

Length (feet/meters)

3.5 ft	1.1 m	7 ft 7 in.	2.3 m	12 ft	3.7 m	20 ft	6.1 m	36 ft	11 m
3 ft 8 in.	1.1 m	7 ft 9 in.	2.4 m	12 ft 4 in.	3.8 m	20 ft 8 in.	6.3 m	40 ft	12 m
4 ft	1.2 m	8 ft	2.4 m	13 ft	4.0 m	21 ft 6 in.	6.6 m	41 ft 3 in.	13 m
4 ft 2 in.	1.3 m	8 ft 2 in.	2.5 m	13 ft 6 in.	4.1 m	21 ft 10 in.	6.7 m	45 ft	14 m
4.5 ft	1.4 m	8 ft 4 in.	2.5 m	13 ft 7 1/2 in.	4.2 m	22 ft	6.7 m	50 ft	15 m
4 ft 7in.	1.4 m	8 ft 7 7/8 in.	2.6 m	13 ft 11 in.	4.2 m	22 ft 6 in.	6.9 m	51 ft 6 in.	16 m
4 ft 9 in.	1.4 m	9 ft	2.7 m	14 ft	4.3 m	24 ft	7.3 m	55 ft	17 m
5 ft	1.5 m	9 ft 5 in.	2.9 m	14 ft 6 in.	4.4 m	25 ft	7.6 m	60 ft	18 m
5 ft 2 in.	1.6 m	9 ft 6 in.	2.9 m	15 ft	4.6 m	25 ft 3 in.	7.7 m	65 ft	20 m
5.5 ft	1.7 m	10 ft	3 m	15 ft 4 in.	4.7 m	26 ft	7.9 m	70 ft	21 m
5 ft 8 in.	1.7 m	10.5 ft	3.2 m	16 ft	4.9 m	27 ft	8.2 m	75 ft	23 m
5 ft 9 5/16 in.	1.8 m	10 ft 9 in.	3.3 m	16 ft 6 in.	5.0 m	28 ft	8.5 m	76 ft	23 m
6 ft	1.8 m	10 ft 10 in.	3.3 m	16 ft 8 in.	5.1 m	28 ft 8 in.	8.7 m	80 ft	24 m
6 ft 3 in.	1.9 m	11 ft 0 in.	3.4 m	17 ft	5.2 m	29 ft 8 in.	9 m	100 ft	30 m
6 ft 4 in.	1.9 m	11 ft 3 in.	3.4 m	18 ft	5.5 m	30 ft	9.1 m	200 ft	61 m
6.5 ft	2 m	11 ft 5 in.	3.5 m	16 ft 6 in.	5.6 m	32 ft	10 m	250 ft	76 m
6 ft 10 in.	2.1 m	11 ft 6 in.	3.5 m	19 ft 2 in.	5.8 m	33 ft	10 m	300 ft	91 m
7 ft	2.1 m	11 ft 6 11/16 in.	3.5 m	19 ft 10 in.	6 m	35 ft	11 m	400 ft	120 m
7.5 ft	2.3 m	11 ft 8 in.	3.6 m	19 ft 11 in.	6.1 m				

Area

3.5 ft^2	0.3 m^2	110 ft^2	10 m^2	400 ft^2	37 m^2	1,800 ft^2	165 m^2	3,900 ft^2	360 m^2
6 ft^2	0.6 m^2	120 ft^2	11 m^2	450 ft^2	42 m^2	1,950 ft^2	180 m^2	4,000 ft^2	370 m^2
10 ft^2	0.9 m^2	124 ft^2	12 m^2	504 ft^2	47 m^2	2,000 ft^2	185 m^2	4,100 ft^2	380 m^2
12 ft^2	1.1 m^2	130 ft^2	12 m^2	585 ft^2	54 m^2	2,300 ft^2	215 m^2	4,500 ft^2	420 m^2
16 ft^2	1.5 m^2	144 ft^2	13 m^2	600 ft^2	56 m^2	2,500 ft^2	230 m^2	4,800 ft^2	445 m^2
18 ft^2	1.7 m^2	150 ft^2	14 m^2	648 ft^2	60 m^2	2,535 ft^2	235 m^2	5,000 ft^2	465 m^2
20 ft^2	1.9 m^2	168 ft^2	16 m^2	700 ft^2	65 m^2	2,600 ft^2	240 m^2	6,000 ft^2	555 m^2
24 ft^2	2.2 m^2	175 ft^2	16 m^2	756 ft^2	70 m^2	2,700 ft^2	250 m^2	6,400 ft^2	595 m^2
25 ft^2	2.3 m^2	196 ft^2	18 m^2	768 ft^2	71 m^2	2,734 ft^2	255 m^2	8,000 ft^2	740 m^2
32 ft^2	3.0 m^2	200 ft^2	18 m^2	800 ft^2	74 m^2	2,800 ft^2	260 m^2	8,800 ft^2	820 m^2
50 ft^2	4.6 m^2	225 ft^2	20 m^2	1,000 ft^2	93 m^2	3,000 ft^2	280 m^2	10,000 ft^2	930 m^2
55 ft^2	5.1 m^2	250 ft^2	23 m^2	1,200 ft^2	112 m^2	3,250 ft^2	300 m^2	13,100 ft^2	1215 m^2
64 ft^2	5.9 m^2	256 ft^2	24 m^2	1,300 ft^2	120 m^2	3,300 ft^2	305 m^2	25,000 ft^2	2320 m^2
70 ft^2	6.5 m^2	300 ft^2	28 m^2	1,365 ft^2	125 m^2	3,450 ft^2	320 m^2	40,000 ft^2	3720 m^2
80 ft^2	7.4 m^2	306 ft^2	28 m^2	1,400 ft^2	130 m^2	3,500 ft^2	325 m^2	50,000 ft^2	4650 m^2
90 ft^2	8.4 m^2	324 ft^2	30 m^2	1,500 ft^2	140 m^2	3,600 ft^2	335 m^2	52,000 ft^2	4830 m^2
100 ft^2	9 m^2	395 ft^2	37 m^2	1,700 ft^2	160 m^2	3,750 ft^2	350 m^2	100,000 ft^2	9230 m^2

Flow

30 gpm	115 lpm	120 gpm	455 lpm	500 gpm	1900 lpm	1000 gpm	3800 lpm
15 gpm	57 lpm	138 gpm	520 lpm	600 gpm	2250 lpm	1500 gpm	5700 lpm
20 gpm	75 lpm	200 gpm	760 lpm	700 gpm	2650 lpm	1992 gpm	7540 lpm
50 gpm	190 lpm	215.8 gpm	815 lpm	750 gpm	2850 lpm	1993 gpm	7543 lpm
60 gpm	230 lpm	250 gpm	950 lpm	800 gpm	3050 lpm	2156 gpm	8160 lpm
100 gpm	380 lpm	300 gpm	1150 lpm	850 gpm	3200 lpm	2575 gpm	9750 lpm
102.8 gpm	390 lpm	400 gpm	1500 lpm	900 gpm	3400 lpm	4907 gpm	18,572 lpm

Pressure

5 psi	0.3 bar	22 psi	1.5 bar	75 psi	5.2 bar	189 psi	13 bar
7 psi	0.5 bar	25 psi	1.7 bar	90 psi	6.2 bar	200 psi	14 bar
10 psi	0.7 bar	30 psi	2.1 bar	100 psi	6.9 bar	259 psi	17 bar
11 psi	.8 bar	35 psi	2.4 bar	150 psi	10 bar	300 psi	21 bar
15 psi	1.0 bar	50 psi	3.4 bar	165 psi	11 bar	400 psi	28 bar
20 psi	1.4 bar	63 psi	4.3 bar	175 psi	12 bar		

Discharge Density

.005 gpm/ft^2	.2 mm/min	.32 gpm/ft^2	13.0 mm/min	.57 gpm/ft^2	23.2 mm/min
.05 gpm/ft^2	2.04 mm/min	.33 gpm/ft^2	13.4 mm/min	.6 gpm/ft^2	24.5 mm/min
.1 gpm/ft^2	4.1 mm/min	.34 gpm/ft^2	13.9 mm/min	.61 gpm/ft^2	24.9 mm/min
.15 gpm/ft^2	6.1 mm/min	.35 gpm/ft^2	14.3 mm/min	.65 gpm/ft^2	26.5 mm/min
.16 gpm/ft^2	6.5 mm/min	.37 gpm/ft^2	15.1 mm/min	.68 gpm/ft^2	27.7 mm/min
.17 gpm/ft^2	7.0 mm/min	.375 gpm/ft^2	15.3 mm/min	.7 gpm/ft^2	28.5 mm/min
.18 gpm/ft^2	7.3 mm/min	.39 gpm/ft^2	15.9 mm/min	.74 gpm/ft^2	30.2 mm/min
.19 gpm/ft^2	7.7 mm/min	.4 gpm/ft^2	16.3 mm/min	.75 gpm/ft^2	30.6 mm/min
.2 gpm/ft^2	8.2 mm/min	.42 gpm/ft^2	17.1 mm/min	.77 gpm/ft^2	31.4 mm/min
.21 gpm/ft^2	8.6 mm/min	.425 gpm/ft^2	17.3 mm/min	.8 gpm/ft^2	32.6 mm/min
.225 gpm/ft^2	9.2 mm/min	.426 gpm/ft^2	17.4 mm/min	.85 gpm/ft^2	34.6 mm/min
.24 gpm/ft^2	9.8 mm/min	.44 gpm/ft^2	17.9 mm/min	.9 gpm/ft^2	36.7 mm/min
.25 gpm/ft^2	10.2 mm/min	.45 gpm/ft^2	18.3 mm/min	.92 gpm/ft^2	37.5 mm/min
.26 gpm/ft^2	10.6 mm/min	.46 gpm/ft^2	18.7 mm/min	.96 gpm/ft^2	39.1 mm/min
.28 gpm/ft^2	11.4 mm/min	.49 gpm/ft^2	20 mm/min	1.1 gpm/ft^2	44.8 mm/min
.29 gpm/ft^2	11.8 mm/min	.5 gpm/ft^2	20.4 mm/min	1.2 gpm/ft^2	48.9 mm/min
.3 gpm/ft^2	12.2 mm/min	.55 gpm/ft^2	22.4 mm/min	6.0 gpm/ft^2	245 mm/min
.31 gpm/ft^2	12.6 mm/min	.56 gpm/ft^2	22.8 mm/min	7.5 gpm/ft^2	306 mm/min

Volume

1.76 cu in	28 ml	160 ft^3	4.5 m^3
15.5 ft^3	0.5 m^3	400 ft^3	11 m^3
17.4 ft^3	0.5 m^3	1,000 ft^3	28 m^3
17.6 ft^3	0.5 m^3	1,800 ft^3	51 m^3
20.7 ft^3	0.6 m^3	2,100 ft^3	59 m^3
21.1 ft^3	0.6 m^3	2,300 ft^3	65 m^3
22 ft^3	0.6 m^3	6,500 ft^3	184 m^3
100 ft^3	2.8 m^3	2.25M ft^3	63,720 m^3

Capacity

16 oz.	0.5 L	150 gal	570 L
32 oz.	1 L	250 gal	950 L
1 gal	4 L	500 gal	1900 L
5 gal	20 L	750 gal	2850 L
40 gal	150 L	300,000 gal	1,135,500 L
100 gal	380 L		

Weight

6 lb	2.7 kg	440 lb	200 kg
10 lb	4.5 kg	520 lb	235 kg
20 lb	9.1 kg	750 lb	340 kg
40 lb	18 kg	787 lb	355 kg
61 lb	27 kg	1200 lb	544 kg
91 lb	41 kg	1634 lb	740 kg
131 lb	59 kg	2000 lb	907 kg
200 lb	91 kg	2300 lb	1043 kg
250 lb	115 kg	4000 lb	1815 kg
350 lb	160 kg		

Density of Cotton Bales

22.0 lb/ft^3	350 kg/m^3
22.7 lb/ft^3	365 kg/m^3
24.2 lb/ft^3	390 kg/m^3
28.4 lb/ft^3	455 kg/m^3
28.7 lb/ft^3	460 kg/m^3
32.2 lb/ft^3	515 kg/m^3

Gauge

12	2.8 mm
14	1.98 mm
16	1.57 mm
22	0.78 mm
24	0.63 mm

Drill Size

3/32 in.	2.3 mm
1/8 in.	3.2 mm
3/8 in.	10 mm

Velocity

30 mph	49 km/h

EDUFIRE.IR

Tentative Interim Amendment

NFPA® 13

Standard for the Installation of Sprinkler Systems

2019 Edition

Reference: Table 17.2.2.1 note
TIA 19-1
(SC 18-4-1 / TIA Log #1351)

Note: Text of the TIA was issued and approved for incorporation into the document prior to printing.

1. *Revise Table 17.2.2.1 note to read as follows:*
   * Limited to single- and double-row racks with minimum ~~Minimum~~ 8 ft (2.4 m) ~~aisle~~ aisles.

Issue Date: August 14, 2018

Effective Date: September 3, 2018

(Note: For further information on NFPA Codes and Standards, please see www.nfpa.org/docinfo**)**

Copyright © 2018 All Rights Reserved
NATIONAL FIRE PROTECTION ASSOCIATION

EDUFIRE.IR

Tentative Interim Amendment

NFPA® 13

Standard for the Installation of Sprinkler Systems

2019 Edition

Reference: Chapter 25 various
TIA 19-2
(SC 18-8-16 / TIA Log #1384)

Note: Text of the TIA was issued and approved for incorporation into the document prior to printing.

1. Add the following new paragraphs to Chapter 25 to read as follows:

25.2.3.1.3 For design densities of 0.2 gpm/ft² (8.2 mm/min) or less, standard-response CMDA sprinklers with a K-factor of K-5.6 (80) or larger shall be permitted.
25.2.3.1.4 For design densities greater than 0.2 gpm/ft² to 0.34 gpm/ft² (8.2 mm/min to 13.9 mm/min), standard-response CMDA sprinklers with a nominal K-factor of K-8.0 (115) or larger shall be used.
25.2.3.1.5 For design densities greater than 0.34 gpm/ft² (13.9 mm/min), standard-response CMDA sprinklers with a K-factor of K-11.2 (160) or larger that are listed for storage applications shall be used.
25.2.3.1.6 The requirements of 25.2.3.1.4 and 25.2.3.1.5 shall not apply to modifications to existing storage application systems, using sprinklers with K-factors of K-8.0 (115) or less.
25.2.3.1.7 The use of quick-response CMDA sprinklers for storage applications shall be permitted when listed for such use.
25.2.3.1.8 The ceiling sprinkler design figures in 25.2.3 indicate water demands for ordinary-temperature-rated and nominal high-temperature-rated CMDA sprinklers at the ceiling.
25.2.3.1.8.1 The ordinary-temperature ceiling sprinkler design densities correspond to ordinary-temperature-rated sprinklers and shall be used for sprinklers with ordinary- and intermediate-temperature classification.
25.2.3.1.8.2 The high-temperature ceiling sprinkler design densities correspond to high-temperature-rated sprinklers and shall be used for sprinklers having a high-temperature rating.
25.2.3.1.9 Ordinary- and intermediate-temperature CMDA ceiling sprinklers with K-factors of K-11.2 (K-160) or larger, where listed for storage, shall be permitted to use the densities for high-temperature sprinklers.
25.2.3.1.10 Discharge Considerations.
25.2.3.1.10.1 The water supply for ceiling and in-rack sprinklers only shall be determined from the density/area requirements of Chapter 25.
25.2.3.1.10.2 The calculations shall satisfy any single point on appropriate density/area curves.
25.2.3.1.10.3 The design area shall meet the requirements of 27.2.4.2.1.
25.2.3.1.10.4 The minimum design density shall be not less than 0.15 gpm/ft² (6.1 mm/min) after all adjustments are made.

Issue Date: August 14, 2018
Effective Date: September 3, 2018

(Note: For further information on NFPA Codes and Standards, please see www.nfpa.org/docinfo**)**
Copyright © 2018 All Rights Reserved
NATIONAL FIRE PROTECTION ASSOCIATION

EDUFIRE.IR

DOWNLOAD ALL NFPA STANDARDS IN EDUFIRE.IR

Follow us for more contact:

Telegram : @Edufire_ir

Instagram: @Edufire.ir

Aparat: Edufire.ir