National Fire Alarm and Signaling Code® Handbook

Ninth Edition

Edited by

Richard J. Roux
Senior Electrical Specialist, NFPA

Barry D. Chase
Senior Fire Alarm Engineer, NFPA

Christopher D. Coache
Senior Electrical Engineer, NFPA

With the complete text of the 2019 edition of *NFPA 72®, National Fire Alarm and Signaling Code®*

NATIONAL FIRE PROTECTION ASSOCIATION
The leading information and knowledge resource on fire, electrical and related hazards

How to Use the *National Fire Alarm and Signaling Code Handbook*, 2019 Edition

NFPA 720 icons indicate requirements previously found in NFPA 720, *Standard for the Installation of Carbon Monoxide (CO) Detection and Warning Equipment*

Nonmandatory Annex A material follows its corresponding Code text

System Design Tip icons identify commentary important to architects and engineers

Commentary text is shaded in green to distinguish it from Code text

23.1 Application.

NFPA 720

23.1.1* The application, installation, and performance of alarm and signaling systems within protected premises shall comply with the requirements of this chapter.

Δ **A.23.1.1** Chapter 23 is intended to cover alarm and signaling systems and their components, such as fire alarm, mass notification, carbon monoxide, and other signaling systems.

In-building mass notification systems, defined in 3.3.90.1.3, are systems used to provide appropriate information and instructions to occupants in emergency situations, including terrorist threats, chemical or biological hazards, and natural disasters. These systems can be separate from or integrated with the fire alarm system. When a fire alarm system is also used for mass notification, the system is considered a *combination system*, as defined in 3.3.111.1, and the requirements of 23.8.4 for combination systems apply. Because these systems are also used for mass notification, the requirements of Chapter 24 also apply.

FAQ How is the need established for a fire alarm system and its features?

System Design Tip

Chapter 23 does not require the installation of a protected premises (local) fire alarm system or any type of emergency control functions. Required systems are needed due to requirements of other applicable codes or statutes that have been adopted by the enforcing jurisdiction (see 23.3.1). Typically, the need for these systems and their features is established by enabling codes such as the local building code or NFPA *101*®, *Life Safety Code*®. Those codes are the source of any requirements for the installation of a fire alarm system, supervisory functions, or other emergency control functions controlled by a protected premises (local) fire alarm system. For nonrequired systems, the system designer is responsible for determining the functions and features that the system will include. Chapter 23 explains the methods of accomplishing these functions where required by another code, standard, or authority having jurisdiction or where selected by the system designer to meet the goals of the system owner. See Section 23.3 and associated commentary.

FM icons in Chapter 14 identify material of interest to facility managers

Commentary includes answers to frequently asked questions

Commentary exhibits are set off with green horizontal lines

As with other requirements in the Code, the inspection, testing, and maintenance requirements are considered minimum. In some cases, the authority having jurisdiction may impose requirements that are more stringent. For example, owners of large, high-value industrial facilities may establish corporate policies requiring more frequent system testing as part of their overall risk management strategy to minimize the potential for disruption of their operations.

FM

14.1.4 The requirements of this chapter shall apply to both new and existing systems.

FAQ Are the requirements of Chapter 14 retroactive?

The requirements of Chapter 14 are retroactive as applied to an existing system because compliance does not require changes to the system equipment, devices, circuits, or functions. It is expected that the most current edition of the Code be used for inspection, testing, and maintenance of both new

EXHIBIT 14.1

Fire Pump Installation. (Courtesy of Jeffrey Moore, P.E., JENSEN HUGHES)

For the convenience of the user, the requirements of Code paragraphs 17.7.3.2 through 17.7.3.5 have been organized in the tabular format below:

Spot-Type Smoke Detector Spacing and Mounting Location for Various Ceiling Types

Ceiling Slope	Ceiling Construction†	Special Conditions	Detector Spacing, *S*	Detector Mounting Location
Level (slope less than or equal to 1-in-8)	Smooth ceiling	—	One of the following: 1) Less than or equal to 30 ft (9.1 m) between detectors and less than or equal to one half spacing at right angles from walls or partitions within 15 percent of the ceiling height 2) All points within 70 percent of the nominal 30 ft (9.1 m) spacing Maximum coverage area adjusted for high air movement in accordance with 17.7.6.3, where appropriate.	Ceiling or sidewall within 12 in. (300 mm) of the ceiling
	Solid joist, beam, or intersecting beam (waffle or pan-type) with the following conditions: • Beam depth less than 10 percent of the ceiling height	—	Apply spacing for a level ceiling with smooth construction	For beams or intersecting beams: Ceiling or bottom of beams For solid joists: Bottom of joists
	Solid joist, beam, or intersecting beam (waffle or pan-type) with the following conditions: • Beam depth equal to or greater than 10 percent of the ceiling height • Beam spacing equal to or greater than 40 percent of the ceiling height	—	In each beam pocket	Ceiling
		In corridor 15 ft (4.6 m) wide or less with beams perpendicular to the corridor length	Apply spacing for a level ceiling with smooth construction	Ceiling or sidewall within 12 in. (300 mm) of the ceiling or bottom of beams/joists
		In room 900 ft^2 (84 m^2) or less	Apply spacing for a level ceiling with smooth construction	Ceiling or bottom of beams/joists
	Solid joist, beam, or intersecting beam (waffle or pan-type) with the following conditions: • Beam depth equal to or greater than 10 percent of the ceiling height • Beam spacing less than 40 percent of the ceiling height	—	Spacing parallel to beams: Apply spacing for a level ceiling with smooth construction Spacing perpendicular to beams: Apply one half the spacing for a level ceiling with smooth construction	For beams or intersecting beams: Ceiling or bottom of beams For solid joists: Bottom of joists
		In corridor 15 ft (4.6 m) wide or less with beams perpendicular to the corridor length	Apply spacing for a level ceiling with smooth construction	Ceiling or sidewall within 12 in. (300 mm) of the ceiling or bottom of beams/joists
		In room 900 ft^2 (84 m^2) or less	Apply spacing for a level ceiling with smooth construction	Ceiling or bottom of beams/joists
Shed or Peaked (slope greater than 1-in-8)	Smooth ceiling	—	Apply spacing for a level ceiling with smooth construction, based on the horizontal projection of the ceiling Locate a row of detectors within 36 in. (910 mm) of the peak, measured horizontally	Ceiling
	Solid joist or beam having all of the following conditions: • Beams/joists parallel to slope • Beam/joist depth less than 10 percent of the average ceiling height over the slope	—	Apply spacing for a level ceiling with smooth construction, based on the horizontal projection of the ceiling Locate a row of detectors within 36 in. (910 mm) of the peak, measured horizontally	For beams: Ceiling For solid joists: Bottom of joists
	Solid joist or beam having all of the following conditions: • Beams/joists parallel to slope • Beam/joist depth equal to or greater than 10 percent of the average ceiling height over the slope • Beam/joist spacing less than 40 percent of the average ceiling height over the slope	—	Perpendicular to slope: Apply one half the spacing for a level ceiling with smooth construction, based on the horizontal projection of the ceiling Parallel to slope: Apply spacing for a level ceiling with smooth construction, based on the horizontal projection of the ceiling Locate a row of detectors within 36 in. (910 mm) of the peak, measured horizontally	For beams: Ceiling For solid joists: Bottom of joists

For the convenience of the user, the requirements of Code paragraphs 17.7.3.2 through 17.7.3.5 have been organized in the tabular format below:

Spot-Type Smoke Detector Spacing and Mounting Location for Various Ceiling Types

Ceiling Slope	Ceiling Construction†	Special Conditions	Detector Spacing, *S*	Detector Mounting Location
Level (slope less than or equal to 1-in-8)	Smooth ceiling	—	One of the following: 1) Less than or equal to 30 ft (9.1 m) between detectors and less than or equal to one half spacing at right angles from walls or partitions within 15 percent of the ceiling height 2) All points within 70 percent of the nominal 30 ft (9.1 m) spacing Maximum coverage area adjusted for high air movement in accordance with 17.7.6.3, where appropriate.	Ceiling or sidewall within 12 in. (300 mm) of the ceiling
	Solid joist, beam, or intersecting beam (waffle or pan-type) with the following conditions: • Beam depth less than 10 percent of the ceiling height	—	Apply spacing for a level ceiling with smooth construction	For beams or intersecting beams: Ceiling or bottom of beams For solid joists: Bottom of joists
	Solid joist, beam, or intersecting beam (waffle or pan-type) with the following conditions: • Beam depth equal to or greater than 10 percent of the ceiling height • Beam spacing equal to or greater than 40 percent of the ceiling height	—	In each beam pocket	Ceiling
		In corridor 15 ft (4.6 m) wide or less with beams perpendicular to the corridor length	Apply spacing for a level ceiling with smooth construction	Ceiling or sidewall within 12 in. (300 mm) of the ceiling or bottom of beams/joists
		In room 900 ft^2 (84 m^2) or less	Apply spacing for a level ceiling with smooth construction	Ceiling or bottom of beams/joists
	Solid joist, beam, or intersecting beam (waffle or pan-type) with the following conditions: • Beam depth equal to or greater than 10 percent of the ceiling height • Beam spacing less than 40 percent of the ceiling height	—	Spacing parallel to beams: Apply spacing for a level ceiling with smooth construction Spacing perpendicular to beams: Apply one half the spacing for a level ceiling with smooth construction	For beams or intersecting beams: Ceiling or bottom of beams For solid joists: Bottom of joists
		In corridor 15 ft (4.6 m) wide or less with beams perpendicular to the corridor length	Apply spacing for a level ceiling with smooth construction	Ceiling or sidewall within 12 in. (300 mm) of the ceiling or bottom of beams/joists
		In room 900 ft^2 (84 m^2) or less	Apply spacing for a level ceiling with smooth construction	Ceiling or bottom of beams/joists
Shed or Peaked (slope greater than 1-in-8)	Smooth ceiling	—	Apply spacing for a level ceiling with smooth construction, based on the horizontal projection of the ceiling Locate a row of detectors within 36 in. (910 mm) of the peak, measured horizontally	Ceiling
	Solid joist or beam having all of the following conditions: • Beams/joists parallel to slope • Beam/joist depth less than 10 percent of the average ceiling height over the slope	—	Apply spacing for a level ceiling with smooth construction, based on the horizontal projection of the ceiling Locate a row of detectors within 36 in. (910 mm) of the peak, measured horizontally	For beams: Ceiling For solid joists: Bottom of joists
	Solid joist or beam having all of the following conditions: • Beams/joists parallel to slope • Beam/joist depth equal to or greater than 10 percent of the average ceiling height over the slope • Beam/joist spacing less than 40 percent of the average ceiling height over the slope	—	Perpendicular to slope: Apply one half the spacing for a level ceiling with smooth construction, based on the horizontal projection of the ceiling Parallel to slope: Apply spacing for a level ceiling with smooth construction, based on the horizontal projection of the ceiling Locate a row of detectors within 36 in. (910 mm) of the peak, measured horizontally	For beams: Ceiling For solid joists: Bottom of joists

Locations of Frequently Asked Questions in Handbook Commentary

Topic	FAQ	Section
Administrative	Does *NFPA 72* require the installation of a fire alarm system or other emergency system?	1.1.1
	Where the required system features are not specified through a framework of higher level mandates, who must determine the needs and features?	A.1.2.4
	Are the requirements of *NFPA 72* retroactive?	1.4.1
	Who approves equipment and installations?	A.3.2.1
	What is a nonrequired system, and what requirements must it meet?	A.23.3.2
	What type of information does the equipment listing contain?	10.3.1
	What is a releasing service fire alarm control unit?	3.3.108.2.2
Control Units, Power Supplies, and System Circuits	What is the purpose of voltage drop calculations?	18.3.2.3
	Who is responsible for selection of a circuit performance class?	23.4.2
	Where is T-tapping allowed, and where is it not allowed?	A.12.6
	Who is responsible for completing the record of completion form?	7.5.6.3
	What format must be used to mark the date of manufacture on the battery?	10.6.10.1.2
Inspection, Testing, and Maintenance	Are the requirements of Chapter 14 retroactive?	14.1.4
	Who should be notified before testing a fire alarm system?	14.2.4.1
	Are measurements of sound pressure levels required throughout the building for periodic testing?	14.4.3.2 22(1)
	After acceptance testing, should systems be tested periodically for intelligibility?	14.4.11.1
	Who is responsible for maintaining fire alarm system records?	14.6.1.3
Initiating Devices	Does Chapter 17 establish the need for the installation of initiating devices?	A.17.1.2
	How is ceiling height measured?	3.3.39
	What do analog initiating devices measure and transmit?	3.3.141.1
	What causes stratification?	3.3.287
	What does "total coverage" mean?	17.5.3.1
	What requirements apply to installations of nonrequired coverage?	17.5.3.3.1
	When is a statement of the detection system performance objective required to be included in the design documentation?	A.17.6.1.1
	Why must mechanical guards be listed for use with the detector?	17.4.2
	What factors must be considered in the selection of a heat detector temperature classification?	17.6.2.1
	What is the basis of the spacing factor, *S*, for heat detectors?	17.6.3.1.1
	Does *NFPA 72* require duct smoke detectors to be installed?	21.7
	Where must detectors be installed if duct detection is used in return air applications?	A.17.7.5.4.2.2
	Does the requirement to replace smoke alarms every 10 years apply to system smoke detectors?	14.4.5.8
	Does *NFPA 72* require sprinkler system supervision?	A.23.8.5.6
	Does *NFPA 72* require connection of a waterflow alarm initiating device to a fire alarm system?	A.23.8.5.5
	What type of flow switch should be used in a dry pipe, preaction, or deluge-type system?	17.13.2
	Does *NFPA 72* require supervision of fire suppression systems other than sprinklers?	23.8.5.8
	Why does the Code require at least one manual fire alarm box?	A.23.8.5.1.2
Notification Appliances	Do all fire alarm systems require the installation of notification appliances for occupant notification?	A.23.2.1
	What is the purpose of alarm annunciation?	10.18.1.1.2
	Where are the requirements to have occupant notification or staff notification?	18.1.1
	Which individuals are private operating mode signals intended to alert?	3.3.193.1
	What conditions must be satisfied to reduce or eliminate audible signaling?	18.4.4.2
	Why not use the same low frequency tone in all areas?	A.18.4.1.1
	Why are audibility measurements not required for textual (voice) signals?	18.4.1.6
	Does *NFPA 72* require intelligibility in all spaces? What guidance does the designer have to plan and designate acoustically distinguishable spaces (ADSs) and to determine which spaces should have intelligibility or not when other governing laws, codes, or standards, as noted in 18.4.11.3, do not stipulate?	18.4.11
	What is the purpose of the minimum and maximum mounting heights for wall-mounted visual notification appliances?	18.5.5.3
	Are the spacing requirements for corridors based on direct or indirect viewing of appliances?	18.5.5.6.4
	Must separate notification appliances always be used for non–fire functions?	A.23.8.4.7
Emergency Control	Where must the fire alarm and signaling system emergency control function interface device be located?	A.21.2.4
	Which code requires the installation of fire alarm initiating devices for Elevator Phase I Emergency Recall Operation?	21.3.1
	Are automatic fire alarm initiating devices required to be installed in elevator pits?	A.21.3.8
	What is the purpose of elevator shutdown?	21.4
Emergency Communications Systems	Do the codes require an MNS?	24.2.2
	What information should an effective emergency message contain?	24.2.3
	What are some basic issues that must be addressed by the MNS risk analysis?	24.3.12
	Can a loudspeaker be provided with a control that allows occupants to lower the volume?	24.5.15.2

Topic	FAQ	Section
Supervising Stations	When is a remote supervising station alarm system used?	3.3.291.3
	Why is it important to notify supervising station customers of changes in service?	A.26.2.7.1
	What important distinctions are involved when true central station service is provided?	A.26.3.2
	Can a listed central station also provide remote supervising station service?	A.26.5.3.1.4
	What are some of the duties that a runner may be asked to perform?	3.3.254
	How often must a DACT initiate a signal?	A.26.6.4.1.5(4)
	How can telephone lines connected to a DACR be monitored for integrity?	26.6.4.2.2
Household	Where is the requirement to have smoke detection established?	A.29.8.1.1(5)
	Does the Code permit the use of both smoke alarms and smoke detectors?	A.29.3.3
	What important changes have been made in the Code regarding requirements for interconnection of smoke alarms?	A.29.8.2.1.1
	What course of action is needed when the number of smoke alarms exceeds 12?	A.29.11.2.1
	Where is the requirement to have CO detection established?	A.29.7.1.1
	What is required when an alarm is powered by an AFCI circuit?	A.29.9.4(3)
	What are the periodic testing requirements for household fire alarm systems and smoke alarms?	A.29.6.3
	Does the 10-year replacement requirement apply to all smoke alarms?	29.13

Room Spacing for Wall-Mounted Visual Notification Appliances

Maximum Room Size		*Minimum Required Light Output [Effective Intensity (cd)]*	
ft	*m*	*One Visual Notification Appliance per Room*	*Four Visual Notification Appliances per Room (One per Wall)*
20 × 20	6.10 × 6.10	15	NA
28 × 28	8.53 × 8.53	30	NA
30 × 30	9.14 × 9.14	34	NA
40 × 40	12.2 × 12.2	60	15
45 × 45	13.7 × 13.7	75	19
50 × 50	15.2 × 15.2	94	30
54 × 54	16.5 × 16.5	110	30
55 × 55	16.8 × 16.8	115	30
60 × 60	18.3 × 18.3	135	30
63 × 63	19.2 × 19.2	150	37
68 × 68	20.7 × 20.7	177	43
70 × 70	21.3 × 21.3	184	60
80 × 80	24.4 × 24.4	240	60
90 × 90	27.4 × 27.4	304	95
100 × 100	30.5 × 30.5	375	95
110 × 110	33.5 × 33.5	455	135
120 × 120	36.6 × 36.6	540	135
130 × 130	39.6 × 39.6	635	185

NA: Not allowable.

TABLE 18.5.5.5.1(a)

Room Spacing for Ceiling-Mounted Visual Notification Appliances

Maximum Room Size		*Maximum Lens Height**		*Minimum Required Light Output (Effective Intensity); One Visual Notification Appliance (cd)*
ft	*m*	*ft*	*m*	
20 × 20	6.1 × 6.1	10	3.0	15
30 × 30	9.1 × 9.1	10	3.0	30
40 × 40	12.2 × 12.2	10	3.0	60
44 × 44	13.4 × 13.4	10	3.0	75
20 × 20	6.1 × 6.1	20	6.1	30
30 × 30	9.1 × 9.1	20	6.1	45
44 × 44	13.4 × 13.4	20	6.1	75
46 × 46	14.0 × 14.0	20	6.1	80
20 × 20	6.1 × 6.1	30	9.1	55
30 × 30	9.1 × 9.1	30	9.1	75
50 × 50	15.2 × 15.2	30	9.1	95
53 × 53	16.2 × 16.2	30	9.1	110
55 × 55	16.8 × 16.8	30	9.1	115
59 × 59	18.0 × 18.0	30	9.1	135
63 × 63	19.2 × 19.2	30	9.1	150
68 × 68	20.7 × 20.7	30	9.1	177
70 × 70	21.3 × 21.3	30	9.1	185

*This does not preclude mounting lens at lower heights.

TABLE 18.5.5.5.1(b)

nfpa.org/72

Visit the NFPA 72 document information page (http://www.nfpa.org/72) for up-to-date, document-specific information, including any issued Tentative Interim Amendments and Errata. The document information page also provides users with the option to register for an "Alert" feature to receive an automatic email notification when new updates and other information are posted regarding the documents.

Product Management: Debra Rose
Development and Production: Irene Herlihy
Copyediting: Ellen Cosgrove
Cover Design: Twist Creative Group

Interior Design: Cheryl Langway
Composition: Cenveo Publisher Services
Printing/Binding: Webcrafters

Copyright © 2018
National Fire Protection Association®
One Batterymarch Park
Quincy, Massachusetts 02169-7471

All rights reserved.

Important Notices and Disclaimers: Publication of this handbook is for the purpose of circulating information and opinion among those concerned for fire and electrical safety and related subjects. While every effort has been made to achieve a work of high quality, neither the NFPA® nor the contributors to this handbook guarantee or warrantee the accuracy or completeness of or assume any liability in connection with the information and opinions contained in this handbook. The NFPA and the contributors shall in no event be liable for any personal injury, property, or other damages of any nature whatsoever, whether special, indirect, consequential, or compensatory, directly or indirectly resulting from the publication, use of, or reliance upon this handbook.

This handbook is published with the understanding that the NFPA and the contributors to this handbook are supplying information and opinion but are not attempting to render engineering or other professional services. If such services are required, the assistance of an appropriate professional should be sought.

NFPA 72®, *National Fire Alarm and Signaling Code®* ("*NFPA 72*"), is, like all NFPA codes, standards, recommended practices, and guides ("NFPA Standards"), made available for use subject to Important Notices and Legal Disclaimers, which appear at the end of this handbook and can also be viewed at *www.nfpa.org/disclaimers*.

Notice Concerning Code Interpretations: This ninth edition of the *National Fire Alarm and Signaling Code® Handbook* is based on the 2019 edition of *NFPA 72*. All NFPA codes, standards, recommended practices, and guides ("NFPA Standards") are developed in accordance with the published procedures of the NFPA by technical committees comprised of volunteers drawn from a broad array of relevant interests. The handbook contains the complete text of *NFPA 72* and any applicable Formal Interpretations issued by the NFPA at the time of publication. This NFPA Standard is accompanied by explanatory commentary and other supplementary materials.

The commentary and supplementary materials in this handbook are not a part of the NFPA Standard and do not constitute Formal Interpretations of the NFPA (which can be obtained only through requests processed by the responsible technical committees in accordance with the published procedures of the NFPA). The commentary and supplementary materials, therefore, solely reflect the personal opinions of the editor or other contributors and do not necessarily represent the official position of the NFPA or its technical committees.

Reminder: Updating of NFPA Standards

NFPA 72, *National Fire Alarm and Signaling Code*, like all NFPA codes, standards, recommended practices, and guides ("NFPA Standards"), may be amended from time to time through the issuance of Tentative Interim Amendments or corrected by Errata. An official NFPA Standard at any point in time consists of the current edition of the document together with any Tentative Interim Amendment and any Errata then in effect. In order to determine whether an NFPA Standard has been amended through the issuance of Tentative Interim Amendments or corrected by Errata, visit the Document Information Pages on NFPA's website. The Document Information Pages provide up-to-date, document specific information including any issued Tentative Interim Amendments and Errata. To access the Document Information Page for a specific NFPA Standard go to http://www.nfpa.org/docinfo for a list of NFPA Standards, and click on the appropriate Standard number (e.g., *NFPA 72*). The document information page includes postings of all existing Tentative Interim Amendments and Errata. It also includes the option to register for an "Alert" feature to receive an automatic email notification when new updates and other information are posted regarding the document.

The following are registered trademarks of the National Fire Protection Association:

National Fire Protection Association®
NFPA®
National Fire Alarm and Signaling Code® and NFPA 72®
Building Construction and Safety Code® and NFPA 5000®
Fire Protection Handbook®
Life Safety Code® and 101®
National Electrical Code®, NEC®, and NFPA 70®

NFPA No.: 72HB19
ISBN (book): 978-1-4559-1-9741
ISBN (PDF): 978-1-4559-1-9734
ISBN (e-book): 978-1-4559-1-9727
Library of Congress Control No.: 2018940703

Printed in the United States of America
18 19 20 21 22 5 4 3 2 1

Contents

Preface vii

Acknowledgments xi

About the Contributors xiii

About the Editors xvii

***NFPA 72* Summary of Technical Changes: 2016 to 2019** T-1

***NFPA 72®, National Fire Alarm and Signaling Code®*, 2019 Edition, with Commentary** 1

1 Administration 3

1.1 Scope 3
1.2 Purpose 5
1.3 Application 7
1.4 Retroactivity 12
1.5 Equivalency 13
1.6 Units and Formulas 14
1.7 Code Adoption Requirements 14

2 Referenced Publications 17

2.1 General 17
2.2 NFPA Publications 17
2.3 Other Publications 18
2.4 References for Extracts in Mandatory Sections 20

3 Definitions 21

3.1 General 21
3.2 NFPA Official Definitions 21
3.3 General Definitions 23

4 Reserved 99

5 Reserved 99

6 Reserved 99

7 Documentation 101

7.1 Application (SIG-FUN) 101
7.2 Minimum Required Documentation (SIG-FUN) 102
7.3 Design (Layout) Documentation 106
7.4 Shop Drawings (Installation Documentation) (SIG-FUN) 114
7.5 Completion Documentation 116
7.6 Inspection, Testing, and Maintenance Documentation (SIG-TMS) 122
7.7 Records, Record Retention, and Record Maintenance 123
7.8 Forms 127

8 Reserved 189

9 Reserved 189

10 Fundamentals 191

10.1 Application 191
10.2 Purpose 192
10.3 Equipment 192
10.4 Design and Installation 193
10.5 Personnel Qualifications 196
10.6 Power Supplies 203
10.7 Signal Priority 219
10.8 Detection and Signaling of Conditions 220
10.9 Responses 221
10.10 Distinctive Signals 221
10.11 Alarm Signals 223
10.12 Fire Alarm Notification Appliance Deactivation 224
10.13 Carbon Monoxide (CO) Notification Appliance Deactivation 226
10.14 Supervisory Signals 226
10.15 Trouble Signals 228
10.16 Emergency Control Function Status Indicators 230
10.17 Notification Appliance Circuits and Control Circuits 230
10.18 Annunciation and Annunciation Zoning 231
10.19 Monitoring Integrity of In-Building Fire Emergency Voice/Alarm Communications Systems 234
10.20 Documentation and Notification 235
10.21 Impairments 235
10.22 Unwanted Alarms 237

11 Reserved 239

12 Circuits and Pathways 241

12.1 Application 241
12.2 General 242
12.3 Pathway Class Designations 246
12.4 Pathway Survivability 254
12.5 Shared Pathway Designations 258
12.6 Monitoring Integrity and Circuit Performance of Installation Conductors and Other Signaling Channels 260
12.7 Nomenclature 262

13 Reserved 265

14 Inspection, Testing, and Maintenance 267

14.1 Application 267
14.2 General 269
14.3 Inspection 283
14.4 Testing 296
14.5 Maintenance 357
14.6 Records 357

15 Reserved 361

16 Reserved 361

17 Initiating Devices 363

17.1 Application 365
17.2 Purpose 367
17.3 Performance-Based Design 367
17.4 General Requirements 368
17.5 Requirements for Smoke and Heat Detectors 375
17.6 Heat-Sensing Fire Detectors 385
17.7 Smoke-Sensing Fire Detectors 408
17.8 Radiant Energy–Sensing Fire Detectors 463
17.9 Combination, Multi-Criteria, and Multi-Sensor Detectors 480
17.10 Gas Detection 482
17.11 Other Fire Detectors 483
17.12 Carbon Monoxide Detectors 484
17.13 Sprinkler Waterflow Alarm-Initiating Devices 487
17.14 Detection of Operation of Other Automatic Extinguishing Systems 490
17.15 Manually Actuated Alarm-Initiating Devices 491
17.16 Fire Extinguisher Electronic Monitoring Device 494
17.17 Supervisory Signal–Initiating Devices 494

18 Notification Appliances 501

18.1 Application 501
18.2 Purpose 504
18.3 General 504
18.4 Audible Characteristics 512
18.5 Visual Characteristics — Public Mode 546
18.6 Visual Characteristics — Private Mode 570
18.7 Supplementary Visual Signaling Method 570
18.8 Textual Audible Appliances 571
18.9 Textual and Graphical Visual Appliances 572
18.10 Tactile Appliances 576
18.11 Standard Emergency Service Interface 576

19 Reserved 579

20 Reserved 579

21 Emergency Control Function Interfaces 581

21.1 Application 581
21.2 General 582
21.3 Elevator Phase I Emergency Recall Operation 585
21.4 Elevator Power Shutdown 598
21.5 Fire Service Access Elevators 601
21.6 Occupant Evacuation Elevators (OEE) 603
21.7 Heating, Ventilating and Air-Conditioning (HVAC) Systems 613
21.8 High Volume Low Speed (HVLS) Fans 617
21.9 Door and Shutter Release 617
21.10 Electrically Locked Doors 618
21.11 Exit Marking Audible Notification Systems 620

22 Reserved 621

23 Protected Premises Alarm and Signaling Systems 623

23.1 Application 624
23.2 General 625
23.3 System Features 628
23.4 System Performance and Integrity 631
23.5 Performance of Initiating Device Circuits (IDCs) 634
23.6 Performance of Signaling Line Circuits (SLCs) 634
23.7 Performance of Notification Appliance Circuits (NACs) 650
23.8 System Requirements 650
23.9 In-Building Emergency Voice/Alarm Communications 688
23.10 Fire Alarm Systems Using Tone 688

23.11 Suppression System Actuation 689
23.12 Off-Premises Signals 691
23.13 Guard's Tour Supervisory Service 691
23.14 Suppressed (Exception Reporting) Signal System 692
23.15 Protected Premises Emergency Control Functions 693
23.16 Special Requirements for Low-Power Radio (Wireless) Systems 693

24 Emergency Communications Systems (ECS) 701

24.1 Application 701
24.2 Purpose 702
24.3 General 703
24.4 In-Building Fire Emergency Voice/Alarm Communications Systems (EVACS) 721
24.5 In-Building Mass Notification Systems 733
24.6 Wide-Area Mass Notification Systems 751
24.7 Distributed Recipient Mass Notification Systems (DRMNS) 755
24.8 Two-Way, In-Building Wired Emergency Services Communications Systems 758
24.9 Two-Way Radio Communications Enhancement Systems 762
24.10 Area of Refuge (Area of Rescue Assistance) Emergency Communications Systems, Stairway Communications Systems, Elevator Landing Communications Systems, and Occupant Evacuation Elevator Lobby Communications Systems 763
24.11 Information, Command, and Control 768
24.12 Performance-Based Design of Mass Notification Systems 771
24.13 Documentation for Emergency Communications Systems 774

25 Reserved 775

26 Supervising Station Alarm Systems 777

26.1 Application 777
26.2 General 781
26.3 Central Station Service Alarm Systems 788
26.4 Proprietary Supervising Station Alarm Systems 806
26.5 Remote Supervising Station Alarm Systems 817
26.6 Communications Methods for Supervising Station Alarm Systems 826

27 Public Emergency Alarm Reporting Systems 867

27.1 Application 868
27.2 General 870
27.3 Management and Maintenance 871
27.4 Communications Methods 872
27.5 Alarm Processing Equipment 874
27.6 Alarm Boxes 891
27.7 Public Cable Plant 904
27.8 Emergency Communications Systems (ECS) 912

28 Reserved 913

29 Single- and Multiple-Station Alarms and Household Signaling Systems 915

29.1 Application 916
29.2 Purpose 918
29.3 Basic Requirements 920
29.4 Remote Annuncaition 921
29.5 Notification 921
29.6 Assumptions 929
29.7 Carbon Monoxide Detection 931
29.8 Detection and Notification 934
29.9 Power Supplies 941
29.10 Equipment Performance 949
29.11 Installation 960
29.12 Optional Functions 973
29.13 Inspection, Testing, and Maintenence 973
29.14 Markings and Instructions 974

Annexes

A Explanatory Material 977
B Engineering Guide for Automatic Fire Detector Spacing 979
C System Performance and Design Guide 1075
D Speech Intelligibility 1081
E Sample Ordinance Adopting *NFPA 72* 1125
F Wiring Diagrams and Guide for Testing Fire Alarm Circuits 1127
G Guidelines for Emergency Communication Strategies for Buildings and Campuses 1139
H Carbon Monoxide 1149
I Informational References 1153

Index 1163

Important Notices and Legal Disclaimers 1184

Preface

The 2019 edition of *NFPA 72®*, *National Fire Alarm and Signaling Code*, represents the culmination of over a century of signaling standards. The first signaling standard, NFPA 71-D, *General Rules for the Installation of Wiring and Apparatus for Automatic Fire Alarms, Hatch Closers, Sprinkler Alarms, and Other Automatic Alarm Systems and Their Auxiliaries,* was written in 1899. That document was only fifteen pages in length, including the committee report. We are certain the original framers of that document would be astonished to see what their work looks like today.

Fire alarm signaling has come a long way since NFPA published that first signaling standard over one hundred years ago. Many technologies related to fire alarm systems have evolved, while others have changed little since the middle part of the nineteenth century. For example, conventional fixed-temperature heat detectors and McCulloh loops have not changed significantly since they were invented in the late 1800s. Many technologies emerged in just the past thirty or forty years. More recent technologies, such as electronic addressable analog smoke detectors and analog heat detectors, continue to develop and improve. Additionally, the computer age has ushered in an era of major changes in fire alarm system control units. Software-driven system designs have resulted in fire alarm systems that are more flexible, richer in features, and easier to test and maintain.

As computer systems are becoming more sophisticated, fire alarm system designers are integrating these systems more with other building systems such as HVAC systems, security and access control systems, energy management systems, CO and mass notification systems. Requirements have been incorporated in the Code in an effort to keep pace with this ongoing evolution in integrated system designs and to preserve the integrity, reliability, and performance that are essential for fire alarm systems. Integration of these systems requires technicians from both the fire alarm and non–fire alarm system fields to possess a more detailed and functional knowledge of these Code requirements. Systems integration also requires a more complete understanding of the application and operation of the various building systems technologies and how they interact with fire alarm systems. Education will continue to play a critical role in the understanding and application of fire alarm systems and their integration with other building systems.

This edition of the *National Fire Alarm and Signaling Code* reflects a number of changes. The requirements for fire service access elevators and occupant evacuation elevators (OEE) were completely revised to coordinate with changes made in ASME A17.1/CSA B44. The requirements for occupant evacuation operation (OEO) are revised extensively. Annex text is added for clarification, as is Figure A.21.6, Simplified Occupant Evacuation Operation (OEO) (Elevator system interface with the building fire alarm system based on ASME A17.1, Section 2.27.11, and *NFPA 72*, Section 21.6). In addition to the requirements for area of refuge (area of rescue assistance), Chapter 24 is revised to include requirements for stairway communications systems, elevator landing communications systems, and occupant evacuation elevator lobby communications systems.

A review was accomplished and revisions made to ensure alignment of *NFPA 72* with the *Manual of Style for NFPA Technical Committee Documents*. These editorial revisions include the breakout of paragraphs with multiple requirements into individually numbered paragraphs for each requirement and the minimization of use of exceptions. For many years, when codes required visual (or visible) notification in addition to audible notification, strobe lights meeting

the requirements of Chapter 18 were used. With newer LED products that can be used for fire alarm, the terms *strobe, light*, and *visible* are essentially changed to *visual notification appliance*. The terms *speaker* and *high power speaker array (HPSA)* are changed to *loudspeaker* and *high power loudspeaker array (HPLA)* for consistency.

Perhaps the most significant change to the Code pertains to carbon monoxide. In August 2015, the Standards Council voted to relocate material that is in NFPA 720, *Standard for the Installation of Carbon Monoxide (CO) Detection and Warning Equipment,* to various chapters of *NFPA 72*. These requirements are essentially incorporated into Chapter 17 for carbon monoxide detectors; Chapter 14 for installation, testing, and maintenance; Chapter 29 for carbon monoxide alarms; and new Annex H. Chapter 29 is greatly expanded, and a significant amount of annex text has been added for explanation. NFPA 720 is to be withdrawn as the requirements are moved to *NFPA 72*.

Chapter 14, Inspection, Testing, and Maintenance, is greatly modified to incorporate valve-regulated lead-acid (VRLA) batteries. The inspection and testing requirements are revised in Tables 14.3.1 and 14.4.3.2. This also expands the annex language to address use and testing of these batteries. Several new terms are introduced, and these are defined in Chapter 3.

The 2016 edition of the Code continued to retain requirements for performance-based designs as they continue to play a more prominent part within the building process. The acceptance of performance-based designs on an equal footing with traditional prescriptive designs establishes an environment and incentive to perform much needed research. The fire alarm industry has and will continue to research and develop a better understanding of the metrics needed to model fire scenarios and predict detection system responses to those scenarios. More and more commonly, fire protection needs are served more effectively and precisely by performance-based approaches than by those based on the more traditional prescriptive rules. Performance-based approaches are not limited to fire detection and are becoming more widely used in the areas of audible and visual signaling and in the design of mass notification systems. This continued growth has been reflected within the Code both in terms of new requirements and in terms of information provided in the annexes in this handbook.

The 2016 edition of the Code added Class N, which addresses Internet infrastructures for alarm and signaling systems. Traditionally, the distributed components of a fire alarm system have connected using two-conductor cable. Such a cable interconnects all of the fire alarm initiating devices and fire alarm notification appliances to a fire alarm control unit using signaling line circuits (SLCs), initiating device circuits (IDCs), and notification appliance circuits (NACs). However, with the proliferation and availability of computer networks, we now live in an age where we "connect" to almost every communication device we use through Ethernet or other computer networks, and rigorous computer networks exist in many buildings. The Class N circuit includes two or more pathways that have their operational capability verified through end-to-end communication. The redundant path intends to compensate for Ethernet wiring that cannot meet all of the fault monitoring requirements that normally apply to traditional wiring methods used for fire alarm circuits. The use of these computer networks are permitted by the Code. Chapter 24, Emergency Communications Systems (ECS), was totally restructured, providing greater user friendliness while expanding the section on risk analysis. An emphasis is placed on the importance of effective message development. Annex G, Guidelines for Emergency Communication Strategies for Buildings and Campuses, which is based on research by the National Institute of Standards and Technology and the Fire Protection Research Foundation, was also added for the 2016 edition.

All of these changes have resulted from the work of over 200 technical committee members who have volunteered countless hours in the preparation and review of hundreds of inputs and comments — all evaluated through the NFPA consensus-based standards-making processes. The development of the Public Inputs and Public Comments processed by the

technical committees represents even further countless hours contributed by members of the public and the fire protection community. The preparation of both the Code and the handbook has also been the beneficiary of very significant time and care from dedicated NFPA staff members. All of these collective efforts, along with NFPA's rigorous public review process, have continued to make the *National Fire Alarm and Signaling Code Handbook* one of the best documents available in the world to detail the installation requirements for fire alarm and emergency communications systems.

Acknowledgments

The editors wish to thank Merton Bunker of Merton Bunker & Associates (commentary author for Chapters 12 and 23); Manuelita E. David, of JENSEN HUGHES (commentary author of Chapters 7 and 10); Daniel T. Gottuk, Ph.D., P.E., of JENSEN HUGHES (commentary author for Chapter 29 and Annex H); J. Jeffrey Moore, P.E., FSFPE, of JENSEN HUGHES (commentary author for Chapter 14); Wayne D. Moore, P.E., FSFPE, CFPS, SET, F.NSPE, of JENSEN HUGHES (commentary author for Chapter 24); Daniel J. O'Connor, P.E., of JENSEN HUGHES (commentary author for Chapter 17 and Annex B); Warren E. Olsen, CFPS, CBO, of FSCI-Fire Safety Consultants, Inc. (commentary author for Chapters 1, 3, and 26); Jack Poole (commentary author for Chapters 12, 21, and 23); and Robert P. Schifiliti, P.E., FSFPE, of R.P. Schifiliti Associates, Inc. (commentary author for Chapter 18 and Annex D). Their contributions have made this handbook truly exceptional.

The editors also wish to thank the many manufacturers whose expertise, generosity, and patience helped us to provide many new photographs for this edition.

We would also like to thank the production team of this handbook, including Debra Rose, product manager; Irene Herlihy, development, production, and permissions editor; Cheryl Langway, interior design and art production manager; Ellen Cosgrove, copy editor and proofreader.

The editors wish to thank Lynn Roux; Sarah, Olivia and Samantha Chase; and Heidi and Rebecca Coache for the love, patience, encouragement, and support they provided during the development of this handbook. This project could not have been completed without their support.

Richard J. Roux
Barry D. Chase
Christopher D. Coache

About the Contributors

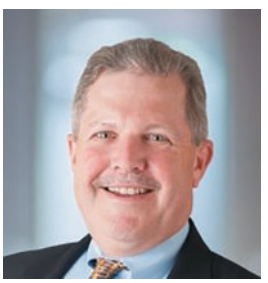

Merton Bunker (Chapters 12 and 23)

Merton Bunker has 32 years of engineering experience, including seven years at the National Fire Protection Association as staff liaison to *NFPA 72*. He is active in codes and standards development and is the Chair of the Signaling Systems for the Protection of Life and Property Correlating Committee. He holds a Bachelor of Science in Electrical Engineering and a Master of Science in Engineering Management. Mr. Bunker is a licensed professional engineer, a certified fire and explosion investigator, and a certified master electrical inspector.He is the president of Merton Bunker & Associates in Stafford, Virginia.

Manuelita E. David (Chapters 7 and 10)

Manuelita E. David is Director of the San Francisco Bay Area offices of JENSEN HUGHES and has 25 years of experience in the fire alarm industry. She currently serves as the chair of the *NFPA 72* Technical Committee on Fundamentals of Fire Alarm and Signaling Systems. Ms. David is an associate member of the Society of Fire Protection Engineers (SFPE), a member of the Northern California Fire Prevention Officers Association, and a member of the California Automatic Fire Alarm Association (CAFAA). She holds a Bachelor of Arts in industrial arts/computer-aided drafting from San Francisco State University and is NICET Level IV certified in fire protection engineering technology. Ms. David has also authored and co-authored numerous technical articles for industry publications.

Daniel T. Gottuk (Chapter 29 and Annex H)

Daniel T. Gottuk, P.E., PhD, is the Technical Director and Senior Vice President of Advanced Solutions at JENSEN HUGHES. He is a recognized expert with over 25 years of experience in fire detection and fire dynamics and is well published in the technical literature. Dr. Gottuk has evaluated fire development and fire protection systems in shipboard, residential, and industrial applications. He is past chair of the *NFPA 72* Technical Committee on Single- and Multiple-Station Alarms and Household Fire Alarm Systems, past chair of the NFPA 720 Technical Committee on Carbon Monoxide Detection, and a member of the NFPA 921 Technical Committee on Fire Investigations.

J. Jeffrey Moore (Chapter 14)

J. Jeffrey Moore, P.E., FSFPE, is a senior fire protection engineer for JENSEN HUGHES in Union (KY) near Cincinnati, where he is responsible for the design of all types of fire protection systems, including fire detection, fire alarm, and mass notification systems. He is past chair of the *NFPA 72* Technical Committee on Protected Premises Fire Alarm Systems and current chair of the *NFPA 72* Technical Committee on Inspection, Testing, and Maintenance. Prior to joining JENSEN HUGHES, Mr. Moore was a field engineer, district supervising engineer, and senior loss prevention training consultant for Industrial Risk Insurers, and later served as the fire protection engineer for Wright-Patterson Air Force Base near Dayton, Ohio. He has authored material for a number of fire protection handbooks and references, and has developed and taught fire protection and life safety seminars. Mr. Moore currently serves as an instructor for NFPA training seminars, including Fire Alarm Systems, Fire Alarm System Inspection, Testing and Maintenance, and for the SFPE seminar on Advanced Fire Alarm Systems Design.

Wayne D. Moore (Chapter 24)

Wayne D. Moore, P.E., CFPS, SET, FSFPE, F.NSPE, is a licensed professional fire protection engineer and is a vice president with the fire protection engineering and code-consulting firm, JENSEN HUGHES, in the firm's Warwick, Rhode Island office. Mr. Moore currently serves as a member and former chair of the *NFPA 72* Technical Committee on Emergency Communications Systems. He also serves on the NFPA 72 Correlating Committee. He is a former editor/co-editor of five editions of the *National Fire Alarm Code Handbook* and is author of *Designing Mass Notification Systems — A Pathway to Effective Communications*, published by NFPA. Mr. Moore is also the 2009 recipient of the NFPA Standards Medal and the 2012 Recipient of the AFAA Lifetime Achievement Award.

Daniel J. O'Connor (Chapter 17 and Annex B)

Daniel J. O'Connor, P.E., is Vice President for JENSEN HUGHES. He received his Bachelor of Science degree in fire protection engineering from the Illinois Institute of Technology in 1979 and his Master of Science degree in fire protection engineering from the University of Maryland in 1992. Mr. O'Connor is chair of the Society of Fire Protection Engineers' Task Group on Human Behavior and chair of the *NFPA 72* Technical Committee on Initiating Devices for Fire Alarm and Signaling Systems. He has also served as a member of six other NFPA technical committees that include NFPA *101* and NFPA *5000*. He has authored six Fire Protection Research Foundation projects in the areas of fire detection and fire suppression and is the recipient of the Research Foundation's Ronald K. Mengel Award for his work on smoke detection on deep beamed ceilings. Mr. O'Connor also has experience in research and testing of video smoke detection technology and the development of application guides for air aspirating smoke detection systems.

Warren E. Olsen (Chapters 1, 3, and 26)

Warren E. Olsen, CFPS, CBO, is a fire protection consultant with FSCI-Fire Safety Consultants, Inc., at the firm's Elgin, Illinois, headquarters, where he manages the building and life safety division. Mr. Olsen spent 30 years in the fire service, retiring as a battalion chief, and has more than 43 years' experience in fire protection. He is currently chair of the *NFPA 72* Technical Committee on Supervising Station Fire Alarm and Signaling Systems and is a technical committee member on NFPA 3 and 4. Previously, he served on the Technical Committee for Notification Appliances for Fire Alarm and Signaling Systems. Mr. Olsen teaches seminars on the *National Fire Alarm and Signaling Code* for NFPA and FSCI, as well as seminars on NFPA 3 and 4. He holds a Bachelor of Science degree in fire service management from Southern Illinois University and is a certified fire protection specialist and certified building code official.

Jack Poole (Chapters 12, 21, and 23)

Jack Poole, P.E., FSFPE, is a Principal of Poole Fire Protection, Inc. in Olathe, Kansas. Mr. Poole graduated from the University of Maryland in 1986 with a Bachelor of Science Degree in Fire Protection Engineering and is a registered Professional Engineer (PE) in Fire Protection, licensed in 49 states and 3 territories. His expertise includes building and fire-code consulting and designing fire suppression and fire alarm & detection systems. He was a volunteer firefighter and Fire Marshal, currently serves as the SFPE Secretary-Treasurer on the Board of Directors, is an SFPE Fellow, serves on the NFPA Standards Council, several NFPA Technical Committees, is Chairman of NFPA 72 SIG-PRO and NFPA 520, serves on the Curriculum Advisory Committee and is the Chairman of the Board of Visitors for the University of Maryland Fire Protection Engineering Department and the Chairman of the Oklahoma State Fire Protection and Safety Engineering Technology Industrial Advisory Board. Mr. Poole received the Glenn L. Martin Medal from the University of Maryland in 2014, was honored as a Distinguished Alumni from the Department of Fire Protection Engineering in June of 2015 and received the John L. Bryan Mentoring Award from SFPE in 2016.

Robert P. Schifiliti (Chapter 18 and Annex D)

Robert P. Schifiliti, P.E., FSFPE, is a licensed fire protection engineer and holds a Master of Science degree in fire protection engineering from Worcester Polytechnic Institute. He has over 38 years' experience in fire protection and prevention work, having developed expertise and focused his engineering practice on the design, analysis, and forensic investigation of fire detection, alarm, and signaling systems. Mr. Schifiliti is a current member and past chair (2006 – 2016) of the *NFPA 72* Signaling Systems for the Protection of Life and Property Correlating Committee. He is a member of the *NFPA 72* Technical Committee on Notification Appliances, which he chaired from 1993 to 2003. Previously he was a member of the Technical Committee on Initiating Devices for Fire Alarm and Signaling Systems

and chaired the Task Group on Automatic Detector Spacing. Mr. Schifiliti is also a member of the NFPA Technical Committee on Commissioning and Integrated Testing (NFPA 3 and NFPA 4). He is a past chair of the Fire Protection Research Foundation's Detection and Alarm Research Council and past chair of the Council's Research Planning Committee. In addition to this handbook, he is a contributing author to the *Commissioning and Integrated System Testing Handbook*, the *Fire Protection Handbook®,* and past editions of the *Life Safety Code Handbook*. For 25 years Mr. Schifiliti served as one of several faculty for NFPA's Fire Alarm Workshops, was the prime developer of previous workshops, and was a technical consultant for the 2013 edition's seminar and on-line training modules.

About the Editors

Richard J. Roux

Richard J. Roux, MSFPE, SET, FAI, FAM, is senior electrical specialist at NFPA. He is secretary to the NFPA 72 Correlating Committee on Signaling Systems for the Protection of Life and Property. He serves as staff liaison to several NFPA technical committees, including *NFPA 72®, National Fire Alarm and Signaling Code®*; NFPA 720, *Standard for the Installation of Carbon Monoxide (CO) Detection and Warning Equipment;* NFPA 730, *Guide for Premises Security*; NFPA 731, *Standard for the Installation of Electronic Premises Security Systems* and NFPA 780, *Standard for the Installation of Lightning Protection Systems*. He joined NFPA after 25 years in the fire detection systems field. Mr. Roux is licensed in Massachusetts and is NICET Level IV certified, IMSA Level II certified in both municipal fire alarm and interior fire alarm. He is a member of SFPE, IMSA, and AFAA. Mr. Roux is developer of several NFPA 72 classroom and on line training programs. He serves as one of several faculty for the NFPA Fire Alarm Workshop, moderator for several IMSA Fire Alarm Certification Programs, and was the technical editor for NFPA's video entitled *Inspection and Testing of Fire Alarm Systems*. He is co-author of NFPA's reference book, *NFPA Pocket Guide to Fire Alarm System Installation*, and has been editor and reviewer for many book projects. He is editor of *Designing Mass Notification Systems — A Pathway to Effective Emergency Communications.* He has written numerous articles on fire alarm systems and authored several fire alarm feature columns.

Barry D. Chase

Barry Chase is a senior fire protection engineer at NFPA, specializing in fire alarm and extinguishing systems. He provides technical and administrative support for *NFPA 72®*, *National Fire Alarm and Signaling Code®*, and serves as staff liaison to the technical committees responsible for NFPA 12, *Standard on Carbon Dioxide Extinguishing Systems*; NFPA 12A, *Standard on Halon 1301 Fire Extinguishing Systems*; NFPA 2001, *Standard on Clean Agent Fire Extinguishing Systems*; NFPA 770, *Standard on Hybrid (Water and Inert Gas) Fire Extinguishing Systems*; NFPA 2010, *Standard for Fixed Aerosol Fire-Extinguishing Systems*; and NFPA 70B, *Recommended Practice for Electrical Equipment Maintenance*. Mr. Chase has also worked extensively on the standards for automatic sprinklers, foam systems, portable extinguishers, and aviation facilities. He holds a Bachelor of Science in Mechanical Engineering from the University of Massachusetts Dartmouth and a Master of Science in Fire Protection Engineering from Worcester Polytechnic Institute. Prior to joining NFPA, Mr. Chase worked as both an applications engineer and an equipment design engineer for a fire protection systems manufacturer. He lives in New Bedford, MA with his family and is distinguished as the only NFPA employee that keeps a guitar in his workspace.

Christopher D. Coache

Christopher D. Coache is senior electrical engineer at NFPA. He has been involved in various aspects of public, personal, product and electrical safety for over 30 years. Mr. Coache has participated in national and international standards development. He serves as the staff liaison for NFPA 73, *Standard for Electrical Inspections for Existing Dwellings*; NFPA 110, *Standard for Emergency and Standby Power Systems*; NFPA 111, *Standard on Stored Electrical Energy Emergency and Standby Systems*; NFPA 780, *Standard for the Installation of Lightning Protection Systems*; and *NFPA 70E®, Standard for Electrical Safety in the Workplace®*. He is also an editor of the *National Electrical Code® Handbook* and the *Handbook for Electrical Safety in the Workplace*. Mr. Coache is a member of International Association of Electrical Inspectors (IAEI) and IEEE.

NFPA 72 Summary of Technical Changes: 2016 to 2019

This table provides an overview of major code changes from the 2016 to the 2019 edition of *NFPA 72®*, *National Fire Alarm and Signaling Code®*. Purely editorial and formatting changes are not included. For more information about the reasons for each change, visit www.nfpa.org/72. The first revision (FR), first correlating revision (FCR), second revision (SR), and second correlating revision (SCR) numbers are given in the third column for reference to the official documentation of the technical committee's actions.

Section Number	*Comments*	*FR/FCR/SR/SCR Reference*
Global Changes		
N/A	The term *visual notification appliance* is now used consistently throughout the Code and replaces the terms *visible notification appliance* and *strobe*. This improves correlation between chapters and permits the application of new technologies.	**Multiple**
N/A	The terms *actuated* and *activated* are applied consistently throughout the document to improve correlation between chapters.	**Multiple**
N/A	The terms *speaker* and *loudspeaker* are applied consistently throughout the document to improve correlation between chapters.	**Multiple**
N/A	*Exceptions* have been eliminated throughout the Code, in accordance with the NFPA *Manual of Style*.	**Multiple**
N/A	The term *manufacturer's published instructions* is applied consistently throughout the document to improve correlation between chapters.	**Multiple**
N/A	The term *uninterruptible power supply (UPS)* is replaced with *energy storage system (ESS)* for consistency.	**Multiple**
Chapter 1 Administration		
1.1.1	Carbon monoxide detection is incorporated from NFPA 720, *Standard for the Installation of Carbon Monoxide (CO) Detection and Warning Equipment*.	**FR 1004**
1.1.3	Carbon monoxide detection is incorporated from NFPA 720.	**FR 1003**
1.2.1	Carbon monoxide detection is incorporated from NFPA 720.	**FCR 47**
1.3.1	Carbon monoxide detection is incorporated from NFPA 720.	**FR 1007**
1.3.5	The text establishes a general overview of the applicability of chapters, which was previously stated in each individual chapter.	**FR 1001**

Section Number	Comments	FR/FCR/SR/SCR Reference
Chapter 2 Referenced Publications		
Chapter 3 Definitions		
3.3.3 Accessible, Readily (Readily Accessible).	This definition is updated in accordance with the 2017 edition of *NFPA 70®, National Electrical Code®*.	**FR 1013**
3.3.11.1 Carbon Monoxide Alarm.	Carbon monoxide detection is incorporated from NFPA 720.	**FR 1502**
3.3.12.3 Manual Fire Alarm Box.	New annex material alerts the user to the various terms used to describe manual fire alarm boxes.	**SR 2002**
3.3.31 Battery.	New definitions introduce correct battery terminology from the industry.	**FR 4504** **SR 4501** **SR 4502**
[deleted]	The definition of *building fire safety plan* was deleted. This term is no longer used in *NFPA 72*.	**FR 503**
3.3.34 Building System Information Unit (BSIU).	This term is used in Chapter 23.	**FR 3039**
3.3.35 Carbon Monoxide Detection System.	Carbon monoxide detection is incorporated from NFPA 720.	**FCR 42**
3.3.41 Cell.	New definitions introduce correct battery terminology from the industry.	**FR 4529**
3.3.69 Design Professional.	This definition is consistent with that in NFPA 3.	**SR 530**
3.3.86 Electromechanical Releasing Device.	This definition clarifies the limited use of this technology.	**FR 4520**
3.3.95 Emergency Response Agency (ERA).	This term is extracted from NFPA 1221, *Standard for the Installation, Maintenance, and Use of Emergency Services Communications Systems,* and is used in A.26.5.3.	**FR 4003**
3.3.99 Energy Storage Systems (ESS).	New definitions introduce correct energy storage terminology and technology from the industry.	**FR 1051**
3.3.111.4.1 Building Fire Alarm System.	The revised definition more clearly indicates that the purpose of a building fire alarm system is to provide notification, no matter who receives the signal.	**FR 3040**
3.3.132 High Volume Low Speed (HVLS) Fan.	This term is used in Section 21.8. Control of HVLS fans is required to coordinate with NFPA 13, *Standard for the Installation of Sprinkler Systems*.	**SR 3008**
3.3.137 Immediately (as used in Chapter 26).	This term had been defined in annex material and is moved to the main body of the standard.	**FR 4027**
3.3.139 In Writing.	Revised annex material better explains the intended nature of written correspondence.	**SR 1006**
3.3.150 Life Safety Network.	The broadened definition includes systems used for purposes beyond fire safety and is differentiated from the definition of a "combination system" because at least two of the networked systems are used for life safety.	**FR 3041** **SR 3009**

Section Number	*Comments*	*FR/FCR/SR/SCR Reference*
3.3.161 Managed Facilities-Based Voice Network (MFVN).	The broadened definition of MFVN clarifies that the public-switched telephone network (PSTN) is one type of MFVN.	**FR 4032**
3.3.189 Off-Hook.	The revised definition is consistent with the usage of this term in Chapters 24 and 26.	**SR 4038** **SCR 10**
3.3.242 Relocation.	The definition is broadened to include movement of occupants for reasons other than fire.	**FR 3042**
3.3.258 Separate Sleeping Area.	The added annex material clarifies where separate sleeping areas might be located in a dwelling unit.	**FR 1503**
3.3.290 Supervising Station.	The definition is broadened to include other types of alarm systems, including residential fire, carbon monoxide, and security.	**SCR 15**
3.3.325 Wireless Mesh Network (WMN) (as used in Chapter 26).	A wireless mesh network is one method of implementing a private one-way radio alarm system. The definition does not apply to mesh networks used for other than supervising station service.	**FR 4007** **SR 4002**
3.3.328.1 Notification Zone.	Portions of the definition that were redundant to 23.8.6.3.2 have been removed. The definition is expanded to include areas outside the building for mass notification systems.	**FR 3043**
3.3.328.2 Signaling Zone.	The revised definition more clearly indicates the difference between a notification zone and a signaling zone. Additional annex material provides an example to illustrate this distinction.	**FR 545** **SR 517**
Chapter 4 Reserved		
Chapter 5 Reserved		
Chapter 6 Reserved		
Chapter 7 Documentation		
7.1.4	Chapter 29 now requires compliance with some portions of Chapter 7.	**SCR 13**
7.2.1	The list of system types is removed, as the requirement applies to all new and modified systems of any type. In item (7), the term *de-rating* is replaced by *safety margin* to correlate with Chapter 10. In item (11), locations and candela ratings of alarm notification appliances are added to correlate with fire codes. In item (12), the requirement to determine the pathway between the protected premises and the supervising station is removed, as these often change. New annex material provides additional guidance on documenting the pathway.	**FR 1027** **FR 1028** **SR 1032**
7.3.2	Layout documents should be required before alteration of existing systems and not only for new installations.	**FR 547**
7.3.3	New requirements ensure that design bid documents include adequate and accurate details.	**FR 548** **SR 503**
7.3.7.4	The cross-reference alerts the user to documentation requirements that are not in Chapter 7.	**FR 1029**
7.5.6.6.1	The revised requirement more clearly identifies that the as-built documentation supplements the original documentation, which should be retained as part of the system record.	**SR 1034**

Section Number	Comments	FR/FCR/SR/SCR Reference
7.7.2.3	Documentation should not be stored inside the control unit cabinet because it can present a fire hazard. This was previously recommended in the annex and has been made mandatory.	FR 1031
7.8.2	Lines for carbon monoxide detection are added to Figure 7.8.2(a) and Figure A.7.8.2(1)(a), as carbon monoxide detection is incorporated from NFPA 720.	SR 1036
A.7.8.2(1)	The figures are updated to provide more thorough examples of completed forms.	SR 1054
Chapter 8 Reserved		
Chapter 9 Reserved		
Chapter 10 Fundamentals		
10.4.4	Maximum and minimum mounting heights for alarm control unit displays are added to ensure visibility and access. This aligns with other industry standards.	FR 1017 SR 1003
10.4.5 and 10.4.6	Dedicated function fire alarm systems that are not required to provide notification signals are not required to have early warning fire detection at the location of the control unit.	FR 1018 SR 1026
10.5.1.1	The requirement applies to the plans and specifications prepared for any type of signaling system, including carbon monoxide detection systems.	FR 1019 SR 1027
10.5.2.1	The requirement applies to personnel installing any type of signaling system, including carbon monoxide detection systems.	FR 1020 SR 1029
10.5.4.1 and 10.5.4.2	The requirements apply to personnel reviewing or inspecting any type of signaling system, including carbon monoxide detection systems.	SR 1030
10.6.1	The requirements of this section apply to power supplies used in any type of signaling system, including carbon monoxide detection systems. New annex material identifies exceptions.	FR 1035 SR 1011
10.6.4	The revised text adopts the more general term *energy storage system* and allows for reduced energy storage capacity when used in conjunction with a Legally Required Standby System in accordance with Article 700 of *NFPA 70*.	FR 1036 SR 1012
10.6.5.1	The requirements of this section apply to branch circuits supplying any type of signaling system, including carbon monoxide detection systems. New annex material explains which loads can and cannot be supplied by the branch circuit that supplies the signaling system equipment.	FR 1038 SR 1013
10.6.5.2.2	The requirements of this section apply to branch circuits supplying any type of signaling system, including carbon monoxide detection systems. Examples of markings are relocated to the annex.	FR 1039 SR 1014
10.6.6.3.1 and 10.6.6.3.2	The revised text adopts the more general term *energy storage system*.	FR 1037
10.6.7.2.3 and 10.6.7.2.4	Carbon monoxide detection is incorporated from NFPA 720.	FR 1041 SR 1017
A.10.6.10	The revised text uses correct terminology for battery technologies.	FR 1048
A.10.6.10.3.4	The revised text better describes the practice used for charging batteries.	FR 1050

Section Number	*Comments*	*FR/FCR/SR/SCR Reference*
10.6.11.7	The battery and charger used for starting the engine-driven generator must be sized in accordance with NFPA 110, *Standard for Emergency and Standby Power Systems*.	**FR 1044**
10.10.1	Carbon monoxide detection is incorporated from NFPA 720.	**FR 1021**
10.10.9	Carbon monoxide detection is incorporated from NFPA 720.	**FR 1034**
10.13 Carbon Monoxide (CO) Notification Appliance Deactivation.	Carbon monoxide detection is incorporated from NFPA 720.	**SR 1004**
10.17.3	The revised text establishes similar requirements for notification appliance circuit (NAC) extender panel control circuits as currently exist for addressable notification appliance signaling line circuits (SLCs) and individual NACs.	**SR 1007**
Chapter 11 Reserved		
Chapter 12 Circuits and Pathways		
12.2.3.3	Article 728 of *NFPA 70* contains requirements for the installation of wiring methods that resist attack by fire.	**FR 3069**
12.3.8	Pathway separation requirements are applicable to Class N circuits, which have redundant pathways.	**FR 3002**
12.4.2	Metal armored cables are suitable to achieve Level 1 pathway survivability.	**FR 3001**
A.12.4.3	The new text explains concerns regarding the use of notification appliances that are not capable of resisting attack by fire.	**SR 3050**
Chapter 13 Reserved		
Chapter 14 Inspection, Testing, and Maintenance		
14.1.2	Carbon monoxide detection is incorporated from NFPA 720.	**SR 1538**
A.14.2.2.1.2	New annex material provides guidance on responding to signals received during testing that are not related to the test performed.	**SR 4507**
A.14.2.10	The formulation of a test plan should a coordinated effort between the building owner and the person or organization that is contracted to perform the work.	**SR 4513**
14.3.1	Table 14.3.1 is revised to state the requirements more clearly, to include new battery technologies, to clarify that primary batteries installed in wireless devices are not required to be visually inspected, and to incorporate carbon monoxide detection from NFPA 720.	**FR 4533** **SR 4521**
14.4.3.2	Table 14.4.3.2 is revised to state the requirements more clearly, to include new battery technologies, and to incorporate carbon monoxide detection from NFPA 720. New annex material related to Items 9(4) and 9(5) in Table 14.4.3.2 provides guidance on properly conducting newly introduced test methods. New material related to Item 17 in Table 14.4.3.2 addresses the need to take into account manufacturer tolerances for equipment operability, especially where environmental conditions are not optimal.	**FR 4534** **FR 4524** **SR 4522**

Section Number	*Comments*	*FR/FCR/SR/SCR Reference*
14.4.3.5	Carbon monoxide detection is incorporated from NFPA 720.	**FR 4510** **SR 4509**
14.4.4.5.5	Carbon monoxide detection is incorporated from NFPA 720.	**FR 4511**
14.4.5	Carbon monoxide detection is incorporated from NFPA 720. Occupants are permitted to perform inspection, testing, and maintenance on residential alarms.	**FR 1533** **FR 4519** **FR 5050** **SR 1517**
14.4.6	Carbon monoxide detection is incorporated from NFPA 720. Occupants are permitted to perform inspection, testing, and maintenance on residential alarms.	**FR 1534** **SR 1565**
14.4.8	Carbon monoxide detection is incorporated from NFPA 720.	**FR 4513** **SCR 19**
Chapter 15 Reserved		
Chapter 16 Reserved		
Chapter 17 Initiating Devices		
17.1.1	Carbon monoxide detection is incorporated from NFPA 720.	**FR 2010** **SR 2001**
17.4.2	Carbon monoxide detection is incorporated from NFPA 720.	**FR 2011** **SR 2009**
17.4.6	Carbon monoxide detection is incorporated from NFPA 720.	**FR 2012** **FR 2013**
17.6.1.4	Heat detectors are required to be listed.	**FR 2014** **SR 2003**
17.6.2.1	The SI temperatures (°C) in Table 17.6.2.1 are corrected. The table footnote is moved to A.17.6.2.3.	**FR 2001** **SR 2006** **SR 2037 (A.17.6.2.3)**
A.17.6.3.5.1	The revised text clarifies that Table 17.6.3.5.1 applies only to spot-type heat detectors.	**SR 2008**
17.7.1.9	Smoke detectors installed in ducts and other locations with air velocities greater than 300 ft/min must be listed for those air velocity environments.	**FR 2015**
17.7.2.2	The revised text clarifies that this requirement does not apply to high-sensitivity aspirated smoke detectors.	**FR 2016**
17.7.3.6	The section is completely revised and expanded to provide additional guidance for air sampling-type smoke detection systems.	**FR 2008** **SR 2014**
17.10.1	The revised text clarifies that the requirements for gas detectors in Section 17.10 do not apply to carbon monoxide detectors. Requirements for carbon monoxide detection are located in new Section 17.12.	**FR 2021**
17.12 Carbon Monoxide Detectors.	Carbon monoxide detection is incorporated from NFPA 720.	**FR 2018** **SR 2012** **SR 2004** **SR 2013**

Section Number	*Comments*	*FR/FCR/SR/SCR Reference*
17.17.2.2.2	Some dry pipe valves are designed for a normal air pressure of approximately 15 psi (100 kPa). A pressure loss of 10 psi (70 kPa) in these systems could result in system discharge. The low air pressure signal must be initiated before the valve opens. The annex material is revised to be consistent with NFPA 13 and the range of low air pressure dry systems.	**FR 2023** **SR 2023**
Chapter 18 Notification Appliances		
18.4.2.1	The technical requirements of ANSI/ASA S3.41 are no longer needed here, as compliance with the standard is addressed through the listing.	**FR 2514** **SR 2504**
18.4.3	Carbon monoxide detection is incorporated from NFPA 720.	**FCR 1** **SR 2512**
A.18.4.4	The average ambient sound levels for several occupancy types are revised in accordance with data from the U.S. Department of Health and Human Services.	**FR 2530**
18.4.6.3	The square wave requirement was deleted to correlate with 29.4.9.1 and UL 464, *Audible Signaling Devices for Fire Alarm and Signaling Systems, Including Accessories*.	**SR 2525**
18.4.9.4	Carbon monoxide detection is incorporated from NFPA 720.	**FCR 2**
18.5.3.2 and 18.5.3.3	The maximum duty is deleted because it was a redundant requirement. Testing performed by the UL STP Task Group indicates that equivalent alerting can be achieved with a pulse duration greater than 20 milliseconds by increasing the candela output to compensate for the longer pulse duration.	**FR 2519** **SR 2526**
18.5.3.8	Carbon monoxide detection is incorporated from NFPA 720.	**FR 2521**
A.18.5.5.5.1	Research has shown that ambient lighting plays an important part in visual notification appliance performance. Annex material is added to provide support for the selection of visual notification appliances for various ambient lighting conditions.	**SR 2520**
18.5.5.8	Carbon monoxide detection is incorporated from NFPA 720.	**FCR 3** **SR 2515** **SR 2516** **SR 2517**
18.9.4.7	Table 18.9.4.7 is reformatted for ease of use and compliance with the NFPA *Manual of Style*.	**SR 2518**
Chapter 19 Reserved		
Chapter 20 Reserved		
Chapter 21 Emergency Control Function Interfaces		
A.21.2.4	Expanded annex material clarifies the distinction between supervised circuits and control function circuits.	**FR 3017**

Section Number	*Comments*	*FR/FCR/SR/SCR Reference*
21.3 Elevator Phase I Emergency Recall Operation.	The section is revised to be consistent with ANSI/ASME A17.1/CSA B44, *Safety Code for Elevators and Escalators*. A new requirement for accessibility of initiating devices improves worker safety.	**FR 3027 (21.3.6)** **SR 3035 (21.3.6)** **FR 3014 (21.3.7)** **FR 3028 (21.3.8)** **SR 3036 (21.3.8)** **FR 3029 (21.3.9)** **SR 3037 (21.3.9)** **SR 3016 (21.3.14)** **FR 3022 (21.3.14.1)** **SR 3017 (21.3.14.1)** **FR 3023 (21.3.14.2)** **FR 3024 (21.3.14.3)**
21.4 Elevator Power Shutdown.	The section is revised to be consistent with ANSI/ASME A17.1/CSA B44.	**FR 3030** **SR 3038** **SR 3039**
21.5 Fire Service Access Elevators.	The allowance to display elevator status was deleted because the fire alarm system does not monitor elevator position, direction of travel, or location. Revisions to the remaining text and associated annex material simplify and clarify the requirement to be used in conjunction with Section 21.6.	**FR 3031** **SCR 23**
21.6 Occupant Evacuation Elevators (OEE).	The section is completely revised to be consistent with ANSI/ASME A17.1/CSA B44.	**FR 3012** **SR 3023**
21.8 High Volume Low Speed (HVLS) Fans.	Control of HVLS fans is required to coordinate with NFPA 13.	**FR 3013** **SR 3042**
Chapter 22 Reserved		
Chapter 23 Protected Premises Alarm and Signaling Systems		
Chapter title	Carbon monoxide detection is incorporated from NFPA 720.	**SR 3028**
23.1.1	Carbon monoxide detection is incorporated from NFPA 720.	**FR 3034** **SR 4527**
23.2.1	Carbon monoxide detection is incorporated from NFPA 720.	**FR 3035**
23.2.2.1.1	Carbon monoxide detection is incorporated from NFPA 720.	**SR 3046**
23.2.3	Carbon monoxide detection is incorporated from NFPA 720.	**FR 3045**
A.23.3.1	Coordination between trades is necessary to ensure that maintenance of other network systems does not cause unintended consequences to the life safety network.	**SR 3063**
23.3.3.1	Carbon monoxide detection is incorporated from NFPA 720.	**FR 3036** **SR 3047**
23.6.1.3	The limitations of 23.6.1 should not be retroactively applied to existing circuits that are being modified.	**FCR 15** **SR 3018**
23.6.2	The numbering of the sections has been reordered to present the requirements more clearly. Paragraph 23.6.2.2 clarifies that multiple devices are only required if ground faults could affect the devices. Paragraph 23.6.2.3 addresses the termination for endpoint devices. New annex material throughout this section explains the intent of these requirements.	**FCR 44** **SR 3060**

Section Number	*Comments*	*FR/FCR/SR/SCR Reference*
23.6.3	The Technical Committee revises the text and clarifies that the accessibility requirements apply to all Class N pathways. The use of shared pathway Level 1 or Level 2 requires a risk analysis including the additional items outlined in 23.6.3.3 through 23.6.3.8. New requirements for equipment rooms ensure that the information technology equipment spaces used for life safety network systems are consistent with the design criteria. Expanded requirements for the network risk analysis describes the content and characteristics of risk. New annex material throughout this section explains the intent of these requirements.	**FR 3003** **SR 3021** **SR 3022** **SR 3020** **SCR 26** **SR 3026** **SR 3029** **SR 3030** **SR 3031** **SR 3032** **SR 3033** **SR 3034**
23.8.2	Carbon monoxide detection is incorporated from NFPA 720.	**SR 3052**
23.8.3	Carbon monoxide detection is incorporated from NFPA 720.	**FR 3008** **SR 3048**
23.8.4.2	The new section establishes requirements for the use of a building system information unit (BSIU) in conjunction with the fire alarm system.	**FR 3010**
23.8.4.9	Carbon monoxide detection is incorporated from NFPA 720.	**FR 3057** **SCR 17**
23.8.5.12	The requirement had applied only to disconnect switches associated with suppression systems. It now applies to any disconnect switch associated with the fire alarm system.	**FR 3015**
23.8.6	Carbon monoxide detection is incorporated from NFPA 720.	**FR 3060** **SR 3053**
23.9 In-Building Emergency Voice/Alarm Communications.	Carbon monoxide detection is incorporated from NFPA 720.	**SR 3054**
23.15.6	Carbon monoxide detection is incorporated from NFPA 720.	**SR 3056**
23.16.2	The use of two independent, monitored primary battery sources that are each capable of serving the load is a reasonable means of limiting the effect of a catastrophic (open or short) single battery failure.	**FR 3009**
23.16.3	There is no need to continue to transmit an alarm signal once it has been received by the control unit because alarm signals must be latched at the control unit. This allowance could reduce power consumption from battery-operated devices during system testing.	**FR 3011**
Chapter 24 Emergency Communications Systems (ECS)		
24.3.6.2	Prerecorded messages must be in the prevailing language of the country/location where the system is installed, must be documented on the permit plans before the programming of these messages into the emergency voice communications system (EVACS or MNS, etc.), and must be approved by the AHJ.	**SR 521**
A.24.3.7.1	Other codes reference *NFPA 72* for EVACS design and installation. When both an EVACS and an MNS are required because of a risk analysis, there is opportunity to interface or combine these systems.	**FR 541**

Section Number	Comments	FR/FCR/SR/SCR Reference
24.3.7.2	Terminology for types of two-way communications systems are aligned with that used in national building codes.	**SR 504**
24.3.10	ANSI/UL 2017, *Standard for General-Purpose Signaling Devices and Systems*, is deleted from the list because it addresses both emergency and non-emergency systems. Its scope is too broad for mass notification systems. The revised annex material clarifies the relationship between these listing standards.	**FR 508** **FR 509** **SR 524**
24.3.11	The new section establishes requirements for the use of a building system information unit (BSIU) in conjunction with the fire alarm system.	**FR 507**
24.3.12.1.1	The allowance to reuse an existing risk analysis reduces the burden of implementing these systems on multibuilding campuses.	**FR 525**
[deleted]	Requirements for two-way radio communications enhancement systems were deleted. They are now in NFPA 1221.	**FR 511**
24.4.8.4	The temporal-3 signal applies to partial evacuation.	**FR 515**
A.24.5.4.1	Expanded annex material provides an example of an alternate method.	**FR 544** **SR 508**
24.5.24.2	Where a public address system is used for emergency communications, it is the responsibility of the system designer to document that the system either complies with Chapter 24 or provides equivalent performance, as permitted by Section 1.5. The need to consider secondary power is added to the annex material as a related consideration when intending to use a public address system for emergency communications.	**FR 543** **SR 509**
A.24.7	The annex is updated to use current industry terms and to address the capabilities of a distributed recipient mass notification system to track and report progress and responses.	**FR 535** **SR 528**
[deleted]	The requirement for telephone appliances to comply with EIA Tr 41.3 was deleted. The referenced publication is no longer available.	**SR 531**
[deleted]	Requirements for approval and permitting of public safety radio enhancement systems were deleted. Requirements for two-way radio communications enhancement systems are now in NFPA 1221.	**FR 512**
24.10 Area of Refuge (Area of Rescue Assistance) Emergency Communications Systems, Stairway Communications Systems, Elevator Landing Communications Systems, and Occupant Evacuation Elevator Lobby Communications Systems.	The revised section is aligned with the requirements of national building codes.	**SR 516**

Section Number	*Comments*	*FR/FCR/SR/SCR Reference*
[deleted]	Requirements for elevator emergency communications systems were deleted. They are covered by ANSI/ASME A17.1.	**SR 505**
[deleted]	The requirements for stairway communications systems are incorporated into Section 24.10.	**SR 506**
Chapter 25 Reserved		
Chapter 26 Supervising Station Alarm Systems		
Chapter 26	With regard to supervising station systems, references to the *public switched telephone network (PSTN)* are replaced by *managed facilities-based voice network (MFVN)* to permit the use of alternative communications technologies in anticipation of the discontinuation of the PSTN. Since the PSTN is an MFVN, it can still be used.	**Many**
26.2.1.3	Signals received by the supervising station must be retransmitted to the communications center with the same level of specificity with which they were received.	**FR 4008**
26.2.4	Carbon monoxide detection is incorporated from NFPA 720.	**FR 4009** **SR 4005** **SR 4004**
A.26.3.4	Additional text better explains the requirements for listed central station service companies and code-compliant protected premises alarm systems.	**FR 4011**
A.26.3.4.1	The new annex material clarifies that 26.3.4 does not apply to Chapter 7 documentation.	**FR 4012**
26.3.5.2.2	Energy storage systems in a subsidiary station must be inspected in accordance with the manufacturer's instructions for physical condition of the equipment, as well as for operation.	**FR 4013**
26.3.8	Immediate communication of a trouble signal could result in unnecessary nuisance notifications that do not require intervention. This could encourage the owner to disregard notifications.	**FR 4020**
A.26.4.3.1	The revised text aligns the explanatory text for proprietary supervising stations with those of central stations and remote supervising stations.	**FR 4021**
26.4.3.5	The term *emergency staffing conditions* is removed, as it was undefined and ambiguous.	**FR 4026**
26.4.4.1.3	New annex material explains the purpose of identifying the location of the alarm signal and the reason that specific identification is not required in all cases.	**SR 4010**
A.26.5.3	The revised text aligns the explanatory text for remote supervising stations with those of central stations and proprietary supervising stations.	**FR 4023**
26.5.6	The revised text aligns the requirements for remote supervising stations with those of central stations and proprietary supervising stations.	**FR 4024**
26.6.3.13.1	Where single-path communication is permitted, it is not necessary to provide a 24-hour backup on a nonrequired secondary path.	**FR 4028** **SR 4022**
26.6.5.2.3	Mechanical protection for transmission circuits is not necessary since they are supervised.	**SR 4029**

Section Number	*Comments*	*FR/FCR/SR/SCR Reference*
26.6.5.2.6.2(A)	The requirement pertaining to two-way radio alarm transmitters (RATs) is deleted from the list because this section addresses one-way systems.	**FR 4025** **SR 4030**
26.6.5.2.8	Listing organizations have recognized that wireless mesh networks satisfy the requirements for a one-way private radio alarm system.	**FR 4029**
Chapter 27 Public Emergency Alarm Reporting Systems		
27.5.2.8.1	The requirement to install lead-acid batteries in approved transparent containers applies only to vented lead-acid batteries, and not to valve-regulated lead-acid batteries.	**FR 3509**
Chapter 28 Reserved		
Chapter 29 Single- and Multiple-Station Alarms and Household Signaling Systems		
Chapter title	Carbon monoxide detection is incorporated from NFPA 720.	**SR 1505**
29.1.1	Carbon monoxide detection is incorporated from NFPA 720.	**SR 1506**
29.1.2	Carbon monoxide detection is incorporated from NFPA 720.	**SR 1507**
29.2 Purpose.	Carbon monoxide detection is incorporated from NFPA 720.	**FR 1504**
29.3.2	Carbon monoxide detection is incorporated from NFPA 720.	**SR 1512**
29.3.3	Carbon monoxide detection is incorporated from NFPA 720.	**SR 1513**
29.4 Remote Annunciation.	Carbon monoxide detection is incorporated from NFPA 720. This requirement applies to all types of detection.	**SR 1516**
29.5 Notification.	Carbon monoxide detection is incorporated from NFPA 720.	**FR 1505** **SR 1521**
29.6.1	Carbon monoxide detection is incorporated from NFPA 720. This requirement applies to all types of detection.	**SR 1523**
29.6.2.2	Carbon monoxide detection is incorporated from NFPA 720.	**SR 1514**
29.6.3	Carbon monoxide detection is incorporated from NFPA 720.	**SR 1515**
29.7 Carbon Monoxide Detection.	Carbon monoxide detection is incorporated from NFPA 720.	**FR 1507** **SR 1511**
29.8.1	The requirements in this section apply only to smoke detection.	**FR 1506**
29.9.1	Carbon monoxide detection is incorporated from NFPA 720.	**FR 1514** **SR 1532**
29.9.2	The new text aligns the requirements for 10-year batteries with those of 1-year batteries.	**FR 1513** **SR 1533** **SR 1524**
29.9.3	Carbon monoxide detection is incorporated from NFPA 720.	**FR 1510** **SR 1534**
29.9.4	Carbon monoxide detection is incorporated from NFPA 720. In item (3), an audible alert for a dislodged power cord is an acceptable alternative to a restraining means.	**FR 1515**
29.9.5	Carbon monoxide detection is incorporated from NFPA 720.	**FR 1516** **SR 1509**
29.9.6	Carbon monoxide detection is incorporated from NFPA 720.	**FR 1511** **SR 1567**

Section Number	*Comments*	*FR/FCR/SR/SCR Reference*
29.9.7	Carbon monoxide detection is incorporated from NFPA 720.	**FR 1517**
29.9.8	Carbon monoxide detection is incorporated from NFPA 720. The occupant must be notified if the rechargeable battery is removed.	**FR 1518**
29.9.9	Carbon monoxide detection is incorporated from NFPA 720.	**FR 1512**
29.10.3	Carbon monoxide detection is incorporated from NFPA 720.	**FR 1521**
[deleted]	The requirement for resistance to nuisance sources of alarm was deleted. Cooking is the most common nuisance source and is addressed in 29.11.3.4(6).	**FR 1520**
29.10.6.6	Carbon monoxide detection is incorporated from NFPA 720.	**FR 1522**
29.10.6.11	Carbon monoxide detection is incorporated from NFPA 720.	**FR 1526**
29.10.7.3 & 29.10.7.4	Carbon monoxide detection is incorporated from NFPA 720.	**SR 1528**
29.10.7.6	Carbon monoxide detection is incorporated from NFPA 720.	**SR 1529**
29.10.7.7	Carbon monoxide detection is incorporated from NFPA 720. Text that was redundant to 29.10.7.2 and 29.10.7.3 is deleted.	**FR 1523**
29.10.9	Transmission of signals from single- and multiple-station fire alarms must be processed by a household alarm system.	**FR 1532** **SCR 20**
29.11.1.4	Carbon monoxide detection is incorporated from NFPA 720. Whether a smoke alarm is in a home, apartment, or hotel, it needs to be replaced within 10 years or when the device fails an operability test.	**FR 1525** **SR 1518**
29.11.3.4	In Item (6), the effective date for resistance to common nuisance sources from cooking is adjusted due to the availability of new test protocols and facilities. In item (9), the revised text and new annex material provides a means of being code compliant where it is physically impossible to locate smoke alarms or detectors 36 inches or more from the tip of a fan blade.	**FR 1519** **SR 1564**
29.11.6	The record of completion form has been moved from the Chapter 29 annex to Chapter 7.	**FR 1526** **SR 1510**
29.13 Inspection, Testing, and Maintenance.	Carbon monoxide detection is incorporated from NFPA 720.	**SR 1537**
29.14.2	Carbon monoxide detection is incorporated from NFPA 720.	**FR 1527** **SR 1535**
29.14.5	Carbon monoxide detection is incorporated from NFPA 720.	**FR 1527** **Detail FR 5055**
Annex A Explanatory Material - See above		
Annex B Engineering Guide for Automatic Fire Detector Spacing		
Annex C System Performance and Design Guide		
Annex D Speech Intelligibility		
Annex E Sample Ordinance Adopting *NFPA 72*		
Annex F Wiring Diagrams and Guide for Testing Fire Alarm Circuits		

Section Number	*Comments*	*FR/FCR/SR/SCR Reference*
F.1	Class N circuits are added, and Class R and Class S circuits are removed.	**FR 3071** **FR 4528** **SR 4523**
[deleted]	This section is deleted because the test methods do not align with IEEE standards.	**FR 4530**
Annex G Guidelines for Emergency Communication Strategies for Buildings and Campuses		
Annex H Carbon Monoxide	Carbon monoxide detection is incorporated from NFPA 720.	**FR 4515** **SR 1540**
Annex I Informational References		

Find

To find a word or term in the PDF:

1. Select Find under the Edit menu or use the keyboard shortcut: CTRL + F for PC; COMMAND + F for Mac.
2. Type a word or term in the Find box. To specify Whole words only or Case-sensitive, use the drop-down arrow to the right of the Find box and toggle these criteria on or off.

The found term will be highlighted in the text. To go to other occurrences of the term, use the previous and next buttons that appear beside the Find box.

Advanced Search

Use the drop-down arrow to the right of the Find box and select Open Full Search. Additional search options are available by selecting Show More Options at the bottom of the pane. Options in the advanced search window include matching the exact word or phrase, matching only some of the words, and stemming (see below).

> **Stemming** finds words that contain part (the stem) of a specified search word. For example, a search for the word *opening* would find instances of *open, opened, opens*, and *openly.* Wildcard characters (* or ?) are not permitted in stemming searches. Stemming isn't available if either Whole words only or Case-sensitive is selected.

Links

Links to other sections of the document are colored red. When you click on a link and are directed to another page, use the following keyboard shortcut to return to the original page: ALT + <left arrow> for PC; COMMAND + <left arrow> for Mac.

NFPA 72®, National Fire Alarm and Signaling Code®, 2019 edition, with Commentary

This handbook includes the complete text and illustrations of the 2019 edition of *NFPA 72®*, *National Fire Alarm and Signaling Code®*. The text and illustrations from the Code, which include the official requirements of *NFPA 72*, are printed in black. Line drawings from the Code are labeled "Figures."

Paragraphs that begin with the letter "A" are extracted from Annex A of the Code. Printed in black, this nonmandatory material is explanatory in nature. For ease of use, Annex A material in this handbook appears after the Code paragraph to which it refers.

In addition to Code text and annexes, the handbook includes commentary, which provides insight and background information for specific paragraphs in the Code. The commentary takes the reader behind the scenes into some of the thought processes underlying the requirements.

To identify commentary material, the commentary text is overprinted with a color tint panel. To help the reader distinguish between figures in the Code and exhibits in the commentary, the line drawings and photographs in the commentary are labeled "Exhibits."

In the frontmatter of the handbook a Summary of Technical Changes provides an overview of the major changes to key provisions of *NFPA 72* that have occurred in the 2019 edition of the Code in a multiple-column format. The first column provides the 2019 Code section reference, the second provides comments or the reason for the change or addition, and the third column provides the revision reference number. The inclusion of the revision reference number(s) provides the user of the handbook with the ability to research the actual submittal that resulted in the Code change (addition, deletion, or alteration). A description of the change is in that Code paragraph's accompanying commentary text.

Two additional major changes to Code text throughout the document were made to more closely follow the rules of NFPA's *Manual of Style for NFPA Technical Committee Documents* (MOS). First, frequent users of the Code may notice the lack of exceptions to many of the requirements that existed for many Code cycles. In accordance with the MOS, and where possible, technical committees have eliminated most of the exceptions. In most cases, exception text was rewritten as an additional Code section(s) below the section that had contained the exception. Users of the Code are cautioned to read all sections of a Code topic to make sure that all applicable requirements are understood.

The second major change, again to bring the document into compliance with the MOS, was a revision of many of the existing requirements so that no more than one requirement is in a single paragraph number. This change makes the document easier to understand, and as such, easier to apply.

Special Features in Handbook Commentary

Frequently Asked Questions (FAQs)
Identify specific code questions that are commonly received by NFPA staff and that are answered in the commentary.

Closer Look
Provides background information on a specific subject or issue from the commentary text.

System Design Tips
Point out sections of the commentary that are helpful or important, particularly to the architects and engineers who design the systems.

NFPA 720
Indicate requirements that were previously found in NFPA 720, *Standard for the Installation of Carbon Monoxide (CO) Detection and Warning Equipment*, which is now withdrawn.

FM
In Chapter 14, indicates material that is of particular interest to a facility manager.

REVISION SYMBOLS IDENTIFYING CHANGES FROM THE PREVIOUS EDITION

Text revisions are shaded. A Δ before a section number indicates that words within that section were deleted and a Δ to the left of a table or figure number indicates a revision to an existing table or figure. When a chapter was heavily revised, the entire chapter is marked throughout with the Δ symbol. Where one or more sections were deleted, a • is placed between the remaining sections. Chapters, annexes, sections, figures, and tables that are new are indicated with an ***N***.

Note that these indicators are a guide. Rearrangement of sections may not be captured in the markup, but users can view complete revision details in the First and Second Draft Reports located in the archived revision information section of each code at www.nfpa.org/docinfo. Any subsequent changes from the NFPA Technical Meeting, Tentative Interim Amendments, and Errata are also located there.

Shaded text = Revisions Δ = Text deletions and figure/table revisions • = Section deletions ***N*** = New material

Administration

CHAPTER 1

Chapter 1 contains the administrative requirements that apply to every chapter of *NFPA 72®*, *National Fire Alarm and Signaling Code®*. In addition, the first section of each chapter (except Chapters 2 and 3) contains an "Application" section that outlines the scope of the chapter and its relationship with other chapters.

1.1 Scope.

FAQ

How can users of NFPA codes and standards know if they are researching the right code when attempting to answer a code-related question?

Each NFPA code or standard begins with the "scope," a statement that clearly explains the extent of influence that the document has on its title's subject. In the case of *NFPA 72*, the scope clearly spells out the many items (application, installation, location, testing, and maintenance, among others) related to a fire alarm system, supervising station alarm system, public emergency alarm reporting system, fire and carbon monoxide detection and warning equipment, emergency communications system, and their components that are covered in the Code.

Δ **1.1.1** *NFPA 72* covers the application, installation, location, performance, inspection, testing, and maintenance of fire alarm systems, supervising station alarm systems, public emergency alarm reporting systems, fire and carbon monoxide detection and warning equipment, and emergency communications systems (ECS), and their components.

NFPA 720

NFPA 72 provides the minimum installation, inspection, testing, maintenance, and performance requirements for fire alarm systems used in any application. Requirements address the application, location, and limitations of fire alarm system components, such as manual fire alarm boxes, automatic fire detectors, and notification appliances. The Code also provides the minimum requirements for fire warning equipment, which includes single- and multiple-station alarms and household signaling systems addressed in Chapter 29. New for the 2019 edition of the Code is the inclusion of carbon monoxide detection and warning equipment requirements throughout the Code. This inclusion is reflected in the scope of the document. Carbon monoxide requirements previously found in NFPA 720, *Standard for the Installation of Carbon Monoxide (CO) Detection and Warning Equipment*, have now been incorporated in the chapters of *NFPA 72*, where appropriate.

The organization of the Code facilitates the application of requirements common to both fire systems and emergency signaling systems. There is a need to present requirements for fire alarm systems clearly while addressing many other emergency signaling conditions. These occur often in conjunction with a fire alarm system, but at other times, they do not.

The organization of the Code places its content into four common groupings: administrative chapters, support chapters, system chapters, and usability annexes. Commentary Table 1.1 outlines the chapters that belong with each grouping.

COMMENTARY TABLE 1.1 *Organization of Code Chapters*

Administrative chapters	Chapter 1, Administration
	Chapter 2, Referenced Publications
	Chapter 3, Definitions
	Chapter 7, Documentation
Support chapters	Chapter 10, Fundamentals
	Chapter 12, Circuits and Pathways
	Chapter 14, Inspection, Testing, and Maintenance
	Chapter 17, Initiating Devices
	Chapter 18, Notification Appliances
System chapters	Chapter 21, Emergency Control Function Interfaces
	Chapter 23, Protected Premises Alarm and Signaling Systems
	Chapter 24, Emergency Communications Systems (ECS)
	Chapter 26, Supervising Station Alarm Systems
	Chapter 27, Public Emergency Alarm Reporting Systems
	Chapter 29, Single- and Multiple-Station Alarms and Household Signaling Systems
Usability annexes	Annex A, Explanatory Material
	Annex B, Engineering Guide for Automatic Fire Detector Spacing
	Annex C, System Performance and Design Guide
	Annex D, Speech Intelligibility
	Annex E, Sample Ordinance Adopting *NFPA 72*
	Annex F, Wiring Diagrams and Guide for Testing Fire Alarm Circuits
	Annex G, Guidelines for Emergency Communication Strategies for Buildings and Campuses
	Annex H, Carbon Monoxide
	Annex I, Informational References

The 2019 edition contains a number of "reserved" chapters. The reserved chapters improve usability by avoiding renumbering the existing chapters when a new topic is assigned.

FAQ

Does *NFPA 72* require the installation of a fire alarm system or other emergency system?

NFPA 72 does not mandate the installation of a fire alarm system, fire or carbon monoxide detection or warning equipment, or emergency communications systems. The need for the installation of these systems or equipment is established through a framework of higher level mandates established through the requirements of NFPA 1, *Fire Code;* NFPA *101*®, *Life Safety Code*®; *NFPA 5000*®, *Building Construction and Safety Code*® (see Exhibit 1.1); other building codes; federal, state, or local ordinances; insurance company requirements; military design criteria; corporate policies; other organizational policies (both private and public); and the individual needs of the property owner or occupant. *NFPA 72* provides the requirements for how to install this equipment regardless of the reason it is installed. See 1.2.4 and related annex material in A.1.2.4.

1.1.2 The provisions of this chapter apply throughout the Code unless otherwise noted.

Chapter 1 provides a foundation from which to apply the requirements of the Code. These administrative requirements apply throughout the Code but can be modified by the special requirements set forth in the subsequent chapters. As an example, Section 1.4 indicates that the requirements are not intended to be retroactively applied.

EXHIBIT 1.1

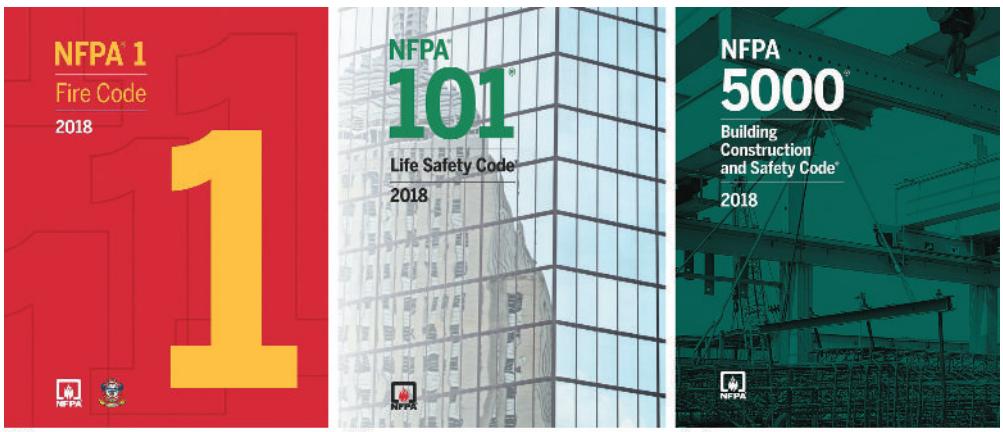

(a) (b) (c)

Codes Referenced by NFPA 72.

The commentary following 1.4.1 elaborates on provisions of the Code as they specifically apply to new and existing systems. References are made in 7.1.2 for documentation and to the requirements of inspection, testing, and maintenance of systems as noted in 14.1.4.

To provide a consistent framework for users, all NFPA documents follow a standard format, which is specified in the *Manual of Style for NFPA Technical Committee Documents*. This format is particularly specific for the administrative requirements in Chapter 1.

N **1.1.3** For the purposes of carbon monoxide detection, this standard is primarily concerned with life safety, not property protection. **NFPA 720**

This subsection makes clear that the installation of carbon monoxide detection, which is a part of this Code, is intended to provide life safety protection for the occupants of the building and not for the protection of the actual building such as fire sprinklers could provide.

1.2* Purpose.

A.1.2 Fire alarm systems intended for life safety should be designed, installed, and maintained to provide indication and warning of abnormal fire conditions. The system should alert building occupants and summon appropriate aid in adequate time to allow for occupants to travel to a safe place and for rescue operations to occur. The fire alarm system should be part of a life safety plan that also includes a combination of prevention, protection, egress, and other features particular to that occupancy.

1.2.1 The purpose of this Code shall be to define the means of signal initiation, transmission, notification, and annunciation; the levels of performance; and the reliability of the various types of fire alarm systems, supervising station alarm systems, public emergency alarm reporting systems, fire and carbon monoxide detection and warning equipment, emergency communications systems, and their components. **NFPA 720**

The Code describes the various types of alarm and supervisory initiating devices as well as alarm, supervisory, and trouble audible and visual notification appliances for fire alarm and other emergency

systems. Requirements for how these devices and appliances must be installed and used and how they must perform are provided. The types of systems, the methods of signal transmission, and the features that determine system reliability and performance are also described. However, the Code is not an installation specification, an approval guide, or a training manual.

1.2.2 This Code defines the features associated with these systems and also provides information necessary to modify or upgrade an existing system to meet the requirements of a particular system classification.

System Design Tip

Whenever a system is modified or updated, it is vital that the system designer have a thorough understanding of the existing equipment, including its capabilities and the system's wiring (i.e., circuit class, type, and configuration). Where applicable, the software and firmware of existing systems need to be examined to verify compatibility with the new equipment. Often, the existing equipment is too old to interface easily with the newer technology used in the planned additional equipment. The existing equipment may or may not be able to be modified to conform to current Code requirements. In some cases, the most prudent choice may be to install a new fire alarm system or other emergency signaling system where used.

1.2.3 This Code establishes minimum required levels of performance, extent of redundancy, and quality of installation but does not establish the only methods by which these requirements are to be achieved.

System Design Tip

NFPA 72 provides a minimum set of requirements. A designer may choose to exceed the requirements based on a risk assessment of the premises in which the system is to be installed. The requirements apply to voluntary installations as well as mandated installations. Subsection 7.2.1(1) requires a written narrative providing the intent and system description. The narrative should state clearly if the proposed system has been designed to meet the minimum requirements of a model building, fire, or life safety code and the Code; or if the plan submittal is attempting to meet some other basis of design such as the voluntary installation of a system at the request of the building owner. By providing this narrative, all stakeholders will understand whether the system design is intended to meet or exceed the established minimum required levels of performance.

1.2.4* This Code shall not be interpreted to require a level of protection that is greater than that which would otherwise be required by the applicable building or fire code.

A.1.2.4 The intent of this paragraph is to make it clear that the protection requirements are derived from the applicable building or fire code, not from *NFPA 72*.

As noted in the FAQ following 1.1.1, the need for a fire alarm system, fire and carbon monoxide detection and warning equipment, or an emergency communications system is established outside the requirements of *NFPA 72*. The level of protection required is also established outside of *NFPA 72* and depends on factors such as the type of occupancy (Use Group), building height, and its occupancy load. Variations can include the following:

- The type of detection (manual, automatic, or both)
- The extent of detection coverage [total (complete), partial, or selective]
- The need for occupant notification (audible, visual, or both)
- The need to monitor manual and automatic fire suppression systems and features
- The need for a particular type of emergency communications system
- The need for emergency forces notification (including automatic transmission of alarm signals to an off-site location)

Normally, *NFPA 72* will be the referenced alarm system document included in the specified requirements, and the need for compliance with the Code is often clearly stated.

Once the need for a fire alarm system, other fire and carbon monoxide detection or warning equipment, or an emergency communications system has been established, the protection features have been specified, and *NFPA 72* has been referenced, the system and equipment must conform to all the applicable requirements of the Code. For instance, *NFPA 72* includes numerous minimum requirements common to all systems to ensure the reliability and performance of the system, such as requirements for monitoring the integrity of circuits and power supplies. In other cases, minimum requirements are included for specific features such as survivability of audible and visual notification appliance circuits when systems are used for partial evacuation or relocation of occupants or other emergency communications purposes. Although these items may not be discussed within the framework of other codes, standards, and jurisdictional documents, once *NFPA 72* is referenced, the minimum installation requirements of *NFPA 72* must be followed for a Code-compliant installation.

When conflicts exist among the various codes, standards, and other jurisdictional documents, it is important to understand the order in which codes are enforced. Typically, when *NFPA 72* is referenced by another document and that document provides a requirement that conflicts (is either more or less stringent) with *NFPA 72*, the user must first follow the requirements in the document referencing *NFPA 72*. Fortunately, many of the building and fire code alarm system equipment requirements, and those in *NFPA 72*, are identical, but instances may occur where this is not the case.

FAQ

Where the required system features are not specified through a framework of higher-level mandates, who must determine the needs and features?

System Design Tip

Many of the requirements of *NFPA 72* are stated in conditional terms such as "Where required . . ." Where the needs and features of the system are not specified by other codes, standards, or jurisdictional documents, they still need to be determined. The system designer, in conjunction with the authority having jurisdiction and the system owner, must establish these needs and features as a part of the basis of the system design. This collaboration is especially necessary for systems that are installed voluntarily (nonrequired systems). The requirements of *NFPA 72* also apply to the installation of nonrequired systems. See 1.1.1.

1.3 Application.

1.3.1 Alarm systems shall be classified as follows:

Some systems formerly identified as "fire alarm" systems are now identified as "alarm" systems because they can also serve other purposes.

(1) Fire alarm systems
  (a) Household fire alarm systems

Fire warning equipment in residential occupancies is installed to warn the occupants of a fire emergency so they can evacuate the building immediately. The term *fire warning equipment*, defined in 3.3.115, can comprise a *household fire alarm system*, defined in 3.3.111.2, or *single-station* or *multiple-station alarms*, defined in 3.3.269 and 3.3.170, respectively. The requirements for fire warning equipment are detailed in Chapter 29. These requirements typically apply to certain occupancies such as one- and two-family dwellings, or portions of certain occupancies such as sleeping rooms or guest suites in hotels, and the dwelling units of apartment and condominium buildings.

(b) Protected premises (local) fire alarm systems

The primary purpose of most fire alarm systems in a protected premises is to warn building occupants to evacuate the premises. Other purposes of these fire alarm systems include actuating or monitoring the building fire protection features, providing property protection, ensuring mission continuity, providing heritage preservation, and providing environmental protection. The term *protected premises (local) fire alarm system* applies to any fire alarm system located at the protected premises, including *building fire alarm systems, dedicated function fire alarm systems*, and *releasing fire alarm systems*. See 3.3.111.4 for definitions of these systems. Chapter 23 describes the requirements for fire alarm systems in protected premises.

(2) Carbon monoxide detection equipment and systems
(a) Single and multiple station carbon monoxide alarms
(b) Carbon monoxide detectors and their related systems and components

According to the Centers for Disease Control and Prevention, between 2010 and 2015 a total of 2,244 deaths occurred due to unintentional carbon monoxide poisoning. Carbon monoxide (CO) is a colorless and odorless gas produced on a daily basis as the by-product of the burning of fuels that contain carbon molecules. Sources in a building can include furnaces and water heater equipment that use oil, natural or LP-Gas, vehicles operated in an attached garage, and wood-burning stoves and fireplaces. Normally, well-vented equipment and cars operated outside of an attached garage expel deadly carbon monoxide gases to the outside air and pose little, if any, danger to building occupants.

Since conditions can sometimes occur in a building, such as where a gas-fired piece of equipment experiences venting problems due to a blocked or closed flue vent, the risk of a buildup of deadly CO gas in a building is always a possibility. Carbon monoxide detection equipment has been developed to detect the harmful levels of CO that can rapidly develop when CO is not expelled to the outside of a building. States (more than one-half) and model building codes now recognize this risk and require the installation of carbon monoxide detection in occupancy classifications such as single- and multi-family dwelling units. Additionally, schools, and hotels and motels, often are required to install CO detection equipment.

CO detection can be found as a stand-alone *carbon monoxide system* (see 3.3.35), a *combination carbon monoxide system* (see 3.3.35.1), or a *household carbon monoxide system* (see 3.3.35.2). Single-station CO alarms are also widely available (see Exhibit 1.2).

EXHIBIT 1.2

Single-Station CO Alarm. (Courtesy of System Sensor Corp., St. Charles, IL)

(3) Supervising station alarm systems

System Design Tip

Supervising station alarm systems, described in Chapter 26, provide the means of communication between the protected premises and a particular supervising station location. Alarm systems that transmit their signals to a particular supervising station location are categorized into one of the types of supervising station alarm systems that are addressed in 1.3.1(3)(a) through 1.3.1(3)(c). While *NFPA 72* does not specify which type of supervising station system must be used, and most other model building and fire codes permit the flexibility to use any of these types, some jurisdictions include in their regulations a specific type of supervising station alarm system. System designers should verify local requirements during project planning.

(a) Central station (service) alarm systems

Central station service alarm systems typically involve fire alarm systems of those protected premises where signals are supervised by a listed central station providing central station service. [As noted in the commentary following 1.3.1(3)(b), a listed central station can also provide remote supervising station service.] The term *central station service alarm system,* defined in 3.3.291.1, includes installation, testing, and maintenance of the supervised system as well as monitoring, alarm retransmission to the

fire department, runner service, and record keeping. As the possible *prime contractor,* defined in 3.3.209, such companies will have obtained specific listing from a third-party listing agency acceptable to the authority having jurisdiction as a provider of central station service.

Central station service may be used where a facility has either a high risk of loss or a high value. For example, a facility that has a large number of nonambulatory people may benefit from central station service. Similarly, a high-hazard or high-value manufacturing facility may benefit from central station service. Central station service may also be used for the supervision of sprinkler systems in which monitoring at a constantly attended location is required. See Section 26.3 for requirements pertaining to alarm systems for central station service.

(b) Remote supervising station alarm systems

Where permitted, if a building owner does not want to use a central station service alarm system, if a proprietary supervising station alarm system is not appropriate, or if a public emergency alarm reporting system is not available, then the owner can choose to use a remote supervising station alarm system. These systems provide a means for transmitting alarm, supervisory, and trouble signals from the protected premises to a remote location. The remote location will be permitted at a *communications center* defined in 3.3.57), a fire station, or responsible government agency. Where permitted by the authority having jurisdiction, an alternate location, such as a listed central station, will be permitted. Because the communications center does not always respond to supervisory and trouble signals, the use of a privately operated remote supervising station may be needed. It should be noted that a listed central supervising station can also be used to provide remote supervising station service and in doing so needs to comply only with the requirements for remote supervising station alarm systems. See Section 26.5 for requirements pertaining to remote supervising station alarm systems.

(c) Proprietary supervising station alarm systems

Proprietary supervising station alarm systems typically involve the fire alarm systems of those protected premises where the signals are monitored by a supervising station under the same ownership as the protected premises. The supervising station can be located at the protected property or at one of multiple protected properties. The property may consist of a single building, such as a high-rise building, or several buildings, such as at a college campus. The property may be contiguous or noncontiguous. An example of a proprietary supervising station with contiguous property is a single college campus location where the buildings report to a single proprietary supervising station at the campus police or fire department also at that location. If the property is noncontiguous, it may consist of protected properties at remote locations, such as a retail store chain with properties across the country or the world, that are monitored from a single location owned by the retail store chain. See Section 26.4 for requirements pertaining to proprietary supervising station alarm systems.

(4) Public emergency alarm reporting systems

FAQ

What is a public emergency alarm reporting system?

Public emergency alarm reporting systems, formerly called public fire alarm reporting systems or municipal fire alarm systems, involve systems of alarm initiating devices, receiving equipment, and connecting circuits used to transmit alarms from street locations to the communications center. Public emergency alarm reporting systems provide publicly accessible alarm boxes at strategic locations throughout a municipality. A *publicly accessible alarm box*, defined in 3.3.12.5, is an enclosure accessible to the public that houses a manually operated transmitter. Citizens initiate an emergency alarm signal by actuating one of these alarm boxes.

Auxiliary systems provide a direct means of communication between the protected premises system and the communications center, using a public emergency alarm reporting system auxiliary box or master box. An *auxiliary alarm box,* defined in 3.3.12.1, is an alarm box that can only be operated remotely. A *master alarm box*, defined in 3.3.12.4, is a publicly accessible alarm box that is also equipped for remote actuation. If a municipality does not have a public emergency alarm reporting system, then an auxiliary alarm system cannot be provided. See Chapter 27 for requirements pertaining to public emergency alarm reporting systems and auxiliary alarm systems.

(a) Auxiliary alarm systems — local energy-type

Typically, when a fire alarm signal at the protected premises is actuated, contacts in the fire alarm system control unit at the protected premises actuate a circuit that, in turn, causes a public emergency alarm reporting system auxiliary or master box to transmit a fire alarm signal to the communications center.

Power to operate the local energy interface circuit comes from the fire alarm system control unit at the protected premises. In addition, the fire alarm system control unit at the protected premises monitors the interface circuit for integrity and monitors the set or unset condition of the public emergency alarm reporting system auxiliary or master box. A wired public emergency alarm reporting system, a series telephone public emergency alarm reporting system, and a wireless public emergency alarm reporting system all use a local energy interface circuit (provided in the fire alarm control unit at the protected premises) to allow a fire alarm system control unit at the protected premises to actuate the auxiliary or master box. See 27.6.3.2.2.1(1) for requirements pertaining to local energy–type auxiliary systems.

(b) Auxiliary alarm systems — shunt-type

As an alternative to a local energy interface, some wired public emergency alarm reporting system boxes offer a shunt connection. A closed contact at the protected premises is electrically connected to a circuit that is derived from the public emergency alarm reporting telegraph circuit. When the closed contact opens the circuit and removes the shunt, the box trips and initiates a signal to the communications center.

The Code limits the devices connected to a shunt circuit to manual fire alarm boxes and automatic sprinkler waterflow switches. Automatic fire detectors are not permitted to be connected to a shunt circuit. Because the wiring necessary to actuate shunt-type master boxes must enter the protected premises, and damage to or tampering with these circuits is out of the control of the fire department, many jurisdictions do not permit shunt-type master boxes to be installed on their municipal loop. See 27.6.3.2.2.1(2) for requirements pertaining to shunt-type auxiliary systems.

1.3.2 Emergency communications systems shall be classified as follows:

An *emergency communications system*, in accordance with 3.3.90, is "a system for the protection of life by indicating the existence of an emergency situation and communicating information necessary to facilitate an appropriate response and action." As stated in 24.2.3, "An emergency communications system is intended to communicate information about emergencies including, but not limited to, fire, human-caused events (accidental and intentional), other dangerous situations, accidents, and natural disasters." Some of these systems may be used as part of a stand-alone fire alarm system, while others may be used as part of a combination (fire alarm) system or as part of another emergency system.

(1) One-way emergency communications systems

One-way emergency communications systems, defined in 3.3.90.1, are intended to broadcast emergency messages using audible, visual, or textual means.

(a) Distributed recipient mass notification systems

Distributed recipient mass notification systems (DRMNS) are intended to communicate directly with targeted individuals and groups that may or may not be in a contiguous area (see 3.3.90.1.1 and Section 24.7). DRMNS include net-centric alerting systems (NCASs) that are based on Internet protocol (IP) technologies. An NCAS leverages the IP network infrastructure to reach instantly those personnel who have access to nearly any IPconnected devices, by way of pop-up alerts on PCs and tablets, text messages to cell phones, email to IP-capable cell phones, and recorded voice messages to voice over IP (VoIP) telephones and PCs. Additionally, NCASs can be used to actuate through a single interface non-IP alerting systems, such as in-building mass notification systems, wide-area mass notification systems, and traditional dial-up telephone alerting systems.

(b) In-building fire emergency voice/alarm communications systems

In-building fire emergency voice/alarm communications systems (EVACS) are the traditional emergency voice/alarm communications systems used for fire alarm systems. As the name implies, these systems are intended for fire alarm system applications in buildings and have traditionally been used by emergency forces on their arrival to a building to update occupants on the need to evacuate, relocate, or stay in place, and to provide other specific information. The requirements for these systems are in Chapter 24, Emergency Communications Systems (ECS). See 3.3.90.1.2 and Section 24.4.

(c) In-building mass notification systems

In-building mass notification systems, defined in 3.3.90.1.3, are somewhat similar in concept to an in-building fire emergency voice/alarm communications system, but their potential application is much broader. The requirements for these systems are more extensive and reflect the level of sophistication needed for systems that may involve a variety of complex scenarios, including fire scenarios (see Section 24.5). While the operation of an in-building fire emergency voice/alarm communications system typically activates automatically on receipt of a signal received by the fire alarm control unit, in-building mass notification systems are typically placed into operation based on an emergency plan developed for the occupancy for a specific given condition.

The possible uses for in-building mass notification systems could include making announcements warning occupants of conditions that are not fire related but might be life threatening. Such a condition could include hostile events in a building that might require building occupants to initiate lockdown mode. Another example could be to make an in-building announcement about a pending weather emergency, such as a tornado warning, which might necessitate the need to move to a storm shelter.

(d) Wide-area mass notification systems

Wide-area mass notification systems are intended to serve outdoor areas, such as a campus or an entire community. These systems may also communicate with other notification systems provided for other campus areas, military bases, municipalities, or other similar areas (see 3.3.90.1.4 and Section 24.6). Wide-area mass notification systems can also be integrated with in-building mass notification systems.

(2) Two-way emergency communications systems

Two-way emergency communications systems, defined in 3.3.90.2, are used to facilitate the exchange of information and the communication of instructions in buildings. Some of these systems are intended primarily for emergency services personnel or building fire wardens, while others are intended for occupants such as those in an area of refuge.

(a) In-building emergency communications systems

In-building emergency communications systems include two-way, in-building wired emergency services communications systems (two-way telephone communications systems) often used by emergency forces (see Section 24.8); two-way radio communications enhancement systems (bidirectional antenna and signal booster systems) also often used by emergency forces (see Section 24.9); area of refuge (area of rescue assistance) emergency communications systems typically used by individuals needing assistance from a protected area during an emergency (see Section 24.10). A realignment in the 2019 Code has moved the requirements for stairway communications systems, elevator landing communications systems, and occupant evacuation elevator lobby communications systems under Section 24.10, as they are all similar. The requirements for elevator emergency communications systems have been removed from the 2019 Code as ANSI/ASME A17.1/CSA B44–16, *Safety Code for Elevators and Escalators*, already addresses this material.

The basic requirements for two-way radio communications enhancement systems are provided in Section 24.9. The detailed requirements had been relocated to NFPA 1221, *Standard for the Installation, Maintenance, and Use of Emergency Services Communications Systems*.

1.3.3 Any reference or implied reference to a particular type of hardware shall be for the purpose of clarity and shall not be interpreted as an endorsement.

NFPA does not manufacture, test, distribute, endorse, approve, certify, or list services, products, or components. See Section 3.2 and the associated Annex A material for definitions of the terms *approved* and *listed.*

1.3.4 The intent and meaning of the terms used in this Code shall be, unless otherwise defined herein, the same as those of *NFPA 70*.

For the installation of the systems addressed by *NFPA 72*, *NFPA 70®*, *National Electrical Code®* (*NEC®*), must also be used. To avoid confusion, the definitions and use of terms that are in *NFPA 72* are the same as those in the *NEC*, unless a separate definition is provided in this Code.

N **1.3.5** The requirements of Chapters 7, 10, 12, 14, 17, 18, 21, 23, 24, 26, and 27 shall apply unless otherwise noted in the specific chapter. Chapter 29 is designed to stand alone unless it specifically references an earlier chapter.

The requirement of 1.3.5 has been added in the 2019 edition to clarify that many chapters in the Code apply to all equipment or systems installed either by mandate or voluntarily. There are instances in the Code where certain provisions do not apply to certain situations. An example of this is in 10.4.5, which requires the protection of control units with early fire warning detection. The same early fire warning is not required in 10.4.6 for control units classified as designated function fire alarm control units that are not required to provide local or supervising station notification signals. The requirements of Chapter 29 primarily stand on their own, unless a reference to another chapter is identified [see 29.9.3(5) as an example].

1.4 Retroactivity.

1.4.1 Unless otherwise noted, it is not intended that the provisions of this document be applied to facilities, equipment, structures, or installations that were existing or approved for construction or installation prior to the effective date of the document.

FAQ

Are the requirements of *NFPA 72* retroactive?

With the exception of Chapters 7 and 14, the Code does not apply retroactively to existing installations. See 7.1.2 and 14.1.4, and the associated commentary, which clearly indicate the retroactive application of Chapter 7 and 14 requirements.

It is not intended that the requirements of Chapter 29 be applied retroactively. However, as changes are made to existing installations of fire warning equipment, it is expected that the full requirements of Chapter 29 would apply, unless exempted by governing codes or statutes or by a future effective date in Chapter 29.

1.4.2 In those cases where it is determined by the authority having jurisdiction that the existing situation involves a distinct hazard to life or property, retroactive application of the provisions of this document shall be permitted.

The authority having jurisdiction may determine that while the system still meets the minimum requirements of the version of the Code that was in effect at the time of installation, the system may no longer meet the minimum requirements for the premises' current use. A change of occupancy, tenant improvements to the building, or system upgrades may have occurred since the fire alarm system was installed and approved. Another reason that a system would be determined to no longer meet the minimum requirements may be that the system is not operating reliably, resulting in constant repairs that jeopardize the effectiveness of the system. Also see the commentary following 1.2.2. However, it is important not to interpret 1.4.2 as requiring, for example, the replacement of an entire notification appliance system because a single component, such as a nontemporal notification appliance, is inoperative and needs replacing. It also is not intended to require the update of fully functioning existing equipment to the most recent technology.

1.5 Equivalency.

1.5.1 Nothing in this Code shall prevent the use of systems, methods, devices, or appliances of equivalent or superior quality, strength, fire resistance, effectiveness, durability, and safety over those prescribed by this Code.

1.5.2 Technical documentation shall be submitted to the authority having jurisdiction to demonstrate equivalency.

1.5.3 The systems, methods, devices, or appliances that are found equivalent shall be approved.

Devices or systems that do not meet the specific requirements of the Code can be presented to the authority having jurisdiction as equivalent to the Code. Technical documentation to substantiate the request for equivalency must be submitted with the request. Examples of technical documentation include testing laboratory reports, engineering calculations, experiential data, and documented engineering judgments. The authority having jurisdiction determines whether a product, method, or device is suitable. Also refer to the definition of the term *approved* in 3.2.1, the related Annex A material, and as noted in the FAQ following A.3.2.1.

For various reasons, authorities having jurisdiction often must use earlier referenced editions of the Code and, therefore, may be provided with little guidance when presented with new types of systems or technology for design or permit review and approval. This should not result in the avoidance of new technology by a designer or a rejection of a submittal by a plan reviewer. The use of specific portions of the more current editions of the Code is permitted and may be necessary when an earlier edition does

System Design Tip

not provide specific prescriptive- or performance-based design options or alternatives to guide in the design or review of a system or systems.

1.6 Units and Formulas.

System Design Tip

Dimensions and other numerical values express the intended level of precision for design, installation, and enforcement. (See 1.6.5 and 1.6.6 for more discussion on the subject of precision.) Values converted to metric units are rounded to convey the same approximate level of precision as the original U.S. units. Due to rounding, the two values might not convert exactly because of the intended precision of the measurement. For example, 90 in. is converted and rounded to 2.29 m. By expressing the value in meters as 2.29, there is no confusion — the 9 is the least significant digit, and the number has a precision of 0.01 m.

1.6.1 The units of measure in this Code are presented in U.S. Customary Units (inch-pound units).

1.6.2 Where presented, the International System (SI) of Units follow the inch-pound units in parentheses.

1.6.3 Where both systems of units are presented, either system shall be acceptable for satisfying the requirements in this Code.

1.6.4 Where both systems of units are presented, users of this Code shall apply one set of units consistently and shall not alternate between units.

1.6.5* The values presented for measurements in this Code are expressed with a degree of precision appropriate for practical application and enforcement. It is not intended that the application or enforcement of these values be more precise than the precision expressed.

A.1.6.5 Where dimensions are expressed in inches, it is intended that the precision of the measurement be 1 in., thus plus or minus 1⁄2 in. The conversion and presentation of dimensions in millimeters would then have a precision of 25 mm, thus plus or minus 13 mm.

Where measurements are presented in inches (and millimeters), the precision assumed for enforcement is 1 in. (25 mm). Values presented are not intended to be enforced to a higher level of precision. An exception to this rule is in the discussion on spot-type smoke detector spacing in A.17.7.3.2.3.1 and the accompanying commentary material. A +/–5 percent factor is permitted to be used for spot-type smoke detector spacing, which would permit an additional 18 in. (or 31.5 ft) of detector coverage.

1.6.6 Where extracted text contains values expressed in only one system of units, the values in the extracted text have been retained without conversion to preserve the values established by the responsible technical committee in the source document.

1.7 Code Adoption Requirements.

This Code shall be administered and enforced by the authority having jurisdiction designated by the governing authority. *(See Annex E for sample wording for enabling legislation.)*

References Cited in Commentary

ANSI/ASME A17.1/CSA B44, *Safety Code for Elevators and Escalators*, 2016 edition, American Society of Mechanical Engineers, New York, NY.

Manual of Style for NFPA Technical Committee Documents, 2004 edition, National Fire Protection Association, Quincy, MA.

NFPA 1, *Fire Code,* 2018 edition, National Fire Protection Association, Quincy, MA.

NFPA 70®, *National Electrical Code®*, 2017 edition, National Fire Protection Association, Quincy, MA.

NFPA *101®*, *Life Safety Code®*, 2018 edition, National Fire Protection Association, Quincy, MA.

NFPA 720, *Standard for the Installation of Carbon Monoxide (CO) Detection and Warning Equipment* (withdrawn), National Fire Protection Association, Quincy, MA.

NFPA 1221, *Standard for the Installation, Maintenance, and Use of Emergency Services Communications Systems*, 2019 edition, National Fire Protection Association, Quincy, MA.

NFPA 5000®, *Building Construction and Safety Code®*, 2018 edition, National Fire Protection Association, Quincy, MA.

Referenced Publications

CHAPTER

2

This chapter lists the publications that are referenced in the mandatory chapters (Chapter 3 through Chapter 29) of *NFPA 72®*, *National Fire Alarm and Signaling Code®*. These mandatory referenced publications are needed for the effective use of and compliance with *NFPA 72* and constitute part of *NFPA 72*'s requirements. By locating the information immediately after Chapter 1, Administration, the user is presented with the complete list of publications needed for effective use of the Code before reading the specific requirements.

All reference listings in Chapter 2 contain complete reference information (for example, document number, document title, publisher, and date of publication).

Annex I lists nonmandatory publications and informational references that are cited in the annexes of *NFPA 72*.

2.1 General.

The documents or portions thereof listed in this chapter are referenced within this Code and shall be considered part of the requirements of this document.

2.2 NFPA Publications.

National Fire Protection Association, 1 Batterymarch Park, Quincy, MA 02169-7471.

NFPA 10, *Standard for Portable Fire Extinguishers,* 2018 edition.

NFPA 13, *Standard for the Installation of Sprinkler Systems,* 2019 edition.

NFPA 25, *Standard for the Inspection, Testing, and Maintenance of Water-Based Fire Protection Systems,* 2017 edition.

NFPA 37, *Standard for the Installation and Use of Stationary Combustion Engines and Gas Turbines,* 2018 edition.

NFPA 70®, *National Electrical Code®,* 2017 edition.

NFPA 75, *Standard for the Fire Protection of Information Technology Equipment,* 2017 edition.

NFPA 90A, *Standard for the Installation of Air-Conditioning and Ventilating Systems,* 2018 edition.

NFPA *101®*, *Life Safety Code®,* 2018 edition.

NFPA 110, *Standard for Emergency and Standby Power Systems,* 2019 edition.

NFPA 111, *Standard on Stored Electrical Energy Emergency and Standby Power Systems,* 2019 edition.

NFPA 170, *Standard for Fire Safety and Emergency Symbols,* 2018 edition.

NFPA 601, *Standard for Security Services in Fire Loss Prevention,* 2015 edition.

NFPA 1031, *Standard for Professional Qualifications for Fire Inspector and Plan Examiner,* 2014 edition.

NFPA 1221, *Standard for the Installation, Maintenance, and Use of Emergency Services Communications Systems,* 2019 edition.

NFPA 1600®, Standard on Disaster/Emergency Management and Business Continuity Programs, 2019 edition.

NFPA 1620, *Standard for Pre-Incident Planning,* 2015 edition.

2.3 Other Publications.

2.3.1 ANSI Publications.

American National Standards Institute, Inc., 25 West 43rd Street, 4th Floor, New York, NY 10036.

ANSI A-58.1, *Building Code Requirements for Minimum Design Loads in Buildings and Other Structures*.

ANSI S1.4a, *Specifications for Sound Level Meters*, 2014.

ANSI/ASA S3.41, *American National Standard Audible Emergency Evacuation (E2) and Evacuation Signals with Relocation Instructions (ESRI)*, 1990, reaffirmed 2015.

N **2.3.2 ASME Publications.**

American Society of Mechanical Engineers, Two Park Avenue, New York, NY 10016-5990.

ASME A17.1/CSA B44–13, *Safety Code for Elevators and Escalators*, 2016.

N **2.3.3 IEEE Publications.**

Institute of Electrical and Electronics Engineers, 3 Park Avenue, 17th Floor, New York, NY 10016-5997.

IEEE 450, *Recommended Practice for Maintenance, Testing, and Replacement of Vented Lead-Acid Batteries for Stationary Applications*, 2010.

IEEE 1106, *Recommended Practice for Installation, Maintenance, Testing, and Replacement of Vented Nickel-Cadmium Batteries for Stationary Applications*, 2005.

ANSI/IEEE C2, *National Electrical Safety Code*, 2017.

2.3.4 IMSA Publications.

International Municipal Signal Association, 165 East Union Street, Newark, NY 14513-0539.

"IMSA Official Wire and Cable Specifications," 2012.

2.3.5 ISO Publications.

International Organization for Standardization, ISO Central Secretariat, BIBC II, Chemin de Blandonnet 8, CP 401, 1214 Vernier, Geneva, Switzerland.

ISO 7731, *Danger signals for public and work places — Auditory danger signals*, 2003 (reconfirmed 2015).

2.3.6 Telcordia Publications.

Telcordia Technologies, One Telcordia Drive, Piscataway, NJ 08854.

GR-506-CORE, LATA Switching Systems Generic Requirements: Signaling for Analog Interface, 2011.

GR-909-CORE, Fiber in the Loop Systems Generic Requirements, 2004.

N 2.3.7 TIA Publications.

TIA-526, *Standard Test Procedures for Fiber Optic Systems*.

Telecommunications Industry Association, 1320 North Courthouse Road, Suite 200, Arlington, VA 22201.

ANSI/TIA-568-C.3, *Optical Fiber Cabling Components Standard*, 2015.

ANSI/TIA-569-D, *Telecommunications Pathways and Spaces*.

N 2.3.8 UL Publications.

Underwriters Laboratories, 333 Pfingsten Road, Northbrook, IL 60062-2096.

ANSI/UL 38, *Standard for Manual Signaling Boxes for Fire Alarm Systems,* 2008.

ANSI/UL 217, *Standard for Single and Multiple Station Smoke Alarms*, 8th edition, revised 2016.

ANSI/UL 268, *Standard for Smoke Detectors for Fire Alarm Systems*, 7th edition, 2016.

ANSI/UL 521, *Standard for Heat Detectors for Fire Protective Signaling Systems*, 7th edition, 1999, revised 2016.

ANSI/UL 827, *Standard for Central-Station Alarm Services*, 8th edition, 2014, revised 2016.

ANSI/UL 864, *Standard for Control Units and Accessories for Fire Alarm Systems*, 10th edition, 2014.

ANSI/UL 985, *Standard for Household Fire Warning System Units*, 6th edition, 2015.

ANSI/UL 1484, *Standard for Residential Gas Detectors*, 5th edition, 2016.

ANSI/UL 1638, *Visible Signaling Devices for Fire Alarm and Signaling Systems, Including Accessories*, 5th edition, 2016.

ANSI/UL 1730, *Standard for Smoke Detector Monitors and Accessories for Individual Living Units of Multifamily Residences and Hotel/Motel Rooms*, 4th edition, 2006, revised 2012.

ANSI/UL 1971, *Standard for Signaling Devices for the Hearing Impaired*, 3rd edition, 2002, revised 2013.

ANSI/UL 1981, *Central Station Automation Systems*, 3rd edition, 2014, revised 2015.

ANSI/UL 2017, *Standard for General-Purpose Signaling Devices and Systems*, 2nd edition, 2008, revised 2016.

ANSI/UL 2034, *Standard for Single and Multiple Station Carbon Monoxide Alarms,* February 2008, revised February 2009.

ANSI/UL 2075, *Standard for Gas and Vapor Detectors and Sensors,* 2nd edition, March 2013.

ANSI/UL 2572, *Mass Notification Systems*, 2nd edition, 2016.

ANSI/UL 60950, *Information Technology Equipment — Safety — Part 1: General Requirements*, 3rd edition, issued December 2005, including Amendment 1 issued December 2009 and Amendment 2 issued May 2013.

In previous editions of *NFPA 72*, the ANSI/UL documents were listed under ANSI Publications in 2.3.1. In the 2019 edition, all referenced UL documents are listed in 2.3.8, because they are in fact published by UL and not by ANSI.

2.3.9 Other Publications.

Merriam-Webster's Collegiate Dictionary, 11th edition, Merriam-Webster, Inc., Springfield, MA, 2003.

2.4 References for Extracts in Mandatory Sections.

NFPA 13, *Standard for the Installation of Sprinkler Systems,* 2016 edition.

NFPA 70®, *National Electrical Code®,* 2017 edition.

NFPA *101®*, *Life Safety Code®,* 2018 edition.

NFPA 654, *Standard for the Prevention of Fire and Dust Explosions from the Manufacturing, Processing, and Handling of Combustible Particulate Solids,* 2017 edition.

NFPA 1221, *Standard for the Installation, Maintenance, and Use of Emergency Services Communications Systems,* 2019 edition.

NFPA 5000®, *Building Construction and Safety Code®,* 2018 edition.

Section 2.4 provides reference information, including title and edition, for NFPA documents extracted throughout the mandatory sections of the Code as indicated by a reference in brackets [ ] following a section or paragraph.

Definitions

CHAPTER

3

All definitions that apply to subjects covered throughout the Code are in Chapter 3. In addition, where a particular term is not defined in Chapter 3 but is defined in *NFPA 70®*, *National Electrical Code®* (*NEC®*), the definition in the *NEC* applies, in accordance with 1.3.4. Otherwise, where terms are not defined, ordinary meanings as given in *Merriam-Webster's Collegiate Dictionary,* 11th edition, apply (see 2.3.9).

3.1 General.

The definitions contained in this chapter shall apply to the terms used in this Code. Where terms are not defined in this chapter or within another chapter, they shall be defined using their ordinarily accepted meanings within the context in which they are used. *Merriam-Webster's Collegiate Dictionary*, 11th edition, shall be the source for the ordinarily accepted meaning.

3.2 NFPA Official Definitions.

NFPA official definitions are the same in all NFPA documents. The definitions in Section 3.2 come from the *Regulations Governing the Development of NFPA Standards*. These terms are commonly found in NFPA technical committee documents, and the definitions cannot be altered without the approval of the NFPA Standards Council. Given that many NFPA documents rely on or cross-reference each other, the use of official definitions helps to facilitate the consistency of the documents.

3.2.1* Approved. Acceptable to the authority having jurisdiction.

A.3.2.1 Approved. The National Fire Protection Association does not approve, inspect, or certify any installations, procedures, equipment, or materials; nor does it approve or evaluate testing laboratories. In determining the acceptability of installations, procedures, equipment, or materials, the authority having jurisdiction may base acceptance on compliance with NFPA or other appropriate standards. In the absence of such standards, said authority may require evidence of proper installation, procedure, or use. The authority having jurisdiction may also refer to the listings or labeling practices of an organization that is concerned with product evaluations and is thus in a position to determine compliance with appropriate standards for the current production of listed items.

FAQ

Who approves equipment and installations?

The term *approved* has a specific definition (see 3.2.1) in the Code, which is "acceptable to the authority having jurisdiction." Only the authority having jurisdiction can approve equipment and installations. The authority having jurisdiction may choose to grant approval based on whether a product has received a listing and has been labeled by a qualified testing laboratory. However, listing or labeling alone does not constitute approval. (See 3.2.4 and 3.2.5 for the defined terms *labeled* and *listed*.)

Subsection 10.3.1 requires that all installed equipment be listed, and Section 1.5 permits the use of equivalent methods and equipment where equivalency has been demonstrated to the authority having

jurisdiction. The authority having jurisdiction may also grant approval on this basis. Refer to Section 10.20 and Chapter 7 for documentation and notification requirements.

The authority having jurisdiction should not disapprove equipment or installations simply because the technology proposed is not referenced in the edition of the Code being used. Often, developing technology outpaces its inclusion in the Code. Therefore, the authority having jurisdiction may need to reference this new edition of the Code for guidance when deciding to accept a system design, its equipment, or its installation.

3.2.2* Authority Having Jurisdiction (AHJ). An organization, office, or individual responsible for enforcing the requirements of a code or standard, or for approving equipment, materials, an installation, or a procedure.

A.3.2.2 Authority Having Jurisdiction (AHJ). The phrase "authority having jurisdiction," or its acronym AHJ, is used in NFPA documents in a broad manner, since jurisdictions and approval agencies vary, as do their responsibilities. Where public safety is primary, the authority having jurisdiction may be a federal, state, local, or other regional department or individual such as a fire chief; fire marshal; chief of a fire prevention bureau, labor department, or health department; building official; electrical inspector; or others having statutory authority. For insurance purposes, an insurance inspection department, rating bureau, or other insurance company representative may be the authority having jurisdiction. In many circumstances, the property owner or his or her designated agent assumes the role of the authority having jurisdiction; at government installations, the commanding officer or departmental official may be the authority having jurisdiction.

Any given physical property may have multiple authorities having jurisdiction that may be concerned with life safety, property protection, mission continuity, heritage preservation, and environmental protection. Some authorities having jurisdiction may impose additional requirements beyond those of the Code. If requirements for the installation of a specific system conflict, the installer must follow the more stringent requirements.

3.2.3* Code. A standard that is an extensive compilation of provisions covering broad subject matter or that is suitable for adoption into law independently of other codes and standards.

A.3.2.3 Code. The decision to designate a standard as a "code" is based on such factors as the size and scope of the document, its intended use and form of adoption, and whether it contains substantial enforcement and administrative provisions.

3.2.4 Labeled. Equipment or materials to which has been attached a label, symbol, or other identifying mark of an organization that is acceptable to the authority having jurisdiction and concerned with product evaluation, that maintains periodic inspection of production of labeled equipment or materials, and by whose labeling the manufacturer indicates compliance with appropriate standards or performance in a specified manner.

A label bearing the name of a testing organization (typically in the form of the firm's initials, such as UL, FM, or ETL) attached to the product provides an assurance to the authority having jurisdiction that the product is manufactured under a process that receives periodic oversight by the testing organization. More importantly, a product that is labeled must still be listed (see 3.2.5) for its intended use (see 10.3.1). A laptop charger commonly includes labels from several product testing labs, but the charger would typically be limited by its listing for use with a specific model of laptop and not be for use with a fire alarm control unit (FACU), emergency communications system (ECS), or carbon monoxide (CO) detection system.

3.2.5* Listed. Equipment, materials, or services included in a list published by an organization that is acceptable to the authority having jurisdiction and concerned with evaluation of

products or services, that maintains periodic inspection of production of listed equipment or materials or periodic evaluation of services, and whose listing states that either the equipment, material, or service meets appropriate designated standards or has been tested and found suitable for a specified purpose.

A.3.2.5 Listed. The means for identifying listed equipment may vary for each organization concerned with product evaluation; some organizations do not recognize equipment as listed unless it is also labeled. The authority having jurisdiction should utilize the system employed by the listing organization to identify a listed product.

3.2.6 Shall. Indicates a mandatory requirement.

3.2.7 Should. Indicates a recommendation or that which is advised but not required.

3.3 General Definitions.

The definitions in Section 3.3 are technical terms considered crucial to the proper understanding of this Code and apply only in this specific Code. These terms can be used or defined differently in another code or standard, but these definitions are the only ones that apply in the scope of this Code.

Each of these definitions has been assigned to a specific technical committee of *NFPA 72®*, *National Fire Alarm and Signaling Code®*. The committee assignment is indicated by a designation in parenthesis at the end of each definition where applicable. These designations correlate as follows:

SIG-FUN	Technical Committee on Fundamentals of Fire Alarm and Signaling Systems (Chapters 1, 7, 10, and Annex E)
SIG-PRO	Technical Committee on Protected Premises Fire Alarm and Signaling Systems (Chapters 12, 21, 23, and Annex C)
SIG-TMS	Technical Committee on Testing and Maintenance of Fire Alarm and Signaling Systems (Chapter 14 and Annex F)
SIG-IDS	Technical Committee on Initiating Devices for Fire Alarm and Signaling Systems (Chapter 17 and Annex B)
SIG-NAS	Technical Committee on Notification Appliances for Fire Alarm and Signaling Systems (Chapter 18 and Annex D)
SIG-ECS	Technical Committee on Emergency Communications Systems (Chapter 24 and Annex G)
SIG-SSS	Technical Committee on Supervising Station Fire Alarm and Signaling Systems (Chapter 26)
SIG-PRS	Technical Committee on Public Emergency Reporting Systems (Chapter 27)
SIG-HOU	Technical Committee on Single- and Multiple-Station Alarms and Household Fire Alarm Systems (Chapter 29 and Annex H)

Many of the definitions in the chapter include a reference to other NFPA codes. Brackets [ ] following a section or paragraph indicate material that has been extracted from another NFPA document. For example, 3.3.1 includes a reference to [**70:**100], which means that *Accessible (as applied to equipment)* has been extracted from *NFPA 70*, Article 100. Another example is in 3.3.22, where the reference is to [**5000**, 2018], which means *NFPA 5000*, the 2018 edition.

3.3.1 Accessible (as applied to equipment). Admitting close approach; not guarded by locked doors, elevation, or other effective means. [**70:**100] (SIG-FUN)

3.3.2 Accessible (as applied to wiring methods). Capable of being removed or exposed without damaging the building structure or finish or not permanently closed in by the structure or finish of the building. [**70:**100] (SIG-FUN)

3.3.3 Accessible, Readily (Readily Accessible). Capable of being reached quickly for operation, renewal, or inspections without requiring those to whom ready access is requisite to take actions such as to use tools (other and keys), to climb over or under, to remove obstacles, or to resort to portable ladders, and so forth. [**70**:100] (SIG-FUN)

These three definitions of *accessible* have been extracted from the *NEC*.

3.3.4 Accessible Spaces (as applied to detection coverage in Chapter 17). Spaces or concealed areas of construction that can be entered via openable panels, doors hatches, or other readily movable elements (e.g., ceiling tiles). (SIG-IDS)

The term *accessible spaces (as applied to detection coverage in Chapter 17)* is used in the requirements for total coverage in 17.5.3.1. The definition of this term is specific to this context, and it should be used rather than the definitions in 3.3.1 through 3.3.3.

3.3.5 Acknowledge. To confirm that a message or signal has been received, such as by the pressing of a button or the selection of a software command. (SIG-SSS)

3.3.6* Acoustically Distinguishable Space (ADS). An emergency communications system notification zone, or subdivision thereof, that might be an enclosed or otherwise physically defined space, or that might be distinguished from other spaces because of different acoustical, environmental, or use characteristics, such as reverberation time and ambient sound pressure level. (SIG-NAS)

System Design Tip

The concept of acoustically distinguishable space (ADS) permits the designation of spaces, defined by real or imaginary boundaries, where either the acoustics of the space or the signaling goals for the space are different than they are for other ADSs. Identifying spaces with common acoustical characteristics helps system designers better assess the needs for design and testing of each space. The term *acoustically distinguishable space* is used for the voice intelligibility requirements in 18.4.11. Also refer to the definition of the term *intelligible* in 3.3.145, the related annex explanation in A.3.3.145, Annex D, and "Voice Intelligibility for Emergency Voice/Alarm Communications Systems" at the end of Annex D.

Δ **A.3.3.6 Acoustically Distinguishable Space (ADS).** All parts of a building or area intended to have occupant notification are subdivided into ADSs as defined. Some ADSs might be designated to have voice communications capability and require that those communications be intelligible. Other spaces might not require voice intelligibility or might not be capable of reliable voice intelligibility. An ADS might have acoustical design features that are conducive for voice intelligibility, or it might be a space where voice intelligibility could be difficult or impossible to achieve. Each is still referred to as an ADS.

In smaller areas, such as those under 400 ft^2 (40 m^2), walls alone will define the ADS. In larger areas, other factors might have to be considered. In spaces that might be subdivided by temporary or movable partitions, such as ballrooms and meeting rooms, each individual configuration should be considered a separate ADS. Physical characteristics, such as a change in ceiling height of more than 20 percent, or a change in acoustical finish, such as carpet in one area and tile in another, would require those areas to be treated as separate ADSs. In larger areas, there might be noise sources that require a section to be treated as a separate ADS. Any significant change in ambient noise level or frequency might necessitate an area be considered a separate ADS.

In areas of 85 dBA or greater ambient sound pressure level, meeting the pass/fail criteria for intelligibility might not be possible, and other means of communications might be necessary. So, for example, the space immediately surrounding a printing press or other

high-noise machine might be designated as a separate ADS, and the design might call for some form of effective notification but not necessarily require the ability to have intelligible voice communications. The aisles or operator's control stations might be separate ADSs where intelligible voice communication might be desired.

Significant differences in furnishings — for example, an area with tables, desks, or low dividers adjacent to an area with high shelving — would require separate consideration. The entire desk area could be a single acoustic zone, whereas each area between shelving could be a unique zone. Essentially, any noteworthy change in the acoustical environment within an area will mandate consideration of that portion of the area to be treated as an acoustic zone. Hallways and stairwells will typically be considered as individual acoustic zones.

Spaces confined by walls with carpeting and acoustical ceilings can be deemed to be one ADS. An ADS should be an area of consistent size and material. A change of materials from carpet to hard tile, the existence of sound sources, such as decorative waterfalls, large expanses of glass, and changes in ceiling height, are all factors that might separate one ADS from another.

Each ADS might require different components and design features to achieve intelligible voice communication. For example, two ADSs with similar acoustical treatments and noise levels might have different ceiling heights. The ADS with the lower ceiling height might require more ceiling-mounted loudspeakers to ensure that all listeners are in a direct sound field *(see Figure A.3.3.6)*. Other ADSs might benefit from the use of alternate loudspeaker technologies, such as line arrays, to achieve intelligibility.

An ADS that differs from another because of the frequency and level of ambient noise might require the use of loudspeakers and system components that have a wider frequency bandwidth than conventional emergency communications equipment. However, designers should not use higher bandwidth loudspeakers in all locations, unless needed to overcome certain acoustic and ambient conditions. This is because the higher bandwidth appliance will require more energy to perform properly. This increases amplifier and wire size and power supply requirements.

In some spaces, it might be impractical to achieve intelligibility, and, in such a case, alternatives to voice evacuation might be required within such areas.

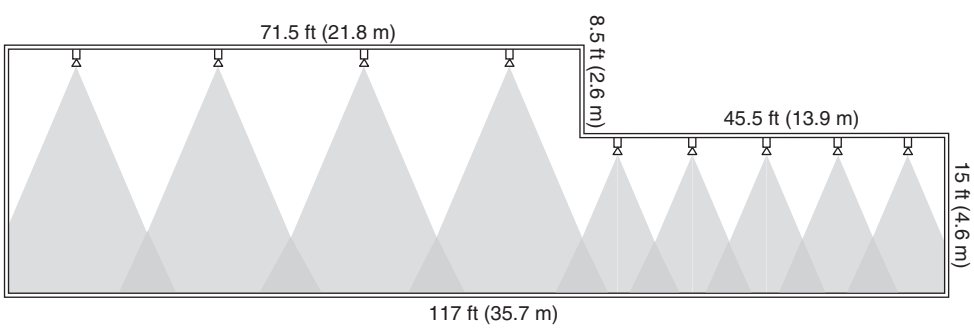

FIGURE A.3.3.6 *Illustration Demonstrating the Effect of Ceiling Height. (Source: R. P. Schifiliti Associates, Inc.)*

There might be some areas of a facility where there are several spaces of the same approximate size and the same acoustic properties. For example, there might be an office space with multiple individual offices, each with one loudspeaker. If one or two are satisfactorily tested, there is no need to test all of them for speech intelligibility.

Where a building is to have an ECS with voice intelligibility, all parts of a building or space are required to be divided into definable ADSs. See 18.4.11.

3.3.7 Active Multiplex System. A multiplexing system in which signaling devices such as transponders are employed to transmit status signals of each initiating device or initiating device circuit within a prescribed time interval so that the lack of receipt of such a signal can be interpreted as a trouble signal. (SIG-SSS)

Circuits of active multiplex systems use an interrogation and response routine to determine the status of a device or connected system control unit. Failure to receive a response signal from a device initiates a trouble signal. This interrogation routine serves to monitor the interconnecting path for integrity.

EXHIBIT 3.1

Device Programming Unit and Smoke Detector. (Source: Siemens Building Technologies, Fire Safety Division, Florham Park, NJ)

3.3.8 Addressable Device. A fire alarm system component with discrete identification that can have its status individually identified or that is used to individually control other functions. (SIG-IDS)

Addressable devices are either initiating devices or control/notification appliances that are capable of communicating a unique identification number or address to a control unit. This identification consists of a binary string of 1s and 0s that indicate the address or location of that device on the circuit. When the FACU polls an initiating device, the initiating device responds with its status and address. The device address allows for the location of the detector to be identified on a graphical floor display of a fire alarm system. In other systems, a simple room or location label can be displayed to describe the physical location of the addressable device. This differs from circuits with nonaddressable devices, which do not allow each specific device to be individually identified but rather, only the circuit or zone having multiple devices activates.

Similarly, the FACU can also address a control module(s) or appliance(s) and issue a command, such as a transfer of a relay contact, or activate addressable appliances connected to the system. Digital addresses for each device or appliance can be assigned by the system hardware or software. Examples of addressable devices are shown in Exhibits 3.1 and 3.2.

3.3.9 Adverse Condition. Any condition occurring in a communications or transmission channel that interferes with the proper transmission or interpretation, or both, of status change signals at the supervising station. *(See also 3.3.263.10, Trouble Signal.)* (SIG-SSS)

Adverse conditions include circuits or communications paths with open circuit faults or ground faults, electrical or radio frequency interference with communications paths, and circuit wiring with short-circuit faults.

EXHIBIT 3.2

Addressable Smoke Detector Showing Programming Switches. (Source: System Sensor Corp., St. Charles, IL)

3.3.10 Air Sampling–Type Detector. See 3.3.70, Detector.

3.3.11 Alarm. An indication of the existence of a condition that requires immediate response. (SIG-FUN)

FAQ

Is the term *alarm* intended to indicate only a condition that requires immediate response?

An alarm requires immediate response. With the inclusion of ECSs and the recognition of many different alarm system purposes, the definition of the term *alarm* is generic. Where a particular code requirement is intended to apply to a specific type of alarm, such as fire, the text will clearly state so. Otherwise, where the text says only "alarm," the requirement is intended to apply to all types of danger warnings. The terms *supervisory alarm* and *trouble alarm* are not appropriate to indicate supervisory or trouble conditions. These conditions are more appropriately termed supervisory and trouble "signals"

(see 3.3.263.9 and 3.3.263.10). The actions required for alarm conditions are very specific and are different from those of a supervisory or trouble condition.

N ***3.3.11.1 Carbon Monoxide Alarm.*** A single-or multiple-station alarm responsive to carbon monoxide (CO). (SIG-HOU)

NFPA 720

3.3.12 Alarm Box.

3.3.12.1 Auxiliary Alarm Box. An alarm box that can only be operated from one or more remote initiating devices or an auxiliary alarm system used to send an alarm to the communications center. (SIG-PRS)

FAQ What is the difference between an auxiliary alarm box and a master alarm box?

An auxiliary alarm box is used to transmit alarm signals from remote initiating devices or from auxiliary alarm systems to the communications center using the public emergency alarm reporting system when manual initiation of an alarm signal is not required. By contrast, a master alarm box includes the features of an auxiliary alarm box as well as a feature allowing manual operation. Refer to the definition of the term *publicly accessible alarm box* in 3.3.12.5. A protected premises fire alarm system connected to either an auxiliary alarm box or a master alarm box will actuate the box automatically when an alarm occurs. On actuation, the box transmits a coded signal to the communications center. Also see the commentary following 1.3.1(4).

3.3.12.2 Combination Fire Alarm and Guard's Tour Box. A manually operated box for separately transmitting a fire alarm signal and a distinctive guard patrol tour supervisory signal. (SIG-IDS)

3.3.12.3* Manual Fire Alarm Box. A manually operated device used to initiate a fire alarm signal. (SIG-IDS)

Operation of the manual fire alarm box, shown in Exhibit 3.3, requires one action. One design of a double-action fire alarm box requires the operator to strike a front-mounted hammer to break the glass and expose the recessed pull lever. Another fire alarm box might not use a hammer and glass but might have a push bar. The pull lever then operates as a single-action fire alarm box. Together, the push bar and the pull lever on this manual fire alarm box enable it to fit the definition of a double-action fire alarm box.

Whether one or two actions are involved, it is also permissible to have a listed protective cover, shown in Exhibit 3.4, over the manual fire alarm box. This cover must be lifted to gain access to the double-action fire alarm box and effectively creates a permitted third action for the user. In some institutional occupancies, the use of key-operated manual fire alarm boxes are permitted by local ordinances, building codes, and NFPA *101®*, *Life Safety Code®*.

N ***A.3.3.12.3 Manual Fire Alarm Box.*** The term *box* is currently the term used by building codes and nationally recognized testing laboratories. They are also called manual fire alarm stations, pull stations, and call points. (SIG-IDS)

3.3.12.4 Master Alarm Box. A publicly accessible alarm box that can also be operated by one or more remote initiating devices or an auxiliary alarm system used to send an alarm to the communications center. (SIG-PRS)

Public emergency alarm reporting system master alarm boxes, as shown in Exhibit 3.5, have an interface circuit that allows a protected premises FACU to actuate the master box when the system initiates a fire alarm signal.

EXHIBIT 3.3

Single-Action Manual Fire Alarm Box. (Source: The Protectowire Co., Pembroke, MA)

EXHIBIT 3.4

Protective Cover for Double-Action Manual Fire Alarm Box. (Source: Safety Technology International, Inc., Waterford MI)

EXHIBIT 3.5

Inside View of Master Alarm Box. (Source: R. B. Allen Co., North Hampton, NH)

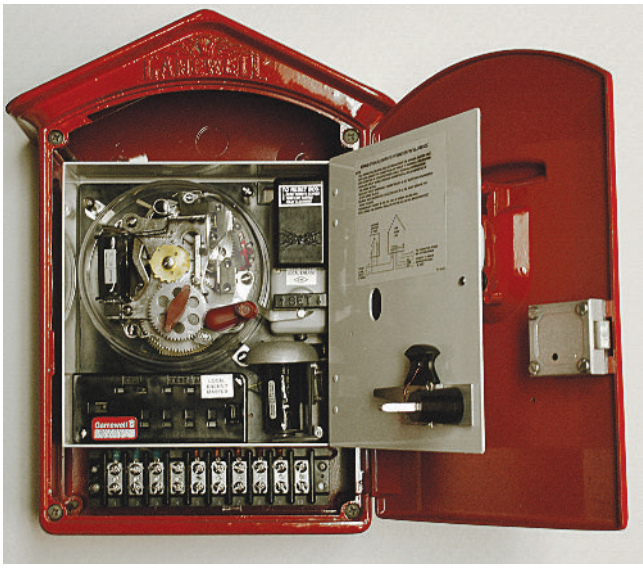

3.3.12.5 Publicly Accessible Alarm Box. An enclosure, accessible to the public, housing a manually operated transmitter used to send an alarm to the communications center. (SIG-PRS)

EXHIBIT 3.6

Publicly Accessible Alarm Box. (Source: Gamewell-FCI, Northford, CT)

Exhibit 3.6 shows a publicly accessible alarm box, also known as a municipal fire alarm box (street box).

3.3.13 Alarm Repeater System. A device or system for the purpose of automatically retransmitting alarm information received by the alarm processing equipment. (SIG-PRS)

3.3.14 Alarm Service. The service required following the receipt of an alarm signal. (SIG-SSS)

The action taken when an alarm signal is received is called the alarm service. The alarm service can include any or all of the following:

1. Response by a private fire brigade or public fire department
2. Dispatch of an alarm service provider's runner
3. Notification to the building owner and occupants
4. Notification to the authorities having jurisdiction

3.3.15 Alarm Signal. See 3.3.263, Signal.

3.3.16 Alarm System. See 3.3.111, Fire Alarm Systems; 3.3.291, Supervising Station Alarm Systems; 3.3.221, Public Emergency Alarm Reporting System; 3.3.90.1.2, In-Building Fire Emergency Voice/Alarm Communication System; and 3.3.90.1.3, In-Building Mass Notification System.

3.3.17 Alarm Verification Feature. A feature of automatic fire detection and alarm systems to reduce unwanted alarms wherein smoke detectors report alarm conditions for a minimum period of time, or confirm alarm conditions within a given time period after being reset, in order to be accepted as a valid alarm initiation signal. (SIG-PRO)

Alarm verification is applicable to smoke detectors only. The alarm verification feature can reduce nuisance alarm signals from transient conditions that actuate smoke detectors. The feature may be in individual smoke detectors, or it may be a feature of the FACU to which the smoke detectors are connected. It is not a means of reducing nuisance alarms due to the improper application of smoke detectors, such as installation in a location where they are exposed to unsuitable environmental conditions.

The alarm verification feature should not be confused with "alarm signal verification" addressed in 26.2.2. Alarm signal verification involves a process by which an alarm signal received at the supervising station can be verified by contacting authorized personnel at the protected premises before dispatching emergency response personnel.

3.3.18 Alert Tone. An attention-getting signal to alert occupants of the pending transmission of a voice message. (SIG-PRO)

Where voice announcements are used for anything other than complete evacuation, in-building fire voice/alarm communications systems precede the voice announcement with an alert tone to gain occupant attention before broadcast of the voice message. The alert tone is not considered an alarm signal, and the Code does not specify the form of the alert tone. Where voice announcements are used for complete evacuation, the announcement must be preceded by the emergency evacuation signal in accordance with 24.4.2.1.

3.3.19 Analog Initiating Device (Sensor). See 3.3.141, Initiating Device.

3.3.20* Ancillary Functions. Non-emergency activations of the fire alarm or mass notification audible, visual, and textual output circuits. (SIG-ECS)

N **A.3.3.20 Ancillary Functions.** Ancillary functions can include general paging, background music, or other non-emergency signals. (SIG-ECS)

An ECS can be used for numerous nonemergency uses, which makes the ECS more efficient and operationally more effective. A system in constant use should be maintained on a regular basis. Additionally, using the ECS for multiple nonemergency functions allows the owner to avoid duplication of systems.

3.3.21 Annunciator. A unit containing one or more indicator lamps, alphanumeric displays, or other equivalent means in which each indication provides status information about a circuit, condition, or location. (SIG-FUN)

An annunciator is used to provide a quick on-site visual point of information for where the alarm, CO, supervisory, or trouble signal is reported within the protected premises. The annunciator may be a simple lamp display with a labeled description of the zone, an alphanumeric display providing either a static or running information stream of the event, or a graphic representation of the protected premises and the location of the event. Some annunciators use computer-aided drafting (CAD) images to display the events in real time.

Exhibit 3.7 depicts a graphic annunciator. Early responders have a pictorial floor plan of the building with rooms properly labeled and LEDs representing initiating devices or zones throughout the facility.

3.3.22 Apartment Building. A building or portion thereof containing three or more dwelling units with independent cooking and bathroom facilities. (SIG-HOU) [**5000**, 2018]

EXHIBIT 3.7

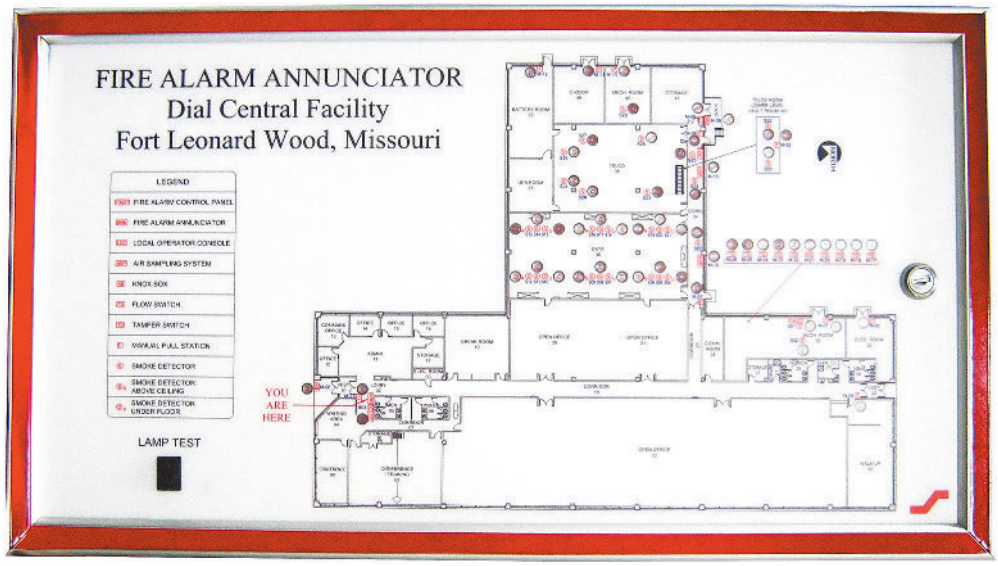

Graphic Annunciator. (Source: Space Age Electronics, Inc., Sterling, MA)

3.3.23 Audible Notification Appliance. See 3.3.182, Notification Appliance.

3.3.24 Automatic Extinguishing System Supervisory Device. See 3.3.141, Initiating Device.

3.3.25 Automatic Fire Detector. See 3.3.70, Detector.

3.3.26 Automatic Fire Extinguishing or Suppression System Operation Detector. See 3.3.70, Detector.

3.3.27 Autonomous Control Unit (ACU). See 3.3.63, Control Unit.

3.3.28 Auxiliary Alarm System. See 3.3.221, Public Emergency Alarm Reporting System.

3.3.29 Auxiliary Box. See 3.3.12, Alarm Box.

3.3.30* Average Ambient Sound Level. The root mean square, A-weighted, sound pressure level measured over the period of time that any person is present, or a 24-hour period, whichever time period is the lesser. (SIG-NAS)

A.3.3.30 Average Ambient Sound Level. The term *average ambient sound level* is also called the equivalent A-weighted sound level measured over *t* hours, where *t* is the time period over which the measurement is made. The standard industry symbol is $L_{A.eq.t}$. Where a measurement is taken over a 24-hour time period, the designation would be $L_{A.eq.24}$.

> The Code requires that the average be taken over a 24-hour period unless the time for actual occupancy is less than 24 hours.

N **3.3.31* Battery.** Two or more cells connected together electrically. (SIG-TMS)

> The definitions that relate to batteries are consistent with standard electrical engineering terminology and IEEE standards.

N **A.3.3.31 Battery.** Common usage permits this designation to be applied to a single cell used independently. Cells can be connected in series or parallel, or both, to provide the required operating voltage and current levels. (SIG-TMS)

N ***3.3.31.1 Battery Capacity.*** The electrical energy available from a fully charged battery expressed in ampere-hours. (SIG-TMS)

N ***3.3.31.2 Battery Charger.*** A device used to restore and maintain the charge of a secondary battery in which electrical energy is converted to chemical energy. (SIG-TMS)

N ***3.3.31.2.1 Float Charge.*** A constant-voltage charge applied to a battery to maintain it in a fully charged condition. (SIG-TMS)

N ***3.3.31.2.2 Fully Charged.*** A condition synonymous with 100 percent state of charge. *(See also 3.3.31.2.3, State of Charge.)* (SIG-TMS)

N ***3.3.31.2.3 State of Charge (SOC).*** The stored or remaining capacity of a battery at a given time expressed as a percentage of its rated capacity. (SIG-TMS)

N ***3.3.31.2.4 Trickle Charge.*** A continuous, low-rate, constant-current charge given to a cell or battery to keep the unit fully charged. *(See also 3.3.31.2.1, Float Charge.)* (SIG-TMS)

N ***3.3.31.3 Battery Load Test.*** A controlled discharge of a battery at a specified rate for a given period of time until a final voltage is achieved to determine battery capacity. (SIG-TMS)

N ***3.3.31.4 Battery Unit.*** See 3.3.41.3, Unit (Multi-Cell). (SIG-TMS)

N ***3.3.31.5 Rechargeable Battery.*** An electrochemical cell capable of being discharged and then recharged. (SIG-TMS)

3.3.32 Beam Construction. See 3.3.40, Ceiling Surfaces.

3.3.33 Building Fire Alarm System. See 3.3.111, Fire Alarm System.

•N **3.3.34 Building System Information Unit (BSIU).** A computer-based electronic device that is intended to display building information and execute system control functions, including fire system information display and control.

N **3.3.35 Carbon Monoxide Detection System.** A system or portion of a combination system that consists of a control unit, components, and circuits arranged to monitor and annunciate the status of carbon monoxide alarm initiating devices and to initiate the appropriate response to those signals. (SIG-PRO)

NFPA 720

N ***3.3.35.1 Combination Carbon Monoxide Detection System.*** A carbon monoxide detection system in which components are used, in whole or in part, in common with a non–carbon monoxide signaling system, and in which components are not used as part of a fire alarm system. (SIG-PRO)

N ***3.3.35.2 Household Carbon Monoxide Detection System.*** A system of devices that uses a control unit to produce an alarm signal in the household for the purpose of notifying the occupants of the presence of concentrations of carbon monoxide that could pose a life safety risk. (SIG-HOU)

3.3.36 Carrier. High-frequency energy that can be modulated by voice or signaling impulses. (SIG-SSS)

3.3.37 Carrier System. A means of conveying a number of channels over a single path by modulating each channel on a different carrier frequency and demodulating at the receiving point to restore the signals to their original form. (SIG-SSS)

3.3.38 Ceiling. The upper surface of a space, regardless of height. Areas with a suspended ceiling have two ceilings, one visible from the floor and one above the suspended ceiling. (SIG-IDS)

3.3.38.1 Level Ceilings. Ceilings that have a slope of less than or equal to 1 in 8. (SIG-IDS)

3.3.38.2 Sloping Ceiling. A ceiling that has a slope of more than 1 in 8. (SIG-IDS)

3.3.38.3* Sloping Peaked-Type Ceiling. A ceiling in which the ceiling slopes in two directions from the highest point. Curved or domed ceilings can be considered peaked with the slope figured as the slope of the chord from highest to lowest point. (SIG-IDS)

A.3.3.38.3 Sloping Peaked-Type Ceiling. Refer to Figure A.17.6.3.4(a) for an illustration of smoke or heat detector spacing on peaked-type sloped ceilings.

3.3.38.4* Sloping Shed-Type Ceiling. A ceiling in which the high point is at one side with the slope extending toward the opposite side. (SIG-IDS)

A.3.3.38.4 Sloping Shed-Type Ceiling. Refer to Figure A.17.6.3.4(b) for an illustration of smoke or heat detector spacing on shed-type sloped ceilings.

3.3.39 Ceiling Height. The height from the continuous floor of a room to the continuous ceiling of a room or space. (SIG-IDS)

FAQ How is ceiling height measured?

Where a ceiling is supported by beams, joists, or open web beams (bar joists), the ceiling height is measured from the floor deck to the bottom surface of the ceiling supported by the beams or joists. Paragraphs 17.6.3.4.1.1 and 17.6.3.4.1.2 address how to determine the height of a sloped ceiling when spacing heat detectors.

3.3.40 Ceiling Surfaces.

The ceiling design can affect the flow of smoke and hot combustion product gases from the fire to the location of a heat or smoke detector. The ceiling design can also affect the speed of response of spot-type smoke and heat detectors. The configuration of joists, beams, or other ceiling features (e.g., enclosing walls) can potentially delay or enhance the transport of smoke or heat to the detectors. Categorizing ceiling surfaces is necessary because different detector location and spacing criteria apply, depending on the size and spacing of downward-projection beams or joists.

3.3.40.1 Beam Construction. Ceilings that have solid structural or solid nonstructural members projecting down from the ceiling surface more than 4 in. (100 mm) and spaced more than 36 in. (910 mm), center to center. (SIG-IDS)

3.3.40.2 Girder. A support for beams or joists that runs at right angles to the beams or joists. If the top of the girder is within 4 in. (100 mm) of the ceiling, the girder is a factor in determining the number of detectors and is to be considered a beam. If the top of the girder is more than 4 in. (100 mm) from the ceiling, the girder is not a factor in detector location. (SIG-IDS)

3.3.40.3* Smooth Ceiling. A ceiling surface uninterrupted by continuous projections, such as solid joists, beams, or ducts, extending more than 4 in. (100 mm) below the ceiling surface. (SIG-IDS)

A.3.3.40.3 Smooth Ceiling. Open truss constructions are not considered to impede the flow of fire products unless the upper member, in continuous contact with the ceiling, projects below the ceiling more than 4 in. (100 mm).

3.3.40.4 Solid Joist Construction. Ceilings that have solid structural or solid nonstructural members projecting down from the ceiling surface for a distance of more than 4 in. (100 mm) and spaced at intervals of 36 in. (910 mm) or less, center to center. (SIG-IDS)

Ceiling beams will impede the flow of products of combustion. An example of beam ceiling construction is shown in Exhibit 3.8. The solid structural members project down more than 4 in. (100 mm) and are spaced at intervals of more than 36 in. (910 mm). The extent to which this impacts the spacing of fire detectors depends on several factors, including ceiling height, beam depth, beam spacing, and room or enclosure size.

Solid joists, whether structural or nonstructural, impede the flow of products of combustion in the direction perpendicular to the joists but enhance the flow in the direction parallel to the joists. An example of solid joist ceiling construction is shown in Exhibit 3.9. The solid structural members project down more than 4 in. (100 mm) and are spaced at intervals 36 in. (910 mm) or less. Web or bar joists are not considered solid joists unless the top chord is over 4 in. (100 mm) deep, in which case, only the top chord is considered a ceiling obstruction.

An example of an open truss ceiling with a top cord 4 in. (100 mm) or less in depth that qualifies as smooth ceiling construction is shown in Exhibit 3.10. The top cord permits products of combustion to flow readily across the ceiling. If the top cord is greater than 4 in. (100 mm), it is considered a joist or beam, depending on the spacing of the trusses.

N **3.3.41 Cell.** The basic electrochemical unit, characterized by an anode and a cathode, used to receive, store, and deliver electrical energy. [**70:**480] (SIG-TMS)

The definitions that relate to batteries are consistent with standard electrical engineering terminology and IEEE standards.

N ***3.3.41.1 Primary (Dry) Cell.*** A nonrechargeable electrochemical cell requiring periodic replacement, such as a 9-volt alkaline cell. (SIG-FUN)

N ***3.3.41.2 Starved Electrolyte Cell.*** A cell in which liquid electrolyte is immobilized, also known as an absorbed glass mat (AGM) cell or a gelled electrolyte cell (gel cell). (SIG-TMS)

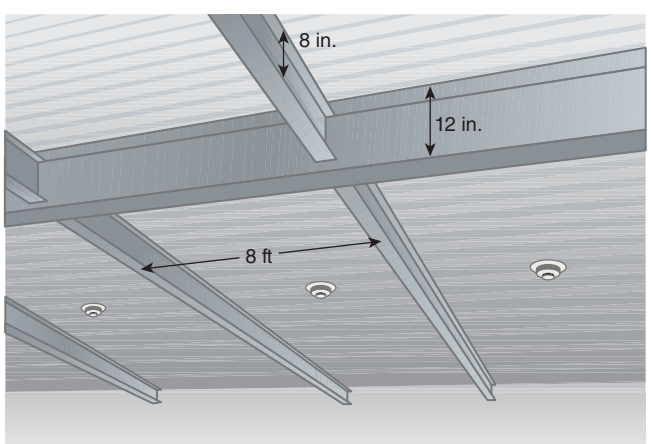

EXHIBIT 3.8

A Condition that Classifies as Beam Ceiling Construction.

EXHIBIT 3.9

A Condition that Classifies as Solid Joist Ceiling Construction.

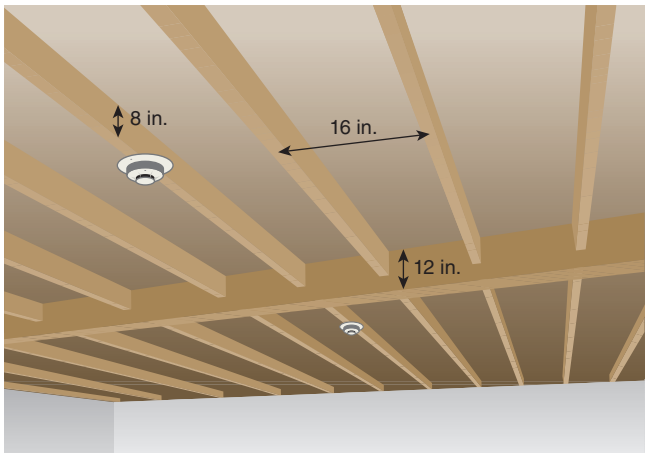

EXHIBIT 3.10

A Condition that Classifies as Smooth Ceiling Construction.

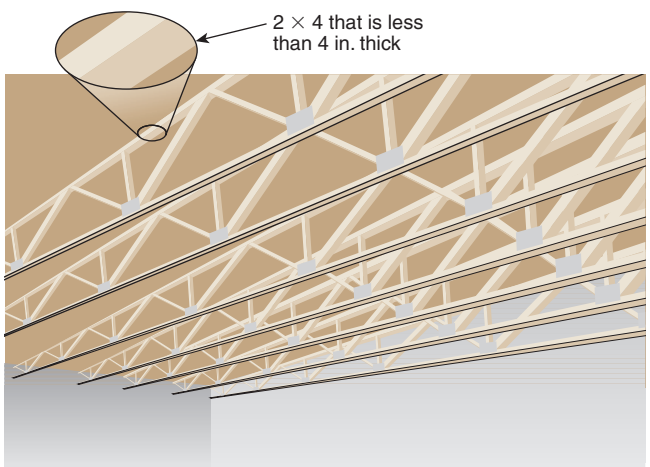

N ***3.3.41.2.1 Absorbed Glass Mat (AGM) Cell.*** A cell in which the liquid electrolyte is immobilized in fiberglass or polymeric fiber separators. (SIG-TMS)

N ***3.3.41.2.2 Gelled Electrolyte Cell (Gel Cell).*** A cell in which the electrolyte is immobilized by addition of a gelling agent. (SIG-TMS)

N ***3.3.41.3 Unit (Multi-Cell).*** Multiple cells in a single container, such as a 12-volt unit composed of six 2-volt cells. (SIG-TMS)

N ***3.3.41.4* Valve-Regulated Lead-Acid (VRLA) Cell.*** A sealed lead-acid cell with a valve that opens to the atmosphere when the internal pressure in the cell exceeds atmospheric pressure by a preselected amount. (SIG-TMS)

N ***A.3.3.41.4 Valve-Regulated Lead-Acid (VRLA) Cell.*** VRLA cells provide a means for recombination of internally generated oxygen and the suppression of hydrogen gas evolution to limit water consumption. (SIG-TMS)

3.3.42 Central Station. See 3.3.290.1, Central Supervising Station.

3.3.43 Central Station Alarm System. See 3.3.291.1, Central Station Service Alarm System.

3.3.44 Central Station Service. See 3.3.292, Supervising Station Service.

3.3.45 Central Station Service Alarm System. See 3.3.291, Supervising Station Alarm Systems.

3.3.46 Central Supervising Station. See 3.3.290, Supervising Station.

3.3.47 Channel. A path for voice or signal transmission that uses modulation of light or alternating current within a frequency band. (SIG-SSS)

Figure A.26.1.1 provides an illustration of where a *communications channel* (3.3.47.1) and *transmission channel* (3.3.47.3) apply when used in transmitting signals to a supervising station.

3.3.47.1 Communications Channel. A circuit or path connecting a subsidiary station(s) to a supervising station(s) over which signals are carried. (SIG-SSS)

3.3.47.2* Radio Channel. A band of frequencies of a width sufficient to allow its use for radio communications. (SIG-SSS)

A.3.3.47.2 Radio Channel. The width of the channel depends on the type of transmissions and the tolerance for the frequency of emission. Channels normally are allocated for radio transmission in a specified type for service by a specified transmitter.

3.3.47.3 Transmission Channel. A circuit or path connecting transmitters to supervising stations or subsidiary stations on which signals are carried. (SIG-SSS)

3.3.48 Circuit. Either a means of providing power or a connection path between locations *(see 3.3.197)*. (SIG-PRO)

3.3.49 Circuit Interface. See 3.3.146, Interface.

3.3.50 Cloud Chamber Smoke Detection. See 3.3.276, Smoke Detection.

3.3.51* Coded. An audible or visual signal that conveys several discrete bits or units of information. (SIG-NAS)

Table A.10.11.4 provides recommended assignments for simple zone-coded signals. In addition to the examples described in Table A.10.11.4, textual signals may use words that are familiar only to those concerned with response to the signal. This practice avoids general alarm notification and disruption of the occupants. Hospitals often use this type of signal. For example, to hospital occupants who do not know the code words, the message "Paging Dr. Firestone, Dr. Firestone, Building 4 West Wing" might sound like a normal paging announcement, but the coded message is that there is a fire in the West Wing of Building 4. In effect, this is private mode signaling (see 18.4.5).

A.3.3.51 Coded. Notification signal examples are numbered strokes of an impact-type appliance and numbered flashes of a visual appliance.

3.3.52 Combination Detector. See 3.3.70, Detector.

3.3.53 Combination Emergency Communications Systems. See 3.3.91, Emergency Communications Systems — Combination.

3.3.54 Combination Fire Alarm and Guard's Tour Box. See 3.3.12, Alarm Box.

3.3.55 Combination System. See 3.3.111, Fire Alarm System.

3.3.56 Common Talk Mode. See 3.3.301, Talk Mode.

3.3.57* Communications Center. A building or portion of a building that is specifically configured for the primary purpose of providing emergency communications services or public safety answering point (PSAP) services to one or more public safety agencies under the authority or authorities having jurisdiction. [**1221,** 2016] (SIG-PRS)

A.3.3.57 Communications Center. Examples of functions of a communications center are as follows:

(1) Communications between the public and the communications center
(2) Communications between the communications centers, the emergency response agency (ERA), and emergency response facilities (ERFs)
(3) Communications within the ERA and between different ERAs [**1221:**A.3.3.19]
(4) Communications with the public emergency alarm reporting system

The central operating part of the public emergency alarm reporting system is usually located at the communications center.

A municipal government may choose to locate the communications center at the main fire department station, public safety complex, specially designed communications building, or another suitably designed location. The communications center may include the public safety answering point (PSAP) for the community's 9-1-1 emergency telephone system. NFPA 1221, *Standard for the Installation, Maintenance, and Use of Emergency Services Communications Systems*, provides requirements for the installation, performance, operation, and maintenance of communications systems and facilities. A *communications center*, referred to in both *NFPA 72* and NFPA 1221, is shown in Exhibit 3.11.

FAQ Where do public emergency alarm reporting systems terminate?

Public emergency alarm reporting systems (see Chapter 27) terminate at the communications center.

3.3.58 Communications Channel. See 3.3.47, Channel.

3.3.59 Communications Circuit. Any signaling path of an emergency communications system that carries voice, audio, data, or other signals. (SIG-ECS)

EXHIBIT 3.11

A Communications Center. (Source: Lakes Region Mutual Fire Aid Association, Laconia, NH; photo by Deputy Chief Douglas M. Aiken)

In electronics, a circuit is a path connecting two or more points along which an electrical current can be carried. In telecommunications, a circuit is a discrete (specific) path between two or more points along which signals can be carried. Unless otherwise qualified, a circuit is a physical path, consisting of one or more wires (or wireless paths) and possibly intermediate switching points.

3.3.60 Communications Cloud. The area in the communications path that is supported by providers of communications services not governed under the scope of *NFPA 72* in which signals travel between a protected property and a monitoring station. Depending on the type of transmission that is used, signals can travel on a single defined route or through various routes depending on what is available when the signal is initiated. (SIG-SSS)

The communications cloud includes communications pathways outside of the protected premises and the supervising station, which are not under the purview of this Code. This would include, but may not be limited to, hardwire, fiber optic, and radio signal communication paths.

3.3.61* Condition. A situation, environmental state, or equipment state of a fire alarm or signaling system. (SIG-FUN)

A.3.3.61 Condition. See Figure A.3.3.61 that describes the Condition — Signal — Response model used in this Code. There are varying degrees of conditions that require varying degrees of response that are initiated by various types of signals. A condition could be present without being detected (either because detection of the condition was not required or was not feasible), in which case, there is no signal or response. A condition could be detected, resulting in a signal, but there could be no required response. A signal could be generated erroneously in the absence of a condition (due to malfunction or other causes) resulting in an unwarranted response. The condition is normal when no abnormal conditions are present.

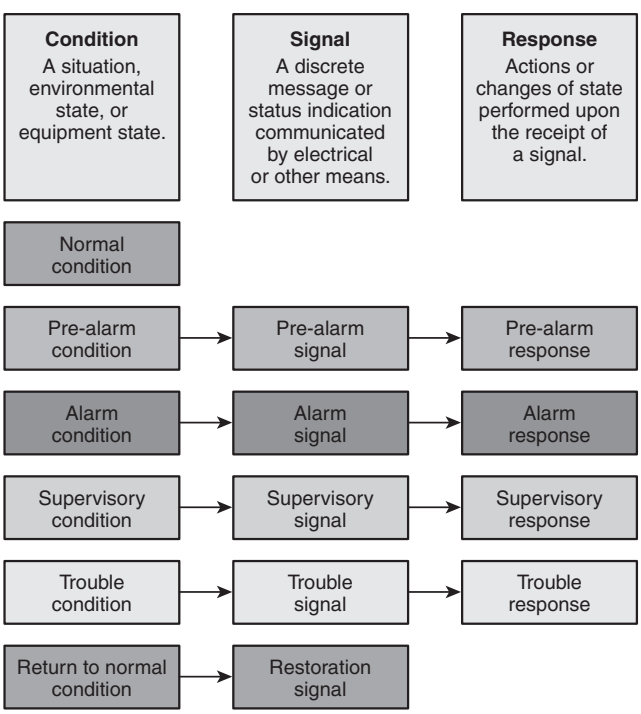

FIGURE A.3.3.61 *Condition-Signal-Response Model.*

3.3.61.1 Abnormal (Off-Normal) Condition. A situation, environmental state, or equipment state that warrants some type of signal, notification, communication, response, action, or service. (SIG-FUN)

Various off-normal conditions may be a result of occurrences — either ambient (presence of fire or smoke, freezing temperatures, etc.) or related to equipment (faults in circuits, loss of power, closed valves, etc.) — that may trigger a signal, usually at the control unit equipment. This may further result in the execution of a desired response, depending on the emergency plan for the location (e.g., summoning emergency forces, specific responders, or technicians). Certain changes in conditions might not result in a system immediately going off-normal if the installed system was not designed to detect the change (e.g., smoldering fire in a building not provided with smoke detection or insufficient heat present to activate other detection technologies). For definitions of the terms *response* and *signal*, also see 3.3.250 and 3.3.263.

3.3.61.1.1* Alarm Condition. An abnormal condition that poses an immediate threat to life, property, or mission. (SIG-FUN)

A.3.3.61.1.1 Alarm Condition. When an alarm condition is present, damage to life or property has begun or will begin. Detection, signaling, and response, effected quickly, can limit or prevent damage. The extent of damage is often reduced with inverse proportion to the time required for detection, signaling, and response. The amount of time available for detection, signaling, and response is generally not a known quantity and damage might not be preventable. Alarm conditions can result due to the presence of fire, chemicals, freezing temperatures, or other circumstances.

3.3.61.1.2* Pre-Alarm Condition. An abnormal condition that poses a potential threat to life, property, or mission, and time is available for investigation. (SIG-FUN)

A.3.3.61.1.2 Pre-Alarm Condition. Some examples of pre-alarm conditions include the following: the presence of a very small amount of visible smoke (at levels below listed initiating device alarm thresholds), the presence of a smoke-like odor, a somewhat elevated temperature, and a gradually increasing temperature. Any abnormal condition that typically precedes an alarm condition can be termed a *pre-alarm condition*.

The amount of time available for investigating the cause of a pre-alarm condition is not a known quantity. If conditions deteriorate to the point of alarm, time is no longer available for investigation. Pre-alarm conditions might or might not progress to alarm conditions.

The detection of pre-alarm conditions may be desirable in some occupancies, particularly if environmental conditions are ordinarily well controlled (e.g., integrated circuit fabrication facility) and personnel are trained to respond appropriately. In other occupancies, the detection of pre-alarm conditions may not be desirable or necessary.

The term *pre-alarm condition* is different from the terms *positive alarm sequence*, *alarm verification*, and *pre-signal*.

3.3.61.1.3* Supervisory Condition. An abnormal condition in connection with the supervision of other systems, processes, or equipment. (SIG-FUN)

A.3.3.61.1.3 Supervisory Condition. A supervisory condition occurs when one system supervises another system, process, or equipment for failure or impairment, and a functional failure or impairment to operation of the supervised system, process or equipment has occurred. A supervisory condition might be a regularly occurring and expected event such as a valve closed on a sprinkler system. A closed valve is an abnormal condition for the sprinkler system, but it does not constitute a trouble condition in the fire alarm or signaling system.

In some cases, a fault in one system, causing a trouble condition in that system, results in a supervisory condition in another system because the other system is supervising some function of the faulted system, and the supervised function has been impaired. In those cases, both supervisory and trouble conditions exist at the same time.

Some examples of supervisory conditions can include the following:

(1) An event causing the activation of a supervisory initiating device used to monitor an environmental parameter, system element, component, or function, whose failure poses a risk to life, property, or mission (e.g., sprinkler valve closed, water tank low water level, low building temperature, ECS impairment, and so forth).
(2) The failure of a guard to remain within established constraints while on tour, usually indicated by the absence of a guard's tour supervisory signal within prescribed timing requirements, or the presence of a guard's tour supervisory signal outside of prescribed sequencing requirements, or the presence of a delinquency signal.
(3) Public safety radio communications enhancement system antenna malfunction, signal booster failure, or battery depletion.
(4) In some cases, the presence of smoke in an HVAC duct or in other places as defined by the authority having jurisdiction.

3.3.61.1.4* Trouble Condition. An abnormal condition in a system due to a fault. (SIG-FUN)

A.3.3.61.1.4 Trouble Condition. A trouble condition is a fault in the fire alarm or signaling system. The system or some aspect of it is somehow broken. This is different from a supervisory condition that is an abnormal condition in a system that is supervised by the fire alarm or signaling system. Abnormal conditions, such as a closed valve in a sprinkler system, not caused by a fault are not considered trouble conditions.

In some cases, a fault in one system, causing a trouble condition in that system, results in a supervisory condition because another system is supervising some function of the faulted system, and the supervised function has been impaired by the fault *(see A.3.3.61.1.3, Supervisory Condition)*. In those cases, both supervisory and trouble conditions exist at the same time.

3.3.61.2 Normal Condition. Circuits, systems, and components are functioning as designed and no abnormal condition exists. (SIG-FUN)

3.3.62 Contiguous Property. See 3.3.213, Property.

3.3.63 Control Unit. A system component that monitors inputs and controls outputs through various types of circuits. (SIG-PRO)

The term *control unit* is not limited to fire alarm systems applications. Applications can include systems such as those used for mass notification or emergency communication. A control unit used in a fire alarm system falls under the term *fire alarm control unit (FACU)*, defined in 3.3.108.

3.3.63.1* Autonomous Control Unit (ACU). The primary control unit for an in-building mass notification system. (SIG-ECS)

A.3.3.63.1 Autonomous Control Unit (ACU). Although an ACU might incorporate provisions for messages or signals from external sources, the ACU is fully capable of building controls without the need for sources outside the building. An ACU is allowed to be located within a primary building and supply circuits to immediately adjacent support buildings such as detached storage buildings. Larger buildings will generally have their own ACUs to allow individual control within each building.

An autonomous control unit (ACU) for an in-building mass notification system (MNS) is analogous to a FACU for a protected premises fire alarm system.

3.3.63.2 Emergency Communications Control Unit (ECCU). A system capable of sending mass notification messages to individual buildings, zones of buildings, individual outdoor loudspeaker arrays, or zones of outdoor loudspeaker arrays; or a building, multiple buildings, outside areas, or a combination of these. (SIG-ECS)

An emergency communications control unit (ECCU) is a control unit that serves the central control station and assigns priorities to all transmitted signals between the central control station and selectable locations, including individual buildings, portions of buildings, multiple buildings, outdoor areas, portions of outdoor areas, other ECCUs, or any combination of these.

3.3.63.3 Fire Alarm Control Unit (FACU). See 3.3.108, Fire Alarm Control Unit (FACU).

3.3.63.4 Wireless Control Unit. A component that transmits/receives and processes wireless signals. (SIG-PRO)

3.3.64 Day-Care Home. A building or portion of a building in which more than 3 but not more than 12 clients receive care, maintenance, and supervision, by other than their relative(s) or legal guardian(s), for less than 24 hours per day. [***101***, 2018] (SIG-HOU)

3.3.65 Dedicated Function Fire Alarm Control Unit. See 3.3.108, Fire Alarm Control Unit (FACU).

3.3.66 Dedicated Function Fire Alarm System. See 3.3.111, Fire Alarm System.

3.3.67 Deficiency. A condition that interferes with the service or reliability for which the part, system, or equipment was intended. (SIG-TMS)

Examples of deficiencies are dead or missing batteries, a circuit fault condition affecting operation of the system, a missing or damaged fire detector, or a missing or damaged notification appliance.

3.3.68 Delinquency Signal. See 3.3.263, Signal.

N **3.3.69* Design Professional.** An individual who is registered or licensed to practice their respective design profession as defined by the statutory requirements of the professional registration laws of the jurisdiction in which the project is to be constructed, or other professional with qualifications or credentials acceptable to the jurisdiction in which the project is to be constructed. (SIG-ECS)

N **A.3.3.69 Design Professional.** An architect/engineer working for the owner in the preparation of bid documents, overseeing systems covered by this standard as part of a design-build project, or an engineer performing a risk analysis, would be considered a design professional under the requirements of this standard. (SIG-ECS)

3.3.70 Detector. A device suitable for connection to a circuit that has a sensor that responds to a physical stimulus such as gas, heat, or smoke. (SIG-IDS)

3.3.70.1 Air Sampling–Type Detector. A detector that consists of a piping or tubing distribution network that runs from the detector to the area(s) to be protected. An aspiration fan in the detector housing draws air from the protected area back to the detector through air sampling ports, piping, or tubing. At the detector, the air is analyzed for fire products. (SIG-IDS)

FAQ

What is the difference between passive and active air sampling?

Air sampling detectors are either passive or active. Spot-type detectors are typically considered passive detection devices. A spot-type smoke or heat detection device requires the energy of the fire to transport sufficient levels of smoke or heat to the location of the detector. A spot-type detector passively awaits the arrival of smoke and heat before it can sense the threat of a fire.

Active air sampling involves the presence of a sampling pipe network, which collects air through sampling holes and transports it from the protected space to the detector, where it's tested for the presence of smoke particulate, as illustrated in Exhibit 3.12. The system is continuously sampling the air of the protected area/location for the presence of smoke. Active air sampling smoke detectors are shown in Exhibit 3.13. See the commentary following A.17.7.3.2, 17.7.3.6.1.1, and A.17.7.3.6.1.1.

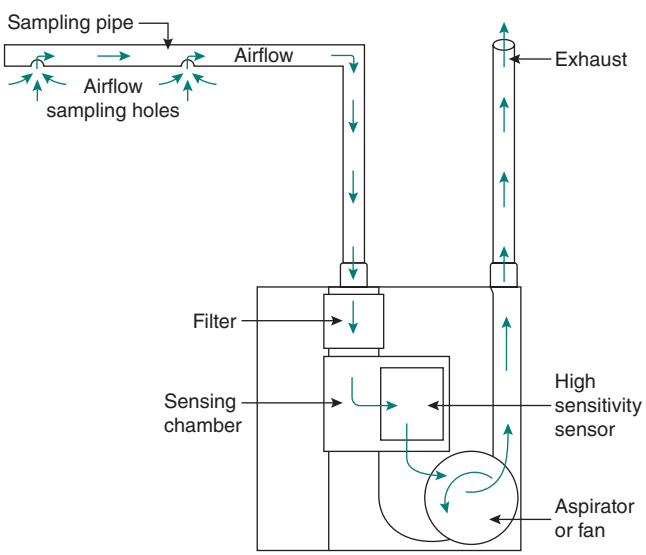

EXHIBIT 3.12

Principal of Active Air Sampling with an Air Aspirating Smoke Detector. (Source: System Sensor Corp., St. Charles, IL)

EXHIBIT 3.13

Air Sampling Smoke Detectors. (Source: Xtralis, Inc., Norwell, MA)

3.3.70.2 Automatic Fire Detector. A device designed to detect the presence of a fire signature and to initiate action. For the purpose of this Code, automatic fire detectors are classified as follows: Automatic Fire Extinguishing or Suppression System Operation Detector, Fire–Gas Detector, Heat Detector, Other Fire Detectors, Radiant Energy–Sensing Fire Detector, and Smoke Detector. (SIG-IDS)

3.3.70.3 Automatic Fire Extinguishing or Suppression System Operation Detector. A device that automatically detects the operation of a fire extinguishing or suppression system by means appropriate to the system employed. (SIG-IDS)

Examples of automatic fire extinguishing or suppression system operation alarm initiating devices are agent discharge flow switches and agent discharge pressure switches.

3.3.70.4* Combination Detector. A device that either responds to more than one of the fire phenomena or employs more than one operating principle to sense one of these phenomena. Typical examples are a combination of a heat detector with a smoke detector or a combination rate-of-rise and fixed-temperature heat detector. This device has listings for each sensing method employed. (SIG-IDS)

A.3.3.70.4 Combination Detector. These detectors do not utilize a mathematical evaluation principle of signal processing more than a simple "or" function. Normally, these detectors provide a single response resulting from either sensing method, each of which operates independent of the other. These detectors can provide a separate and distinct response resulting from either sensing method, each of which is processed independent of the other.

A typical example of a combination detector might be a unit that contains both ionization and photoelectric smoke detection chambers. Using both types of detection in a single device can provide for a more optimum response to a fire. The characteristics of an ionization detector make it more suitable for detection of fast-flaming fires that are characterized by combustion particles in the 0.01 to 0.3 micron size range, while photoelectric smoke detectors more easily detect slow, smoldering fires that are characterized by particulate in the 0.3 to 10.0 micron size range. Each detection method in a combination detector carries a separate listing and can provide a separate alarm signal.

See the commentary following A.3.3.70.13 for a comparison of combination detectors, multi-criteria detectors, and multi-sensor detectors.

Exhibits 3.14 and 3.15 illustrate two common combination detectors.

EXHIBIT 3.14

Combination Rate-of-Rise and Fixed-Temperature Heat Detector (Mechanical). (Source: Kidde-Fenwal, Ashland, MA; photo courtesy of Mammoth Fire Alarms, Inc., Lowell, MA)

3.3.70.5 Electrical Conductivity Heat Detector. A line-type or spot-type sensing element in which resistance varies as a function of temperature. (SIG-IDS)

3.3.70.6 Fire–Gas Detector. A device that detects gases produced by a fire. (SIG-IDS)

Examples of fire gases include hydrogen chloride (HCl) and CO. Fire–gas detectors designed for CO detection should not be confused with CO warning equipment designed to prevent CO poisoning by alerting occupants to the presence of CO in the home.

EXHIBIT 3.15

Combination Rate-of-Rise and Fixed-Temperature Heat Detector (Electronic). (Source: System Sensor Corp., St. Charles, IL)

3.3.70.7* Fixed-Temperature Detector. A device that responds when its operating element becomes heated to a predetermined level. (SIG-IDS)

A.3.3.70.7 Fixed-Temperature Detector. The difference between the operating temperature of a fixed-temperature device and the surrounding air temperature is proportional to the rate at which the temperature is rising. The rate is commonly referred to as *thermal lag*. The air temperature is always higher than the operating temperature of the device.

Typical examples of fixed-temperature sensing elements are as follows:

(1) *Bimetallic.* A sensing element comprised of two metals that have different coefficients of thermal expansion arranged so that the effect is deflection in one direction when heated and in the opposite direction when cooled.
(2) *Electrical Conductivity.* A line-type or spot-type sensing element in which resistance varies as a function of temperature.
(3) *Fusible Alloy.* A sensing element of a special composition metal (eutectic) that melts rapidly at the rated temperature.
(4) *Heat-Sensitive Cable.* A line-type device in which the sensing element comprises, in one type, two current-carrying wires separated by heat-sensitive insulation that softens at the rated temperature, thus allowing the wires to make electrical contact. In another type, a single wire is centered in a metallic tube, and the intervening space is filled with a substance that becomes conductive at a critical temperature, thus establishing electrical contact between the tube and the wire.
(5) *Liquid Expansion.* A sensing element comprising a liquid that is capable of marked expansion in volume in response to an increase in temperature.

Exhibit 3.16 illustrates a typical fixed-temperature heat detector.

EXHIBIT 3.16

Fixed-Temperature (Nonrestorable) Heat Detector. (Source: Kidde-Fenwal, Ashland, MA)

3.3.70.8* Flame Detector. A radiant energy–sensing fire detector that detects the radiant energy emitted by a flame. *(Refer to A.17.8.2.)* (SIG-IDS)

A.3.3.70.8 Flame Detector. Flame detectors are categorized as ultraviolet, single wavelength infrared, ultraviolet infrared, or multiple wavelength infrared.

Exhibit 3.17 illustrates a typical flame detector.

3.3.70.9 Gas Detector. A device that detects the presence of a specified gas concentration. Gas detectors can be either spot-type or line-type detectors. (SIG-IDS)

3.3.70.10 Heat Detector. A fire detector that detects either abnormally high temperature or rate-of-temperature rise, or both. (SIG-IDS)

Many types of heat detectors are available. Exhibit 3.18 shows a typical spot-type heat detector. For descriptions of other types of heat detectors, see the definitions of the terms under 3.3.70: *electrical conductivity heat detector, fixed-temperature detector* (see Exhibit 3.16), *line-type detector, pneumatic rate-of-rise tubing heat detector, rate compensation detector,* and *rate-of-rise detector*. Also refer to the definition of the term *nonrestorable initiating device* in 3.3.141.3.

EXHIBIT 3.17

Flame Detector. (Source: Det-Tronics Corp., Minneapolis, MN)

3.3.70.11 Line-Type Detector. A device in which detection is continuous along a path. Typical examples are rate-of-rise pneumatic tubing detectors, projected beam smoke detectors, and heat-sensitive cable. (SIG-IDS)

3.3.70.12* Multi-Criteria Detector. A device that contains multiple sensors that separately respond to physical stimulus such as heat, smoke, or fire gases, or employs more than one sensor to sense the same stimulus. This sensor is capable of generating only one alarm signal from the sensors employed in the design either independently or in combination. The sensor output signal is mathematically evaluated to determine when an alarm signal is warranted. The evaluation can be performed either at the detector or at the control unit. This detector has a single listing that establishes the primary function of the detector. (SIG-IDS)

EXHIBIT 3.18

Spot-Type Heat Detector. (Source: System Sensor Corp., St. Charles, IL)

EXHIBIT 3.19

Multi-Criteria Detector. (Source: Bosch Security Systems, Fairport, NY)

A.3.3.70.12 Multi-Criteria Detector. A multi-criteria detector is a detector that contains multiple sensing methods that respond to fire signature phenomena and utilizes mathematical evaluation principles to determine the collective status of the device and generates a single output. Typical examples of multi-criteria detectors are a combination of a heat detector with a smoke detector, or a combination rate-of-rise and fixed-temperature heat detector that evaluates both signals using an algorithm to generate an output such as pre-alarm or alarm. The evaluation can be performed either at the detector or at the control unit. Other examples are detectors that include sensor combinations that respond in a predictable manner to any combination of heat, smoke, carbon monoxide, or carbon dioxide.

Multi-criteria detectors contain more than one type of sensor (for example, heat, flame, smoke, or CO) to simultaneously detect multiple conditions and to predict the presence of a fire condition with improved accuracy and faster response. The signals are not available as individual outputs, as on a multi-sensor detector (see 3.3.70.13). Instead, the detector uses a proprietary software algorithm to evaluate the signals from the array of sensors and determine when to provide a single alarm signal output. Measuring the presence of more than one product of combustion gives the detector greater capability to reject nuisance alarm sources, such as dust, smoking, welding, steam, and aerosols. Multi-criteria detectors are listed as a single device. Exhibit 3.19 illustrates a multi-criteria detector.

Useful application examples of multi-criteria detectors are as follows:

- Very clean environments or spaces with sensitive contents where low threshold detection is desired — laboratories, telecommunications, IT rooms
- Rooms where nuisance sources are expected to expose the detector — kitchens, paint shops, health clubs or dwellings
- Areas where the environmental conditions vary — a room occupied during the day but void of activity in the evening. Multi-criteria detectors that compare a sensor signal to a reference chamber can account for variations in pressure and humidity that might impact detector performance.

See the commentary following A.3.3.70.13 for a comparison of combination detectors, multi-criteria detectors, and multi-sensor detectors.

3.3.70.13* Multi-Sensor Detector. A device that contains multiple sensors that separately respond to physical stimulus such as heat, smoke, or fire gases, or employs more than one sensor to sense the same stimulus. A device capable of generating multiple alarm signals from any one of the sensors employed in the design, independently or in combination. The sensor output signals are mathematically evaluated to determine when an alarm signal is warranted. The evaluation can be performed either at the detector or at the control unit. This device has listings for each sensing method employed. (SIG-IDS)

A.3.3.70.13 Multi-Sensor Detector. Typical examples of multi-sensor detectors are a combination of a heat detector with a smoke detector, or a combination rate-of-rise and fixed-temperature heat detector that evaluates both signals using an algorithm to generate an output such as pre-alarm or alarm. The evaluation can be performed either at the detector or at the control unit. Other examples are detectors that include sensor combinations that respond in a predictable manner to any combination of heat, smoke, carbon monoxide, or carbon dioxide.

Where a space or area contains varied fire hazards, a multi-sensor detector is an efficient way to apply more than one type of detector to optimize the response to a fire. Each type of sensor in the device carries a separate listing and provides an individual output that can be analyzed individually for an alarm condition. The detector might provide an alarm signal, or it might provide the sensor readings to the FACU for determination of an alarm condition.

Commentary Table 3.1 provides a comparison of combination, multi-criteria, and multi-sensor detectors.

COMMENTARY TABLE 3.1 *Comparison of Combination, Multi-Criteria, and Multi-Sensor Detectors*

Detector Type	Definition	Sensor Outputs	Alarm Condition	Alarm Signal	Listing
Combination detector	3.3.70.4	Normal/Alarm	Determined by sensor	Multiple for each detection method	Multiple for each detection method
Multi-criteria detector	3.3.70.12	Normal/Alarm or analog signal	Determined by mathematical evaluation of all sensor outputs	Single	Single
Multi-sensor detector	3.3.70.13	Normal/Alarm or analog signal	Determined by mathematical evaluation of each sensor output	Multiple for each sensor type	Multiple for each sensor type

3.3.70.14 Other Fire Detectors. Devices that detect a phenomenon other than heat, smoke, flame, or gases produced by a fire. (SIG-IDS)

3.3.70.15 Pneumatic Rate-of-Rise Tubing Heat Detector. A line-type detector comprising small-diameter tubing, usually copper, that is installed on the ceiling or high on the walls throughout the protected area. The tubing is terminated in a detector unit containing diaphragms and associated contacts set to actuate at a predetermined pressure. The system is sealed except for calibrated vents that compensate for normal changes in temperature. (SIG-IDS)

3.3.70.16 Projected Beam–Type Detector. A type of photoelectric light obscuration smoke detector wherein the beam spans the protected area. (SIG-IDS)

Projected beam detectors are often used in large open areas such as atria, convention halls, auditoriums, and gymnasiums and where a building or portion of a building has a high ceiling. Exhibit 3.20 illustrates a typical transmitter (red logo) and receiver (blue logo) version of a projected beam smoke detector. Exhibit 3.21 shows a projected beam smoke detector transmitter with a reflector.

3.3.70.17 Radiant Energy–Sensing Fire Detector. A device that detects radiant energy, such as ultraviolet, visible, or infrared, that is emitted as a product of combustion reaction and obeys the laws of optics. (SIG-IDS)

3.3.70.18* Rate Compensation Detector. A device that responds when the temperature of the air surrounding the device reaches a predetermined level, regardless of the rate-of-temperature rise. (SIG-IDS)

A.3.3.70.18 Rate Compensation Detector. A typical example of a rate compensation detector is a spot-type detector with a tubular casing of a metal that tends to expand lengthwise as it is heated and an associated contact mechanism that closes at a certain point in the elongation. A second metallic element inside the tube exerts an opposing force on the contacts, tending to hold them open. The forces are balanced in such a way that, on a slow rate-of-temperature rise, there is more time for heat to penetrate to the inner element, which inhibits contact closure until the total device has been heated to its rated temperature level. However, on a fast rate-of-temperature rise, there is not as much time for heat to penetrate to the inner element, which exerts less of an inhibiting effect so that contact closure is achieved when the total device has been heated to a lower temperature. This, in effect, compensates for thermal lag.

EXHIBIT 3.20

Point-to-Point Projected Beam Smoke Detector. (Source: Hochiki America Corp., Buena Park, CA)

EXHIBIT 3.21

Reflective Projected Beam Smoke Detector. (Source: Hochiki America Corp., Buena Park, CA)

Exhibit 3.22 illustrates typical rate compensation heat detectors. In addition to the benefit of having limited thermal lag, this type of detector can be used outdoors in challenging environments. It is a desired substitute initiating device when environmental conditions do not permit the use of a spot-type smoke detector, such as in exterior elevator lobbies where Elevator Phase I Emergency Recall Operation is provided.

3.3.70.19* Rate-of-Rise Detector. A device that responds when the temperature rises at a rate exceeding a predetermined value. (SIG-IDS)

A.3.3.70.19 Rate-of-Rise Detector. Typical examples of rate-of-rise detectors are as follows:

EXHIBIT 3.22

Rate Compensation Heat Detectors. (Source: Thermotech Inc., Ogden, UT; photo courtesy of Mammoth Fire Alarms, Inc., Lowell, MA)

(1) *Pneumatic Rate-of-Rise Tubing.* A line-type detector comprising small-diameter tubing, usually copper, that is installed on the ceiling or high on the walls throughout the protected area. The tubing is terminated in a detector unit that contains diaphragms and associated contacts set to actuate at a predetermined pressure. The system is sealed except for calibrated vents that compensate for normal changes in temperature.

(2) *Spot-Type Pneumatic Rate-of-Rise Detector.* A device consisting of an air chamber, a diaphragm, contacts, and a compensating vent in a single enclosure. The principle of operation is the same as that described for pneumatic rate-of-rise tubing.

(3) *Electrical Conductivity–Type Rate-of-Rise Detector.* A line-type or spot-type sensing element in which resistance changes due to a change in temperature. The rate of change of resistance is monitored by associated control equipment, and an alarm is initiated when the rate of temperature increase exceeds a preset value.

3.3.70.20 Smoke Detector. A device that detects visible or invisible particles of combustion. (SIG-IDS)

The definition of the term *smoke detector* uses the phrase "particles of combustion" to distinguish the effluent matter consisting of soot particles, gas molecules, vapor molecules, and ash particles from the heat and radiant energy liberated by the combustion reaction that is deemed energy. All matter flowing from the fire in the effluent plume is encompassed in the term *smoke*. The many types of smoke detectors are distinguished by the technology used to detect the matter in the smoke plume. For examples, see definitions of the terms *ionization smoke detection, photoelectric light obscuration smoke detection* and *photoelectric light-scattering smoke detection* in 3.3.276, and see Exhibit 3.23 for a *spot-type detector*.

EXHIBIT 3.23

Spot-Type Smoke Detector. (Source: System Sensor Corp., St. Charles, IL)

3.3.70.21 Spark/Ember Detector. A radiant energy–sensing fire detector that is designed to detect sparks or embers, or both. These devices are normally intended to operate in dark environments and in the infrared part of the spectrum. (SIG-IDS)

3.3.70.22 Spot-Type Detector. A device in which the detecting element is concentrated at a particular location. Typical examples are bimetallic detectors, fusible alloy detectors, certain pneumatic rate-of-rise detectors, certain smoke detectors, and thermoelectric detectors. (SIG-IDS)

3.3.71* Device (Class N). A supervised component of a life safety system that communicates with other components of life safety systems and that collects environmental data or performs specific input or output functions necessary to the operation of the life safety system. (SIG-PRO)

A.3.3.71 Device (Class N). Class N devices include components connected to a Class N network that monitor the environment (e.g., smoke, heat, contact closure, manual "in case of fire" pull) and/or provide some output(s) (e.g., dry contact, audible/visual alert/notification, addressable loudspeaker) that are required to provide the real-time functionality necessary for the protection of life and property. In this way, a component connected to the network used for noncritical functions (i.e., maintenance) can be differentiated and excluded from the monitoring for integrity requirements of Class N.

Also in this way, transport equipment (e.g., switches, routers, hubs, media converters) and other equipment (e.g., printers, storage devices) can be differentiated from the requirements applied to Class N devices if they do not provide life safety–specific environmental monitoring, inputs, or outputs for the life safety system. This is not to say that this equipment is not important to the overall operation of the system, just that this equipment is not considered a "device" in the context of Class N. Equipment that does not meet the definition of a device cannot be specifically supervised but rather generally supervised as they are part of the supervised pathways that service the Class N devices themselves.

3.3.72 Digital Alarm Communicator Receiver (DACR). A system component that accepts and displays signals from digital alarm communicator transmitters (DACTs) sent over a managed facilities-based voice network. (SIG-SSS)

Exhibit 3.24 illustrates a typical digital alarm communicator receiver (DACR).

3.3.73 Digital Alarm Communicator System (DACS). A system in which signals are transmitted from a digital alarm communicator transmitter (DACT) located at the protected premises through a managed facilities-based voice network to a digital alarm communicator receiver (DACR). (SIG-SSS)

3.3.74 Digital Alarm Communicator Transmitter (DACT). A system component at the protected premises to which initiating devices or groups of devices are connected. The DACT seizes the connected telephone line, dials a preselected number to connect to a DACR, and transmits signals indicating a status change of the initiating device. (SIG-SSS)

FAQ

What are the basic functional steps performed by a digital alarm communicator transmitter (DACT)?

The communications portion of a DACT functions much like a modem that allows a personal computer to connect to an Internet service provider. When a fire alarm system initiates a fire alarm, supervisory, or trouble signal, the DACT dials a preprogrammed telephone number. Once a DACR answers the incoming call, it provides a handshake signal to the DACT. The DACT then transmits digital information. On receipt of the information, the DACR transmits a "kiss off" signal to the DACT, which causes the DACT to disconnect and end the transmission. The DACR then interprets and displays the digital information as a fire alarm, supervisory, or trouble signal. The DACT, as shown in Exhibit 3.25, provides a commonly used means for transmitting fire alarm, supervisory, and trouble signals to a supervising station.

3.3.75 Digital Alarm Radio Receiver (DARR). A system component composed of two subcomponents: one that receives and decodes radio signals, the other that annunciates the decoded data. These two subcomponents can be coresident at the central station or separated by means of a data transmission channel. (SIG-SSS)

3.3.76 Digital Alarm Radio System (DARS). A system in which signals are transmitted from a digital alarm radio transmitter (DART) located at a protected premises through a radio channel to a digital alarm radio receiver (DARR). (SIG-SSS)

EXHIBIT 3.24

Digital Alarm Communicator Receiver (DACR). (Courtesy of Keltron)

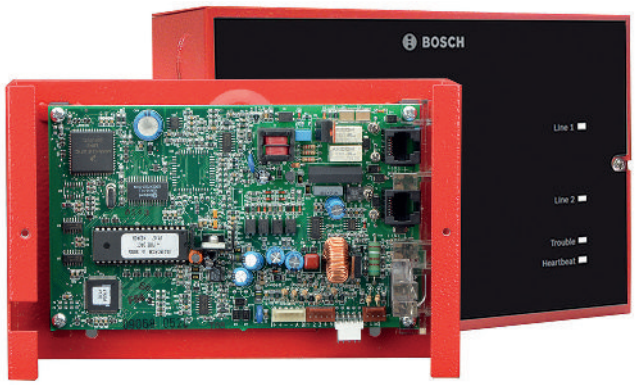

EXHIBIT 3.25

Digital Alarm Communicator Transmitter (DACT). (Courtesy of Bosch Security Systems)

Exhibit 3.26 illustrates a typical digital alarm radio system (DARS) arrangement.

3.3.77 Digital Alarm Radio Transmitter (DART). A system component that is connected to or an integral part of a digital alarm communicator transmitter (DACT) that is used to provide an alternate radio transmission channel. (SIG-SSS)

Exhibit 3.27 illustrates a typical digital alarm radio transmitter (DART).

EXHIBIT 3.26

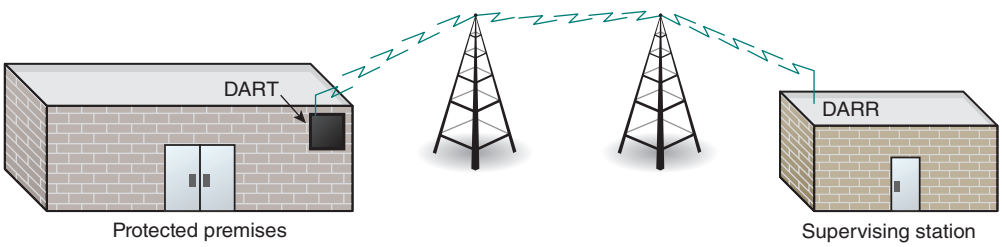

Digital Alarm Radio System (DARS).

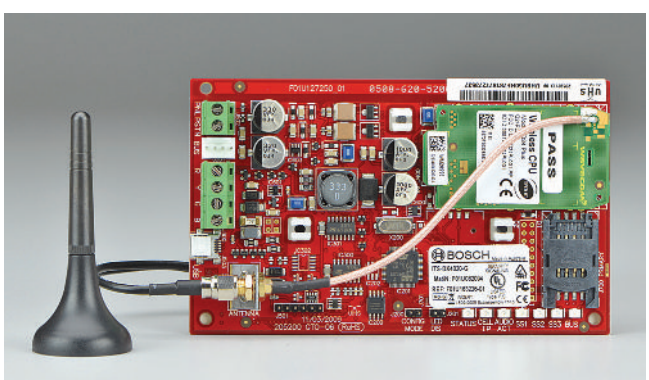

EXHIBIT 3.27

Digital Alarm Radio Transmitter (DART). (Source: Bosch Security Systems, Fairport, NY)

3.3.78 Display. The visible representation of output data, other than printed copy. (SIG-NAS)

3.3.79 Distributed Recipient Mass Notification System (DRMNS). See 3.3.90, Emergency Communications System.

3.3.80 Dormitory. A building or a space in a building in which group sleeping accommodations are provided for more than 16 persons who are not members of the same family in one room, or a series of closely associated rooms, under joint occupancy and single management, with or without meals, but without individual cooking facilities. [***101*, 2018**] (SIG-HOU)

3.3.81* Double Doorway. A single opening that has no intervening wall space or door trim separating the two doors. (SIG-IDS)

A.3.3.81 Double Doorway. Refer to Figure 17.7.5.6.5.3(A) for an illustration of detector location requirements for double doors.

3.3.82 Downlink. The radio signal from the base station transmitter to the portable public safety subscriber receiver. (SIG-ECS)

3.3.83 Dwelling Unit. One or more rooms arranged for complete, independent housekeeping purposes with space for eating, living, and sleeping; facilities for cooking; and provisions for sanitation. [**5000, 2018**] (SIG-HOU)

3.3.83.1 Multiple Dwelling Unit. A building containing three or more dwelling units. (SIG-HOU)

3.3.83.2 Single Dwelling Unit. A building consisting solely of one dwelling unit. (SIG-HOU)

3.3.84 Effective Masked Threshold. The minimum sound level at which the tone signal is audible in ambient noise. (SIG-NAS)

System Design Tip

Requirements in 18.4.7 permit designers to use an alternative method to the A-weighted signaling requirements for audible signaling. This method involves an evaluation of the background noise levels at each octave (or one-third octave) of the frequency spectrum. With this information, it might be possible to design an audible alarm signal that can be heard above specific background noise levels. Refer to 18.4.7 and related annex material and the commentary following A.18.4.7.2, as well as the definitions for the terms *octave band* and *one-third octave band* in 3.3.188 and 3.3.188.1.

The effective masked threshold is calculated as shown in Figure A.18.4.7.2 and its associated commentary. The perception of the loudness at one frequency band can be masked or hidden, if the next lower frequency band is significantly louder. In other words, a lower frequency can overpower a nearby higher frequency to some extent. The calculation of the effective masked threshold adjusts for this phenomenon of human hearing.

3.3.85 Electrical Conductivity Heat Detector. See 3.3.70, Detector.

N **3.3.86 Electromechanical Releasing Device.** Mechanical devices, including fusible links, electrically monitored for contact closure to initiate a signal to the FACU.

3.3.87* Ember. A particle of solid material that emits radiant energy due either to its temperature or the process of combustion on its surface. *(See also 3.3.282, Spark.)* (SIG-IDS)

A.3.3.87 Ember. Class A and Class D combustibles burn as embers under conditions where the flame typically associated with fire does not necessarily exist. This glowing combustion yields radiant emissions in parts of the radiant energy spectrum that are radically different from those parts affected by flaming combustion. Specialized detectors that are specifically designed to detect those emissions should be used in applications where this type of combustion is expected. In general, flame detectors are not intended for the detection of embers.

3.3.88 Emergency Command Center. See 3.3.92, Emergency Communications System — Emergency Command Center.

3.3.89 Emergency Communications Control Unit (ECCU). See 3.3.63, Control Unit.

3.3.90 Emergency Communications System. A system for the protection of life by indicating the existence of an emergency situation and communicating information necessary to facilitate an appropriate response and action. (SIG-ECS)

3.3.90.1 One-Way Emergency Communications System. One-way emergency communications systems are intended to broadcast information, in an emergency, to people in one or more specified indoor or outdoor areas. It is intended that emergency messages be conveyed either by audible, visual, or textual means, or any combination thereof. (SIG-ECS)

3.3.90.1.1 Distributed Recipient Mass Notification System (DRMNS). A distributed recipient mass notification system is a system meant to communicate directly to targeted individuals and groups that might not be in a contiguous area. (SIG-ECS)

Distributed recipient mass notification systems (DRMNSs) are normally one-way ECSs that communicate with a wide range of targeted individuals and groups. (Some DRMNSs may have features that allow confirmation that the message has been received by the recipient.) Methods of communication include a variety of means such as reverse 9-1-1 and e-mail. See A.24.7 for a detailed overview of these systems.

3.3.90.1.2 In-Building Fire Emergency Voice/Alarm Communications System. Dedicated manual or automatic equipment for originating and distributing voice instructions, as well as alert and evacuation signals pertaining to a fire emergency, to the occupants of a building. (SIG-ECS)

A building code or an authority having jurisdiction may require an in-building fire emergency voice/alarm communications system (also called "emergency voice/alarm communications system," "EVAC system," or "EVACS") when the fire safety plan for a building calls for a voice communication system or where partial evacuation of the building or relocation of the occupants to areas of refuge instead of total evacuation would be necessary. Large places of assembly, high-rise buildings, and large area industrial, commercial, or institutional facilities are typical applications for in-building fire EVACS. Exhibit 3.28 illustrates an in-building EVACS.

3.3.90.1.3 In-Building Mass Notification System. A system used to provide information and instructions to people in a building(s) or other space using intelligible voice communications and including visual signals, text, graphics, tactile, or other communication methods. (SIG-ECS)

An in-building MNS is similar in concept to a fire alarm system that includes an in-building fire EVACS. The only purpose of an in-building fire EVACS is for fire emergencies; the in-building MNS has a broader set of potential applications and is likely to be subject to a more complex set of potential design conditions and operation scenarios, which could also include fire emergencies.

3.3.90.1.4 Wide-Area Mass Notification System. Wide-area mass notification systems are generally installed to provide real-time information to outdoor areas and could have the capability to communicate with other notification systems provided for a campus, military base, municipality, or similar single or multiple contiguous areas. (SIG-ECS)

EXHIBIT 3.28

In-Building Fire Emergency Voice/Alarm Communications System. (Source: Johnson Controls, Westminster, MA)

Wide-area MNSs are one-way ECSs that are intended to communicate to outdoor areas such as those in college or military campuses. The primary means of communication is via high power loudspeaker arrays. See A.24.6 for additional explanation.

3.3.90.2 Two-Way Emergency Communications System. Two-way emergency communications systems are divided into two categories, those systems that are anticipated to be used by building occupants and those systems that are to be used by fire fighters, police, and other emergency services personnel. Two-way emergency communications systems are used to both exchange information and to communicate information such as, but not limited to, instructions, acknowledgement of receipt of messages, condition of local environment, and condition of persons, and to give assurance that help is on the way. (SIG-ECS)

Note that the in-building fire EVACS illustrated in Exhibit 3.28, in the second module row, provides two-way telephone communications equipment (i.e., telephone handset) and a system microphone for one-way fire EVAC.

3.3.91 Emergency Communications Systems — Combination. Various emergency communications systems such as fire alarm, mass notification, fire fighter communications, area of refuge communications, elevator communications, or others that can be served through a single control system or through an interconnection of several control systems. (SIG-ECS)

3.3.92* Emergency Communications System — Emergency Command Center. The room(s) or area(s) staffed during any emergency event by assigned emergency management staff. The room or area contains system communications and control equipment serving one or more buildings where responsible authorities receive information from premises sources or systems or from (higher level) regional or national sources or systems and then disseminate appropriate information to individuals, a building, multiple buildings, outside campus areas, or a combination of these in accordance with the emergency response plan established for the premises. The room or area contains the controls and indicators from which the ECS systems located in the room or area can be manually controlled as required by the emergency response plan and the emergency management coordinator. (SIG-ECS)

An ECCU for the ECS is located in a centralized facility to enable the receipt and control of emergency information. The ECCU facilitates the automatic or manual distribution of signals and messages to selectable locations based on information from responsible authorities. Also refer to the definition of the term *emergency communications control unit (ECCU)* in 3.3.89 and associated commentary following 3.3.63.2.

A.3.3.92 Emergency Communications System — Emergency Command Center. An emergency command center can also include the mass notification system control.

3.3.93* Emergency Control Function Interface Device. A listed fire alarm or signaling system component that directly interfaces with the system that operates the emergency control function. (SIG-PRO)

An emergency control function interface device is used to control safety functions that enhance life safety and property protection during a fire or other emergency. The control unit may operate emergency (fire safety) control functions manually or automatically. Those functions might include unlocking doors, starting fans, recalling elevators, or actuating a fire suppression system. Exhibit 3.29 shows an example of three control relays mounted next to an elevator controller.

EXHIBIT 3.29

Control Relays for Elevator Phase I Emergency Recall Operation Within 3 ft (1 m) of Elevator Controller.

A.3.3.93 Emergency Control Function Interface Device. The emergency control function interface device is a listed relay or other listed appliance that is part of the fire alarm system. An example of an emergency control function interface device is the fire alarm control relay that removes power to a fan control unit.

3.3.94* Emergency Control Functions. Building, fire, and emergency control elements or systems that are initiated by the fire alarm or signaling system and either increase the level of life safety for occupants or control the spread of the harmful effects of fire or other dangerous products. (SIG-PRO)

The general term *emergency control function* is used instead of *fire safety function* to reflect the broader range of potential life safety control applications. Emergency control functions include shutdown of air-handling systems, elevator recall operation, closure of HVAC dampers, actuation of fire suppression systems, and release of doors to enhance life safety and property protection during a fire. Specific functions are described in more detail in Section 23.15 and Chapter 21.

A.3.3.94 Emergency Control Functions. Emergency control functions are meant to be observed functions, not equipment or devices. Examples of emergency control functions are fan control (operation or shutdown), smoke damper operation, elevator recall, elevator power shutdown, door holder release, shutter release, door unlocking, activation of exit marking devices, and so forth. Fans, elevators, smoke dampers, door holders, shutters, locked doors, or exit marking devices themselves are not emergency control functions.

N **3.3.95* Emergency Response Agency (ERA).** Organizations providing law enforcement, emergency medical, fire, rescue, communications, and related support services. [**1221,** 2019] (SIG-SSS)

N **A.3.3.95 Emergency Response Agency (ERA).** An ERA includes any public, governmental, private, industrial, or military organization that engages in the operations specified in the definition. [**1221:**A.3.3.44]

This new definition is from NFPA 720, *Standard for the Installation of Carbon Monoxide (CO) Detection and Warning Equipment*. These requirements and definitions are now incorporated into *NFPA 72*. The term is extracted from NFPA 1221.

3.3.96* Emergency Response Facility (ERF). A structure or a portion of a structure that houses emergency response agency equipment or personnel for response to alarms. [**1221,** 2019] (SIG-PRS)

A.3.3.96 Emergency Response Facility (ERF). Examples of ERFs include a fire station, a police station, an ambulance station, a rescue station, a ranger station, and similar facilities. [**1221:**A.3.3.45]

3.3.97 Emergency Response Plan. A documented set of actions to address the planning for, management of, and response to natural, technological, and man-made disasters and other emergencies. (SIG-ECS)

A typical emergency response plan must first identify the goals and objectives of the organization developing the plan. It should include as a minimum the following elements:

- Evacuation plan
- Severe weather/tornado sheltering plan
- Lockdown plan
- Lockout plan
- Shelter-in-place plan
- Medical emergency plan
- Fire emergency plan

The risk analysis and the emergency response plan will be the basis for the MNS design.

3.3.98* Endpoint (Class N). The end of a pathway where a single addressable device or a control unit is connected. (SIG-PRO)

A.3.3.98 Endpoint (Class N). An endpoint device originates and/or terminates a communication stream and does not forward it to other devices.

An FACU, ACU, ECCU endpoint originates and/or terminates a communication stream with autonomy. If data is sent to or received from other locations, that communications stream forms a new path. The new path could even employ a different communications protocol and, where permitted, have a different pathway class designation as defined in Section 12.3.

The exception in 12.3.6(1) shows Class N communication paths do not require redundant paths when connected to a single endpoint device. However, a connection to an FACU, ACU, or ECCU must be redundant even when those elements are an endpoint on a Class N communication path, with the excepted allowance of 20 ft (6.1 m) inside a raceway or enclosure defined in 12.6.9.

N **3.3.99* Energy Storage Systems (ESS).** Equipment that receives electrical energy and then provides a means to store that energy in some form for later use in order to supply electrical energy when needed. The energy storage system utilizes the technologies defined in 3.3.99.2 through 3.3.99.4.

N **A.3.3.99 Energy Storage Systems.** Electrochemical energy storage systems include uninterruptable power supplies (UPS).

N ***3.3.99.1 Chemical Energy Storage System.*** Consists of hydrogen storage, the hydrogen generator to supply the hydrogen for storage, and a fuel cell power system to provide electric energy upon demand.

N ***3.3.99.2 Electrochemical Energy Storage System.*** Consists of a secondary battery, electrochemical capacitor, flow battery, or hybrid battery-capacitor system that stores energy and any associated controls or devices that can provide electric energy upon demand.

N ***3.3.99.3 Mechanical Energy Storage System.*** Consists of a mechanical means to store energy such as through compressed air, pumped water or fly wheel technologies, and associated controls and systems, which can be used to run an electric generator to provide electric energy upon demand.

N ***3.3.99.4 Thermal Energy Storage System.*** Consists of a system that uses heated fluids such as air as a means to store energy along with associated controls and systems, which can be used to run an electric generator to provide electrical energy upon demand.

3.3.100* Evacuation. The withdrawal of occupants from a building. (SIG-PRO)

A.3.3.100 Evacuation. Evacuation does not include the relocation of occupants within a building.

3.3.101 Evacuation Signal. See 3.3.263, Signal.

3.3.102 Executive Software. See 3.3.279, Software.

3.3.103 Exit Marking Audible Notification Appliance. See 3.3.182, Notification Appliance.

N **3.3.104 FACP.** Fire Alarm Control Panel. See 3.3.108, Fire Alarm Control Unit (FACU).

3.3.105 False Alarm. See 3.3.314, Unwanted Alarm.

3.3.106 Field of View. The solid cone that extends out from the detector within which the effective sensitivity of the detector is at least 50 percent of its on-axis, listed, or approved sensitivity. (SIG-IDS)

The term *field of view* applies to radiant energy–sensing fire detectors. The field of view defines the line-of-sight area of coverage in which the detector can view a spark, ember, or flaming fire. Unintended sources in a field of view, such as welding arcs or sunlight, can cause nuisance alarms.

3.3.107 Fire Alarm Control Interface (FACI). See 3.3.146, Interface.

3.3.108* Fire Alarm Control Unit (FACU). A component of the fire alarm system, provided with primary and secondary power sources, which receives signals from initiating devices or other fire alarm control units, and processes these signals to determine part or all of the required fire alarm system output function(s). (SIG-PRO)

A.3.3.108 Fire Alarm Control Unit (FACU). In addition to the functions identified in the definition, a fire alarm control unit might have an integral operator interface, supply power to detection devices, notification appliances, transponder(s), or off-premises transmitter(s) or any combination of these. The control unit might also provide transfer of condition to relay or devices connected to the control unit. There can be multiple fire alarm control units in a fire alarm system.

An FACU is a control unit (see 3.3.63) that is used as part of a fire alarm system. It can also serve as a master FACU for a building (see 3.3.108.1). Depending on the design of the system, an application may use multiple FACUs with different functions. Such system components are also called subpanels or satellite

EXHIBIT 3.30

Fire Alarm Control Unit. (Source: Mircom Technologies Ltd., Niagara Falls, NY)

EXHIBIT 3.31

Fire Alarm Control Unit with Integral Communications System. (Source: Johnson Controls, Westminster, MA)

System Design Tip

control units. Control units may receive signals from initiating devices or other FACUs and process the signals to determine all or part of the required output for the fire alarm system.

An FACU can also have different technologies, such as conventional hardwired zones, or use addressable and analog-type devices. A control unit can also include power extender units because it controls notification appliance circuits (NACs) as part of the fire alarm system. Exhibit 3.30 illustrates a typical FACU, and Exhibit 3.31 shows an FACU with an integral communications system.

3.3.108.1 Master Fire Alarm Control Unit. A fire alarm control unit that serves the protected premises or portion of the protected premises as a local fire alarm control unit and accepts inputs from other fire alarm control units. (SIG-PRO)

Where more than one FACU is installed in a facility, one of the control units may be designated as the master control unit to monitor alarm, supervisory, and trouble signals from other control units installed as part of the overall fire alarm system.

3.3.108.2 Protected Premises (Local) Control Unit. A fire alarm control unit that serves the protected premises or a portion of the protected premises. (SIG-PRO)

3.3.108.2.1* Dedicated Function Fire Alarm Control Unit. A protected premises fire alarm control unit that is intended to operate specifically identified emergency control function(s). (SIG-PRO)

Many functions in a building that are required by other codes, standards, or authorities having jurisdiction need to be controlled or monitored by a fire alarm system, such as controlling and monitoring the operation of a fire suppression system or elevator recall operation. These usually require the use of an FACU to accomplish those functions. When this is the case, and a building fire alarm system (see 3.3.111.4.1) is not otherwise required or installed, the installation of an FACU will be needed. Where FACUs are installed for a specific purpose, they are designated as dedicated function FACUs. The installation of a dedicated function FACU does not trigger a requirement to provide any features (fire alarm system components, devices, and functions, including notification appliances) beyond those necessary to accomplish the tasks assigned to the control unit. See 1.2.4.

A.3.3.108.2.1 Dedicated Function Fire Alarm Control Unit. A dedicated function fire alarm control unit could serve more than one emergency control function, for example a dedicated function fire alarm control unit could serve as a single control unit for sprinkler system monitoring and elevator recall. In that case, the control unit should be labeled as follows:

Sprinkler Waterflow AND Elevator Recall Control and Supervisory Control Unit

3.3.108.2.2 Releasing Service Fire Alarm Control Unit. A protected premises fire alarm control unit specifically listed for releasing service that is part of a fire suppression system and which provides control outputs to release a fire suppression agent based on either automatic or manual input. (SIG-PRO)

FAQ What is a releasing service fire alarm control unit?

A releasing service FACU is specifically listed to be used for control of a fire suppression system or other fire protection system and is an example of a type of dedicated function FACU. The designer should review the listing and manufacturer's installation instructions for use and application of the releasing service FACU.

3.3.109 Fire Alarm/Evacuation Signal Tone Generator. A device that produces a fire alarm/evacuation tone upon command. (SIG-PRO)

3.3.110 Fire Alarm Signal. See 3.3.263, Signal.

3.3.111 Fire Alarm System. A system or portion of a combination system that consists of components and circuits arranged to monitor and annunciate the status of fire alarm or supervisory signal-initiating devices and to initiate the appropriate response to those signals. (SIG-FUN)

The definition of *fire alarm system* includes fire alarm systems whose sole purpose is to provide a specific function or functions, such as sprinkler supervisory service. These systems fall under the defined term *dedicated function fire alarm system* (see 3.3.111.4.2).

3.3.111.1* Combination System. A fire alarm system in which components are used, in whole or in part, in common with a non-fire signaling system. (SIG-PRO)

A.3.3.111.1 Combination System. Examples of non-fire systems are security, card access control, closed circuit television, sound reinforcement, background music, paging, sound masking, building automation, time, and attendance.

Subsection 23.8.4 addresses combination systems. Exhibit 3.32 illustrates a typical combination system.

3.3.111.2 Household Fire Alarm System. A system of devices that uses a fire alarm control unit to produce an alarm signal in the household for the purpose of notifying the occupants of the presence of a fire so that they will evacuate the premises. (SIG-HOU)

3.3.111.3 Municipal Fire Alarm System. A public emergency alarm reporting system. (SIG-PRS)

3.3.111.4* Protected Premises (Local) Fire Alarm System. A fire alarm system located at the protected premises. (SIG-PRO)

EXHIBIT 3.32

Combination Burglary and Fire Alarm System Control Unit and Associated System Components. (Source: Honeywell International Inc., Melville, NY)

A.3.3.111.4 Protected Premises (Local) Fire Alarm System. A protected premises fire alarm system is any fire alarm system located at the protected premises. It can include any of the functions identified in Section 23.3. Where signals are transmitted to a communications center or supervising station, the protected premises fire alarm system also falls under the definition of one of the following systems: central station service alarm system, remote supervising station alarm system, proprietary supervising station alarm system, or auxiliary alarm system. The requirements that pertain to these systems apply in addition to the requirements for the protected premises fire alarm systems.

A protected premises (local) fire alarm system includes any fire alarm system at the protected premises, whether or not it sounds a local alarm.

3.3.111.4.1 Building Fire Alarm System. A protected premises fire alarm system that includes any of the features identified in 23.3.3.1 and that serves the general fire alarm needs of a building or buildings and provides notification. (SIG-PRO)

3.3.111.4.2 Dedicated Function Fire Alarm System. A protected premises fire alarm system installed specifically to perform emergency control function(s) where a building fire alarm system is not required. (SIG-PRO)

3.3.111.4.3 Releasing Fire Alarm System. A protected premises fire alarm system that is part of a fire suppression system and/or that provides control inputs to a fire suppression system related to the fire suppression system's sequence of operations and outputs for other signaling and notification. (SIG-PRO)

3.3.112* Fire Command Center. The principal attended or unattended room or area where the status of the detection, alarm communications, control systems, and other emergency systems is displayed and from which the system(s) can be manually controlled. (SIG-ECS)

Where an in-building fire EVACS is provided, the applicable building code may require a fire command center. The fire command center houses the fire alarm system controls and may include controls for other building systems such as security, HVAC, and elevator and lighting systems. During an emergency, the fire command center serves as the central point for the command of emergency operations and communications. The fire command center is generally located in a separate room or other area approved by the authority having jurisdiction. The location must allow the incident commander to assess changing conditions during an emergency and communicate with the building occupants and emergency responders. The applicable building code usually provides details on construction of the fire command center.

In the application of an in-building fire EVACS, the requirements in Section 24.4 apply even though a *fire command center* is not used. The requirements for two-way, in-building wired ECSs in Section 24.8 use the terms *control equipment, control location*, and *control center* in place of *fire command center*.

A.3.3.112 Fire Command Center. The fire command center should contain the following features as applicable to the specific facility:

(1) Emergency voice/alarm communications system unit
(2) Fire department communications unit
(3) Fire detection and alarm system annunciator unit
(4) Annunciator unit visually indicating the location of the elevators and whether they are operational
(5) Status indicators and controls for air-handling systems
(6) The required fire-fighter's control panel for smoke control systems installed in the building
(7) Controls for unlocking stairway doors simultaneously

(8) Sprinkler valve and waterflow detector display panels
(9) Emergency and standby power status indicators
(10) Telephone for fire department use with controlled access to the public telephone system
(11) Fire pump status indicators
(12) Schematic building plans indicating the typical floor plan and detailing the building core, means of egress, fire protection systems, fire-fighting equipment, and fire department access
(13) Worktable
(14) Generator supervision devices, manual start, and transfer features
(15) Public address system
(16) Other emergency systems identified in emergency response plan

3.3.113 Fire Extinguisher Electronic Monitoring Device. A device connected to a control unit that monitors the fire extinguisher in accordance with the requirements of NFPA 10. (SIG-IDS)

3.3.114 Fire Warden. A building staff member or a tenant trained to perform assigned duties in the event of a fire emergency. (SIG-PRO)

Depending on the design of the fire alarm system and the site-specific fire safety plan for a facility, fire wardens may be used to initiate or facilitate evacuation or relocation during a fire. Fire wardens are typically used in large-area buildings with high occupant loads where direction may be required to prompt building occupants to follow the established emergency procedures. Fire wardens may also be used to sweep through their assigned areas to ensure that all occupants heard and responded properly to an alarm.

3.3.115 Fire Warning Equipment. Any detector, alarm, device, or material related to single- and multiple-station alarms or household fire alarm systems. (SIG-HOU)

Fire warning equipment includes all the equipment addressed in Chapter 29. Single- and multiple-station alarms and household fire alarm systems are the three subcategories of fire warning equipment. The requirements in Chapter 29 are specific to these terms. Refer to the related definitions of the terms *household fire alarm system* in 3.3.111.2, *single-station alarm* in 3.3.269, and *multiple-station alarm device* in 3.3.171.

3.3.116 Fire–Gas Detector. See 3.3.70, Detector.

3.3.117 Fixed-Temperature Detector. See 3.3.70, Detector.

3.3.118 Flame. A body or stream of gaseous material involved in the combustion process and emitting radiant energy at specific wavelength bands determined by the combustion chemistry of the fuel. In most cases, some portion of the emitted radiant energy is visible to the human eye. (SIG-IDS)

3.3.119 Flame Detector. See 3.3.70, Detector.

3.3.120 Flame Detector Sensitivity. The distance along the optical axis of the detector at which the detector can detect a fire of specified size and fuel within a given time frame. (SIG-IDS)

3.3.121 Frequency. Minimum and maximum time between events. (SIG-TMS)

3.3.121.1 Weekly Frequency. Fifty-two times per year, once per calendar week.

3.3.121.2 Monthly Frequency. Twelve times per year, once per calendar month.

3.3.121.3 Quarterly Frequency. Four times per year with a minimum of 2 months, maximum of 4 months.

3.3.121.4 Semiannual Frequency. Twice per year with a minimum of 4 months, maximum of 8 months.

3.3.121.5 Annual Frequency. Once per year with a minimum of 9 months, maximum 15 months.

3.3.122 Gateway. A device that is used in the transmission of serial data (digital or analog) from the fire alarm control unit to other building system control units, equipment, or networks and/or from other building system control units to the fire alarm control unit. (SIG-PRO)

3.3.123 Girder. See 3.3.40, Ceiling Surfaces.

3.3.124 Guard's Tour Reporting Station. A device that is manually or automatically initiated to indicate the route being followed and the timing of a guard's tour. (SIG-IDS)

3.3.125 Guard's Tour Supervisory Signal. See 3.3.263, Signal.

3.3.126 Guest Room. An accommodation combining living, sleeping, sanitary, and storage facilities within a compartment. [***101***, 2018] (SIG-HOU)

3.3.127 Guest Suite. An accommodation with two or more contiguous rooms comprising a compartment, with or without doors between such rooms, that provides living, sleeping, sanitary, and storage facilities. [***101***, 2018] (SIG-HOU)

3.3.128* Hearing Loss. A full or partial decrease in the ability to detect or comprehend sounds. (SIG-HOU)

A.3.3.128 Hearing Loss. The severity of hearing loss is measured by the degree of loudness, as measured in decibels, a sound must attain before being detected by an individual. Hearing loss can be ranked as mild, moderate, severe, or profound. It is quite common for someone to have more than one degree of hearing loss (e.g., mild sloping to severe). The following list shows the rankings and their corresponding decibel ranges:

(1) Mild:
  (a) For adults: between 25 and 40 dB
  (b) For children: between 15 and 40 dB
(2) Moderate: between 41 and 55 dB
(3) Moderately severe: between 56 and 70 dB
(4) Severe: between 71 and 90 dB
(5) Profound: 90 dB or greater

NIOSH defines material hearing impairment as an average of the hearing threshold levels for both ears that exceeds 25 dB at 1000, 2000, 3000, and 4000 Hz.

The American Medical Association indicates that a person has suffered material impairment when testing reveals a 25 dB average hearing loss from audiometric zero at 500, 1000, 2000, and 3000 Hz. OSHA has recognized that this is the lowest level of hearing loss that constitutes any material hearing impairment.

The term *hearing loss* is used in 29.5.10, and the requirements of 29.5.10.1 and 29.5.10.2 are specified in terms of "mild to severe" hearing loss and "moderately severe to profound" hearing loss.

3.3.128.1 Profound Hearing Loss. A hearing threshold of greater than 90 dB.

3.3.129 Heat Alarm. A single- or multiple-station alarm responsive to heat. (SIG-HOU)

3.3.129.1 Mechanically Powered, Single-Station Heat Alarm. A single-station heat alarm employing a mechanical power source. (SIG-HOU)

3.3.130 Heat Detector. See 3.3.70, Detector.

3.3.131 High Power Loudspeaker Array (HPLA). High power loudspeaker arrays provide capability for voice and tone communications to large outdoor areas. (SIG-ECS)

High power loudspeaker arrays are one type of outdoor loudspeaker system used for wide-area MNS. Newer loudspeakers used in outside environments offer intelligibility over an extended area. See Exhibit 3.33.

N **3.3.132 High Volume Low Speed (HVLS) Fan.** A ceiling fan that is approximately 6 ft (1.8 m) to 24 ft (7.3 m) in diameter with a rotational speed of approximately 30 to 70 revolutions per minute. **[13,** 2016] (SIG-PRO)

3.3.133 Hotel. A building or groups of buildings under the same management in which there are sleeping accommodations for more than 16 persons and primarily used by transients for lodging with or without meals. [***101*,** 2018] (SIG-HOU)

3.3.134 Household Fire Alarm System. See 3.3.111, Fire Alarm System.

3.3.135 Hunt Group. A group of associated telephone lines within which an incoming call is automatically routed to an idle (not busy) telephone line for completion. (SIG-SSS)

3.3.136* Identified (as applied to equipment). Recognizable as suitable for the specific purpose, function, use, environment, application, and so forth, where described in a particular *Code* requirement. [**70:**100] (SIG-PRS)

A.3.3.136 Identified (as applied to equipment). Some examples of ways to determine suitability of equipment for a specific purpose, environment, or application include investigations by a qualified testing laboratory (listing and labeling), an inspection agency, or other organizations concerned with product evaluation. [**70:**100, Informational Note]

N **3.3.137* Immediately (as used in Chapter 26).** Performed without unreasonable delay. (SIG-SSS)

N **A.3.3.137 Immediately (as used in Chapter 26).** Actions that are performed "immediately" should be performed within a maximum of 90 seconds from receipt of a signal.

The term *immediately (as used in Chapter 26)* has been added and its use is limited to where it is in the requirements of Chapter 26.

3.3.138* Impairment. An abnormal condition, during either a planned or emergency event, where a system, component, or function is inoperable. (SIG-FUN)

In the 2016 edition of the Code, the term *impairment* was consolidated under a single definition of an abnormal condition, whether it is a planned or emergency event. Section 10.21 expands on the needed actions when a system is impaired beyond a certain time and when required monitoring has been terminated.

A.3.3.138 Impairment. An impairment is a system component or function that is not working properly, which can result in the system or unit not functioning when required. This might be due to an intentional act, such as closing a valve or disabling an initiating device. The impairment also might be caused by a deficiency in a piece of equipment or subsystem. An example of emergency impairment is physical damage to a control unit or wiring. Examples of a planned impairment include the addition of new devices or appliances or the reprogramming of system software.

EXHIBIT 3.33

Outdoor Loudspeaker Array Adjustable from 90° to 360°. (Source: Ultra Electronics-USSI HyperSpike®, Columbia City, IN)

3.3.139* In Writing. A form of correspondence formatted as a letter or document that can be verified upon request. (SIG-FUN)

Δ **A.3.3.139 In Writing**. The definition of *in writing* should be applied to any documentation mandated by this Code whereby a statement or notification, or both, is required to be provided by the sender to a separate and distinct entity or to multiple entities, such as between an inspection, testing, and maintenance service provider and a building owner or between a supervising/central station provider and the authority having jurisdiction.

Such correspondence should be authorized and recognized by the sender as an official representation of their organization and clearly identifiable from the recipient's perspective as having been authorized by the sender. Examples of correspondence made *in writing* could include, but not be limited to, hard copy or digital notification that includes company letterhead or other type of company designation, authorized signatory or signatories either in digital form or on hard copy, or in an email signature block, or any combination thereof. Examples where such correspondence would be required could include, but not be limited to, test plans, inspection and testing reports, notification of deficiencies/corrections, change of supervising/central station providers, notification of recalled equipment, or suspected low audibility levels for alarm signaling.

The definition of *in writing* should not be applied to text messages, voice mails, notations on scratch paper, or any similar means of notification that fail to reflect the verifiable and authenticated nature of correspondence that is submitted *in writing*, as that term is defined by this Code.

3.3.140 In-Building Mass Notification System. See 3.3.90, Emergency Communications System.

3.3.141 Initiating Device. A system component that originates transmission of a change-of-state condition, such as in a smoke detector, manual fire alarm box, or supervisory switch. (SIG-IDS)

3.3.141.1 Analog Initiating Device (Sensor). An initiating device that transmits a signal indicating varying degrees of condition as contrasted with a conventional initiating device, which can only indicate an on–off condition. (SIG-IDS)

FAQ What do analog initiating devices measure and transmit?

Analog initiating devices measure and transmit to the FACU a range of values of smoke density, temperature variation, water level, water pressure changes, and other variables. Typically, the control unit software determines the set points for initiation of an alarm, supervisory, or trouble signal. By storing reported values over time, some smoke detector technology uses analog signal processing to provide a warning signal to the owner when a detector is dirty or when it drifts outside its listed sensitivity range. Some analog technology can be used for smoke detector sensitivity testing per 14.4.4.3.

3.3.141.2 Automatic Extinguishing System Supervisory Device. A device that responds to abnormal conditions that could affect the proper operation of an automatic sprinkler system or other fire extinguishing system(s) or suppression system(s), including, but not limited to, control valves, pressure levels, liquid agent levels and temperatures, pump power and running, engine temperature and overspeed, and room temperature. (SIG-IDS)

When an abnormal condition is detected, a supervisory signal is activated to warn the owner or attendant that the extinguishing system requires attention. Supervisory signals are distinct from alarm

signals or trouble signals. Automatic extinguishing system supervisory devices are a subcategory of those devices that fall under the general definition of the term *supervisory signal initiating device* (see 3.3.141.5).

3.3.141.3 Nonrestorable Initiating Device. A device in which the sensing element is designed to be destroyed in the process of operation. (SIG-IDS)

One example of a nonrestorable initiating device is the fixed-temperature heat detector (see Exhibit 3.16), which uses a fusible element that melts when subjected to heat. When the element melts, the electrical contacts are shorted together and the alarm signal is activated.

3.3.141.4 Restorable Initiating Device. A device in which the sensing element is not ordinarily destroyed in the process of operation, whose restoration can be manual or automatic. (SIG-IDS)

3.3.141.5 Supervisory Signal Initiating Device. An initiating device such as a valve supervisory switch, water level indicator, or low air pressure switch on a dry pipe sprinkler system in which the change of state signals an off-normal condition and its restoration to normal of a fire protection or life safety system; or a need for action in connection with guard tours, fire suppression systems or equipment, or maintenance features of related systems. (SIG-IDS)

3.3.142 Initiating Device Circuit. A circuit to which automatic or manual initiating devices are connected where the signal received does not identify the individual device operated. (SIG-PRO)

Conventional (nonaddressable/nonanalog) initiating devices are typically detectors that use a switch contact or a solid-state switch to short both sides of the initiating device circuit together. By doing so, the initiating device causes a step-function increase in current flowing through the circuit. The FACU interprets the increase in current as an "alarm" signal from one of the initiating devices. Since any one of the initiating devices can cause the incremental current flow, and no other initiating devices downstream of the activated device can subsequently activate because both sides of the circuit have been shorted by the first responding device, only one signal can be obtained. Sometimes initiating device circuits are called *zones*, and the activated device puts the entire zone into the alarm state.

3.3.143 Inspection Personnel. See 3.3.200, Personnel.

3.3.144 Intelligibility. The quality or condition of being intelligible. (SIG-NAS)

The term *intelligibility* relates to voice communications used in ECSs. If voice messages to occupants in buildings and other locations cannot be understood, the message system will have little, if any, benefit. Intelligible voice communications have become even more important with the increased use of ECSs. Annex D, Speech Intelligibility, provides guidance on system design with emphasis on testing.

3.3.145* Intelligible. Capable of being understood; comprehensible; clear. (SIG-NAS)

A.3.3.145 Intelligible. The term *intelligible* is intended to address only the communications channel and the acoustic environment as shown in Figure A.3.3.145. Intelligibility assumes that the talker or recorded voice message is in a language and using words known to the listener. It also assumes that the listener has normal hearing.

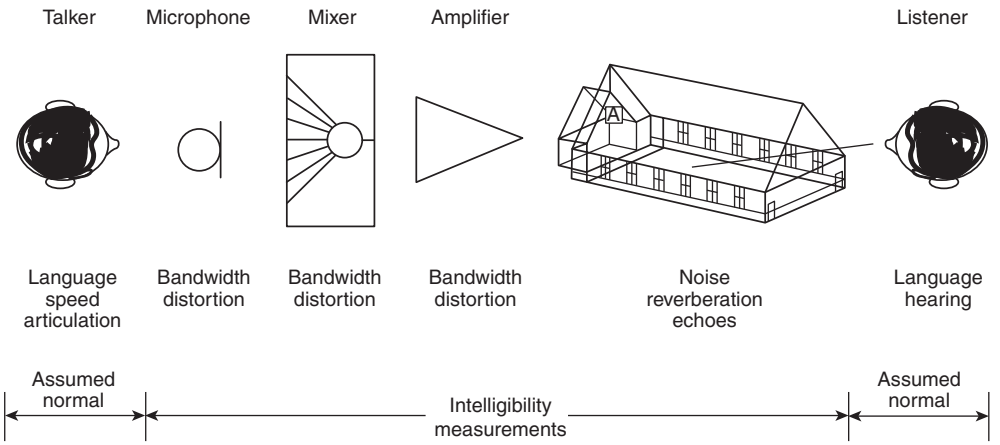

FIGURE A.3.3.145 *Voice Signal Path. (Source: K. Jacob, Bose® Professional Systems)*

The concepts of *intelligibility* and *intelligible* apply to messages that might be only one word but that more often comprise sentences with multiple words. A sentence can usually be understood even when not all the words are intelligible to the listener. The methods discussed in Annex D for evaluating the intelligibility of a system account for this phenomenon.

3.3.146 Interface.

3.3.146.1 Circuit Interface. A circuit component that interfaces initiating devices or control circuits, or both; notification appliances or circuits, or both; system control outputs; and other signaling line circuits to a signaling line circuit. (SIG-PRO)

3.3.146.1.1* Emergency Control Function Interface. The interface between the fire alarm system emergency control function interface device and the component controlling the emergency control function. (SIG-PRO)

A.3.3.146.1.1 Emergency Control Function Interface. See Figure A.3.3.146.1.1.

3.3.146.1.2 Signaling Line Circuit Interface. A system component that connects a signaling line circuit to any combination of initiating devices, initiating device circuits, notification appliances, notification appliance circuits, system control outputs, and other signaling line circuits. (SIG-PRO)

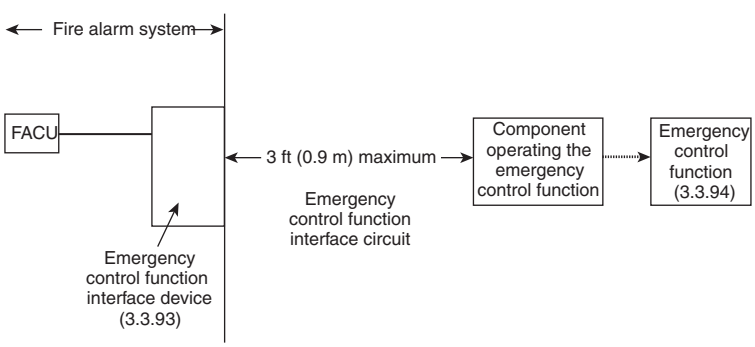

FIGURE A.3.3.146.1.1 *Emergency Control Function Interface.*

A signaling line circuit interface (SLCI) (see Exhibit 3.34) is a means of interconnecting signaling line circuits (SLCs) (addressable circuits) with nonaddressable or conventional initiating device circuits or control devices. Other industry terms used to describe an SLCI are *monitor module, zone addressable module,* and *transponder*. An SLCI provides a means of translating the signal from a conventional circuit to one that can be understood by an addressable system. In essence, the SLCI provides an "address" for a nonaddressable circuit, device, or appliance.

3.3.146.2* Fire Alarm Control Interface. The fire alarm control interface coordinates signals to and from the fire alarm system and other systems. (SIG-ECS)

A.3.3.146.2 Fire Alarm Control Interface. Some mass notification systems' autonomous control units (ACUs) might not be listed to UL 864 for fire alarm service. Any component that is connected to the fire alarm system must be connected through a listed interface that will protect the functions of other systems should one system experience a failure. This can be through isolation modules, control relays, or other approved means that are listed for the intended use. As an example, failure of a stand-alone ACU should not affect any function of the FACU.

3.3.147 Ionization Smoke Detection. See 3.3.276, Smoke Detection.

3.3.148 Leg Facility. The portion of a communications channel that connects not more than one protected premises to a primary or secondary trunk facility. The leg facility includes the portion of the signal transmission circuit from its point of connection with a trunk facility to the point where it is terminated within the protected premises at one or more transponders. (SIG-SSS)

3.3.149 Level Ceilings. See 3.3.38, Ceiling.

3.3.150 Life Safety Network. A type of combination system that transmits fire and emergency communications system data to at least one other life safety system. (SIG-PRO)

3.3.151 Line-Type Detector. See 3.3.70, Detector.

3.3.152 Living Area. Any normally occupiable space in a residential occupancy, other than sleeping rooms or rooms that are intended for combination sleeping/living, bathrooms, toilet compartments, kitchens, closets, halls, storage or utility spaces, and similar areas. [***101***, 2018] (SIG-HOU)

3.3.153 Loading Capacity. The maximum number of discrete elements of fire alarm systems permitted to be used in a particular configuration. (SIG-SSS)

EXHIBIT 3.34

Signaling Line Circuit Interface and Enclosure Cover. (Source: Gamewell-FCI, Northford, CT)

Loading capacity applies to various transmission technologies used by supervising station alarm systems. The loading capacity of a system depends on the performance characteristics of the particular transmission technology employed. Chapter 26 provides the loading capacities for various types of supervising station transmission technologies.

3.3.154 Local Energy–Type Auxiliary Alarm System. See 3.3.221, Public Emergency Alarm Reporting System.

3.3.155* Local Operating Console (LOC). Equipment used by authorized personnel and emergency responders to activate and operate an in-building mass notification system. (SIG-ECS)

A.3.3.155 Local Operating Console (LOC). An LOC allows users within a building to activate prerecorded messages, deliver live voice messages, observe current status of the main autonomous control unit (ACU), or have similar such ACU operator functions at various locations within the building. An LOC serves a similar function as a remote fire alarm annunciator. However, there can be multiple LOC locations within a building, such as on each floor, at each main entry point, at the switchboard or receptionist's console, or as determined by a risk analysis.

3.3.156 Lodging or Rooming House. A building or portion thereof that does not qualify as a one- or two-family dwelling, that provides sleeping accommodations for a total of 16 or fewer people on a transient or permanent basis, without personal care services, with or without meals, but without separate cooking facilities for individual occupants. [***101***, 2018] (SIG-HOU)

3.3.157 Loss of Power. The reduction of available voltage at the load below the point at which equipment can function as designed. (SIG-FUN)

3.3.158 Low-Power Radio Transmitter/Transceiver. Any device that communicates with associated control/receiving equipment or other transceivers by low-power radio signals. (SIG-PRO)

Wireless systems incorporate two-way communications; the term *transceiver* reflects the two-way aspect of this communication.

3.3.159 Maintenance. Work, including, but not limited to, repair, replacement, and service, performed to ensure that equipment operates properly. (SIG-TMS)

Examples of maintenance operations include replacement of batteries and cleaning a smoke detector.

3.3.160 Malicious Alarm. See 3.3.314.1, Malicious Alarm.

3.3.161* Managed Facilities-Based Voice Network (MFVN). A physical facilities-based network capable of transmitting real-time signals with formats unchanged that is managed, operated, and maintained by the service provider to ensure service quality and reliability from the subscriber location to the interconnection point with other MFVN peer networks or the supervising station. (SIG-SSS)

A.3.3.161 Managed Facilities-Based Voice Network (MFVN). Managed facilities-based voice network service is functionally equivalent to traditional PSTN-based services provided by authorized common carriers (public utility telephone companies) with respect to dialing, dial plan, call completion, carriage of signals and protocols, and loop voltage treatment and provides all of the following features:

(1) A loop start telephone circuit service interface.
(2) Pathway reliability that is assured by proactive management, operation, and maintenance by the MFVN provider.
(3) 8 hours of standby power supply capacity for MFVN communications equipment either located at the protected premises or field deployed. Industry standards followed by the authorized common carriers (public utility telephone companies), and the other communications service providers that operate MFVNs, specifically engineer the selection of the size of the batteries, or other permanently located standby power source, in order to provide 8 hours of standby power with a reasonable degree of accuracy. Of course, over time, abnormal ambient conditions and battery aging can always have a potentially adverse effect on battery capacity. The MFVN field-deployed equipment typically monitors the condition of the standby battery and signals potential battery failure to permit the communications service provider to take appropriate action.
(4) 24 hours of standby power supply capacity for MFVN communications equipment located at the communications service provider's central office.
(5) Installation of network equipment at the protected premises with safeguards to prevent unauthorized access to the equipment and its connections.

When providing telephone service to a new customer, MFVN providers give notice to the telephone service subscriber of the need to have any connected alarm system tested by authorized fire alarm service personnel in accordance with Chapter 14 to make certain that all signal transmission features have remained operational. These features include the proper functioning of line seizure and the successful transmission of signals to the supervising station. In this way, the MFVN providers assist their new customers in complying with a testing procedure similar to that outlined in 26.2.7 for changes to providers of supervising station service.

The evolution of the deployment of telephone service has moved beyond the sole use of metallic conductors connecting a telephone subscriber's premises with the nearest telephone service provider's control and routing point (wire center). In the last 25 years, telephone service providers have introduced a variety of technologies to transport multiple, simultaneous telephone calls over shared communication pathways. In order to facilitate the further development of the modernization of the telephone network, the authorized common carriers (public utility telephone companies) have transitioned their equipment into a managed facilities-based voice network (MFVN) capable of providing a variety of communications services in addition to the provision of traditional telephone service.

Similarly, the evolution of digital communications technology has permitted entities other than the authorized common carriers (public utility telephone companies) to deploy robust communications networks and offer a variety of communications services, including telephone service.

These alternate service providers fall into two broad categories. The first category includes those entities that have emulated the MFVN provided by the authorized common carriers. The second category includes those entities that offer telephone service using means that do not offer the rigorous quality assurance, operational stability, and consistent features provided by an MFVN.

The Code intends to only recognize the use of the telephone network transmission of alarm, supervisory, trouble, and other emergency signals by means of MFVNs.

For example, the Code intends to permit an MFVN to provide facilities-based telephone (voice) service that interfaces with the premises fire alarm or emergency signal control unit through a digital alarm communicator transmitter (DACT) using a loop start telephone circuit and signaling protocols fully compatible with and equivalent to those used in public switched telephone networks. The loop start telephone circuit and associated signaling can be provided through traditional copper wire telephone service (POTS — "plain old telephone service") or by means of equipment that emulates the loop start telephone circuit and associated signaling

and then transmits the signals over a pathway using packet switched (IP) networks or other communications methods that are part of an MFVN.

Providers of MFVNs have disaster recovery plans to address both individual customer outages and widespread events such as tornados, ice storms, or other natural disasters, which include specific network power restoration procedures equivalent to those of traditional landline telephone services.

System Design Tip

The term *managed facilities-based voice network (MFVN)* has replaced the term *public switched telephone network (PSTN),* which was used in the requirements for DACTs in 26.6.4.1.

A PSTN had traditionally been viewed as comprising the copper telephone lines and connected system of the local telephone company, sometimes referred to as the "plain old telephone system (POTS)." Telephone (voice) service is now provided not only by the traditional telephone company but also by other service providers. The MFVN incorporates the current state of telephone service, which is provided by traditional telephone providers as well as other non-traditional providers, such as cable providers. In accordance with the current definition of the term *MFVN*, a DACT is permitted to connect to equipment and systems of a telephone service provider using an MFVN. The annex text in A.3.3.161 provides insight into what constitutes an MFVN.

It may be difficult for the designer and the authority having jurisdiction to determine whether the five key features necessary for an MFVN are being provided by the telephone service provider. It may be necessary for the telephone service provider to document that the service meets or exceeds the five features that make up an MFVN. Telephone service that is not provided using a traditional POTS line or via an MFVN would not be permitted for connection to a DACT in accordance with 26.6.4.1.

3.3.162 Manual Fire Alarm Box. See 3.3.12, Alarm Box.

3.3.163* Manufacturer's Published Instructions. Published installation and operating documentation provided for each product or component. The documentation includes directions and necessary information for the intended installation, maintenance, and operation of the product or component. (SIG-TMS)

A.3.3.163 Manufacturer's Published Instructions. Manufacturer's applicable documentation can be subject to revision.

All listed system components include instructions from the manufacturer. These instructions provide valuable information for the use, inspection, testing, and maintenance of the component and should be part of the overall system documentation that is retained by the owner for the life of the system. This information should be made available to maintenance and service personnel conducting system inspection, testing, and maintenance activities.

3.3.164* Mass Notification Priority Mode. The mode of operation whereby all fire alarm occupant notification is superseded by emergency mass notification action. (SIG-ECS)

A.3.3.164 Mass Notification Priority Mode. Nonemergency mass notification activations are not intended to initiate this mode of operation.

MNSs are permitted to override fire alarm signals only when determined by the risk analysis and approved by the authority having jurisdiction. See Section 10.7, Signal Priority.

3.3.165* Mass Notification System. See 3.3.90.1.3, In-Building Mass Notification System. (SIG-PRO)

A.3.3.165 Mass Notification System. A mass notification system can use intelligible voice communications, visual signals, text, graphics, tactile, or other communications methods. The

system can be used to initiate evacuation or relocation or to provide information to occupants. The system can be intended for fire emergencies, weather emergencies, terrorist events, biological, chemical or nuclear emergencies, or any combination of these. The system can be automatic, manual, or both. Access to and control of the system can be from a single, on-site location or can include multiple command locations, including some remote from the area served. Systems can be wired, wireless, or some combination of the two.

3.3.166 Master Box. See 3.3.12, Alarm Box.

3.3.167 Master Fire Alarm Control Unit. See 3.3.108, Fire Alarm Control Unit (FACU).

3.3.168 Multi-Criteria Detector. See 3.3.70, Detector.

3.3.169 Multiple Dwelling Unit. See 3.3.83, Dwelling Unit.

3.3.170 Multiple-Station Alarm. A single-station alarm capable of being interconnected to one or more additional alarms so that the actuation of one causes the appropriate alarm signal to operate in all interconnected alarms. (SIG-HOU)

The term *multiple-station alarm* helps to differentiate between automatic fire detectors connected to and powered by an FACU and interconnected single-station alarms that may be powered by a battery, an alternating current (ac) power source, or both (ac with battery backup). Model building and fire codes typically require the use of multiple-station alarms in residential occupancies when more than one automatic fire detector is required in an occupancy and a household fire alarm system is not provided.

3.3.171 Multiple-Station Alarm Device. Two or more single-station alarm devices that can be interconnected so that actuation of one causes all integral or separate audible alarms to operate; or one single-station alarm device having connections to other detectors or to a manual fire alarm box. (SIG-HOU)

3.3.172 Multiplexing. A signaling method characterized by simultaneous or sequential transmission, or both, and reception of multiple signals on a signaling line circuit, a transmission channel, or a communications channel, including means for positively identifying each signal. (SIG-SSS)

FAQ How is multiplexing used in a protected premises?

Within a protected premises, a fire alarm system may use multiplexing between the FACU and the fire alarm initiating devices and notification appliances, or between the FACU and multiplex interfaces to which the initiating devices or notification appliances connect. A fire alarm system may also use multiplexing between the protected premises and a supervising station as a means of signal transmission.

Multiplexing for fire alarm system signal transmission includes two technologies: active and passive. An active multiplex system establishes two-way communication on an SLC. Devices connected to a passive multiplex system transmit multiple signals over the same SLC. However, the circuit must have some other means to monitor its integrity, which may include a voltage, current, or subcarrier continuously present on the circuit, or other similar means.

In the case of a protected premises application, the multiplex FACU transmits an interrogation signal to the devices, appliances, or their multiplex interfaces connected to the protected premises SLC. The devices, appliances, or multiplex interfaces then transmit a response signal to the FACU. This response signal gives the status of the interrogated unit. This interrogation and response signaling also provides a means to monitor the integrity of the SLC.

In the case of a supervising station application, the supervising station multiplex receiver transmits an interrogation signal to the protected premises FACU or transmitter connected to the supervising station SLC. The control unit or transmitter then transmits a response signal to the supervising station receiver that gives the status of the interrogated unit.

3.3.173 Multi-Sensor Detector. See 3.3.70, Detector.

3.3.174 Municipal Fire Alarm Box (Street Box). A publicly accessible alarm box. (See 3.3.12, Alarm Box.)

3.3.175 Municipal Fire Alarm System. See 3.3.111, Fire Alarm System.

3.3.176 Net-Centric Alerting System (NCAS). A net-centric alerting system incorporates web-based management and alert activation application through which all operators and administrators could gain access to the system's capabilities based on the users' permissions and the defined access policy. (SIG-ECS)

Net-centric alerting system (NCAS) refers to a communications system that is part of a continuously evolving, complex community of people, devices, information, and services interconnected by a communications network to achieve optimal benefit of resources and better synchronization of events and their consequences. Network-centric emergency notification can combine an Internet protocol (IP) network and its connected devices into an effective MNS in times of emergency.

3.3.177 Network.

3.3.177.1 Wired Network (Public Emergency Alarm Reporting Systems). The method of communications used in a public emergency alarm reporting system that consists of two or more points that are connected by physical conductors. (SIG-PRS)

3.3.177.2 Wireless Network (Public Emergency Alarm Reporting Systems). The method of communications used in a public emergency alarm reporting system that consists of two or more points that are not connected by physical conductors. (SIG-PRS)

3.3.178 Network Architecture. The physical and logical design of a network, and the inherent ability of the design to carry data from one point to another. (SIG-ECS)

3.3.179 Noncontiguous Property. See 3.3.213, Property.

3.3.180* Nonrequired. A system component or group of components that is installed at the option of the owner, and is not installed due to a building or fire code requirement. (SIG-FUN)

The term *nonrequired* should not be confused with the term *supplementary*, defined in 3.3.296. The scope of the Code covers not just fire alarm systems but other types of signaling systems as identified throughout the document. A nonrequired system is one that is not required by a building code or by any statutory authority but is installed voluntarily at the request of the owner. Nonrequired systems must comply fully with the applicable requirements and be designed and installed to satisfy the goals intended for the system. The goals and the design intent also must be documented. See 23.3.2.

Consider, for example, a manufacturing building that is not required (per building or fire code) to have a fire detection and notification system. However, due to concerns for a specific room that houses high-value process equipment, the building owner desires to install a fire detection system that will respond to smoke from a fire in the room and notify the fire department and security staff. The owner could provide an alarm system that complies with the prescribed smoke detection spacing requirements or use a performance-based approach for detection in the room. The smoke detection devices,

detection wiring, FACU, backup power requirements, transmission of signals to the supervising station, and installation, testing, and maintenance must meet the applicable requirements. However, since the objective for the nonrequired system is for the specific room, the entire building does not need to be provided with detection or notification appliances.

A.3.3.180 Nonrequired. There are situations where the applicable building or fire code does not require the installation of a fire alarm system or specific fire alarm system components, but the building owner wants to install a fire alarm system or component to meet site-specific needs or objectives. A building owner always has the option of installing protection that is above the minimum requirements of the Code. It is the intent of the Code that any fire alarm system, or fire alarm system components installed voluntarily by a building owner, meet the requirements of the applicable portions of the Code. However, it is not the intent of the Code that the installation of a nonrequired fire alarm system, or fire alarm system components, trigger requirements for the installation of additional fire alarm system components or features. For example, the installation of a fire alarm control unit and fire detectors to service a specific area, such as a computer room or flammable liquid storage room, does not trigger a requirement for audible or visual notification appliances, manual fire alarm boxes, or other fire alarm system features in other parts of the building.

3.3.181 Nonrestorable Initiating Device. See 3.3.141, Initiating Device.

3.3.182 Notification Appliance. A fire alarm system component such as a bell, horn, loudspeaker, visual notification appliance, or text display that provides audible, tactile, or visual outputs, or any combination thereof. (SIG-NAS)

Many types of notification appliances are available. The most common are audible and visual appliances. Exhibits 3.35 and 3.36 illustrate these two types of notification appliances. Exhibit 3.37 shows blue and amber lens visual appliances that might be used in non-fire applications such as MNSs. Other types of notification appliances are used, including tactile notification appliances in the form of bed shakers or vibrating pagers. Olfactory notification appliances are often used in mines and other hazardous locations.

3.3.182.1 Audible Notification Appliance. A notification appliance that alerts by the sense of hearing. (SIG-NAS)

3.3.182.1.1 Exit Marking Audible Notification Appliance. An audible notification appliance that marks building exits and areas of refuge by the sense of hearing for the purpose of evacuation or relocation. (SIG-NAS)

Exhibit 3.38 illustrates an exit marking audible notification appliance.

3.3.182.1.2* Textual Audible Notification Appliance. A notification appliance that conveys a stream of audible information. (SIG-NAS)

A.3.3.182.1.2 Textual Audible Notification Appliance. An example of a textual audible notification appliance is an electrical acoustic transducer that reproduces a voice or tone signal, such as a loudspeaker.

The term *textual audible notification appliance* is used for what most people would call a "speaker" or "loudspeaker." This term is used because in some technical discussions, intelligibility tests, and specifications, the word "speaker" is meant to describe a person who is talking and not the appliance that reproduces that sound.

EXHIBIT 3.35

Audible Notification Appliance. (Source: Gentex Corp., Zeeland, MI)

EXHIBIT 3.36

Visual Notification Appliance. (Courtesy of Eaton, Long Branch, NJ)

EXHIBIT 3.37

Notification Appliances with Blue and Amber Lenses. (Source: Gentex Corp., Zeeland, MI)

EXHIBIT 3.38

Exit Marking Audible Notification Appliance. (Source: System Sensor Corp., St. Charles, IL)

3.3.182.2 Tactile Notification Appliance. A notification appliance that alerts by the sense of touch or vibration. (SIG-NAS)

Tactile notification appliances include vibrating pagers and bed shakers typically used to notify persons with disabilities who are not able to respond to an audible or visual fire alarm notification appliance.

3.3.182.3 Visual Notification Appliance. A notification appliance that alerts by the sense of sight. (SIG-NAS)

3.3.182.3.1* Textual Visual Notification Appliance. A notification appliance that conveys a stream of visual information that displays an alphanumeric or pictorial message. (SIG-NAS)

A.3.3.182.3.1 Textual Visual Notification Appliance. Textual visual notification appliances provide temporary text, permanent text, or symbols and include, but are not limited to, annunciators, monitors, CRTs, displays, and printers.

3.3.183 Notification Appliance Circuit. A circuit or path directly connected to a notification appliance(s). (SIG-PRO)

3.3.184 Notification Zone. See 3.3.328, Zone.

3.3.185 Nuisance Alarm. See 3.3.314.2, Nuisance Alarm.

3.3.186* Occupiable. A room or enclosed space designed for human occupancy. (SIG-FUN)

A.3.3.186 Occupiable. The term *occupiable* is used in this Code and in other governing laws, codes, or standards to determine areas that require certain features of a system. It is important for designers to understand that unless otherwise required, spaces that are not occupiable might not require or need coverage by initiating devices or occupant notification appliances. For example, most closets would not be considered to be occupiable. However, a space of the same size used as a file room would be considered occupiable.

3.3.187 Occupiable Area. An area of a facility occupied by people on a regular basis. (SIG-FUN)

3.3.188* Octave Band. The bandwidth of a filter that comprises a frequency range of a factor of 2. (SIG-NAS)

A.3.3.188 Octave Band. Frequencies are generally reported based on a standard, preferred center frequency, f_c. The bandwidth of a particular octave band has a lower frequency, f_n, and an upper frequency, f_{n+1}. The relationships are as follows:

Δ

$$f_{n+1} / f_n = 2^k \qquad \textbf{[A.3.3.188a]}$$

where:

$k = 1$ for octave bands

$k = 1/3$ for one-third octave bands

and

$$f_c = f_n 2^{1/2} \qquad \textbf{[A.3.3.188b]}$$

For example, the 500 Hz octave band (center frequency) has a lower limit of 354 and an upper limit of 707 Hz. The octave band with a center frequency of 1000 Hz has a lower frequency of 707 Hz and an upper frequency of 1414 Hz.

3.3.188.1 One-Third Octave Band. The bandwidth of a filter that comprises a frequency range of a factor of $2^{1/3}$. (SIG-NAS)

3.3.189 Off-Hook. To access a communications network in preparation for connecting a telephone. (SIG-SSS)

When a telephone handset is lifted from its normal resting position, the telephone instrument is said to be "off-hook." DACTs use equipment to access the MFVN and automatically provide an off-hook condition before beginning a transmission sequence.

3.3.190 One-Third Octave Band. See 3.3.188, Octave Band.

3.3.191 One-Way Emergency Communications System. See 3.3.90, Emergency Communications System.

3.3.192 On-Hook. To disconnect from a managed facilities-based voice network. (SIG-SSS)

When a telephone handset is returned to its normal resting position, the telephone instrument is said to be "on-hook." When a DACT completes its transmission, the associated DACR transmits a "kiss off" signal that completes the transmission sequence and initiates the equipment in the transmitter and receiver to go on-hook and end the communications connection.

3.3.193 Operating Mode.

3.3.193.1 Private Operating Mode. Audible or visual signaling only to those persons directly concerned with the implementation and direction of emergency action initiation and procedure in the area protected by the fire alarm system. (SIG-NAS)

FAQ Which individuals are private operating mode signals intended to alert?

At some locations, the fire alarm system uses the private operating mode to alert individuals who have responsibility to take prescribed action during a fire emergency. Such individuals may include operators in a supervising station, building receptionists, nurses at a nursing station, plant managers, emergency response team members, or other specially trained personnel. Some building codes, NFPA *101*®, and local ordinances may permit private operating mode notification to precede public operating mode notification of the general occupants. The term *private operating mode* does not refer to applications in private versus public buildings.

3.3.193.2 Public Operating Mode. Audible or visual signaling to occupants or inhabitants of the area protected by the fire alarm system. (SIG-NAS)

The fire alarm system uses the public operating mode to notify general building occupants to take specified action during a fire. This action may include complete evacuation of the building or selective, partial evacuation or relocation to areas of refuge within the building. The term *public operating mode* does not refer to applications in public versus private buildings.

3.3.194 Other Fire Detectors. See 3.3.70, Detector.

3.3.195* Ownership. Any property or building or its contents under legal control by the occupant, by contract, or by holding of a title or deed. (SIG-SSS)

A.3.3.195 Ownership. Inspection, testing, and maintenance is the responsibility of the property or building owner, or it can be transferred by contract. Systems installed, owned, or leased by a tenant are the responsibility of the tenant. The installing company should provide written notice of these responsibilities to the system user.

Paragraph 14.2.3.1 requires the property, building, or system owner or the owner's designated representative to be responsible for inspection, testing, and maintenance of the system and for alterations or additions to the system.

3.3.196 Paging System. A system intended to page one or more persons by such means as voice over loudspeaker, coded audible signals or visual signals, or lamp annunciators. (SIG-PRO)

3.3.197 Path (Pathways). Any circuit, conductor, optic fiber, radio carrier, or other means connecting two or more locations. (SIG-PRO)

3.3.198 Pathway Survivability. The ability of any conductor, optic fiber, radio carrier, or other means for transmitting system information to remain operational during fire conditions. (SIG-ECS)

Pathway survivability levels are described in Chapter 12. The survivability levels required for ECSs are in Chapter 24. The performance operational goal is described in 24.4.8.6.1. Where the evacuation or relocation plan in a building calls for partial evacuation, the goal is for the communications systems above and below the fire floor (e.g., in a high-rise) to continue to operate during a fire to allow the fire ground commander the ability to communicate with the occupants in those areas.

3.3.199 Permanent Visual Record (Recording). An immediately readable, not easily alterable, print, slash, or punch record of all occurrences of status change. (SIG-SSS)

3.3.200 Personnel.

3.3.200.1 Inspection Personnel. Individuals who conduct a visual examination of a system or portion thereof to verify that it appears to be in operating condition, in proper location, and is free of physical damage or conditions that impair operation. (SIG-TMS)

3.3.200.2 Service Personnel. Individuals who perform those procedures, adjustments, replacement of components, system programming, and maintenance as described in the manufacturer's service instructions that can affect any aspect of the performance of the system. (SIG-TMS)

3.3.200.3 System Designer. Individual responsible for the development of fire alarm and signaling system plans and specifications in accordance with this Code. (SIG-FUN)

3.3.200.4 System Installer. Individual responsible for the proper installation of fire alarm and signaling systems in accordance with plans, specifications, and manufacturer's requirements. (SIG-FUN)

These definitions describe the roles of various personnel while the specific requirements for each are in Section 10.5.

3.3.200.5 Testing Personnel. Individuals who perform procedures used to determine the status of a system as intended by conducting acceptance, reacceptance, or periodic physical checks on systems. (SIG-TMS)

3.3.201 Photoelectric Light Obscuration Smoke Detection. See 3.3.276, Smoke Detection.

3.3.202 Photoelectric Light-Scattering Smoke Detection. See 3.3.276, Smoke Detection.

3.3.203 Plant. One or more buildings under the same ownership or control on a single property. (SIG-SSS)

3.3.204 Pneumatic Rate-of-Rise Tubing Heat Detector. See 3.3.70, Detector.

3.3.205 Positive Alarm Sequence. An automatic sequence that results in an alarm signal, even when manually delayed for investigation, unless the system is reset. (SIG-PRO)

3.3.206 Power Supply. A source of electrical operating power, including the circuits and terminations connecting it to the dependent system components. (SIG-FUN)

The power supply can be either internal or external to the control unit. Power supplies also include NAC power extenders and remote power supplies.

3.3.207 Primary Battery (Dry Cell). A nonrechargeable battery requiring periodic replacement. (SIG-FUN)

3.3.208 Primary Trunk Facility. That part of a transmission channel connecting all leg facilities to a supervising or subsidiary station. (SIG-SSS)

Δ **3.3.209 Prime Contractor.** The listed central station or listed alarm service local company that is contractually responsible for providing central station services to a subscriber as required by this Code. (SIG-SSS)

The term, *prime contractor*, was revised for the 2019 edition to clarify that the prime contractor can be either a listed central station or a listed alarm service local company. The term *prime contractor* may refer to a person, firm, or corporation listed by an organization acceptable to the authority having jurisdiction to install, maintain, test, and monitor a central station service alarm system. See the definition of the term *listed* in 3.2.5.

For example, an alarm company that has been listed to provide central station service could act as the prime contractor for the account. Likewise, a listed central station may choose to be the account's prime contractor. In both examples, the prime contractor is responsible for providing code-compliant service delivery of all of the necessary elements for central station service in 26.3.2, whether they themselves provide all of the elements or subcontract portions of the necessary elements (see 26.3.3).

3.3.210 Private Operating Mode. See 3.3.193, Operating Mode.

3.3.211 Profound Hearing Loss. See 3.3.128, Hearing Loss.

3.3.212 Projected Beam–Type Detector. See 3.3.70, Detector.

3.3.213 Property.

3.3.213.1 Contiguous Property. A single-owner or single-user protected premises on a continuous plot of ground, including any buildings thereon, that is not separated by a public thoroughfare, transportation right-of-way, property owned or used by others, or body of water not under the same ownership. (SIG-SSS)

3.3.213.2 Noncontiguous Property. An owner- or user-protected premises where two or more protected premises, controlled by the same owner or user, are separated by a public thoroughfare, body of water, transportation right-of-way, or property owned or used by others. (SIG-SSS)

3.3.214 Proprietary Supervising Station. See 3.3.290, Supervising Station.

3.3.215 Proprietary Supervising Station Alarm System. See 3.3.291, Supervising Station Alarm Systems.

3.3.216 Proprietary Supervising Station Service. See 3.3.292, Supervising Station Service.

3.3.217 Protected Premises. The physical location protected by a fire alarm system. (SIG-PRO)

3.3.218 Protected Premises (Local) Control Unit. See 3.3.108, Fire Alarm Control Unit (FACU).

3.3.219 Protected Premises (Local) Fire Alarm System. See 3.3.111, Fire Alarm System.

A protected premises (local) fire alarm system is one that connects to initiating devices, notification appliances, and emergency control functions (and other devices, appliances, systems, or functions) in a building or buildings. See 23.3.3.1 and the definition of the term *fire alarm system* in 3.3.111.

3.3.220 Public Address System. An electronic amplification system with a mixer, amplifier, and loudspeakers, used to reinforce a given sound and distributing the "sound" to the general public around a building. (SIG-ECS)

The means for emergency voice communications to building occupants is normally to use an in-building fire EVACS or an in-building MNS. (These systems may also serve as public address systems.)

3.3.221 Public Emergency Alarm Reporting System. A system of alarm-initiating devices, transmitting and receiving equipment, and communications infrastructure — other than a public telephone network— used to communicate with the communications center to provide any combination of manual or auxiliary alarm service. (SIG-PRS)

The word *emergency* is used rather than the word *fire* to reflect the broader application of *public emergency alarm reporting systems*. See Section 27.8.

3.3.221.1* Auxiliary Alarm System. A protected premises fire alarm system or other emergency system at the protected premises and the system used to connect the protected premises system to a public emergency alarm reporting system for transmitting an alarm to the communications center. (SIG-PRS)

A.3.3.221.1 Auxiliary Alarm System. Alarms from an auxiliary alarm system are received at the communications center on the same equipment and by the same methods as alarms transmitted from public alarm boxes.

3.3.221.1.1 Local Energy–Type Auxiliary Alarm System. An auxiliary system that employs a locally complete arrangement of parts, initiating devices, relays, power supply, and associated components to automatically activate a master box or auxiliary box over circuits that are electrically isolated from the public emergency alarm reporting system circuits. (SIG-PRS)

3.3.221.1.2 Shunt-Type Auxiliary Alarm System. An auxiliary system electrically connected to the public emergency alarm reporting system extending a public emergency alarm reporting circuit to interconnect initiating devices within a protected premises, which, when operated, opens the public emergency alarm reporting circuit shunted around the trip coil of

the master box or auxiliary box. The master box or auxiliary box is thereupon energized to start transmission without any assistance from a local source of power. (SIG-PRS)

3.3.221.2 Type A Public Emergency Alarm Reporting System. A system in which an alarm from an alarm box is received and is retransmitted to an emergency response facility either manually or automatically. (SIG-PRS)

3.3.221.3 Type B Public Emergency Alarm Reporting System. A system in which an alarm from an alarm box is automatically transmitted to an emergency response facility and, if used, is transmitted to supplementary alerting devices. (SIG-PRS)

3.3.222 Public Operating Mode. See 3.3.193, Operating Mode.

3.3.223 Public Safety Agency. A fire, emergency medical services, or law enforcement agency. (SIG-ECS)

3.3.224 Public Safety Radio Enhancement System. A system installed to assure the effective operation of radio communication systems used by fire, emergency medical services, or law enforcement agencies. (SIG-ECS)

Public safety radio enhancement systems, also called two-way radio communications enhancement systems in Section 24.9, are systems used to ensure the performance of public safety radio systems in buildings. These enhancement systems are a common requirement in fire codes for all buildings. Problems often occur in buildings due to radio signal attenuation caused by the building structure itself. These systems ensure that radio coverage is provided adequately throughout the building for the first responders.

3.3.225 Public Safety Radio System. A radio communication system used by fire, emergency medical services, or law enforcement agencies. (SIG-ECS)

3.3.226 Public Switched Telephone Network. See 3.3.297, Switched Telephone Network.

Δ **3.3.227 Publicly Accessible Alarm Box.** See 3.3.12, Alarm Box.

3.3.228* Qualified. A competent and capable person or company that has met the requirements and training for a given field acceptable to the authority having jurisdiction. (SIG-TMS)

A.3.3.228 Qualified. *Qualified* might also mean that the person has knowledge of the installation, construction, or operation of apparatus and the hazards involved.

3.3.229 Radiant Energy–Sensing Fire Detector. See 3.3.70, Detector.

3.3.230 Radio Alarm Repeater Station Receiver (RARSR). A system component that receives radio signals and resides at a repeater station that is located at a remote receiving location. (SIG-SSS)

3.3.231 Radio Alarm Supervising Station Receiver (RASSR). A system component that receives data and annunciates that data at the supervising station. (SIG-SSS)

3.3.232 Radio Alarm System (RAS). A system in which signals are transmitted from a radio alarm transmitter (RAT) located at a protected premises through a radio channel to two or more radio alarm repeater station receivers (RARSR) and that are annunciated by a radio alarm supervising station receiver (RASSR) located at the supervising station. (SIG-SSS)

Exhibit 3.39 illustrates a typical radio alarm system (RAS). An RAS uses a network of radio alarm transmitters (RATs), each connected to an FACU. Signals are transmitted from a protected premises to and through other RATs on the network until the signals reach the radio alarm supervising station receiver (RASSR) at the supervising station. Exhibit 3.40 shows a RAT connected to an FACU.

EXHIBIT 3.39

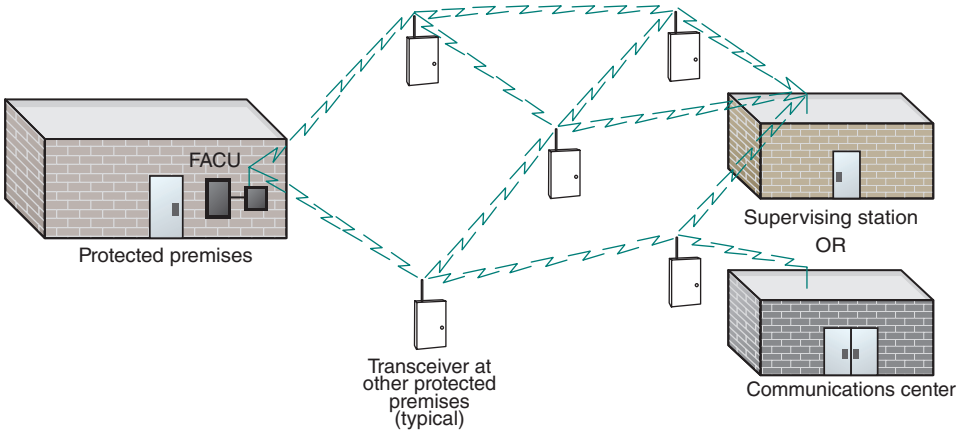

Radio Alarm System (RAS).

EXHIBIT 3.40

A RAT Connected to an FACU. (Courtesy of Warren Olsen, FSCI-Elgin, IL)

3.3.233 Radio Alarm Transmitter (RAT). A system component at the protected premises to which initiating devices or groups of devices are connected that transmits signals indicating a status change of the initiating devices. (SIG-SSS)

3.3.234 Radio Channel. See 3.3.47, Channel.

3.3.235* Radio Frequency. The number of electromagnetic wave frequency cycles transmitted by a radio in 1 second. [**1221,** 2016] (SIG-PRS)

A.3.3.235 Radio Frequency. The present practicable limits of radio frequency (RF) are roughly 10 kHz to 100,000 MHz. Within this frequency range, electromagnetic waves can be

detected and amplified as an electric current at the wave frequency. *Radio frequency* usually refers to the *RF* of the assigned channel. [**1221:**A.3.3.86]

3.3.236 Rate Compensation Detector. See 3.3.70, Detector.

3.3.237 Rate-of-Rise Detector. See 3.3.70, Detector.

3.3.238 Record Drawings. Drawings (as-built) that document the location of all devices, appliances, wiring sequences, wiring methods, and connections of the components of the system as installed. (SIG-FUN)

Record drawings (also called *as-built drawings* or *record set drawings*) provide information that is essential to those who test and maintain the fire alarm system and other signaling systems covered by this Code. These drawings must be developed during the installation by the installer and should consist of original system shop drawings that have been annotated during system installation. Record drawings, based on the shop drawings, must reflect the actual system installation. The drawings show details of how each conductor of each system circuit was installed, the color codes used, the actual location of each device and appliance, terminal cabinets, terminal identifications, and dates of software and system revisions. They also document all field changes that were made during the installation. Any changes made throughout the life of the system must be noted on the record drawings. See 7.5.6.6.1 for further documentation of modifications made after the initial installation.

For requirements and information related to the original fire alarm system shop drawings, refer to Section 7.2 for the minimum documentation requirements, 7.4, 7.4.1, A.7.4.1, and the definition of the term *shop drawings* in 3.3.261.

3.3.239 Record of Completion. A document that acknowledges the features of installation, operation (performance), service, and equipment with representation by the property owner, system installer, system supplier, service organization, and the authority having jurisdiction. (SIG-FUN)

The record of completion is used to verify that the system has been installed according to the specifications and drawings and that the system has been fully tested before the authority having jurisdiction is called for the final inspection. Also refer to the commentary following 7.5.6.1 regarding record of completion.

3.3.240 Releasing Fire Alarm System. See 3.3.111, Fire Alarm System.

3.3.241 Releasing Service Fire Alarm Control Unit. See 3.3.108, Fire Alarm Control Unit (FACU).

3.3.242 Relocation. The directed movement of occupants from one area to another area within the same building. (SIG-PRO)

In hospitals, high-rise buildings, and large-area facilities, where evacuation of all occupants on every alarm signal is impractical and often undesirable, occupants in the fire zone may be directed to move to a specific area where they will be safer. Also refer to the definition of the term *signaling zone* in 3.3.328.2.

3.3.243 Remote Supervising Station. See 3.3.290, Supervising Station.

3.3.244 Remote Supervising Station Alarm System. See 3.3.291, Supervising Station Alarm Systems.

3.3.245 Remote Supervising Station Service. See 3.3.292, Supervising Station Service.

3.3.246 Repeater Station. The location of the equipment needed to relay signals between supervising stations, subsidiary stations, and protected premises. (SIG-SSS)

3.3.247 Reset. A control function that attempts to return a system or device to its normal, nonalarm state. (SIG-FUN)

Reset should not be confused with alarm signal deactivation, which only deactivates the alarm signal and does not return the fire alarm system to its normal standby quiescent condition.

3.3.248 Residential Board and Care Occupancy. An occupancy used for lodging and boarding of four or more residents, not related by blood or marriage to the owners or operators, for the purpose of providing personal care services. [***101*,** 2018] (SIG-HOU)

The definitions for several occupancy terms are included in Chapter 3 to correlate with their use in Chapter 29. Although *NFPA 72* is not an occupancy-based code, some of the installation and performance requirements that are provided in Chapter 29 are specified differently for the different types of occupancies. These terms have been extracted from NFPA *101*.

3.3.249 Residential Occupancy. An occupancy that provides sleeping accommodations for purposes other than health care or detention and correctional. [***101*,** 2018] (SIG-HOU)

3.3.250* Response. Actions performed upon the receipt of a signal. (SIG-FUN)

A.3.3.250 Response. Responses can be effected manually or automatically. One response to a signal might be to activate notification appliances or transmitters, which in turn generate additional signals. See A.3.3.61.

3.3.250.1* Alarm Response. The response to the receipt of an alarm signal. (SIG-FUN)

A.3.3.250.1 Alarm Response. Examples include activation of alarm notification appliances, elevator recall, smoke control measures, emergency responder dispatch, and deployment of resources in accordance with a risk analysis and the associated emergency response plan.

3.3.250.2* Pre-Alarm Response. The response to the receipt of a pre-alarm signal. (SIG-FUN)

A.3.3.250.2 Pre-Alarm Response. Examples include the activation of appropriate notification appliances, dispatch of personnel, investigation of circumstances and problem resolution in accordance with a risk analysis and action plan, preparation for a potential alarm response, and so forth.

3.3.250.3* Supervisory Response. The response to the receipt of a supervisory signal. (SIG-FUN)

A.3.3.250.3 Supervisory Response. Examples include the activation of supervisory notification appliances, the shutdown of machines, fan shutdown or activation, dispatch of personnel, investigation of circumstances and problem resolution in accordance with a risk analysis and action plan, and so forth.

3.3.250.4* Trouble Response. The response to the receipt of a trouble signal. (SIG-FUN)

A.3.3.250.4 Trouble Response. Examples include the activation of trouble notification appliances, dispatch of service personnel, deployment of resources in accordance with an action plan, and so forth.

A response ordinarily occurs on receipt of a signal, which follows the detection of an off-normal condition. The response to a trouble signal depends on several factors, which may include the type of off-normal condition detected and the subsequent predetermined type of signal produced. The response to a trouble signal may vary from the immediate notification of personnel, to the notification of select responders, or to the notification of the supervising station, which in turn may notify emergency personnel and perhaps initiate runner service. Often a received signal may have multiple responses. How quickly a signal is received, and how quickly the resulting response is initiated, are addressed in several chapters.

3.3.251 Response Time Index (RTI). A numerical value that represents the thermal response sensitivity of the sensing element in a heat detector, sprinkler, or other heat-sensing fire detection device to the fire environment in terms of gas temperature and velocity versus time. (*See B.3.3.3.7.*) (SIG-IDS)

The heat transfer from the hot gas ceiling jet of a fire plume into a heat detector–sensing element is not instantaneous — it occurs over a period of time. The measure of the speed with which heat transfer occurs is the response time index (RTI). The RTI value can help to predict heat detector response in varying fire scenarios. This value can be obtained with a plunge tunnel test apparatus, which creates a controlled environment where the temperature and airflow can be adjusted to the desired levels to measure variations in detector response and determine RTI values for heat-sensing devices. The plunge test protocol uses a bench-scale test that eliminates the need for full-scale spacing fire tests. Exhibit 3.41 shows an example of a plunge test device.

3.3.252 Restorable Initiating Device. See 3.3.141, Initiating Device.

3.3.253 Risk Analysis. A process to characterize the likelihood, vulnerability, and magnitude of incidents associated with natural, technological, and manmade disasters and other emergencies that address scenarios of concern, their probability, and their potential consequences. (SIG-ECS)

Requirements for performing a risk analysis are in 24.3.12. Many of the requirements in Chapter 24 are predicated on the performance of a risk analysis to form a basis for the system design, messaging, and signal priorities.

System Design Tip

EXHIBIT 3.41

Plunge Test Device. (Source: FM Approvals, Norwood, MA)

3.3.254 Runner. A person other than the required number of operators on duty at central, supervising, or runner stations (or otherwise in contact with these stations) available for prompt dispatching, when necessary, to the protected premises. (SIG-SSS)

FAQ What are some of the duties that a runner may be asked to perform?

The runner must have the qualifications to perform the required duties at the protected premises. These duties may include resetting equipment; investigating alarm, supervisory, or trouble signals; and taking corrective action when necessary. Runners must receive training so that they have an in-depth knowledge of the fire alarm systems and equipment in the protected premises; however, they may or may not have the knowledge or training to actually service or repair equipment. In some cases, on receipt of a trouble signal from equipment at the protected premises, a supervising station may first dispatch a runner to attempt to determine whether the fire alarm system needs the attention of a qualified service technician.

3.3.255 Runner Service. The service provided by a runner at the protected premises, including restoration, resetting, and silencing of all equipment transmitting fire alarm or supervisory or trouble signals to an off-premises location. (SIG-SSS)

Runner service is generally provided as part of either central station service or a proprietary supervising station alarm system. A runner is sent to the protected premises from which the signal was received and takes appropriate action, as outlined in the FAQ following the definition of the term *runner* in 3.3.254.

3.3.256 Secondary Trunk Facility. That part of a transmission channel connecting two or more, but fewer than all, leg facilities to a primary trunk facility. (SIG-SSS)

3.3.257 Selective Talk Mode. See 3.3.301, Talk Mode.

Δ **3.3.258* Separate Sleeping Area.** The area of a dwelling unit where the bedrooms or sleeping rooms are located. (SIG-HOU)

N **A.3.3.258 Separate Sleeping Area.** Bedrooms (or sleeping rooms) separated by other use areas, such as kitchens or living rooms (but not bathrooms), are considered separate sleeping areas.

3.3.259 Service Personnel. See 3.3.200, Personnel.

3.3.260 Shapes of Ceilings. The shapes of ceilings can be classified as sloping or smooth. (SIG-IDS)

3.3.261* Shop Drawings. Documents that provide information pertaining to the system necessary for installation of a fire alarm and/or signaling system. (SIG-FUN)

Shop drawings are a way to convey information about the system that is to be installed to the authority having jurisdiction and to others. See Section 7.4 for the requirements pertaining to shop drawings and the information that should be included on them. The term *record drawings*, defined in 3.3.238, are the as-built version of the shop drawings. Refer to the commentary following 3.3.238.

A.3.3.261 Shop Drawings. Shop drawings typically include the property location, scaled floor plans, equipment wiring details, typical equipment installation details, riser details, conduit/conductor size, and routing information needed to install a fire alarm and/or signaling system.

3.3.262 Shunt-Type Auxiliary Alarm System. See 3.3.221, Public Emergency Alarm Reporting System.

3.3.263* Signal. An indication of a condition communicated by electrical, visible, visual, audible, wireless, or other means. (SIG-FUN)

A.3.3.263 Signal. See A.3.3.61.

3.3.263.1* Alarm Signal. A signal that results from the manual or automatic detection of an alarm condition. (SIG-FUN)

An alarm signal is a form of notification that is produced to warn of a condition that requires immediate response. It may be related, for example, to a fire or CO condition through the automatic activation of an initiating device, or it may be manually activated to warn of a fire, weather, environmental, or hostile situation.

A.3.3.263.1 Alarm Signal. Examples of alarm signals include outputs of activated alarm initiating devices, the light and sound from activated alarm notification appliances, alarm data transmission to a supervising station, and so forth.

Δ ***3.3.263.2 Carbon Monoxide Alarm Signal.*** A signal indicating a concentration of carbon monoxide at or above the alarm threshold that could pose a risk to the life safety of the occupants and that requires immediate action. (SIG-FUN)

Beginning with the 2019 edition of the Code, the requirements for signals produced when a CO device has been activated are in *NFPA 72*. Signals produced must be distinctive from other similar appliances. The required four-pulse pattern is described in 18.4.3 and Figure 18.4.3.2.

3.3.263.3 Delinquency Signal. A signal indicating a supervisory condition and the need for action in connection with the supervision of guards or system attendants. (SIG-PRO)

A delinquency signal applies only to guard tour systems. Some fire alarm systems are arranged as combination systems that contain specific guard patrol stations at which a touring guard inserts a key that registers a signal to show the date and time a location was visited. If the guard fails to initiate a signal within a prescribed amount of time, the fire alarm system initiates a supervisory signal.

3.3.263.4 Evacuation Signal. A distinctive alarm signal intended to be recognized by the occupants as requiring evacuation of the building. (SIG-PRO)

Fire alarm systems must use a distinctive three-pulse temporal pattern evacuation signal, which is described in 18.4.2. The only exception is where the authority having jurisdiction approves the continued use of a previously established evacuation signal.

3.3.263.5* Fire Alarm Signal. A signal that results from the manual or automatic detection of a fire alarm condition. (SIG-FUN)

Fire alarm signals are not permitted to indicate supervisory or trouble conditions. See Section 10.10 for requirements pertaining to distinctive signals. However, in some cases, a device alarm condition is permitted to be indicated by a supervisory signal. For example, 21.7.4 requires smoke detectors installed in an air duct to initiate a supervisory signal.

A.3.3.263.5 Fire Alarm Signal. Examples include outputs from activated fire alarm initiating devices (manual fire alarm box, automatic fire detector, waterflow switch, etc.), the light and sound from activated fire alarm notification appliances, fire alarm data transmission to a supervising station, and so forth.

3.3.263.6* Guard's Tour Supervisory Signal. A signal generated when a guard on patrol has actuated a guard's tour reporting station. (SIG-PRO)

A.3.3.263.6 Guard's Tour Supervisory Signal. The term *guard's tour supervisory signal*, associated with systems supporting guard's tour supervisory service, is a message indicating that a guard has actuated a guard's tour reporting station (not in itself an indication of a supervisory condition). Guard's tour supervisory signals are not a subset of the general category of supervisory signals as used in this Code.

3.3.263.7* Pre-Alarm Signal. A signal that results from the detection of a pre-alarm condition. (SIG-FUN)

A.3.3.263.7 Pre-Alarm Signal. Examples include outputs of analog initiating devices prior to reaching alarm levels, the light and sound from activated pre-alarm notification appliances, aspiration system outputs indicating smoke at levels below the listed alarm threshold, and so forth.

3.3.263.8 Restoration Signal. A signal that results from the return to normal condition of an initiating device, system element, or system. (SIG-FUN)

3.3.263.9* Supervisory Signal. A signal that results from the detection of a supervisory condition. (SIG-FUN)

A.3.3.263.9 Supervisory Signal. Examples include activated supervisory signal-initiating device outputs, supervisory data transmissions to supervising stations, the light and sound from activated supervisory notification appliances, a delinquency signal indicating a guard's tour supervisory condition, and so forth.

The term *guard's tour supervisory signal*, associated with systems supporting guard's tour supervisory service, is a message indicating that a guard has activated a guard's tour reporting station (not in itself an indication of a supervisory condition). Guard's tour supervisory signals are not a subset of the general category of supervisory signals as used in this Code.

3.3.263.10* Trouble Signal. A signal that results from the detection of a trouble condition. (SIG-FUN)

A.3.3.263.10 Trouble Signal. Examples include off-normal outputs from integrity monitoring circuits, the light and sound from activated trouble notification appliances, trouble data transmission to a supervising station, and so forth.

3.3.264 Signal Transmission Sequence. A DACT that obtains dial tone, dials the number(s) of the DACR, obtains verification that the DACR is ready to receive signals, transmits the signals, and receives acknowledgment that the DACR has accepted that signal before disconnecting (going on-hook). (SIG-SSS)

3.3.265 Signaling Line Circuit. A circuit path between any combination of addressable appliances or devices, circuit interfaces, control units, or transmitters over which multiple system input signals or output signals or both are carried. (SIG-PRO)

3.3.266 Signaling Line Circuit Interface. See 3.3.146, Interface.

3.3.267 Signaling Zone. See 3.3.328, Zone.

3.3.268 Single Dwelling Unit. See 3.3.83, Dwelling Unit.

3.3.269 Single-Station Alarm. A detector comprising an assembly that incorporates a sensor, control components, and an alarm notification appliance in one unit operated from a power source either located in the unit or obtained at the point of installation. (SIG-HOU)

A single-station alarm is, as its names implies, a single alarm device that is designed to be capable of operating by itself or in conjunction with other single-station devices as a multiple-station alarm. See the commentary following the definition of the term *multiple-station alarm* in 3.3.170.

3.3.270 Single-Station Alarm Device. An assembly that incorporates the detector, the control equipment, and the alarm-sounding device in one unit operated from a power supply either in the unit or obtained at the point of installation. (SIG-HOU)

3.3.271 Site-Specific Software. See 3.3.279, Software.

3.3.272 Sloping Ceiling. See 3.3.38, Ceiling.

3.3.273 Sloping Peaked-Type Ceiling. See 3.3.38, Ceiling.

3.3.274 Sloping Shed-Type Ceiling. See 3.3.38, Ceiling.

3.3.275 Smoke Alarm. A single or multiple-station alarm responsive to smoke. (SIG-HOU)

Exhibit 3.42 illustrates a typical single-station smoke alarm.

EXHIBIT 3.42

Single-Station Smoke Alarm. (Source: Gentex Corp., Zeeland, MI)

3.3.276 Smoke Detection.

3.3.276.1 Cloud Chamber Smoke Detection. The principle of using an air sample drawn from the protected area into a high-humidity chamber combined with a lowering of chamber pressure to create an environment in which the resultant moisture in the air condenses on any smoke particles present, forming a cloud. The cloud density is measured by a photoelectric principle. The density signal is processed and used to convey an alarm condition when it meets preset criteria. (SIG-IDS)

FAQ What is cloud chamber smoke detection?

Cloud chamber smoke detection is a form of active air sampling smoke detection. Cloud chamber smoke detectors are extremely sensitive to low levels of combustion products and are frequently used to detect very small fires in vital equipment. Also see the definition of the term *air sampling–type detector* in 3.3.70.1.

3.3.276.2* Ionization Smoke Detection. The principle of using a small amount of radioactive material to ionize the air between two differentially charged electrodes to sense the presence of smoke particles. Smoke particles entering the ionization volume decrease the conductance of the air by reducing ion mobility. The reduced conductance signal is processed and used to convey an alarm condition when it meets preset criteria. (SIG-IDS)

A.3.3.276.2 Ionization Smoke Detection. Ionization smoke detection is more responsive to invisible particles (smaller than 1 micron in size) produced by most flaming fires. It is somewhat less responsive to the larger particles typical of most smoldering fires. Smoke detectors that use the ionization principle are usually of the spot type.

System Design Tip

Although all listed smoke detectors must pass the same series of tests at listing agencies, system designers typically use ionization smoke detectors in places where they expect a greater risk of a flaming rather

than a smoldering fire scenario. Generally, fire scientists consider ionization detectors to be slightly more sensitive to the smaller particles of smoke produced by a flaming fire. In locations where smoldering fires are more likely to occur, photoelectric smoke detectors may offer better protection. Also see the commentary following A.3.3.70.4. Additionally, light-scattering, photoelectric smoke detectors respond better to light-colored smoke than to black particles because black particles absorb light.

Exhibit 3.43 provides details of operation for ionization-type smoke detectors. Measured current flow decreases as smoke particles enter the sensing chamber and attach themselves to ionized air molecules.

3.3.276.3* Photoelectric Light Obscuration Smoke Detection. The principle of using a light source and a photosensitive sensor onto which the principal portion of the source emissions is focused. When smoke particles enter the light path, some of the light is scattered and some is absorbed, thereby reducing the light reaching the receiving sensor. The light reduction signal is processed and used to convey an alarm condition when it meets preset criteria. (SIG-IDS)

A.3.3.276.3 Photoelectric Light Obscuration Smoke Detection. The response of photoelectric light obscuration smoke detectors is usually not affected by the color of smoke.

Smoke detectors that use the light obscuration principle are usually of the line type. These detectors are commonly referred to as projected beam smoke detectors.

Exhibit 3.44 illustrates the principle of operation of a photoelectric light obscuration smoke detector.

EXHIBIT 3.43

Operation of Ionization Smoke Detector.

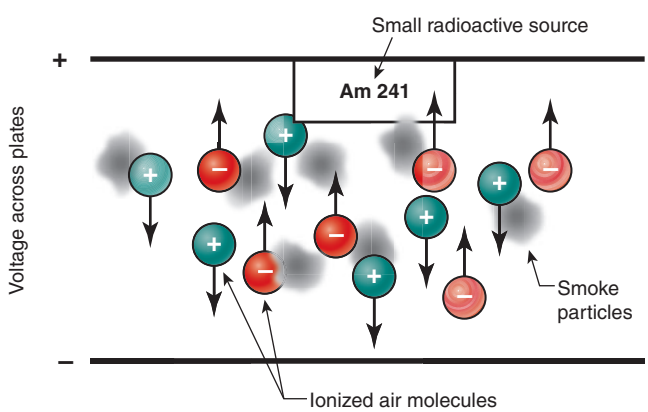

EXHIBIT 3.44

Operation of Photoelectric Light Obscuration Smoke Detector.

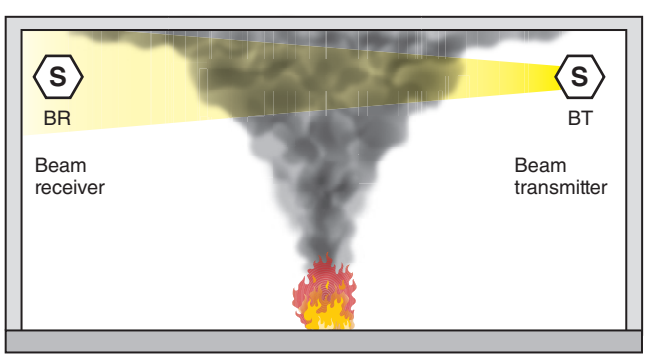

3.3.276.4* Photoelectric Light-Scattering Smoke Detection. The principle of using a light source and a photosensitive sensor arranged so that the rays from the light source do not normally fall onto the photosensitive sensor. When smoke particles enter the light path, some of the light is scattered by reflection and refraction onto the sensor. The light signal is processed and used to convey an alarm condition when it meets preset criteria. (SIG-IDS)

A.3.3.276.4 Photoelectric Light-Scattering Smoke Detection. Photoelectric light-scattering smoke detection is more responsive to the visible particles (larger than 1 micron in size) produced by most smoldering fires. It is somewhat less responsive to the smaller particles typical of most flaming fires. It is also less responsive to black smoke than to lighter colored smoke. Smoke detectors that use the light-scattering principle are usually of the spot type.

System Design Tip

Although all listed smoke detectors must pass the same series of tests at listing agencies, system designers typically use photoelectric smoke detectors in places where they expect a fire to produce large smoke particles, such as with a smoldering fire or an aged smoke scenario. A photoelectric smoke detector is better at detecting large or light-colored particles produced by smoldering fires or smoke particles that have agglomerated or "aged" as the particles move away from the thermal energy source at the fire. Also see the commentary following A.3.3.70.4. In locations where flaming fires are more likely to occur, ionization smoke detectors may offer better protection.

Exhibit 3.45 illustrates the principle of operation of a photoelectric light-scattering smoke detector.

3.3.276.5* Video Image Smoke Detection (VISD). The principle of using automatic analysis of real-time video images to detect the presence of smoke. (SIG-IDS)

A.3.3.276.5 Video Image Smoke Detection (VISD). Video image smoke detection (VISD) is a software-based method of smoke detection that has become practical with the advent of digital video systems. Listing agencies have begun testing VISD components for several manufacturers. VISD systems can analyze images for changes in features such as brightness, contrast, edge content, loss of detail, and motion. The detection equipment can consist of cameras producing digital or analog (converted to digital) video signals and processing unit(s) that maintain the software and interfaces to the fire alarm control unit.

3.3.277 Smoke Detector. See 3.3.70, Detector.

3.3.278 Smooth Ceiling. See 3.3.40, Ceiling Surfaces.

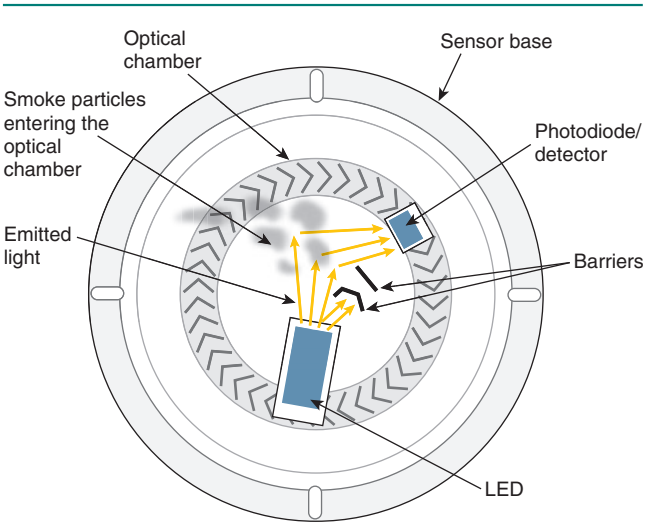

EXHIBIT 3.45

Operation of Photoelectric Light-Scattering Smoke Detector.

3.3.279 Software. Programs, instruments, procedures, data, and the like that are executed by a central processing unit of a product and that influences the functional performance of that product. For the purpose of this Code, software is one of two types: executive software and site-specific software. (SIG-TMS)

3.3.279.1 Executive Software. Control and supervisory program that manages the execution of all other programs and directly or indirectly causes the required functions of the product to be performed. Executive software is sometimes referred to as firmware, BIOS, or executive program. (SIG-TMS)

The executive software of an FACU is similar to an operating system in a computer. The executive software is accessible only to the manufacturer or the manufacturer's authorized service personnel. Site-specific software (see 3.3.279.2) runs on top of the executive software much like a database program runs on top of the operating system software in a computer.

3.3.279.2 Site-Specific Software. Program that is separate from, but controlled by, the executive software that allows inputs, outputs, and system configuration to be selectively defined to meet the needs of a specific installation. Typically it defines the type and quantity of hardware, customized labels, and the specific operating features of a system. (SIG-TMS)

Site-specific software is a program that runs on top of the executive software and is specific to a particular fire alarm system. Site-specific software identifies the initiating devices in the system and each potential input and is the programming that controls each required output.

3.3.280 Solid Joist Construction. See 3.3.40, Ceiling Surfaces.

3.3.281 Spacing. A horizontally measured dimension used as a criterion in determining the allowable coverage of devices. (SIG-FUN)

Spacing refers to the maximum linear horizontal distance permitted between automatic fire detection initiating devices. Spacing is based on the listing of the device for heat detectors and on the requirements in Chapter 17 for smoke detectors.

3.3.282* Spark. A moving particle of solid material that emits radiant energy due to either its temperature or the process of combustion on its surface. [**654,** 2017] (SIG-IDS)

A.3.3.282 Spark. The overwhelming majority of applications involving the detection of Class A and Class D combustibles with radiant energy–sensing detectors involve the transport of particulate solid materials through pneumatic conveyor ducts or mechanical conveyors. It is common in the industries that include such hazards to refer to a moving piece of burning material as a *spark* and to systems for the detection of such fires as *spark detection systems*.

3.3.283 Spark/Ember Detector. See 3.3.70, Detector.

3.3.284 Spark/Ember Detector Sensitivity. The number of watts (or the fraction of a watt) of radiant power from a point source radiator, applied as a unit step signal at the wavelength of maximum detector sensitivity, necessary to produce an alarm signal from the detector within the specified response time. (SIG-IDS)

3.3.285 Spot-Type Detector. See 3.3.70, Detector.

3.3.286 Stakeholder. Any individual, group, or organization that might affect, be affected by, or perceive itself to be affected by the risk. (SIG-ECS)

3.3.287 Stratification. The phenomenon where the upward movement of smoke and gases ceases due to the loss of buoyancy. (SIG-IDS)

FAQ What causes stratification?

The combustion of the fuel in a fire liberates heat. Heat causes the gaseous component of the smoke to expand, making it less dense than the surrounding air. Thus, the smoke is buoyant and flows upward in a plume. As the smoke gases flow upward, they lose heat through two processes. The first process is expansion, in which gases lose heat and cool and they expand. The second process is cool air entrainment, in which cool ambient air is entrained (drawn) into the flow, cooling the plume as the smoke plume rises.

Eventually, these processes cool the smoke to the same temperature and density as the surrounding air. At that point buoyancy is gone, and the smoke stops rising. The plume then spreads out horizontally, regardless of whether it has reached the ceiling of the space. As the fire continues to grow, the height of the smoke layer slowly rises. However, in rooms or compartments with high ceilings, it is conceivable that the smoke would not arrive at ceiling-mounted detectors before the fire has exceeded the design objective. Care must be exercised in the installation of detection devices in areas subject to this phenomenon, such as an atrium, any other high ceiling space, or an area with unusually high upper level airflow. See 17.7.1.11, A.17.7.1.11, and related commentary for more details on this phenomenon and detector placement.

Exhibit 3.46 illustrates stratification. The various levels of stratification shown depend on the fire scenario(s) determined for the space under consideration.

3.3.288 Subscriber. The recipient of a contractual supervising station signal service(s). In case of multiple, noncontiguous properties having single ownership, the term refers to each protected premises or its local management. (SIG-SSS)

3.3.289 Subsidiary Station. A subsidiary station is a normally unattended location that is remote from the supervising station and is linked by a communications channel(s) to the supervising station. Interconnection of signals on one or more transmission channels from protected premises with a communications channel(s) to the supervising station is performed at this location. (SIG-SSS)

Δ **3.3.290 Supervising Station.** A facility that receives signals from alarm systems and at which personnel are in attendance at all times to respond to these signals. (SIG-SSS)

3.3.290.1 Central Supervising Station. A supervising station that is listed for central station service and that also commonly provides less stringent supervising station services such as remote supervising services. (SIG-SSS)

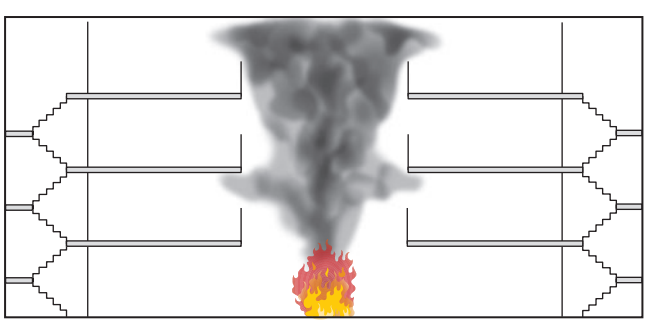

EXHIBIT 3.46

Stratification.

The listed central supervising station (a facility) serves as the constantly attended location that receives signals from the central station service alarm system at the protected premises. Central station operators take action on signals, including initiating a retransmission of the signals, and provide runner service. A central supervising station is illustrated in Exhibit 3.47.

3.3.290.2 Proprietary Supervising Station. A supervising station under the same ownership as the protected premises fire alarm system(s) that it supervises (monitors) and to which alarm, supervisory, or trouble signals are received and where personnel are in attendance at all times to supervise operation and investigate signals. (SIG-SSS)

The proprietary supervising station serves as the constantly attended location that receives signals from protected premises under the same ownership as the proprietary supervising station. Proprietary station operators take action on signals, including initiating a retransmission of the signals and dispatching runners or technicians as needed.

3.3.290.3 Remote Supervising Station. A supervising station to which alarm, supervisory, or trouble signals or any combination of those signals emanating from protected premises fire alarm systems are received and where personnel are in attendance at all times to respond. (SIG-SSS)

The remote supervising station serves as the constantly attended location that receives signals from various protected premises that are typically under different ownerships. Remote supervising stations can include communications centers, fire stations, or other governmental facilities. Other locations can also receive signals as permitted by 26.5.3.1. Remote station operators take action on signals, including initiating a retransmission of the signals (when the remote station is not at the location where signals are transmitted to responding fire apparatus).

EXHIBIT 3.47

Central Supervising Station. (Source: Johnson Controls, Westminster, MA)

3.3.291 Supervising Station Alarm Systems.

3.3.291.1 Central Station Service Alarm System. A system or group of systems in which the operations of circuits and devices are transmitted automatically to, recorded in, maintained by, and supervised from a listed central station that has competent and experienced servers and operators who, upon receipt of a signal, take such action as required by this Code. Such service is to be controlled and operated by a person, firm, or corporation whose business is the furnishing, maintaining, or monitoring of supervised alarm systems. (SIG-SSS)

3.3.291.2 Proprietary Supervising Station Alarm System. An installation of an alarm system that serves contiguous and noncontiguous properties, under one ownership, from a proprietary supervising station located at the protected premises, or at one of multiple noncontiguous protected premises, at which trained, competent personnel are in constant attendance. This includes the protected premises fire alarm system(s); proprietary supervising station; power supplies; signal-initiating devices; initiating device circuits; signal notification appliances; equipment for the automatic, permanent visual recording of signals; and equipment for initiating the operation of emergency building control services. (SIG-SSS)

Many large airports, industrial plants, college campuses, large hospital complexes, department store chains, and detention and correctional facilities use a proprietary supervising station, as shown in Exhibit 3.48, to monitor all portions of the contiguous or noncontiguous protected premises.

3.3.291.3 Remote Supervising Station Alarm System. A protected premises fire alarm system (exclusive of any connected to a public emergency reporting system) in which alarm, supervisory, or trouble signals are transmitted automatically to, recorded in, and supervised from a remote supervising station that has competent and experienced servers and operators who, upon receipt of a signal, take such action as required by this Code. (SIG-SSS)

FAQ When is a remote supervising station alarm system used?

A remote supervising station alarm system provides a supervising station connection for an alarm system at the protected premises when the building owner does not want or is not required to provide

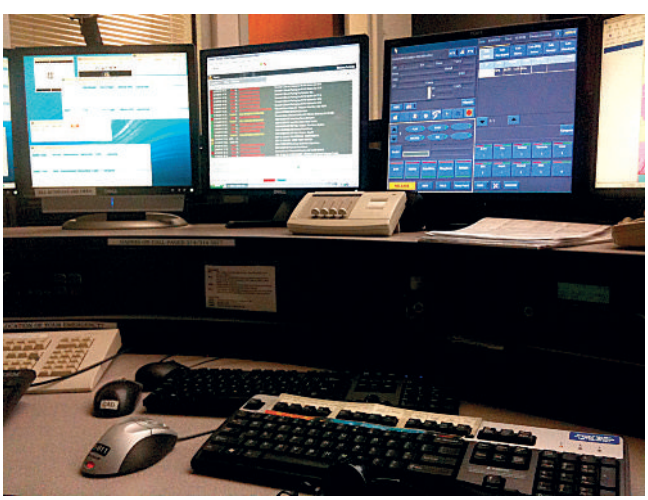

EXHIBIT 3.48

Proprietary Supervising Station. (Source: DFW International Airport)

a central station service alarm system or a proprietary supervising station alarm system. Paragraph 26.5.3.1 permits alarm, supervisory, and trouble signals to be transmitted to four possible sites: a communications center, 26.5.3.1.1; a fire station or other governmental agency, 26.5.3.1.2; an alternate location when approved by the authority having jurisdiction, 26.5.3.1.4; or a listed central supervising station where permitted by the authority having jurisdiction, 26.5.3.1.3. The permitted alternate locations can include a telephone answering service, an alarm monitoring center, or any other constantly attended location acceptable to the authority having jurisdiction. See 26.5.3 for specific allowances and conditions.

3.3.292 Supervising Station Service.

3.3.292.1 Central Station Service. The use of a system or a group of systems including the protected premises fire alarm system(s) in which the operations of circuits and devices are signaled to, recorded in, and supervised from a listed central station that has competent and experienced operators who, upon receipt of a signal, take such action as required by this Code. Related activities at the protected premises, such as equipment installation, inspection, testing, maintenance, and runner service, are the responsibility of the central station or a listed alarm service local company. Central station service is controlled and operated by a person, firm, or corporation whose business is the furnishing of such contracted services or whose properties are the protected premises. (SIG-SSS)

Central station service involves six elements: installation, testing and maintenance, and runner service at the protected premises; and monitoring, retransmission, and record keeping at the central station; see 26.3.2. The prime contractor must provide all six elements of this service to the subscriber to be designated as central station service. The prime contractor must provide this service either alone or in conjunction with subcontractors working with the prime contractor.

3.3.292.2 Proprietary Supervising Station Service. The use of a system or a group of systems including the protected premises fire alarm system(s) in which the operations of circuits and devices are signaled to, recorded in, and supervised from a supervising station under the same ownership as the protected premises that has competent and experienced operators who, upon receipt of a signal, take such action as required by this Code. Related activities at the protected premises, such as equipment installation, inspection, testing, maintenance, and runner service, are the responsibility of the owner. Proprietary supervising station service is controlled and operated by the entity whose properties are the protected premises. (SIG-SSS)

3.3.292.3 Remote Supervising Station Service. The use of a system including the protected premises fire alarm system(s) in which the operations of circuits and devices are signaled to, recorded in, and supervised from a supervising station that has competent and experienced operators who, upon receipt of a signal, take such action as required by this Code. Related activities at the protected premises, such as equipment installation, inspection, testing, and maintenance, are the responsibility of the owner. (SIG-SSS)

3.3.293 Supervisory Service. The service required to monitor performance of guard tours and the operative condition of fixed suppression systems or other systems for the protection of life and property. (SIG-PRO)

3.3.294 Supervisory Signal. See 3.3.263, Signal.

3.3.295 Supervisory Signal Initiating Device. See 3.3.141, Initiating Device.

3.3.296 Supplementary. As used in this Code, *supplementary* refers to equipment or operations not required by this Code and designated as such by the authority having jurisdiction. (SIG-FUN)

For equipment to be designated as supplementary, it must meet two specific conditions. First, the equipment must not be required by the Code. Second, the authority having jurisdiction must specifically declare in writing that the equipment is supplementary. This two-fold test helps to limit the use of supplementary equipment. Use of supplementary equipment is limited because such equipment has relaxed requirements regarding the monitoring of the integrity of system interconnections and power supplies. An example of such equipment may be desktop computers and monitors, which may not be listed for fire alarm use, but are connected to the system to provide additional detailed fire alarm information. A malfunction or failure of supplementary equipment connected to a fire alarm system cannot impair the fire alarm system's operation.

FAQ How is supplementary equipment distinguished from nonrequired equipment?

Supplementary equipment must not be confused with nonrequired components or systems. See the definition of the term *nonrequired* in 3.3.180. While supplementary equipment may be installed at the owner's option, it is not generally considered essential in the intended mission or goals of the fire alarm system. The same cannot be said for nonrequired components and systems, which are not required by a building or fire code, but are needed to fulfill the fire protection goals intended for the system.

3.3.297 Switched Telephone Network.

3.3.297.1 Loop Start Telephone Circuit. A loop start telephone circuit is an analog telephone circuit that supports loop start signaling as specified in either Telcordia *GR-506-CORE, LATA Switching Systems Generic Requirements: Signaling for Analog Interface*, or Telcordia *GR-909-CORE, Fiber in the Loop Systems Generic Requirements*. (SIG-SSS)

3.3.297.2 Public Switched Telephone Network. An assembly of communications equipment and telephone service providers that utilize managed facilities-based voice networks (MFVN) to provide the general public with the ability to establish communications channels via discrete dialing codes. (SIG-SSS)

The definition of the term *public switched telephone network (PSTN)* includes the communications equipment and systems of telephone service providers that use an MFVN. These definitions are integral to the requirements for digital alarm communicator systems used to transmit signals from a protected premises to a supervising station, as provided in 26.6.4. These requirements also include use of the term *loop start telephone circuit*, which is defined in 3.3.297.1, to provide a specific reference to the industry standards used to establish the performance for these circuits. Refer to the definition of *managed facilities-based network (MFVN)* in 3.3.161 and the related annex material and commentary.

3.3.298 System Operator. An individual trained to operate and/or initiate a mass notification system. (SIG-ECS)

3.3.299 System Unit. The active subassemblies at the supervising station used for signal receiving, processing, display, or recording of status change signals; a failure of one of these subassemblies causes the loss of a number of alarm signals by that unit. (SIG-SSS)

3.3.300 Tactile Notification Appliance. See 3.3.182, Notification Appliance.

3.3.301 Talk Mode. A means of communications within a building normally dedicated to emergency functions. Commonly referred to as fire fighters' phones, but can also be used for communications with fire fighters and/or fire wardens, including occupants, during an emergency, such as between a fire command center and a designated location, such as a stair, stairwell, or location of emergency equipment. (SIG-ECS)

3.3.301.1 Common Talk Mode. The ability to conference multiple telephones in a single conversation. This is similar to what was referred to as a party line. (SIG-ECS)

3.3.301.2 Selective Talk Mode. The ability for personnel at the fire command center to receive indication of incoming calls and choose which call to answer. This includes the ability to transfer between incoming calls and conference multiple phone locations. Selective calling can include the ability to initiate calls to emergency phone locations. (SIG-ECS)

3.3.302 Testing Personnel. See 3.3.200, Personnel.

3.3.303 Textual Audible Notification Appliance. See 3.3.182, Notification Appliance.

3.3.304 Textual Visual Notification Appliance. See 3.3.182, Notification Appliance.

3.3.305 Transmission Channel. See 3.3.47, Channel.

3.3.306 Transmitter. A system component that provides an interface between signaling line circuits, initiating device circuits, or control units and the transmission channel. (SIG-SSS)

3.3.307 Transponder. A multiplex alarm transmission system functional assembly located at the protected premises. (SIG-SSS)

3.3.308 Trouble Signal. See 3.3.263, Signal.

3.3.309 Two-Way Emergency Communications System. See 3.3.90, Emergency Communications System.

3.3.310 Type A Public Emergency Alarm Reporting System. See 3.3.221, Public Emergency Alarm Reporting System.

3.3.311 Type B Public Emergency Alarm Reporting System. See 3.3.221, Public Emergency Alarm Reporting System.

3.3.312 Unintentional Alarm. See 3.3.314.3, Unintentional Alarm.

3.3.313 Unknown Alarm. See 3.3.314.4, Unknown Alarm.

3.3.314* Unwanted Alarm. Any alarm that occurs that is not the result of a potentially hazardous condition. (SIG-FUN)

This definition is for received alarm signals that are not a result of a potentially hazardous condition, such as an actual fire. The definitions for four types of unwanted alarm classifications aid in accurately categorizing nonhazardous alarms occurring from fire alarm systems and ultimately the reduction in unwanted alarms.

A.3.3.314 Unwanted Alarm. Unwanted alarms are any alarms that occur when there is no hazard condition present. These are sometimes also called false alarms. Because the term *false* has been used by many people to mean many different things, this Code is instead using the terms *unwanted, fault, nuisance, unintentional, unknown,* and *malicious* to categorize the different types of alarms. Unwanted alarms might be intentional, unintentional, or unknown. If they were caused intentionally, they might have been done by someone with the intent to cause disruption and should be classified as malicious. However, an unintentional alarm might occur when, for example, a child actuated a manual fire alarm box not knowing the consequences. Similarly, someone accidentally causing mechanical damage to an initiating device that results in an alarm is causing an unintentional alarm.

3.3.314.1 Malicious Alarm. An unwanted activation of an alarm initiating device caused by a person acting with malice. (SIG-FUN)

3.3.314.2* Nuisance Alarm. An unwanted activation of a signaling system or an alarm initiating device in response to a stimulus or condition that is not the result of a potentially hazardous condition. (SIG-FUN)

When nuisance alarms are received, their cause should be evaluated to determine whether the alarm activation is a one-time occurrence or whether the situation may be repeated. An example of this would be an alarm from a smoke detector installed in close proximity to a sterilization machine in a hospital where, each time the door is opened following a sterilization process, the smoke detector responds and reports an alarm. Relocating the detector farther from the source of the steam, or using a detector appropriate for the ambient conditions, would eliminate further nuisance alarm reports.

A.3.3.314.2 Nuisance Alarm. Nuisance alarms are unwanted alarms. Sometimes nuisance alarms might be called false alarms. In this Code, any unwanted alarm is considered false because they are not indicative of real hazards. Because the term *false* has been used by many people to mean many different things, this Code is instead using the terms *unwanted, nuisance,* and *malicious* to categorize the different types of alarms. They occur when some condition simulates a fire or other hazardous condition. For example, cigarette smoke can activate smoke detectors and smoke alarms. In that case, there might not be anything wrong with the smoke detector or smoke alarm — it is doing its job responding to the condition or stimulus that it was designed to detect. Another example would be a heat detector or heat alarm that activates when someone inadvertently points a hair dryer towards it. A malicious alarm occurs when someone intentionally activates the detector or alarm when there is no fire hazard. See the definitions of malicious, unintentional, unknown, and unwanted alarms.

3.3.314.3 Unintentional Alarm. An unwanted activation of an alarm initiating device caused by a person acting without malice. (SIG-FUN)

An example of an unintentional alarm might be when a technician is testing a fire pump and the surge from the fire pump test results in the activation of a waterflow device.

3.3.314.4 Unknown Alarm. An unwanted activation of an alarm initiating device or system output function where the cause has not been identified. (SIG-FUN)

3.3.315 Uplink. The radio signal from the portable public safety subscriber transmitter to the base station receiver. (SIG-ECS)

3.3.316* Video Image Flame Detection (VIFD). The principle of using automatic analysis of real-time video images to detect the presence of flame. (SIG-IDS)

A.3.3.316 Video Image Flame Detection (VIFD). Video image flame detection (VIFD) is a software-based method of flame detection that can be implemented by a range of video image analysis techniques. VIFD systems can analyze images for changes in features such as brightness, contrast, edge content, loss of detail, and motion. The detection equipment can consist of cameras producing digital or analog (converted to digital) video signals and processing unit(s) that maintain the software and interfaces to the fire alarm control unit.

3.3.317 Video Image Smoke Detection (VISD). See 3.3.276, Smoke Detection.

3.3.318 Visual Notification Appliance. See 3.3.182, Notification Appliance.

3.3.319 Voice Message Priority. A scheme for prioritizing mass notification messages. (SIG-ECS)

3.3.320 WATS (Wide Area Telephone Service). Telephone company service allowing reduced costs for certain telephone call arrangements. In-WATS or 800-number service calls

can be placed from anywhere in the continental United States to the called party at no cost to the calling party. Out-WATS is a service whereby, for a flat-rate charge, dependent on the total duration of all such calls, a subscriber can make an unlimited number of calls within a prescribed area from a particular telephone terminal without the registration of individual call charges. (SIG-SSS)

3.3.321* Wavelength. The distance between the peaks of a sinusoidal wave. All radiant energy can be described as a wave having a wavelength. Wavelength serves as the unit of measure for distinguishing between different parts of the spectrum. Wavelengths are measured in microns (μm), nanometers (nm), or angstroms (Å). (SIG-IDS)

A.3.3.321 Wavelength. The concept of wavelength is extremely important in selecting the proper detector for a particular application. There is a precise interrelation between the wavelength of light being emitted from a flame and the combustion chemistry producing the flame. Specific subatomic, atomic, and molecular events yield radiant energy of specific wavelengths. For example, ultraviolet photons are emitted as the result of the complete loss of electrons or very large changes in electron energy levels. During combustion, molecules are violently torn apart by the chemical reactivity of oxygen, and electrons are released in the process, recombining at drastically lower energy levels, thus giving rise to ultraviolet radiation. Visible radiation is generally the result of smaller changes in electron energy levels within the molecules of fuel, flame intermediates, and products of combustion. Infrared radiation comes from the vibration of molecules or parts of molecules when they are in the superheated state associated with combustion. Each chemical compound exhibits a group of wavelengths at which it is resonant. These wavelengths constitute the chemical's infrared spectrum, which is usually unique to that chemical.

This interrelationship between wavelength and combustion chemistry affects the relative performance of various types of detectors with respect to various fires.

3.3.322 Wide-Area Mass Notification System. See 3.3.90, Emergency Communications System.

3.3.323 Wide-Area Signaling. Signaling intended to provide alerting or information to exterior open spaces, such as campuses, neighborhood streets, a city, a town, or a community. (SIG-NAS)

3.3.324 Wireless Control Unit. See 3.3.63, Control Unit.

N **3.3.325* Wireless Mesh Network (WMN) (as used in Chapter 26).** A decentralized communications network made up of radio nodes organized in a mesh topology that does not rely on a pre-existing infrastructure. (SIG-SSS)

N **A.3.3.325 Wireless Mesh Network (WMN) (as used in Chapter 26).** Each node participates in routing by forwarding data for other nodes. The data hops from node to node until it reaches the receiving point. Which nodes forward data can be predetermined or determination can be made dynamically on the basis of network connectivity. Wireless mesh networks are often designed to self-form and self-heal. Wireless mesh networks can be implemented with various wireless technologies. (SIG-SSS)

The listed equipment that makes up this type of network satisfies the requirements for one-way private radio alarm systems; see 26.6.5.2. Normally, but not always, these networks are developed by a single entity that uses the network to transmit signals from the protected premises to the supervising station, where possible, based on geographic constraints. Other times the networks provide signal transmission from the protected premises to a point remote from the supervising station. When this occurs, the signals are generally forwarded from the remote point (see 3.3.289 for the definition of *subsidiary station*) to the supervising station by other methods such as dedicated phone lines or IP circuits.

3.3.326 Wireless Protection System. A system or a part of a system that can transmit and receive signals without the aid of interconnection wiring. It can consist of either a wireless control unit or a wireless repeater. (SIG-PRO)

3.3.327 Wireless Repeater. A component used to relay signals among wireless devices, appliances, and control units. (SIG-PRO)

The terms *wireless control unit* (see 3.3.63.4), *wireless protection system* (see 3.3.326), and *wireless repeater* (see 3.3.327) apply to systems covered by Section 23.16.

3.3.328 Zone. A defined area within the protected premises. A zone can define an area from which a signal can be received, an area to which a signal can be sent, or an area in which a form of control can be executed. (SIG-FUN)

The concept of SLC zones was introduced in 23.6.1 in the 2016 edition of the Code. Additional guidance is in A.23.6.1 for providing an acceptable level of performance and reliability of SLCs to limit the potential catastrophic failure where short-circuit faults and open-circuit faults can disable an entire SLC of addressable devices.

3.3.328.1 Notification Zone. A discrete area of a building, or defined area outside a building, in which people are intended to receive common notification. (SIG-PRO)

FAQ What is a notification zone?

A notification zone is the smallest discrete area that is signaled by a system. For a general evacuation system, the notification zone is the entire building, and the signaling zone and the notification zone are the same. The term *notification zone* is not defining a zone based on the area served by an NAC; rather, it is based on the area that receives the signal simultaneously. In a high-rise building, the system may be designed for partial or selective evacuation or relocation. In that case, most building codes require each fire or smoke zone to be a notification zone — typically each floor is a notification zone. If the automatic response to a fire is to signal the fire floor as well as one floor above and one floor below of the need to evacuate or relocate, the signaling zone comprises three notification zones. Each notification zone is determined by the design of the system. Signaling zones may be dynamic. A signaling zone can have more than one notification zone but can never be smaller than a single notification zone.

3.3.328.2* Signaling Zone. An area consisting of one or more notification zones where identical signals are activated simultaneously. (SIG-ECS)

A.3.3.328.2 Signaling Zone. A notification zone is the smallest discrete area used for any announcements or signaling. Depending on the emergency response plan, a signaling zone can encompass several notification zones. For example, in most high-rise buildings, each single floor (fire area) is a notification zone. Most emergency response plans call for the signaling zone to be the fire floor, floor above, and a floor below.

For example, the floors of a high rise that are playing the evacuation message and the "wait in place" message would be in the same notification zone, because they are activated simultaneously. The word "identical" clarifies that the notification zone is communicating a common message.

References Cited in Commentary

Merriam-Webster's Collegiate Dictionary, 11th edition, Merriam-Webster, Inc., Springfield, MA, 2003.

NFPA 70®, *National Electrical Code®*, 2017 edition, National Fire Protection Association, Quincy, MA.

NFPA *101®*, *Life Safety Code®*, 2018 edition, National Fire Protection Association, Quincy, MA.

NFPA 720, *Standard for the Installation of Carbon Monoxide (CO) Detection and Warning Equipment* (withdrawn), National Fire Protection Association, Quincy, MA.

NFPA 1221, *Standard for the Installation, Maintenance, and Use of Emergency Services Communications Systems*, 2019 edition, National Fire Protection Association, Quincy, MA.

Regulations Governing the Development of NFPA Standards, National Fire Protection Association, Quincy, MA.

Reserved Chapters

In the 2019 edition of *NFPA 72®*, *National Fire Alarm and Signaling Code®*, the following chapters are reserved for future use:

- Chapter 4
- Chapter 5
- Chapter 6

Documentation

CHAPTER

7

Chapter 7 is a central location for all documentation requirements. Where documentation requirements are not in Chapter 7, references have been made to information and requirements in other chapters.

The following list is a summary of significant changes to Chapter 7 for the 2019 edition of the Code:

- Revised and added items to the minimum documentation required in 7.2.1 and the Annex.
- Added new requirements to 7.3.3 to ensure the individual preparing the bid documents is qualified to design a fire alarm system.
- Added 7.3.7.4 to reference the documentation requirements in Chapter 24 for performance-based design of mass notification systems.
- Revised 7.5.6.6.1 to identify clearly that as-built drawings are supplemental to original, unaltered drawings.
- Revised 7.7.2.3 to ensure that documentation is not stored in the control unit.
- Revised Figures 7.8.2(a), A.7.8.2(1)(a), and 7.8.2(m) to address carbon monoxide (CO) detection.
- Relocated 7.8.2(3) and Figure 7.8.2(m) from A.29.8.1.4 (2016).

System Design Tip

7.1 Application. (SIG-FUN)

7.1.1 The documentation of the design, acceptance, and completion of new systems required under this Code shall comply with the minimum requirements of this chapter.

7.1.2 The documentation of the alteration, maintenance, and testing of existing systems shall comply with the minimum requirements of this chapter.

Chapter 7 provides minimum documentation requirements for new and existing systems. Subsection 7.1.1 deals with the design, acceptance, and completion of new systems, while 7.1.2 addresses alterations, maintenance, and testing of existing systems. As such, Chapter 7 is similar to Chapter 14, Inspection, Testing, and Maintenance, in its application to new and existing systems. Additional detailed documentation may be required by other governing laws, codes, or standards, or by the enforcing authority.

7.1.3* Where required by governing laws, codes, or standards, or other parts of this Code, the requirements of this chapter, or portions thereof, shall apply.

A.7.1.3 Unless otherwise identified, only the minimum documentation requirements of 7.2.1 apply. More stringent documentation requirements found in other chapters and other laws, codes, and standards, as well as project specifications, should identify any other documentation sections in this chapter that would be applicable.

Requirements for documentation apply only when the need for them is specified in other jurisdictionally adopted requirements. Examples of this are local building or fire codes, and NFPA *101®*, *Life Safety Code®*. Accordingly, this chapter should be used only when directed to do so by another document or by specific chapter requirements found in *NFPA 72®*, *National Fire Alarm and Signaling Code®*.

7.1.4 Unless noted in Chapter 29 or required by other governing laws, codes, or standards, the documentation requirements of this chapter shall not apply to Chapter 29.

For the 2019 edition, Figure 7.8.2(m) was moved from Chapter 29 annex material. Therefore, some parts of Chapter 7 apply to smoke alarms and household alarm systems, such as required in 29.11.6.

7.1.5 This chapter outlines documentation requirements but does not prohibit additional documentation from being provided.

7.1.6 The requirements of Chapters 10, 12, 14, 17, 18, 21, 23, 24, 26, and 27 shall apply unless otherwise noted in this chapter.

7.2* Minimum Required Documentation. (SIG-FUN)

The documentation requirements cover a range of fire alarm and signaling systems. For some small systems, the requirements outlined in 7.2.1 will provide sufficient information for a review to be completed, acceptance testing to be performed, and documentation to be produced for the authority having jurisdiction and the system owner. For other proposed installations, portions, if not all, of Sections 7.3 through 7.5 might be necessary to complete an adequate review and approval for the project, or to provide additional documentation for the owner's records.

A.7.2 It is not intended that all of the details outlined in Sections 7.3 through 7.5 be required for every project. In general, the more complex the system, the more stringent the requirements become for documentation. It is recognized that some projects would require only the minimum documentation listed in Section 7.2. Other projects might require more detailed documentation. Sections 7.3 through 7.5 provide menus of additional means of documenting a system. The intent is for other governing laws, codes, or standards; other parts of this Code; or project specifications or drawings to select the additional specific pieces of documentation from Sections 7.3 through 7.5.

7.2.1* Where documentation is required by the authority having jurisdiction, the following list shall represent the minimum documentation required for new additions or alterations to existing systems:

(1)* Written narrative providing intent and system description

The purpose for a written narrative is to provide a description of the work to be performed and could be as simple as "Install additional three smoke detectors to provide coverage for newly installed meeting room." However, it could be desirable to include why or by whose direction the work is being done, such as "at owner's request," "per specifications dated …," or "at the direction of … ." See also Section 23.3 for additional system feature documentation requirements.

System Design Tip

The following example outlines a possible system narrative and sequence of operation for a remodel of a health care facility's existing admitting area into an emergency department waiting area.

The scope of work for this area is as follows:

1. Provide new fire alarm equipment, devices, and notification appliances within the project area in accordance with the drawings to meet current code requirements.
2. Perform all work in accordance with the project requirements.
3. Provide an addressable relay module and multivoltage relay for the release of roll-down doors, magnetic doors and automatic closing doors, and fire smoke dampers.

4. Connect the new devices to the existing fire alarm control unit (FACU) located in Electrical Room 101 on the ground floor. The existing fire alarm system has the capacity to support the addition of the required devices for the project.
5. Provide a new notification appliance circuit (NAC) originating from the FACU and extend the NAC to include new notification appliances in the project's scope of work.
6. Intercept and expand the existing signaling line circuit (SLC) Loop 1 and connect it to new addressable devices in the designated project area.
7. Conduct a pretest of all new devices and appliances connected to the fire alarm system. The pretest must be witnessed by the project inspector to demonstrate and ensure that the system is ready for the final acceptance test.
8. Conduct a final acceptance test of the fire alarm system and all fire alarm components related to the project's area of work. Final acceptance must be witnessed by the authority having jurisdiction.

Project intent: The fire alarm system basis of design is prescriptive and is intended to meet the applicable codes and standards as indicated. The basis of design is as follows:

1. Smoke detection — provided only at locations to comply with *NFPA 72*.
2. Fire protection system — automatic sprinkler waterflow and supervisory switches are existing and are supervised by the existing FACU at the riser locations.
3. Notification appliances — new wall-mounted notification appliance is provided in the waiting area.
4. Fire alarm circuits — fire alarm circuits must be configured to the following circuit arrangement:
   a. SLC — Class B
   b. NAC — Class B
   c. 24 VDC power circuits? — Class B
   d. Pathway survivability — Level 0

(2) Riser diagram

A riser diagram is a two-dimensional drawing that illustrates the connections between components of the fire alarm system.

(3) Floor plan layout showing locations of all devices, control equipment, and supervising station and shared communications equipment with each sheet showing the following:
   (a) Point of compass (north arrow)
   (b) A graphic representation of the scale used
   (c) Room use identification
   (d) Building features that will affect the placement of initiating devices and notification appliances

Exhibit 7.1 illustrates a simple floor plan with six properly located smoke detectors.

(4) Sequence of operation in either an input/output matrix or narrative form

See Figure A.14.6.2.4 for an example of a typical input/output matrix.

(5) Equipment technical data sheets
(6) Manufacturers' published instructions, including operation and maintenance instructions

EXHIBIT 7.1

Floor Plan Showing Six Properly Located Smoke Detectors. (Source: R. P. Schifiliti Associates, Inc., Reading, MA)

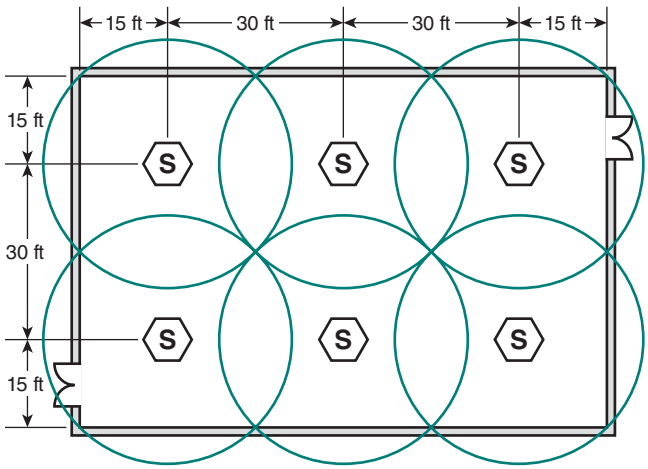

(7) Battery capacity and safety margin calculations (where batteries are provided)
(8) Voltage drop calculations for notification appliance circuits
(9) Mounting height elevation for wall-mounted devices and appliances
(10) Where occupant notification is required, minimum sound pressure levels that must be produced by the audible notification appliances in applicable covered areas
(11) Locations of alarm notification appliances, including candela ratings for visual alarm notification appliances

This information allows the plans reviewer to verify proper appliance coverage with the candela rating identified on the floor plan.

(12)* Pathway diagrams between the control unit and shared communications equipment within the protected premises

N **A.7.2.1(12)** Paragraph 26.6.2.4 allows for the following three communications pathway options when a supervising station fire alarm system is provided:

(1) Performance-based technologies
(2) Digital alarm communicator systems
(3) Radio systems, which includes one-way private and two-way RF systems

Chapter 26 includes several requirements specific to each of these communications pathway alternatives. In order to verify the provided communication path(s), and any shared equipment, comply with Code requirements, the following are examples of information that should be submitted as the minimum documentation for a supervising station fire alarm system:

(1) Performance-based technologies
  (a) The type of performance-based transmitter(s) to be used such as IP communicators, cellular radios, and so forth
  (b) Whether communications with the supervising station will be via a single pathway or a multiple pathway
  (c) An indication of the use, where applicable, of shared equipment such as routers, modems, and LANs within the protected premises
  (d) Battery calculations for the shared equipment, which should meet the requirements of 26.6.3.13

(2) Digital alarm communicator System

(a) The primary communications pathway, which should be a telephone line
(b) The secondary communications pathway, which should comply with 26.6.4.1.4

(3) Radio system

(a) The type of radio system that will be used (private one-way or two-way RF)
(b) The secondary power provided for the radio transmitter

Where the transmitter equipment is located separately from the main fire alarm control unit, an indication of its protection in accordance with 10.4.4 should also be provided within the minimum documentation.

Annex material was added to the 2019 edition of the Code to provide communication pathway options referenced in Chapter 26.

(13) Completed record of completion in accordance with 7.5.6 and 7.8.2
(14) For software-based systems, a copy of site-specific software, including specific instructions on how to obtain the means of system and software access (password)

Requirements for providing a copy of the site-specific software, passwords, and instructions are in 7.5.7.

(15) Record (as-built) drawings

The original, unaltered documentation should be supplemented, not replaced, by as-built drawings. See 7.5.6.6.1.

(16) Records, record retention, and record maintenance in accordance with Section 7.7

(17) Completed record of inspection and testing in accordance with 7.6.6 and 7.8.2

Documentation required by 7.2.1(1) through 7.2.1(9) is typically provided as part of the permit submittal process for a new system or the alteration of an existing system. Other documentation required by 7.2.1(10) through 7.2.1(15) is provided at the system's commission. This additional information allows the authority testing the system to understand the parameters the system is designed to meet and perform beyond the standard functions. Still other documentation required by 7.2.1(16) and 7.2.1(17) is made available as the system is used and maintained during its life. This type of documentation is important for any improvements or modifications to the system.

Many jurisdictions require a permit for the installation or modification of a system before that work occurs. The local authority having jurisdiction should be contacted to determine what the submittal requirements include. Additionally, more than one authority having jurisdiction could be regulating the work, and while a nongovernmental authority having jurisdiction may not issue a permit for the proposed work, they may be in a position to approve or deny the proposed installation on behalf of the owner or insurance carrier.

Due diligence is always vital. Meeting with the authority having jurisdiction before the system design occurs often saves time and money, especially when it comes to the permit review process.

A.7.2.1 In many cases, the installer might not have adequate record drawings or other completion documentation for the existing system. As an example, where a temporary school building is being installed, the fire alarm system subpanel in the temporary building should be fully documented, but the fire alarm system for the entire existing school might be so old that adequate documentation might not exist. In this example, documentation required in

Section 7.2 should be completed only for the new subpanel and the interfaces to the existing school fire alarm system.

7.2.2 System design documents shall identify the name and contact information of the system designer.

System Design Tip

The requirement to identify the system designer on the system design documents encourages the designer to take ownership of the design. This identification, in turn, provides an additional incentive for the designer to meet the requirements. It also provides the authorities having jurisdiction with a person to contact if they have questions or comments.

System Design Tip

Paragraph 10.5.1.3 contains system designer qualifications, and 10.5.1.6 permits the authority having jurisdiction to request proof of designer qualifications. The designer should consider providing this information with the minimum design documentation.

7.2.3 All fire alarm drawings shall use symbols described in NFPA 170 or other symbols acceptable to the authority having jurisdiction.

The symbols used on fire alarm drawings should be standardized as described in NFPA 170, *Standard for Fire Safety and Emergency Symbols*, or as permitted by the authority having jurisdiction. The use of NFPA 170 allows for a consistent use of fire alarm equipment symbols within jurisdictions and simplifies symbol identification for the alarm industry when designing plans for submittal and approval.

7.3 Design (Layout) Documentation.

Design (layout) documentation could be simply a drawing showing device locations used for bidding/pricing purposes, or it could be complete shop drawings that indicate device locations, wiring information, calculations, and wiring details for installation purposes.

7.3.1* The requirements of Section 7.3 shall apply only where required by other governing laws, codes, or standards; by other parts of this Code; or by project specifications or drawings. (SIG-FUN)

A.7.3.1 See Section 7.2 for the minimum documentation requirements.

7.3.2* Where required by governing laws, codes, or standards, or other parts of this Code, design (layout) documents shall be prepared prior to installing new systems and additions or alterations to existing systems. (SIG-ECS)

A.7.3.2 Design (layout) documents should contain information related to the system that could include specifications, shop drawings, input/output matrix, battery calculations, notification appliance voltage drop calculations for visual notification appliances and loudspeakers, and product technical data sheets.

Design (layout) documents could include such items as preliminary plans issued as guidance and direction, risk analysis, emergency response plan, or a combination of these.

Deviations from requirements of governing laws, codes, standards, or preliminary plan requirements specified by an engineer should be clearly identified and documented as such.

Documentation of equivalency, where applicable, should be provided in accordance with Section 1.5 and be included with the record drawings.

It is the intent that existing systems that are altered should have design (layout) documents prepared that are applicable only to the portion(s) of the system being altered.

7.3.3* Where required by governing laws, codes, or standards, or other parts of this Code, preliminary plans shall be created. (SIG-ECS)

A.7.3.3 Preliminary plans such as those used for bidding, solicitation, or for obtaining permits could contain information as follows:

Performance criteria required in support of alternative means and methods for other codes, standards, or construction features should be clearly identified on the design (layout) documentation.

Such information should reference applicable waivers, appeals, variances, or similarly approved deviations from prescriptive criteria.

Preliminary documents could include the following:

(1) Specifications and narrative applicable to the project
(2) Interface requirements between systems such as fire alarm, mass notification, security, HVAC, smoke control, paging, background music, audio visual equipment, elevators, access control, other fire protection systems, and so forth
(3)* Sequence of operation
(4) Survivability of system circuits and equipment, when applicable
(5) Notification zones, when applicable
(6) Message content for voice systems
(7) Means of system monitoring that is to be provided, when applicable
(8) Codes and editions applicable to the system(s)
(9) Special requirements of the owner, governing authority, or insurance carrier, when applicable
(10) Voice delivery components beyond standard industry products required to achieve intelligibility

When devices are located (spaced) on preliminary drawings, the devices should be located (spaced) in accordance with standards, listings, and limitations of the equipment specified. When devices are not located (spaced) on the preliminary documents, a note should be included directing that the spacing should be per listing(s) and this Code.

When known, acoustic properties of spaces should be indicated on the preliminary design (layout) documents.

The architect/engineer preparing bid documents should not simply require a contractor to install a fire alarm system in accordance with codes, but rather outline the intended minimum performance criteria to be achieved in accordance with Section 7.3, with guidance from A.7.3.3.

System Design Tip

The purpose of having an architect/engineer is to prepare design bid documents that will benefit the owner, occupants, and the authority having jurisdiction. The architect/engineer should be accountable to provide a system that complies with both the Code and the requirements of the owner.

Engineers that are not qualified to call out, specify, or review shop drawings related to fire alarm systems might include a statement on the bid documents, instructing the contractor to install the system in accordance with the Code. This should be accompanied by minimum performance criteria to assist the contractor in applying the Code to the specific circumstances of the installation and to ensure that the system meets the owner's needs.

N **7.3.3.1** When a design professional is preparing design documents that will incorporate new or modifications to a fire alarm or emergency communication system covered by this Code, preliminary bid documents shall be prepared in accordance with Section 7.3.

N **7.3.3.2** The design professional shall be qualified to prepare fire alarm design documents in accordance with 10.5.1.

N **7.3.3.3** Design documents shall incorporate performance criteria to ensure that the system will provide a beneficial component to the fire and life safety needs of the owner, occupants, and authority having jurisdiction.

N **7.3.3.4** Design documents shall clearly communicate the intended performance and functionality expected by all installing contractors.

N **7.3.3.5** For spaces designated as acoustically distinguishable spaces (ADS) in accordance with 18.4.11, the design professional shall coordinate with other design disciplines so that intelligibility of messages can be achieved utilizing the emergency communications equipment as specified in the design documents and available to contractors/installers.

System Design Tip

Paragraphs 7.3.3.1 through 7.3.3.5 ensure that the individual preparing the bid documents is qualified to design a fire alarm system or emergency communication system. These requirements hold the design professional accountable for providing the minimum required information on design documents.

7.3.4 Notification. (SIG-NAS)

System Design Tip

Where occupant notification is required, the minimum documentation indicated in 7.2.1 needs to be expanded to ensure that the system design meets the requirements of Chapter 18, Notification Appliances; other applicable sections of this Code; and other building and fire codes. When audible signals are part of the design, 7.3.4.2 requires verification of the expected average and maximum ambient sound levels in all areas where audible signals are required to be produced using public or private mode. The design documentation should state how the system design would meet the required decibel (dB) level over the ambient noise present without exceeding the maximum sound pressure level permitted. Refer to 18.4.1 for general requirements for audible notification appliances.

Although uncommon, when narrow band tone signaling is used, 7.3.4.3 requires additional analysis and design documentation to be submitted to the authority having jurisdiction in accordance with 18.4.7.4. When this signaling is encountered, the authority having jurisdiction will need to review and interpret the data provided. This might require the additional services of a fire alarm design professional with the skills necessary to review the design. Section 7.5.8 outlines the requirements for verification of a compliant installation by a third-party organization.

Where voice intelligibility is required, the documentation should identify acoustically distinguishable spaces (ADSs) throughout the building. Paragraph 18.4.11.2 requires identification of ADSs where intelligibility is not required.

Where visible signals are required, the design documents must clearly identify the use for each room or space to verify compliance. Other codes and standards identify rooms and spaces where visible signaling must be provided or where it is not needed. The design documents must provide the location of the visible notification appliance(s) in the space, whether they are wall-mounted or ceiling-mounted, and the candela rating marking.

7.3.4.1* The requirements of 7.3.4 shall apply only where required by other governing laws, codes, or standards, or by other parts of this Code.

A.7.3.4.1 See Section 7.2 for the minimum documentation requirements.

7.3.4.2 Design documents shall include ambient sound pressure levels and audible design sound pressure levels in accordance with 18.4.1.5.4.

7.3.4.3 Analysis and design documentation for narrow band tone signaling shall be in accordance with 18.4.7.4.

7.3.4.4 The documentation of acoustically distinguishable spaces (ADS) shall be in accordance with 18.4.11.

7.3.4.5 Design documents shall specify the rooms and spaces that will have visual notification and those where visual notification will not be provided in accordance with 18.5.2.1.

7.3.4.6 Performance-based design alternatives for visual notification appliance design shall be in accordance with 18.5.5.7.2.

7.3.5 Detection. (SIG-IDS)

System Design Tip

Performance objectives based on the type of automatic detection chosen should be identified in the system documentation. See 17.6.1.1, 17.7.1.1, and 17.8.1.1. For example, the performance objective might be to detect the likely products of combustion or flame from a specific material using a specific detector type. By documenting this information, the designer provides a better understanding of the purpose and importance of using the selected detection to those who will review the design and those who will install and later maintain the system.

7.3.5.1 Heat-Sensing Fire Detectors. Heat detection design documentation shall be provided in accordance with Section 17.6.

7.3.5.2 Smoke-Sensing Fire Detectors. Smoke detection design documentation shall be provided in accordance with Section 17.7.

7.3.5.3 Radiant Energy-Sensing Fire Detectors. Radiant energy detection design documentation shall be provided in accordance with Section 17.8.

7.3.5.4 Gas Detectors. Gas detection design documentation shall be provided in accordance with Section 17.10.

CO detection documentation should be provided in accordance with Section 17.12.

7.3.6* Risk Analysis Documentation. (SIG-ECS)

System Design Tip

Risk analysis is an important step in the effective design of every mass notification system. The considerations taken into account during the planning stage and the findings used to develop a mass notification plan or procedure should be well documented, especially when using a performance-based design. Goals and objectives of a performance-based system (see 24.12.1) — which include the risk analysis, system performance and testing criteria, survivability, timeliness of messages to the target audiences, and its methods for message initiation — should all be documented so they can be reviewed and evaluated by interested and affected parties. Refer to the definition of the term *risk analysis* in 3.3.253.

A risk analysis is a means of defining and analyzing potential danger to individuals, businesses, and government agencies by natural or manmade events. A risk analysis could be an evaluation of the various levels of risk to a campus or building. An analysis could look into the probability of someone coming onto a campus with a gun by researching the crime rate and incidences with guns in the neighborhood surrounding the campus. The probability of employee violence could be evaluated by review of employee surveys, termination papers, or talking to employees. Examples of other data to consider in a risk analysis include Federal Emergency Management Agency (FEMA) maps, terrorist incidents, technological risks, informational risks, and internal incidences.

A.7.3.6 The Risk Analysis Checklist in Figure A.7.3.6 is not mandatory, but it can be used to initiate the thought process for identifying hazards in a facility.

RISK ANALYSIS CHECKLIST

Facility name: _____ Facility location: _____

Prepared by: _____ Date prepared: _____

Title and contact information: _____

ECS system type: _____

PART ONE: Identification of Assets or Operations at Risk

Use Part One of this checklist to identify the following assets or operations at risk at your facility

❏ **People**
- ❏ Employees
- ❏ Visitors and guests
- ❏ Contractors working on site
- ❏ Emergency responders
- ❏ Community surrounding the facility

❏ **Property**
- ❏ Physical property
  - ❏ Corporate offices
  - ❏ Manufacturing facilities
  - ❏ Call center
  - ❏ Distribution centers
  - ❏ Data-processing center
  - ❏ Research and development labs
  - ❏ Property on the premises of others
  - ❏ Vital papers, records, and drawings
- ❏ Intellectual property
  - ❏ Copyright and patent infringement
  - ❏ Trademark infringement
  - ❏ Theft of intellectual property
  - ❏ Theft of information
- ❏ Utilities
  - ❏ Telecommunications
  - ❏ Electricity
  - ❏ Water
  - ❏ Gas
  - ❏ Steam
  - ❏ Heating/ventilation/air conditioning
  - ❏ Pollution control
  - ❏ Sewerage system
  - ❏ Other critical infrastructure
- ❏ Computers and computer networks
  - ❏ Software applications
  - ❏ Electronic data
- ❏ Inventory
  - ❏ Raw materials
  - ❏ Finished product

❏ **Operations**
- ❏ Manufacturing processes
- ❏ Delivery of services
- ❏ Administrative support services
- ❏ Research and development
- ❏ Supply chain

❏ **Environment**
- ❏ Air
- ❏ Water
- ❏ Ground

❏ **Organization**
- ❏ Economic and financial condition
- ❏ Licenses, patents, or trademarks
- ❏ Reputation and image as well-managed company
- ❏ Contractual obligations
- ❏ Community relationships
- ❏ Regional and national impact
- ❏ Regulatory compliance and relationships with vendors

© 2018 National Fire Protection Association NFPA 72 (p. 1 of 2)

Δ ***FIGURE A.7.3.6*** *Risk Analysis Checklist.*

RISK ANALYSIS CHECKLIST *(continued)*

PART TWO: Determination of Facility Hazards

Use Part Two of this checklist to determine the potential hazards that may impact your facility.

❑ Natural Hazards—Geological

- ❑ Earthquake
- ❑ Tsunami
- ❑ Volcano
- ❑ Landslide, mudslide, subsidence
- ❑ Glacier, iceberg

❑ Natural Hazards—Meteorological

- ❑ Flood, flash flood, tidal surge
- ❑ Drought
- ❑ Windstorm, tropical cyclone, hurricane, tornado, water spout, dust/sand storm
- ❑ Extreme temperatures (heat, cold)
- ❑ Lightning strikes
- ❑ Famine
- ❑ Geomagnetic storm
- ❑ Snow, ice, hail, sleet, avalanche

❑ Natural Hazards—Biological

- ❑ Diseases (pandemic)
- ❑ Animal or insect infestation or damage

❑ Human-Caused Accidental Events

- ❑ Hazardous material (explosive, flammable liquid, flammable gas, flammable solid, oxidizer, poison, radiological, corrosive) spill or release
- ❑ Natural gas leak
- ❑ Nuclear power plant incident
- ❑ Hazmat incident off site
- ❑ Explosion/fire
- ❑ Wildfire (forest, range, urban, wildland, urban interface)
- ❑ Transportation accident (motor vehicle, railroad, watercraft, aircraft pipeline)
- ❑ Building/structure failure or collapse
- ❑ Entrapment
- ❑ Mechanical breakdown
- ❑ Energy/power/utility failure
- ❑ Fuel/resource shortage
- ❑ Air/water pollution, contamination
- ❑ Water control structure/dam/levee failure
- ❑ Communications systems interruptions
- ❑ Financial issues, economic depression, inflation, financial system collapse
- ❑ Misinformation

❑ Human-Caused Intentional Events

- ❑ Terrorism (explosive, chemical, biological, radiological, nuclear, cyber)
- ❑ Sabotage or vandalism
- ❑ Civil disturbance, public unrest, mass hysteria, riot
- ❑ Enemy attack, war
- ❑ Insurrection
- ❑ Strike or labor dispute
- ❑ Demonstration
- ❑ Disinformation
- ❑ Criminal activity (vandalism, arson, theft, fraud, embezzlement, data theft)
- ❑ Electromagnetic pulse
- ❑ Physical or information security breach
- ❑ Sniper incident
- ❑ Crime, theft, or robbery
- ❑ Product defect or contamination
- ❑ Harassment
- ❑ Arson
- ❑ Bomb threat
- ❑ Lost person
- ❑ Child abduction
- ❑ Kidnap
- ❑ Extortion
- ❑ Hostage incident
- ❑ Workplace violence

❑ Technological-Caused Events

- ❑ Telecommunications
- ❑ Central computer, mainframe, software, or application (internal/external)
- ❑ Energy/power/utility
- ❑ Ancillary support equipment

© 2018 National Fire Protection Association NFPA 72 (p. 2 of 2)

Δ ***FIGURE A.7.3.6*** *Continued*

7.3.6.1 When a risk analysis is required to be prepared, findings and considerations of the risk analysis shall be documented.

7.3.6.2 When determined by the stakeholders, security and protection of the risk analysis documentation shall be in accordance with 7.3.7 and Section 7.7.

7.3.6.3 The risk analysis documentation shall list the various scenarios evaluated and the anticipated outcomes.

7.3.6.4 Risk analyses for mass notification systems shall be documented in accordance with 7.3.6 and 24.3.12.

7.3.7* Performance-Based Design Documentation.

Performance-based designs must be submitted to the authority having jurisdiction for review and approval. Sufficient information needs to be included in the design submittal to assess what is being proposed and to determine if the proposed design will meet the stated performance objective(s) adequately. During the completion documentation phase of accepting a new system, 7.5.2 permits the authority having jurisdiction to require a written statement indicating that the system has been installed in accordance with approved plans and tested in accordance with the manufacturer's published instructions. The written statement should include any performance-based design approvals that were a part of the system's overall approval prior to installation.

Paragraphs 7.3.7.1 through 7.3.7.5 reference requirements elsewhere in the Code that pertain to performance-based design documentation for certain types of systems or equipment.

A.7.3.7 When a system or component is installed in accordance with performance-based design criteria, such systems should be reviewed and acceptance tested by a design professional to verify that performance objectives are attained.

Due to unique design and construction challenges, fire protection concepts are often established on performance-based engineering practices. When such practices have been approved by the authority having jurisdiction, the engineer of record should sign off on the final installation documents to ensure that all conditions have been satisfied. Such engineering analysis could be beyond the qualifications of the code authority. As such, it is imperative that the engineer of record review and accept final concepts as accepted by the authority having jurisdiction.

7.3.7.1 Performance-based design documentation for fire detection shall be in accordance with Section 17.3. (SIG-IDS)

7.3.7.2 Performance-based design documentation for visual notification appliances shall be in accordance with 18.5.5.7.2. (SIG-NAS)

7.3.7.3 A copy of approval documentation resulting from performance-based designs shall be included with the completion documentation in accordance with Section 7.5. (SIG-FUN)

N **7.3.7.4** Performance-based design documentation for mass notification systems shall be in accordance with Section 24.12.

The design of the mass notification system must be documented in a design brief that uses recognized performance-based design practices to demonstrate that the specifications are realistic and sustainable. The design brief must also contain specific testing requirements that are necessary to maintain reliable performance of the system.

7.3.7.5 Performance-based design documentation for signaling line circuit zoning shall be in accordance with 23.6.1.4 and 23.6.1.5. (SIG-PRO)

Paragraphs 23.6.1.4 and 23.6.1.5 permit the designer to submit a documented performance-based design with technical substantiation used in establishing the proposed zone performance.

System Design Tip

7.3.8 Emergency Response Plan Documentation. (SIG-ECS)

See the definition of the term *emergency response plan* in 3.3.97. An emergency response plan is an important part of any building's (or campus') procedures. It provides building occupants directions for what they should do under various emergencies. Each emergency could require a different action, and it is important that occupants do not panic but respond in an appropriate and consistent manner.

Major items that should be covered in the documentation include the following:

1. Emergency contacts for each company in the building, as well as building contacts (This will help ensure that all personnel are accounted for during an emergency.)
2. Action plans for different types of emergencies (Some types of emergencies to include are fire alarm, bomb threat, active shooter, earthquake, and power loss.)
3. Building floor plans showing emergency exits, emergency phones, paths of egress, fire extinguishers, and stairways
4. Instructions on the steps to be taken in reporting an emergency

Also note that an emergency response plan for a mass notification system could be much broader and would be in concert with the risk analysis.

The following references might be helpful in developing a holistic emergency response plan:

- *NFPA 1600, Standard on Disaster/Emergency Management and Business Continuity/Continuity of Operations Programs*
- NFPA 1616, *Standard on Mass Evacuation, Sheltering, and Re-entry Programs*
- NFPA 1620, *Standard for Pre-Incident Planning*
- NFPA 3000™ (PS), *Standard for an Active Shooter/Hostile Event Response (ASHER) Program*

7.3.8.1 When an emergency response plan is required to be prepared, such as for a mass notification system, findings of the plan shall be documented.

7.3.8.2 When identified by the stakeholders, security and protection of the emergency response plan documentation shall be in accordance with 7.7.3.

7.3.8.3 The emergency response plan shall document the various scenarios evaluated and the anticipated outcomes.

7.3.9 Evaluation Documentation. (SIG-FUN)

7.3.9.1* Evaluation documentation shall include a signed statement(s) by the person responsible for the design attesting to the evaluation and the resultant technical decision and deeming it reliable and acceptable for the particular application.

Paragraph 23.4.3.1 provides pathway classification requirements for initiating device circuits (IDCs), SLCs, NACs, and so on. Paragraph 7.3.9.1 requires a signed statement attesting to the evaluation and selection of Class A vs. Class B vs. Class N vs. Class X for the designed system. See the commentary following 12.1.1.

Pathway requirements of Class N (Ethernet technology) do not necessarily follow the same wiring requirements of Class A, Class B, and Class X wiring. While traditional devices are installed on the same communications line, Ethernet operates on a switching network that directs the information to the intended endpoint device. As a result, this documentation requirement is even more important with a Class N system.

System Design Tip

System Design Tip

Where a system design includes interfaces between features such as mass notification functions and public address systems, documentation submitted by the system designer must attest that the systems are functioning as intended once they have been installed.

A.7.3.9.1 Evaluation documentation can also include documentation such as that associated with performance-based alternatives and documentation related to equivalencies as well as any other special documentation that is specific to a particular system. Examples of where evaluations might be required are found in 23.4.3.1 and 24.5.24.2.

Δ **7.3.9.2** A copy of the evaluation documentation shall be retained for the life of the system and be maintained with the documents required by 7.7.1.6.

7.4 Shop Drawings (Installation Documentation). (SIG-FUN)

7.4.1* The requirements of Section 7.4 shall apply only where required by other governing laws, codes, or standards; by other parts of this Code; or by project specifications or drawings.

Most jurisdictions require the submittal of shop drawings and related calculations when a permit is requested for the installation of a new system. Many jurisdictions will also require some shop drawings and calculations when a system is altered to verify that the existing system can handle the alteration without the addition of panel modules. When the system cannot handle the alteration without adding new modules, while ensuring compatibility and reviewing any secondary power considerations, new modules will need to be added. The extent of the documentation is related to the scope of the project and the amount of information the plan's reviewer needs to conduct a permit review and approval. Due diligence goes a long way toward understanding what the necessary submittal package will need to include. See Exhibit 7.2 for a partial view of a shop drawing.

A.7.4.2 It is important to note that shop drawings and particularly the word "sheets" do not necessarily mean physical paper sheets, but could be on electronic media.

Many jurisdictions still rely on paper sheets for shop drawings. However, some jurisdictions allow uploading electronic media, such as PDF files, to a designated submittal website for review.

EXHIBIT 7.2

Typical Shop Drawing. (Source: Warren Olsen, FSCI-Elgin, IL)

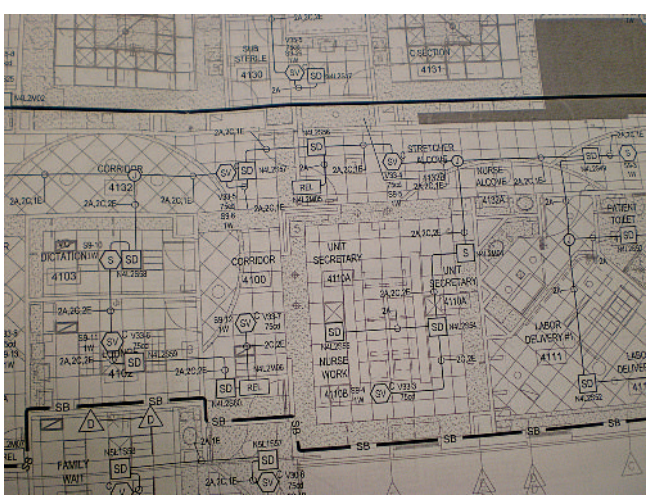

7.4.3 Shop drawings for fire alarm and emergency communications systems shall provide basic information and shall provide the basis for the record (as-built) drawings required in accordance with 7.5.2.

7.4.4 Shop drawings shall include the following information:

(1) Name of protected premises, owner, and occupant (where applicable)
(2) Name of installer or contractor
(3) Location of protected premises
(4) Device legend and symbols in accordance with NFPA 170, or other symbols acceptable to the authority having jurisdiction
(5) Date of issue and any revision dates

7.4.5 Floor plan drawings shall be drawn to an indicated scale and shall include the following information, where applicable for the particular system:

(1) Floor or level identification
(2) Point of compass (indication of North)
(3) Graphic scale
(4) All walls and doors
(5) All partitions extending to within 15 percent of the ceiling height (where applicable and when known)
(6) Room and area descriptions
(7) System devices/component locations
(8) Locations of fire alarm primary power disconnecting means
(9) Locations of monitor/control interfaces to other systems
(10) System riser locations
(11) Type and number of system components/devices on each circuit, on each floor or level
(12) Type and quantity of conductors and conduit (if used) for each circuit
(13) Identification of any ceiling over 10 ft (3.0 m) in height where automatic fire detection is being proposed
(14) Details of ceiling geometries, including beams and solid joists, where automatic fire detection is being proposed
(15) Where known, acoustic properties of spaces

7.4.6 System riser diagrams shall be coordinated with the floor plans and shall include the following information:

(1) General arrangement of the system in building cross-section
(2) Number of risers
(3) Type and number of circuits in each riser
(4) Type and number of system components/devices on each circuit, on each floor or level
(5) Number of conductors for each circuit

7.4.7 Control unit diagrams shall be provided for all control equipment (i.e., equipment listed as either a control unit or control unit accessory), power supplies, battery chargers, and annunciators and shall include the following information:

(1) Identification of the control equipment depicted
(2) Location(s) of control equipment
(3) All field wiring terminals and terminal identifications
(4) All circuits connected to field wiring terminals and circuit identifications
(5) All indicators and manual controls
(6) Field connections to supervising station signaling equipment, releasing equipment, or emergency safety control interfaces, where provided

7.4.8 Typical wiring diagrams shall be provided for all initiating devices, notification appliances, remote indicators, annunciators, remote test stations, and end-of-line and power supervisory devices.

7.4.9* A narrative description or input/output matrix of operation shall be provided to describe the sequence of operation.

A.7.4.9 For an example of an input/output matrix of operation, see A.14.6.2.4.

7.4.10 System calculations shall be included as follows:

(1) Battery calculations
(2) Notification appliance circuit voltage drop calculations
(3) Other required calculations, such as line resistance calculations, where required

7.5 Completion Documentation.

7.5.1* The requirements of Section 7.5 shall apply only where required by other governing laws, codes, or standards; by other parts of this Code; or by project specifications or drawings. (SIG-FUN)

A.7.5.1 See Section 7.2 for the minimum documentation requirements.

7.5.2 Before requesting final approval of the installation, if required by the authority having jurisdiction, the installing contractor shall furnish a written statement stating that the system has been installed in accordance with approved plans and tested in accordance with the manufacturer's published instructions and the appropriate NFPA requirements. (SIG-FUN)

7.5.3 All systems including new systems and additions or alterations to existing systems shall include the following documentation, which shall be delivered to the owner or the owner's representative upon final acceptance of the system:

(1)* An owner's manual and manufacturer's published instructions covering all system equipment
(2) Record (as-built) drawings in accordance with 7.5.5
(3) A completed record of completion form in accordance with 7.5.6
(4) For software-based systems, record copy of the site-specific software in accordance with 7.5.7

(SIG-FUN)

A record copy of the site-specific software must be delivered to the owner or the owner's representative on final acceptance of the system. Having a backup copy will help facilitate reconfiguring the system in situations where a catastrophic failure has occurred due to lightning or other causes. Refer to the definition of the term *site-specific software* in 3.3.279.2. The site-specific software is the system programming for its specific application and not the executive software or the source code used to develop the site-specific software.

Δ **A.7.5.3(1)** An owner's manual should contain the following documentation:

(1) A detailed narrative description of the system inputs, evacuation signaling, ancillary functions, annunciation, intended sequence of operations, expansion capability, application considerations, and limitations.
(2) A written sequence of operation in matrix or narrative form.

(3) Operator instructions for basic system operations, including alarm acknowledgment, system reset, interpretation of system output (LEDs, CRT display, and printout), operation of manual evacuation signaling and ancillary function controls, and change of printer paper.
(4) A detailed description of routine maintenance and testing as required and recommended and as would be provided under a maintenance contract, including testing and maintenance instructions for each type of device installed. This information should include the following:
    (a) Listing of the individual system components that require periodic testing and maintenance
    (b) Step-by-step instructions detailing the requisite testing and maintenance procedures, and the intervals at which these procedures are to be performed, for each type of device installed
    (c) A schedule that correlates the testing and maintenance procedures
(5) A service directory, including a list of names and telephone numbers of those who provide service for the system.

In addition to the owner's manual and manufacturer's published instructions, it is advisable to include a copy of the edition of *NFPA 72* that was used to design the system. By having this document on file, the owner will be able to ascertain the inspection, testing, and servicing frequencies and requirements for the system and, for historical purposes, the prescriptive- and performance-based design requirements that were in effect when the system was installed.

7.5.4 For new emergency communications systems, an owner's manual shall be provided and shall contain the following documentation:

(1) Detailed narrative description of the system inputs, evacuation signaling, ancillary functions, annunciation, intended sequence of operations, expansion capability, application considerations, and limitations
(2) Written sequence of operation for the system including an operational input/output matrix
(3) Operator instructions for basic system operations, including alarm acknowledgment, system reset, interpretation of system output (LEDs, CRT display, and printout), operation of manual evacuation signaling and ancillary function controls, and change of printer paper
(4) Detailed description of routine maintenance and testing as required and recommended and as would be provided under a maintenance contract, including testing and maintenance instructions for each type of device installed, which includes the following:
    (a) Listing of the individual system components that require periodic testing and maintenance
    (b) Step-by-step instructions detailing the requisite testing and maintenance procedures, and the intervals at which those procedures shall be performed, for each type of device installed
    (c) Schedule that correlates the testing and maintenance procedures that are required by this section
(5) Service directory, including a list of names and telephone numbers of those who provide service for the system
(6) Product data sheets for all system equipment (SIG-ECS)

In the 2016 edition of the Code, the requirements for an owner's manual for new emergency communications systems (ECSs) were moved from Chapter 24 to 7.5.4.

7.5.5 Record Drawings (As-Builts). (SIG-FUN)

7.5.5.1 Record drawings shall consist of current updated shop drawings reflecting the actual installation of all system equipment, components, and wiring.

Drawings turned over to the system owner should accurately reflect the installation that occurred. As-built drawings provide invaluable assistance when repairs or changes need to be made. Coupled with the written sequence of operation, the as-builts also allow for the orderly and thorough testing of all system components when routine inspection and testing are scheduled to occur.

7.5.5.2* A sequence of operations in input/output matrix or narrative form shall be provided with the record drawings to reflect actual programming at the time of completion.

An on-site copy of the sequence of operation enables those who work on, or those who provide further designs to the existing system, to have a full understanding of how the system is intended to work. As these systems become more complex and have more interactions with other building systems, the information provided in the sequence of operation document is critical.

The accompanying Closer Look is an example of a narrative form for a sequence of operation.

Closer Look

System Operation

The addressable fire alarm system shall perform the following functions:

- Continuously monitor the status of all fire alarm SLCs, initiating devices, notification appliances, and remote panels
- Operate all audible and visual signals
- Transmit a common alarm, supervisory, and trouble signal to the listed central station

On change in status of any initiating device on the system, the FACU shall:

- Activate audible and visual status change indicators and display the system point number, point description, and message associated with the point on the system's operator terminal and remote annunciator
- Permanently record the change in status, time, date, point description, and message associated with the point on the printer

Activation of any manual fire alarm box, waterflow switch, smoke detector, heat detector, beam smoke detector, or other fire alarm initiating device shall cause the following functions to occur:

- Activate audible and visual status change indicators and display the system point number, point description, and message associated with the point on the system's operator terminal and remote annunciator
- Activate the audible and visual notification appliances and transmit a tone throughout the building
- Transmit an alarm signal to the listed central station in accordance with the input/output matrix
- Operate other fire safety functions in accordance with the input/output matrix

Activation of any supervisory signal-initiating device shall cause the following functions to occur:

- Activate audible and visual status change indicators and display the system point number, point description, and message associated with the point on the system's operator terminal and remote annunciator
- Transmit a common supervisory signal to the listed central station in accordance with the input/output matrix

Closer Look *(Continued)*

Detection of any fire alarm system impairment, including a single break/open, ground fault, loss of primary (ac) power supply, absence of a battery supply, low battery voltage, or removal of any system detector or alarm panel module shall cause the following functions to occur:

- Activate audible and visual status change indicators and display the system point number, point description, and message associated with the point on the system's operator terminal and remote annunciator
- Transmit a common trouble signal to the listed central station in accordance with the input/output matrix

When any point in the system returns to normal, the following functions of the FACU shall occur:

- Activate audible and visual indicators and display point identification, time, date, and message
- Print the time, date, point identification, and message, in acknowledgment of "system return to normal"
- Silence all audible indicators associated with the point at the FACU

A.7.5.5.2 For an example of an input/output matrix of operation, see A.14.6.2.4.

7.5.5.3 Where necessary, revised calculations in accordance with 7.4.10 shall be provided depicting any changes due to installation conditions.

Deviations from approved plans frequently occur during the installation of a system. In addition to the changes being noted on the as-built drawings and documented on the record of completion, changes affecting calculations need to be documented and verified to be correct. Changes could impact standby power and NACs, the loop resistance of a circuit, or the permitted number of devices on an SLC.

Technicians are often not aware of the impact that changing visible appliance candela settings or installing appliances at locations other than where they have been approved has on the system calculations. These changes may result in batteries being incapable of providing the necessary standby power or circuits being overloaded or overextended beyond acceptable limits or the manufacturer's published instructions.

7.5.5.4 Record drawings shall be turned over to the owner with a copy placed inside the documentation cabinet in accordance with Section 7.7.

7.5.5.5* Record drawings shall include approval documentation resulting from variances, performance-based designs, risk analyses, and other system evaluations or variations.

A.7.5.5.5 It is important that the documentation required by this section is available for technicians so they will be able to recognize variations of system configuration during acceptance, reacceptance, and periodic testing. It is also necessary for enforcement personnel in order to prevent confusion when they could otherwise misidentify an approved variation for being non-code compliant. This documentation is also necessary for those who might design additions or modifications.

7.5.6 Record of Completion. (SIG-FUN)

7.5.6.1* The record of completion shall be documented in accordance with 7.5.6 using either the record of completion forms, Figure 7.8.2(a) through Figure 7.8.2(f), or an alternative document that contains only the elements of Figure 7.8.2(a) through Figure 7.8.2(f) applicable to the installed system.

A record of completion form is required for all installed fire alarm systems and ECSs to document the system installation, including the name of the installer and the location of record drawings, owner's manuals, and test reports. The form also provides a confirming record of the acceptance test and gives

details of the components and wiring of the system. Examples of completed forms have been provided in Figures A.7.8.2(1)(a) through A.7.8.2(1)(f).

A.7.5.6.1 It is the intent of this section to permit using forms other than Figure 7.8.2(a) through Figure 7.8.2(f) as long as they convey the same information.

Δ **7.5.6.2*** The record of completion documentation shall be completed by the installing contractor and submitted to the authority having jurisdiction and the owner at the conclusion of the job. The record of completion documentation shall be permitted to be part of the written statement required in 7.5.2 and part of the documents that support the requirements of 7.5.8. When more than one contractor has been responsible for the installation, each contractor shall complete the portions of the documentation for which that contractor has responsibility.

A.7.5.6.2 Protected premises fire alarm systems are often installed under construction or remodeling contracts and subsequently connected to a supervising station alarm system under a separate contract. All contractors should complete the portions of the record of completion documentation for the portions of the connected systems for which they are responsible. Several partially completed documents might be accepted by the authority having jurisdiction provided that all portions of the connected systems are covered in the set of documents.

7.5.6.3* The preparation of the record of completion documentation shall be the responsibility of the qualified and experienced person in accordance with 10.5.2.

FAQ

Who is responsible for completing the record of completion form?

The system installer is responsible for the preparation of the record of completion form.

Δ **A.7.5.6.3** The requirements of Chapter 14 should be used to perform the installation wiring and operational acceptance tests required when completing the record of completion.

The record of completion form shall be permitted to be used to record decisions reached prior to installation regarding intended system type(s), circuit designations, device types, notification appliance type, power sources, and the means of transmission to the supervising station.

7.5.6.4 The record of completion documentation shall be updated in accordance with 7.5.6.6 to reflect all system additions or modifications.

7.5.6.5 The updated copy of the record of completion documents shall be maintained in a documentation cabinet in accordance with 7.7.2.

7.5.6.6 Revisions.

7.5.6.6.1 All modifications made after the initial installation shall be recorded on a revised version of the original completion documents, which shall serve as a supplement to the original, unaltered completion documents.

7.5.6.6.2 The revised record of completion document shall include a revision date.

7.5.6.6.3* Where the original or the latest overall system record of completion cannot be obtained, a new system record of completion shall be provided that documents the system configuration as discovered during the current project's scope of work.

System Design Tip

Documentation of revisions made to a system after installation is just as important as documentation of the original installation. Every change to the system must be documented so that designers, service personnel, and others will know exactly what is on the system and how the system is to function.

In cases where a record of completion does not exist, it is not required that one be completed retroactively for the entire system when revisions are made to portions of the system. This record of completion is only required to provide pertinent information based on the revisions to the existing fire alarm system.

A.7.5.6.6.3 It is the intent that if an original or current record of completion is not available for the overall system, the installer would provide a new record of completion that addresses items discovered about the system. The installer will complete the respective sections related to the overall system that have been discovered under the current scope of work. It is not the intent of this section to require an in-depth evaluation of an existing system solely for the purpose of completing a system-wide record of completion.

7.5.6.7 Electronic Record of Completion.

7.5.6.7.1 Where approved by the authority having jurisdiction, the record of completion shall be permitted to be filed electronically instead of on paper.

A record of completion that is filed electronically indicates that the individual or entity — the owner, equipment supplier, service company, or installer — has a copy of it in their media records. Refer to 7.7.2 regarding storage and access to electronic documentation.

7.5.6.7.2 If filed electronically, the record of completion document shall be accessible with standard software and shall be backed up.

7.5.7 Site-Specific Software. (SIG-TMS)

Subsection 7.5.7 was revised in the 2016 edition of the Code to include the software documentation requirements that had been in Chapter 14. The intent is to provide authorized service personnel with an on-site copy of the site-specific software. The on-site copy should provide a means to recover the last installed and tested version of the site-specific operation of the system. This typically would be an electronic copy of the source files required to load an external programming device with the site-specific data. It is intended that this copy of the software be an electronic version stored on a nonrewritable media containing all of the file(s) or data necessary to restore the system. A historical record of the system installation that includes the required information gives the technician valuable assistance in promptly diagnosing and repairing system faults. Paragraph 7.5.7.1 requires that a copy of the site-specific software, such as programmed detector locations, be provided to the system owner or owner's designated representative. This helps verify proper identification of installed addressable devices.

7.5.7.1 For software-based systems, a copy of the site-specific software shall be provided to the system owner or owner's designated representative.

7.5.7.1.1 The site-specific software documentation shall include both the user passcode and either the system programming password or specific instructions on how to obtain the programming password from the system manufacturer.

7.5.7.1.2 The passwords provided shall enable currently certified qualified programming personnel to access, edit, modify, and add to the existing system site-specific software.

7.5.7.2 A copy of the site-specific software shall be stored on-site in nonvolatile, nonerasable, nonrewritable memory.

7.5.8* Verification of Compliant Installation. (SIG-FUN)

A.7.5.8 This section is intended to provide a basis for the authority having jurisdiction to require third-party verification and certification that the authority having jurisdiction and the

system owner can rely on to reasonably assure that the fire alarm system installation complies with the applicable requirements. Where the installation is an extension, modification, or reconfiguration of an existing system, the intent is that the verification be applicable only to the new work and that reacceptance testing be acceptable.

7.5.8.1 Where required by the authority having jurisdiction, compliance of the completed installation with the requirements of this Code shall be certified by a qualified and impartial third-party organization acceptable to the authority having jurisdiction.

The authority having jurisdiction is permitted to mandate a third-party review and certify an installation for compliance with *NFPA 72*. A third party is an independent entity that has the experience and knowledge to review and certify an installation for compliance with *NFPA 72*. This requirement applies to all systems and is not the same as the documentation required for central station alarm systems in 26.3.4.

7.5.8.2 Verification of compliant installation shall be performed according to testing requirements and procedures specified in 14.4.1 and 14.4.2.

7.5.8.3 Verification shall ensure that:

(1) All components and functions are installed and operate per the approved plans and sequence of operation.
(2) All required system documentation is complete and is archived on site.
(3) For new supervising station systems, the verification shall also ascertain proper arrangement, transmission, and receipt of all signals required to be transmitted off-premises and shall meet the requirements of 14.4.1 and 14.4.2.
(4) For existing supervising station systems that are extended, modified, or reconfigured, the verification shall be required for the new work only, and reacceptance testing in accordance with Chapter 14 shall be acceptable.
(5) Written confirmation has been provided that any required corrective actions have been completed.

7.5.9 Documentation of central station service shall be in accordance with 26.3.4. (SIG-SSS)

7.5.10 Documentation of remote station service shall be in accordance with 26.5.2. (SIG-SSS)

7.6 Inspection, Testing, and Maintenance Documentation. (SIG-TMS)

7.6.1 Test plan documentation shall be provided in accordance with 14.2.10.

Subsection 14.2.10 requires that a written test plan be created. This is particularly important when the fire alarm system interfaces with other functions, including those functions covered by Chapter 21. The test plan and the test results are to be documented and kept with the system records.

It is important to make sure that other systems that interface with fire alarm systems as part of the fire alarm sequence of operation are properly tested as part of an integrated test plan developed in accordance with NFPA 4, *Standard for Integrated Fire Protection and Life Safety System Testing*. It is also important that the interactions of the various systems being tested are included in the system documentation. This is especially important when system interfaces are complex.

The following is a list of items that could be included in a test plan:

1. Information regarding the test, such as the intent of the test, established criteria of the design documents, applicable codes, and administrative procedures
2. Documentation that could include the following:

a. Log books
b. Daily reports
c. Issued nonconformance reports
d. Resolved nonconformance reports
e. Final report
f. Information on the equipment to be reviewed and on the visual inspection of items that could include the following:
  i. Fire alarm devices
  ii. Smoke barriers
  iii. Ducts
  iv. Dampers
  v. Fans
  vi. Doors
  vii. Electrical systems
  viii. Interface relays
  ix. Other supervisory devices

3. Information on the test methods, the test operating mode (normal or abnormal conditions), and the items to be tested, which could include the following:
a. Initiating devices
b. Fans
c. Duct leakage
d. Air balancer

The interface documentation is an invaluable resource for maintenance and future modification of the system. If a building owner is contemplating a fire alarm upgrade and does not have the proper record documentation, it can be difficult to determine the system's interfaces and sequence of operation, which are important details to ensure that the modified system operates as intended.

7.6.2 Acceptance testing documentation shall be provided in accordance with 14.6.1.

7.6.3 Reacceptance test documentation shall be provided in accordance with 14.6.1.

7.6.4 Periodic inspection and testing documentation shall be provided in accordance with 14.6.2 through 14.6.4.

7.6.5 Impairment documentation shall be provided in accordance with Section 10.21.

7.6.6 Record of Inspection and Testing. The record of all inspections, testing, and maintenance as required by 14.6.2.4 shall be documented using either the record of inspection and testing forms, Figure 7.8.2(g) through Figure 7.8.2(l), or an alternative record that includes all the applicable information shown in Figure 7.8.2(g) through Figure 7.8.2(l).

7.7 Records, Record Retention, and Record Maintenance.

7.7.1 Records. (SIG-FUN)

7.7.1.1 A complete record of the tests and operations of each system shall be kept until the next test and for 1 year thereafter unless more stringent requirements are required elsewhere in this Code.

Records need to be maintained for longer periods when sensitivity testing or heat detector testing is extended for longer periods (see 14.4.4.3.3.1 and 14.4.4.5).

7.7.1.2* The records shall be available for examination and, if required, reported to the authority having jurisdiction. Archiving of records by any means shall be permitted if hard copies of the records can be provided promptly when requested.

A.7.7.1.2 It is intended that archived records be allowed to be stored in electronic format as long as hard copies can be made from them when required.

7.7.1.3 If off-premises monitoring is provided, records of all signals, tests, and operations recorded at the supervising station, including the public emergency alarm reporting system, shall be maintained by the off-premise monitoring service provider for not less than 1 year unless more stringent requirements are required elsewhere in this Code.

Keeping good records on the system is very important. The records must include not only the installation, programming, and sequence of operation, but the testing of the system as well. The records of any test must be maintained until the time of the next test and then for 1 year after that test. In addition, if the system transmits signals to an off-site monitoring facility, the records of all signals, tests, and operations must be maintained for not less than 1 year.

7.7.1.4 Required documents regarding system design and function shall be maintained for the life of the system.

The as-built drawings, system calculations, system operational matrix, and record of completion are among the original system documents that must be retained for the life of the system.

7.7.1.5 The emergency communications system and fire alarm system as-built plans and other related documentation shall be permitted to be maintained together, including the appearance of both systems on the same drawings. (SIG-ECS)

7.7.1.6 Revisions and alterations to systems shall be recorded and records maintained with the original system design documents.

7.7.2 Document Accessibility. (SIG-FUN)

Subsection 7.7.2 addresses the storage requirements for the record of completion and other documentation required to be maintained for the system.

An up-to-date copy of the record of completion form must be stored at, but not within, the control unit or other approved location to make sure persons servicing the system have the latest information about the system. Also refer to the requirements for record keeping in Section 14.6. Exhibit 7.3 shows an example of an as-built drawing document cabinet.

All required documentation must be stored in a separate enclosure or cabinet that is prominently labeled SYSTEM RECORD DOCUMENTS. See Exhibit 7.4. There is no specific color needed for this enclosure or cabinet. Paragraph 7.7.2.4 requires that if the record of completion and other necessary documentation are not located next to the system control unit, the cabinet location must be identified at the control unit to allow retrieval of the documents.

Where documentation is stored electronically, a means to read the electronic format must be available. When technology changes, it is the owner's responsibility to make sure that the electronic media can still be viewed or to update the files to be compatible with current technology.

Where both a fire alarm system and an ECS are installed, the documentation for both systems is permitted to be stored at a single location because the two systems are often interconnected with each other. Storage of the record of completion for some ECSs could require a more secure storage location. See 7.7.3.

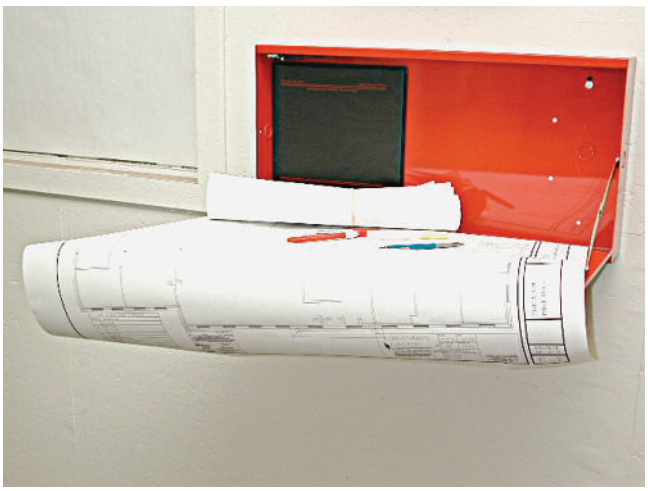

EXHIBIT 7.3

Documentation Cabinet. (Source: Space Age Electronics, Inc., Sterling, MA)

EXHIBIT 7.4

System Record Document Cabinet. (Source: Space Age Electronics, Inc., Sterling, MA)

7.7.2.1 With every new system, a documentation cabinet shall be installed at the system control unit or at another approved location at the protected premises.

7.7.2.2 The documentation cabinet shall be sized so that it can contain all necessary documentation.

7.7.2.3* All record documentation shall be stored in the documentation cabinet. No record documentation shall be stored in the control unit.

Δ **A.7.7.2.3** The intent is that paper and/or electronic documents should not be stored inside the control unit because control units are not typically approved for the storage of combustible material.

Examples of system documents include the following:

(1) Record drawings (as-builts)
(2) Equipment technical data sheets
(3) Alternative means and methods, variances, appeals, approvals, and so forth
(4) Performance-based design documentation in accordance with 7.3.7
(5) Risk analysis documentation in accordance with 7.3.6
(6) Emergency response plan in accordance with 7.3.8
(7) Evaluation documentation in accordance with 7.3.9
(8) Software and firmware control documentation in accordance with 23.2.2

7.7.2.4 Where the documentation cabinet is not in the same location as the system control unit, its location shall be identified at the system control unit.

7.7.2.5 The documentation cabinet shall be prominently labeled SYSTEM RECORD DOCUMENTS.

7.7.2.6* The building owner or the building owner's representative shall, on an annual basis, review any electronic documentation media formats and associated interfacing hardware for compatibility and update, if necessary.

A.7.7.2.6 Documentation stored in electronic media can become obsolete, for example, 5.25 in. and 3.5 in. disks and tape drives are not supported by current technology. Updating the stored media to current technology concerns the programs used to operate them, and the computer or hardware used to interface to the system installed. Thus, it is necessary to ensure that all components are still compatible with the installed system.

7.7.2.7 The contents of the cabinet shall be accessible by authorized personnel only.

7.7.2.8 Emergency communications system and fire alarm system record documentation shall be permitted to be maintained together in the same documentation cabinet.

7.7.3 Document Security. (SIG-ECS)

7.7.3.1 Security for system's documentation shall be determined by the stakeholders.

7.7.3.2* Where such documents cannot be protected from public access, it shall be permitted to remove sensitive information from record documents provided the owner retains complete documentation that will be made accessible to the authority having jurisdiction at an owner designated location.

A.7.7.3.2 It is recognized that there are circumstances in which the security and protection of some system documents will require measures other than that prescribed in this Code. Since a common expectation of a mass notification system is to function during security and/or terrorist events, it could be crucial that system design be protected.

Where such conditions have been identified, the stakeholders should clearly identify what and how system documents should be maintained to satisfy the integrity of this section regarding reviews, future service, modifications, and system support.

Due to freedom of information laws allowing for public access to documents submitted to and retained by code officials, it could be necessary for secure documents to be reviewed by code officials at alternate locations. Such conditions should be identified by the stakeholders and discussed with the authorities having jurisdiction(s) in advance.

7.8 Forms.

7.8.1 General.

7.8.1.1* The requirements of Section 7.8 shall apply only where required by other governing laws, codes, or standards; by other parts of this Code; or by project specifications or drawings. (SIG-FUN)

A.7.8.1.1 See Section 7.2 for the minimum documentation requirements.

7.8.1.2 Where specific forms are required by other governing laws, codes, or standards; by other parts of this Code; or by project specifications or drawings, form layouts and content that differ from those in Section 7.8 shall be permitted provided that the minimum required content is included. (SIG-FUN)

7.8.2 Forms for Documentation. Forms for documentation shall be as follows:

NFPA 720

(1)* Unless otherwise permitted or required in 7.5.6 or 7.8.1.2, Figure 7.8.2(a) through Figure 7.8.2(f) shall be used to document the record of completion and inspection. (SIG-FUN)

Forms to satisfy the record-keeping requirements have been developed for use. The use of forms other than those in this Code are permitted, provided the required documented information is included in the alternate form.

(2)* Unless otherwise permitted or required in 7.6.6 or 7.8.1.2, Figure 7.8.2(g) through Figure 7.8.2(l) shall be used to document the record of inspection and testing. (SIG-TMS)

(3) Where a form is required by the AHJ to document the installation and inspection of a household fire alarm system or single- or multiple-station alarms, Figure 7.8.2(m) can be used to document the record of completion and inspection.

Before the 2019 edition, Figure 7.8.2(m) had been in Annex A material for Chapter 29. The form was moved to Chapter 7 to allow it to be enforceable by the authority having jurisdiction and to gather all forms in a single chapter.

A.7.8.2(1) Examples of completed record of completion forms are shown in Figure A.7.8.2(1)(a) through Figure A.7.8.2(1)(f).

Exhibits 7.5 through 7.11 provide examples of completed inspection and testing forms.

A.7.8.2(2) Figure 7.8.2(g) through Figure 7.8.2(l) are sample forms intended to reflect the general information that should be provided as part of a system inspection and test report, but they are not intended to mandate a specific format for the report. A report format customized to the specific system configuration, devices, appliances, and system functions being tested meets the intent of the requirement.

SYSTEM RECORD OF COMPLETION

This form is to be completed by the system installation contractor at the time of system acceptance and approval.
It shall be permitted to modify this form as needed to provide a more complete and/or clear record.
Insert N/A in all unused lines.
Attach additional sheets, data, or calculations as necessary to provide a complete record.

Form Completion Date: _____ Supplemental Pages Attached: _____

1. PROPERTY INFORMATION

Name of property: _____
Address: _____
Description of property: _____
Name of property representative: _____
Address: _____
Phone: _____ Fax: _____ E-mail: _____

2. INSTALLATION, SERVICE, TESTING, AND MONITORING INFORMATION

Installation contractor: _____
Address: _____
Phone: _____ Fax: _____ E-mail: _____
Service organization: _____
Address: _____
Phone: _____ Fax: _____ E-mail: _____
Testing organization: _____
Address: _____
Phone: _____ Fax: _____ E-mail: _____
Effective date for test and inspection contract: _____
Monitoring organization: _____
Address: _____
Phone: _____ Fax: _____ E-mail: _____
Account number: _____ Phone line 1: _____ Phone line 2: _____
Means of transmission: _____
Entity to which alarms are retransmitted: _____ Phone: _____

3. DOCUMENTATION

On-site location of the required record documents and site-specific software: _____

4. DESCRIPTION OF SYSTEM OR SERVICE

This is a: ❑ New system ❑ Modification to existing system Permit number: _____
NFPA 72 edition: _____

4.1 Control Unit

Manufacturer: _____ Model number: _____

4.2 Software and Firmware

Firmware revision number: _____

4.3 Alarm Verification

❑ This system does not incorporate alarm verification.
Number of devices subject to alarm verification: _____ Alarm verification set for _____ seconds

© 2018 National Fire Protection Association NFPA 72 (p. 1 of 3)

Δ ***FIGURE 7.8.2(a)*** *System Record of Completion. (SIG-FUN)*

NFPA 720

SYSTEM RECORD OF COMPLETION

This form is to be completed by the system installation contractor at the time of system acceptance and approval.
It shall be permitted to modify this form as needed to provide a more complete and/or clear record.
Insert N/A in all unused lines.
Attach additional sheets, data, or calculations as necessary to provide a complete record.

Form Completion Date: 2 November 2019 Supplemental Pages Attached: 0

1. PROPERTY INFORMATION

Name of property: World Storage and Transfer Headquarters
Address: 27132 Santa Anita Boulevard, Hilo, HI
Description of property: Business and Office Building
Name of property representative: Joe Bago Donits
Address: As above
Phone: (743) 225-9768 Fax: (743) 225-9768 E-mail: jbago@WLST.net

2. INSTALLATION, SERVICE, TESTING, AND MONITORING INFORMATION

Installation contractor: Sparkee's Electric
Address: 1954 Nimitz Highway, Honolulu, HI 76542
Phone: (978) 456-9876 Fax: (978) 456-9876 E-mail: shortcircuitguy@sparkee.net
Service organization: None
Address:
Phone: Fax: E-mail:
Testing organization: Jim's Protection, Inc.
Address: 2300 Daly Boulevard, Austin, TX
Phone: (407) 738-4587 Fax: (407) 738-4598 E-mail: testerjim@JPI.com
Effective date for test and inspection contract: 25 January 2011
Monitoring organization: Look the Other Way, Inc.
Address: 995 Highway 35W, Minneapolis, MN
Phone: (412) 456-9078 Fax: (412) 456-7272 E-mail: Look@otherway.com
Account number: 56734598 Phone line 1: (212) 978-6576 Phone line 2: (212) 978-9978
Means of transmission: IP
Entity to which alarms are retransmitted: Honolulu FD Phone: (808) 455-5555

3. DOCUMENTATION

On-site location of the required record documents and site-specific software: Building Mgrs. Office Room 203

4. DESCRIPTION OF SYSTEM OR SERVICE

This is a: ☑ New system ❑ Modification to existing system Permit number: 11-907645
NFPA 72 edition: 2019

4.1 Control Unit

Manufacturer: Halter Cabinet Model number: 1019-7647

4.2 Software and Firmware

Firmware revision number: 7.0 B Executive Rev 9.11

4.3 Alarm Verification

☑ This system does not incorporate alarm verification.
Number of devices subject to alarm verification: _____ Alarm verification set for _____ seconds

© 2018 National Fire Protection Association NFPA 72 (p. 1 of 3)

Δ ***FIGURE A.7.8.2(1)(a)*** *Example of Completed System Record of Completion.*

SYSTEM RECORD OF COMPLETION *(continued)*

5. SYSTEM POWER

5.1 Control Unit

5.1.1 Primary Power

Input voltage of control panel: _____ Control panel amps: _____

Overcurrent protection: Type: _____ Amps: _____

Branch circuit disconnecting means location: _____ Number: _____

5.1.2 Secondary Power

Type of secondary power: _____

Location, if remote from the plant: _____

Calculated capacity of secondary power to drive the system:

In standby mode (hours): _____ In alarm mode (minutes): _____

5.2 Control Unit

❏ This system does not have power extender panels

❏ Power extender panels are listed on supplementary sheet A

6. CIRCUITS AND PATHWAYS

Pathway Type	Dual Media Pathway	Separate Pathway	Class	Survivability Level
Signaling Line				
Device Power				
Initiating Device				
Notification Appliance				
Other (specify):				

7. REMOTE ANNUNCIATORS

Type	Location

8. INITIATING DEVICES

Type	Quantity	Addressable or Conventional	Alarm or Supervisory	Sensing Technology
Manual Pull Stations				
Smoke Detectors				
Duct Smoke Detectors				
Heat Detectors				
Gas Detectors				
Carbon Monoxide Detectors				
Waterflow Switches				
Tamper Switches				

© 2018 National Fire Protection Association NFPA 72 (p. 2 of 3)

Δ ***FIGURE 7.8.2(a)*** *Continued*

SYSTEM RECORD OF COMPLETION *(continued)*

5. SYSTEM POWER

5.1 Control Unit

5.1.1 Primary Power

Input voltage of control panel: 120 VAC

Control panel amps: 7.3 Amps

Overcurrent protection: Type: Breaker

Amps: 20 Amps

Branch circuit disconnecting means location: Breaker Panel — Room B-23

Number: 23

5.1.2 Secondary Power

Type of secondary power: Battery

Location, if remote from the plant: Rear Yard

Calculated capacity of secondary power to drive the system:

In standby mode (hours): 24

In alarm mode (minutes): 15

5.2 Control Unit

❏ This system does not have power extender panels

❏ Power extender panels are listed on supplementary sheet A

6. CIRCUITS AND PATHWAYS

Pathway Type	Dual Media Pathway	Separate Pathway	Class	Survivability Level
Signaling Line		X	A	1
Device Power				
Initiating Device		X	B	1
Notification Appliance		X	B	1
Other (specify):				

7. REMOTE ANNUNCIATORS

Type	Location
Tabular	Front Lobby

8. INITIATING DEVICES

Type	Quantity	Addressable or Conventional	Alarm or Supervisory	Sensing Technology
Manual Pull Stations	12	Addressable	Alarm	
Smoke Detectors	8	Addressable	Alarm	Photoelectric
Duct Smoke Detectors				
Heat Detectors				
Gas Detectors	1	Conventional	Supervisory	
Carbon Monoxide Detectors				
Waterflow Switches	2	Conventional	Alarm	
Tamper Switches	4	Conventional	Supervisory	

© 2018 National Fire Protection Association

NFPA 72 (p. 2 of 3)

Δ ***FIGURE A.7.8.2(1)(a)*** *Continued*

SYSTEM RECORD OF COMPLETION *(continued)*

9. NOTIFICATION APPLIANCES

Type	Quantity	Description
Audible		
Visual		
Combination Audible and Visual		

10. SYSTEM CONTROL FUNCTIONS

Type	Quantity
Hold-Open Door Releasing Devices	
HVAC Shutdown	
Fire/Smoke Dampers	
Door Unlocking	
Elevator Recall	
Elevator Shunt Trip	

11. INTERCONNECTED SYSTEMS

❏ This system does not have interconnected systems.

❏ Interconnected systems are listed on supplementary sheet _____.

12. CERTIFICATION AND APPROVALS

12.1 System Installation Contractor

This system as specified herein has been installed according to all NFPA standards cited herein.

Signed: _____ Printed name: _____ Date: _____

Organization: _____ Title: _____ Phone: _____

12.2 System Operational Test

This system as specified herein has tested according to all NFPA standards cited herein.

Signed: _____ Printed name: _____ Date: _____

Organization: _____ Title: _____ Phone: _____

12.3 Acceptance Test

Date and time of acceptance test: _____

Installing contractor representative: _____

Testing contractor representative: _____

Property representative: _____

AHJ representative: _____

© 2018 National Fire Protection Association NFPA 72 (p. 3 of 3)

Δ ***FIGURE 7.8.2(a)*** *Continued*

SYSTEM RECORD OF COMPLETION *(continued)*

9. NOTIFICATION APPLIANCES

Type	Quantity	Description
Audible	18	
Visual	24	
Combination Audible and Visual	6	

10. SYSTEM CONTROL FUNCTIONS

Type	Quantity
Hold-Open Door Releasing Devices	4
HVAC Shutdown	2
Fire/Smoke Dampers	
Door Unlocking	1
Elevator Recall	2
Elevator Shunt Trip	

11. INTERCONNECTED SYSTEMS

❏ This system does not have interconnected systems.

❏ Interconnected systems are listed on supplementary sheet _____ .

12. CERTIFICATION AND APPROVALS

12.1 System Installation Contractor

This system as specified herein has been installed according to all NFPA standards cited herein.

Signed: *Harry Johnson* Printed name: Harry Johnson Date: 11 November 2019

Organization: Sparkee's Electric Title: Principal Phone: (978) 456-9876

12.2 System Operational Test

This system as specified herein has tested according to all NFPA standards cited herein.

Signed: *Jim Riverbottom* Printed name: Jim Riverbottom Date: 14 January 2011

Organization: Jim's Protection, Inc. Title: President Phone: (407) 738-4583

12.3 Acceptance Test

Date and time of acceptance test: 0830 hrs. — 18 November 2019

Installing contractor representative: Jim Johnson

Testing contractor representative: Reginald O'Haraquest

Property representative: Danny MacIntosh

AHJ representative: Inspector DiDonato

© 2018 National Fire Protection Association NFPA 72 (p. 3 of 3)

Δ ***FIGURE A.7.8.2(1)(a)*** *Continued*

EMERGENCY COMMUNICATIONS SYSTEMS SUPPLEMENTARY RECORD OF COMPLETION

This form is a supplement to the System Record of Completion. It includes systems and components specific to emergency communications systems.
This form is to be completed by the system installation contractor at the time of system acceptance and approval.
It shall be permitted to modify this form as needed to provide a more complete and/or clear record.
Insert N/A in all unused lines.

Form Completion Date: _____ Number of Supplemental Pages Attached: _____

1. PROPERTY INFORMATION

Name of property: _____

Address: _____

2. DESCRIPTION OF SYSTEM OR SERVICE

❑ Fire alarm with in-building fire emergency voice alarm communication system (EVAC)

❑ Mass notification system

❑ Combination system, with the following components:

❑ Fire alarm ❑ EVACS ❑ MNS ❑ Two-way, in-building, emergency communications system

❑ Other (specify): _____

NFPA 72 edition: _____ Additional description of system(s): _____

_____

2.1 In-Building Fire Emergency Voice Alarm Communications System

Manufacturer: _____ Model number: _____

Number of single voice alarm channels: _____ Number of multiple voice alarm channels: _____

Number of loudspeakers: _____ Number of loudspeaker circuits: _____

Location of amplification and sound processing equipment: _____

_____

_____

Location of paging microphone stations:

Location 1: _____

Location 2: _____

Location 3: _____

2.2 Mass Notification System

2.2.1 System Type:

❑ In-building MNS–combination

❑ In-building MNS ❑ Wide-area MNS ❑ Distributed recipient MNS

❑ Other (specify): _____

© 2018 National Fire Protection Association NFPA 72 (p. 1 of 3)

Δ ***FIGURE 7.8.2(b)*** *Emergency Communications System Supplementary Record of Completion. (SIG-FUN)*

EMERGENCY COMMUNICATIONS SYSTEMS SUPPLEMENTARY RECORD OF COMPLETION

This form is a supplement to the System Record of Completion. It includes systems and components specific to emergency communications systems.
This form is to be completed by the system installation contractor at the time of system acceptance and approval.
It shall be permitted to modify this form as needed to provide a more complete and/or clear record.
Insert N/A in all unused lines.

Form Completion Date: 2 November 2019 Number of Supplemental Pages Attached: _____

1. PROPERTY INFORMATION

Name of property: World Storage and Transfer Headquarters

Address: 27132 Santa Anita Boulevard, Hilo, HI

2. DESCRIPTION OF SYSTEM OR SERVICE

❑ Fire alarm with in-building fire emergency voice alarm communication system (EVAC)

❑ Mass notification system

☑ Combination system, with the following components:

❑ Fire alarm ❑ EVACS ☒ MNS ❑ Two-way, in-building, emergency communications system

❑ Other (specify): _____

NFPA 72 edition: 2019 Additional description of system(s): _____

2.1 In-Building Fire Emergency Voice Alarm Communications System

Manufacturer: Halter Cabinet Model number: 1018-7648

Number of single voice alarm channels: 2 Number of multiple voice alarm channels: 0

Number of loudspeakers: 99 Number of loudspeaker circuits: 12

Location of amplification and sound processing equipment: Fire Control Room

Location of paging microphone stations:

Location 1: Fire Control Room

Location 2: Security Office

Location 3: _____

2.2 Mass Notification System

2.2.1 System Type:

☑ In-building MNS–combination

❑ In-building MNS ❑ Wide-area MNS ❑ Distributed recipient MNS

❑ Other (specify): _____

© 2018 National Fire Protection Association NFPA 72 (p. 1 of 3)

Δ ***FIGURE A.7.8.2(1)(b)*** *Example of Completed Emergency Communications System Supplementary Record of Completion.*

EMERGENCY COMMUNICATIONS SYSTEMS SUPPLEMENTARY RECORD OF COMPLETION *(continued)*

2. DESCRIPTION OF SYSTEM OR SERVICE *(continued)*

2.2.2 System Features:

❑ Combination fire alarm/MNS ❑ MNS autonomous control unit ❑ Wide-area MNS to regional national alerting interface
❑ Local operating console (LOC) ❑ Distributed-recipient MNS (DRMNS) ❑ Wide-area MNS to DRMNS interface
❑ Wide-area MNS to high power loudspeaker array (HPLA) interface ❑ In-building MNS to wide-area MNS interface
❑ Other (specify): _____

2.2.3 MNS Local Operating Consoles

Location 1: _____
Location 2: _____
Location 3: _____

2.2.4 High Power Loudspeaker Arrays

Number of HPLA loudspeaker initiation zones: _____
Location 1: _____
Location 2: _____
Location 3: _____

2.2.5 Mass Notification Devices

Combination fire alarm/MNS visual devices: _____ MNS-only visual devices: _____
Textual signs: _____ Other (describe): _____
Supervision class: _____

2.2.6 Special Hazard Notification

❑ This system does not have special suppression predischarge notification.
❑ MNS systems DO NOT override notification appliances required to provide special suppression predischarge notification.

3. TWO-WAY EMERGENCY COMMUNICATIONS SYSTEMS

3.1 Telephone System

Number of telephone jacks installed: _____ Number of warden stations installed: _____
Number of telephone handsets stored on site: _____
Type of telephone system installed: ❑ Electrically powered ❑ Sound powered

3.2 Area of Refuge (Area of Rescue Assistance) Emergency Communications Systems

Number of stations: _____ Location of central control point: _____
Days and hours when central control point is attended: _____
Location of alternate control point: _____
Days and hours when alternate control point is attended: _____

© 2018 National Fire Protection Association NFPA 72 (p. 2 of 3)

Δ ***FIGURE 7.8.2(b)*** *Continued*

EMERGENCY COMMUNICATIONS SYSTEMS SUPPLEMENTARY RECORD OF COMPLETION *(continued)*

2. DESCRIPTION OF SYSTEM OR SERVICE *(continued)*

2.2.2 System Features:

☑ Combination fire alarm/MNS ❑ MNS autonomous control unit ❑ Wide-area MNS to regional national alerting interface
❑ Local operating console (LOC) ❑ Distributed-recipient MNS (DRMNS) ❑ Wide-area MNS to DRMNS interface
❑ Wide-area MNS to high power loudspeaker array (HPLA) interface ❑ In-building MNS to wide-area MNS interface
❑ Other (specify): _____

2.2.3 MNS Local Operating Consoles

Location 1: Fire Control Room
Location 2: Security Office
Location 3: _____

2.2.4 High-Power Loudspeaker Arrays

Number of HPLA loudspeaker initiation zones: 0
Location 1: _____
Location 2: _____
Location 3: _____

2.2.5 Mass Notification Devices

Combination fire alarm/MNS visual devices: 48 MNS-only visual devices: _____
Textual signs: _____ Other (describe): _____
Supervision class: _____

2.2.6 Special Hazard Notification

☑ This system does not have special suppression predischarge notification.
❑ MNS systems DO NOT override notification appliances required to provide special suppression predischarge notification.

3. TWO-WAY EMERGENCY COMMUNICATIONS SYSTEMS

3.1 Telephone System

Number of telephone jacks installed: 15 Number of warden stations installed: 3
Number of telephone handsets stored on site: 6
Type of telephone system installed: ❑ Electrically powered ☑ Sound powered

3.2 Area of Refuge (Area of Rescue Assistance) Emergency Communications Systems

Number of stations: 0 Location of central control point: _____
Days and hours when central control point is attended: _____
Location of alternate control point: _____
Days and hours when alternate control point is attended: _____

© 2018 National Fire Protection Association NFPA 72 (p. 2 of 3)

Δ ***FIGURE A.7.8.2(1)(b)*** *Continued*

EMERGENCY COMMUNICATIONS SYSTEMS SUPPLEMENTARY RECORD OF COMPLETION *(continued)*

3. TWO-WAY EMERGENCY COMMUNICATIONS SYSTEMS *(continued)*

3.3 Elevator Emergency Communications Systems

Number of elevators with stations: _____ Location of central control point: _____

Days and hours when central control point is attended: _____

Location of alternate control point: _____

Days and hours when alternate control point is attended: _____

3.4 Other Two-Way Communications System

Describe: _____

4. CONTROL FUNCTIONS

This system activates the following control functions specific to emergency communications systems:

Type	Quantity
Mass Notification Override of Alarm Signaling Systems or Appliances	

See Main System Record of Completion for additional information, certifications, and approvals.

© 2018 National Fire Protection Association NFPA 72 (p. 3 of 3)

Δ ***FIGURE 7.8.2(b)*** *Continued*

EMERGENCY COMMUNICATIONS SYSTEMS SUPPLEMENTARY RECORD OF COMPLETION *(continued)*

3. TWO-WAY EMERGENCY COMMUNICATIONS SYSTEMS *(continued)*

3.3 Elevator Emergency Communications Systems

Number of elevators with stations: 2 Location of central control point: Fire Control Room

Days and hours when central control point is attended: 24

Location of alternate control point: None

Days and hours when alternate control point is attended: None

3.4 Other Two-Way Communications System

Describe: _____

4. CONTROL FUNCTIONS

This system actuates the following control functions specific to emergency communications systems:

Type	Quantity
Mass Notification Override of Alarm Signaling Systems or Appliances	1

See Main System Record of Completion for additional information, certifications, and approvals.

© 2018 National Fire Protection Association NFPA 72 (p. 3 of 3)

Δ ***FIGURE A.7.8.2(1)(b)*** *Continued*

POWER SYSTEMS
SUPPLEMENTARY RECORD OF COMPLETION

This form is a supplement to the System Record of Completion. It includes systems and components specific to power systems that incorporate generators, ESS systems, remote battery systems, or other complex power systems. This form is to be completed by the system installation contractor at the time of system acceptance and approval. It shall be permitted to modify this form as needed to provide a more complete and/or clear record. Insert N/A in all unused lines.

Form Completion Date: _____ Number of Supplemental Pages Attached: _____

1. PROPERTY INFORMATION

Name of property: _____

Address: _____

2. SYSTEM POWER

2.1 Control Unit

2.1.1 Primary Power

Input voltage of control panel: _____ Control panel amps: _____

Overcurrent protection: Type: _____ Amps: _____

Location (of primary supply panelboard): _____

Disconnecting means location: _____

2.1.2 Engine-Driven Generator

Location of generator: _____

Location of fuel storage: _____ Type of fuel: _____

2.1.3 Energy Storage Systems

Equipment powered by ESS system: _____

Location of ESS system: _____

Calculated capacity of ESS batteries to drive the system components connected to it:

In standby mode (hours): _____ In alarm mode (minutes): _____

2.1.4 Batteries

Location: _____ Type: _____ Nominal voltage: _____ Amp/hour rating: _____

Calculated capacity of batteries to drive the system:

In standby mode (hours): _____ In alarm mode (minutes): _____

2.2 In-Building Fire Emergency Voice Alarm Communications System or Mass Notification System

2.2.1 Primary Power

Input voltage of EVACS or MNS panel: _____ EVACS or MNS panel amps: _____

Overcurrent protection: Type: _____ Amps: _____

Location (of primary supply panelboard): _____

Disconnecting means location: _____

© 2018 National Fire Protection Association NFPA 72 (p. 1 of 3)

Δ ***FIGURE 7.8.2(c)*** *Power Systems Supplementary Record of Completion. (SIG-FUN)*

POWER SYSTEMS
SUPPLEMENTARY RECORD OF COMPLETION

This form is a supplement to the System Record of Completion. It includes systems and components specific to power systems that incorporate generators, ESS systems, remote battery systems, or other complex power systems. This form is to be completed by the system installation contractor at the time of system acceptance and approval. It shall be permitted to modify this form as needed to provide a more complete and/or clear record. Insert N/A in all unused lines.

Form Completion Date: 2 November 2019 Number of Supplemental Pages Attached: 0

1. PROPERTY INFORMATION

Name of property: World Storage and Transfer Headquarters

Address: 27132 Santa Anita Boulevard, Hilo, HI

2. SYSTEM POWER

2.1 Control Unit

2.1.1 Primary Power

Input voltage of control panel: 120 volt Control panel amps: 7.3

Overcurrent protection: Type: Circuit Breaker Amps: 20

Location (of primary supply panelboard): Main Electrical Room in Basement

Disconnecting means location: Panel E2 — Electric Room

2.1.2 Engine-Driven Generator

Location of generator: _____

Location of fuel storage: _____ Type of fuel: Diesel

2.1.3 Energy Storage Systems

Equipment powered by ESS system: None

Location of ESS system: _____

Calculated capacity of ESS batteries to drive the system components connected to it:

In standby mode (hours): _____ In alarm mode (minutes): _____

2.1.4 Batteries

Location: FACU Type: Gel Cell Nominal voltage: 24 Amp/hour rating: 16

Calculated capacity of batteries to drive the system:

In standby mode (hours): 24 In alarm mode (minutes): 15

2.2 In-Building Fire Emergency Voice Alarm Communications System or Mass Notification System

2.2.1 Primary Power

Input voltage of EVACS or MNS panel: 120 volt EVACS or MNS panel amps: 8.8

Overcurrent protection: Type: Circuit Breaker Amps: 20

Location (of primary supply panelboard): Main Electrical Room in Basement

Disconnecting means location: Panel E2 — Electric Room

© 2018 National Fire Protection Association NFPA 72 (p. 1 of 3)

Δ ***FIGURE A.7.8.2(1)(c)*** *Example of Completed Power Systems Supplementary Record of Completion.*

POWER SYSTEMS
SUPPLEMENTARY RECORD OF COMPLETION *(continued)*

2. SYSTEM POWER *(continued)*

2.2.2 Engine-Driven Generator

Location of generator: _____

Location of fuel storage: _____ Type of fuel: _____

2.2.3 Energy Storage Systems

Equipment powered by ESS system: _____

Location of ESS system: _____

Calculated capacity of ESS batteries to drive the system components connected to it:

In standby mode (hours): _____ In alarm mode (minutes): _____

2.2.4 Batteries

Location: _____ Type: _____ Nominal voltage: _____ Amp/hour rating: _____

Calculated capacity of batteries to drive the system:

In standby mode (hours): _____ In alarm mode (minutes): _____

2.3 Notification Appliance Power Extender Panels

❏ This system does not have power extender panels.

2.3.1 Primary Power

Input voltage of power extender panel(s): _____ Power extender panel amps: _____

Overcurrent protection: Type: _____ Amps: _____

Location (of primary supply panelboard): _____

Disconnecting means location: _____

2.3.2 Engine Driven Generator

Location of generator: _____

Location of fuel storage: _____ Type of fuel: _____

2.3.3 Energy Storage Systems

Equipment powered by ESS system: _____

Location of ESS system: _____

Calculated capacity of ESS batteries to drive the system components connected to it:

In standby mode (hours): _____ In alarm mode (minutes): _____

2.3.4 Batteries

Location: _____ Type: _____ Nominal voltage: _____ Amp/hour rating: _____

Calculated capacity of batteries to drive the system:

In standby mode (hours): _____ In alarm mode (minutes): _____

© 2018 National Fire Protection Association NFPA 72 (p. 2 of 3)

Δ ***FIGURE 7.8.2(c)*** *Continued*

POWER SYSTEMS
SUPPLEMENTARY RECORD OF COMPLETION *(continued)*

2. SYSTEM POWER *(continued)*

2.2.2 Engine-Driven Generator

Location of generator: _____

Location of fuel storage: _____ Type of fuel: Diesel

2.2.3 Energy Storage Systems

Equipment powered by ESS system: None

Location of ESS system: N/A

Calculated capacity of ESS batteries to drive the system components connected to it:

In standby mode (hours): N/A In alarm mode (minutes): N/A

2.2.4 Batteries

Location: ECS Panel Type: Gel Cell Nominal voltage: 24 Amp/hour rating: 20

Calculated capacity of batteries to drive the system:

In standby mode (hours): 24 In alarm mode (minutes): 15

2.3 Notification Appliance Power Extender Panels

❏ This system does not have power extender panels.

2.3.1 Primary Power

Input voltage of power extender panel(s): 120 volt Power extender panel amps: 8

Overcurrent protection: Type: Circuit Breaker Amps: 20

Location (of primary supply panelboard): See Table

Disconnecting means location: _____

2.3.2 Engine-Driven Generator

Location of generator: _____

Location of fuel storage: _____ Type of fuel: Diesel

2.3.3 Energy Storage Systems

Equipment powered by ESS system: None

Location of ESS system: _____

Calculated capacity of ESS batteries to drive the system components connected to it:

In standby mode (hours): _____ In alarm mode (minutes): _____

2.3.4 Batteries

Location: Power Panel Type: Gel Cell Nominal voltage: 24 Amp/hour rating: 12

Calculated capacity of batteries to drive the system:

In standby mode (hours): 24 In alarm mode (minutes): 15

See Main System Record of Completion for additional information, certifications, and approvals.

© 2018 National Fire Protection Association NFPA 72 (p. 2 of 3)

Δ ***FIGURE A.7.8.2(1)(c)*** *Continued*

POWER SYSTEMS
SUPPLEMENTARY RECORD OF COMPLETION ***(continued)***

2. SYSTEM POWER ***(continued)***

2.4 Supervising Station Transmission Equipment

❑ This system does not use transmission equipment within the building powered by any other source than the alarm system control unit.

2.4.1 Primary Power

Input voltage of shared transmission equipment: _____

Shared transmission equipment panel amps: _____

Overcurrent protection: Type: _____ Amps: _____

Location (of primary supply panelboard): _____

Disconnecting means location: _____

2.4.2 Engine Driven Generator

Location of generator: _____

Location of fuel storage: _____ Type of fuel: _____

2.4.3 Energy Storage Systems

Equipment powered by ESS system: _____

Calculated capacity of ESS batteries to drive the system components connected to it:

In standby mode (hours): _____ In alarm mode (minutes): _____

2.4.4 Batteries

Location: _____ Type: _____ Nominal voltage: _____ Amp/hour rating: _____

Calculated capacity of batteries to drive the system:

In standby mode (hours): _____ In alarm mode (minutes): _____

See Main System Record of Completion for additional information, certifications, and approvals.

© 2018 National Fire Protection Association NFPA 72 (p. 3 of 3)

Δ ***FIGURE 7.8.2(c)*** *Continued*

POWER SYSTEMS
SUPPLEMENTARY RECORD OF COMPLETION *(continued)*

2. SYSTEM POWER *(continued)*

2.4 Supervising Station Transmission Equipment

☒ This system does not use transmission equipment within the building powered by any other source than the alarm system control unit.

2.4.1 Primary Power

Input voltage of shared transmission equipment: 120 VAC

Shared transmission equipment panel amps: 73 amps

Overcurrent protection: Type: Breaker Amps: 20 amps

Location (of primary supply panelboard): Breaker Panel B-23

Disconnecting means location: Electric Room

2.4.2 Engine Driven Generator

Location of generator: _____

Location of fuel storage: _____ Type of fuel: _____

2.4.3 Energy Storage Systems

Equipment powered by ESS system: _____

Calculated capacity of ESS batteries to drive the system components connected to it:

In standby mode (hours): _____ In alarm mode (minutes): _____

2.4.4 Batteries

Location: FACU Type: Gel Nominal voltage: 12 Amp/hour rating: 16

Calculated capacity of batteries to drive the system:

In standby mode (hours): 24 In alarm mode (minutes): 15

See Main System Record of Completion for additional information, certifications, and approvals.

© 2018 National Fire Protection Association NFPA 72 (p. 3 of 3)

Δ ***FIGURE A.7.8.2(1)(c)*** *Continued*

NOTIFICATION APPLIANCE POWER PANEL SUPPLEMENTARY RECORD OF COMPLETION

This form is a supplement to the System Record of Completion. It includes a list of types and locations of notification appliance power extender panels.
This form is to be completed by the system installation contractor at the time of system acceptance and approval.
It shall be permitted to modify this form as needed to provide a more complete and/or clear record.
Insert N/A in all unused lines.

Form Completion Date: _____ Number of Supplemental Pages Attached: _____

1. PROPERTY INFORMATION

Name of property: _____

Address: _____

2. NOTIFICATION APPLIANCE POWER EXTENDER PANELS

Make and Model	Location	Area Served	Power Source

See Main System Record of Completion for additional information, certifications, and approvals.

© 2018 National Fire Protection Association NFPA 72

Δ ***FIGURE 7.8.2(d)*** *Notification Appliance Power Panel Supplementary Record of Completion. (SIG-FUN)*

NOTIFICATION APPLIANCE POWER PANEL SUPPLEMENTARY RECORD OF COMPLETION

This form is a supplement to the System Record of Completion. It includes a list of types and locations of notification appliance power extender panels.
This form is to be completed by the system installation contractor at the time of system acceptance and approval.
It shall be permitted to modify this form as needed to provide a more complete and/or clear record.
Insert N/A in all unused lines.

Form Completion Date: 2 November 2019 Number of Supplemental Pages Attached: 0

1. PROPERTY INFORMATION

Name of property: World Storage and Transfer Headquarters

Address: 27132 Santa Anita Boulevard, Hilo, HI

2. NOTIFICATION APPLIANCE POWER EXTENDER PANELS

Make and Model	Location	Area Served	Power Source
Firelite W123	3rd Floor	3rd Floor	Panel 3E
SK + ABC	6th Floor	6th Floor	Panel 3G

See Main System Record of Completion for additional information, certifications, and approvals.

© 2018 National Fire Protection Association NFPA 72

Δ ***FIGURE A.7.8.2(1)(d)*** *Example of Completed Notification Appliance Power Panel Supplementary Record of Completion.*

INTERCONNECTED SYSTEMS
SUPPLEMENTARY RECORD OF COMPLETION

This form is a supplement to the System Record of Completion. It includes a list of types and locations of systems that are interconnected to the main system.
This form is to be completed by the system installation contractor at the time of system acceptance and approval.
It shall be permitted to modify this form as needed to provide a more complete and/or clear record.
Insert N/A in all unused lines.

Form Completion Date: _____ Number of Supplemental Pages Attached: _____

1. PROPERTY INFORMATION

Name of property: _____

Address: _____

2. INTERCONNECTED SYSTEMS

Description	Location	Purpose

See Main System Record of Completion for additional information, certifications, and approvals.

© 2018 National Fire Protection Association NFPA 72

Δ ***FIGURE 7.8.2(e)*** *Interconnected Systems Supplementary Record of Completion. (SIG-FUN)*

INTERCONNECTED SYSTEMS
SUPPLEMENTARY RECORD OF COMPLETION

This form is a supplement to the System Record of Completion. It includes a list of types and locations of systems that are interconnected to the main system.
This form is to be completed by the system installation contractor at the time of system acceptance and approval.
It shall be permitted to modify this form as needed to provide a more complete and/or clear record.
Insert N/A in all unused lines.

Form Completion Date: 2 November 2019 Number of Supplemental Pages Attached: _____

1. PROPERTY INFORMATION

Name of property: World Storage and Transfer Headquarters

Address: 27132 Santa Anita Boulevard, Hilo, HI

2. INTERCONNECTED SYSTEMS

Description	Location	Purpose
Fan Shutdown	Roof	Shut down fans on fire alarm activation
Elevator Recall	Elevator Room	Recall elevators in case of alarm on lobby smoke detectors

See Main System Record of Completion for additional information, certifications, and approvals.

© 2018 National Fire Protection Association NFPA 72

Δ ***FIGURE A.7.8.2(1)(e)*** *Example of Completed Interconnected Systems Supplementary Record of Completion.*

DEVIATIONS FROM ADOPTED CODES AND STANDARDS SUPPLEMENTARY RECORD OF COMPLETION

This form is a supplement to the System Record of Completion. It enables the designer and/or installer to document and justify deviations from accepted codes or standards.
This form is to be completed by the system installation contractor at the time of system acceptance and approval.
It shall be permitted to modify this form as needed to provide a more complete and/or clear record.
Insert N/A in all unused lines.

Form Completion Date: _____ Number of Supplemental Pages Attached: _____

1. PROPERTY INFORMATION

Name of property: _____

Address: _____

2. DEVIATIONS FROM ADOPTED CODES OR STANDARDS

Description	Purpose

See Main System Record of Completion for additional information, certifications, and approvals.

© 2018 National Fire Protection Association NFPA 72

Δ ***FIGURE 7.8.2(f)*** *Deviations from Adopted Codes and Standards Supplementary Record of Completion. (SIG-FUN)*

DEVIATIONS FROM ADOPTED CODES AND STANDARDS SUPPLEMENTARY RECORD OF COMPLETION

This form is a supplement to the System Record of Completion. It enables the designer and/or installer to document and justify deviations from accepted codes or standards.
This form is to be completed by the system installation contractor at the time of system acceptance and approval.
It shall be permitted to modify this form as needed to provide a more complete and/or clear record.
Insert N/A in all unused lines.

Form Completion Date: 2 November 2019 Number of Supplemental Pages Attached: _____

1. PROPERTY INFORMATION

Name of property: World Storage and Transfer Headquarters

Address: 27132 Santa Anita Boulevard, Hilo, HI

2. DEVIATIONS FROM ADOPTED CODES OR STANDARDS

Description	Purpose
Waterflow switch set to a 120-second trip	Issue has been identified that there are water surges during evening hours

See Main System Record of Completion for additional information, certifications, and approvals.

© 2018 National Fire Protection Association NFPA 72

Δ ***FIGURE A.7.8.2(1)(f)*** *Example of Completed Deviations from Adopted Codes and Standards Supplementary Record of Completion.*

SYSTEM RECORD OF INSPECTION AND TESTING

This form is to be completed by the system inspection and testing contractor at the time of a system test.
It shall be permitted to modify this form as needed to provide a more complete and/or clear record.
Insert N/A in all unused lines.
Attach additional sheets, data, or calculations as necessary to provide a complete record.

Inspection/Test Start Date/Time: _____ Inspection/Test Completion Date/Time: _____

Supplemental Form(s) Attached: _____ (yes/no)

1. PROPERTY INFORMATION

Name of property: _____

Address: _____

Description of property: _____

Name of property representative: _____

Address: _____

Phone: _____ Fax: _____ E-mail: _____

2. TESTING AND MONITORING INFORMATION

Testing organization: _____

Address: _____

Phone: _____ Fax: _____ E-mail: _____

Monitoring organization: _____

Address: _____

Phone: _____ Fax: _____ E-mail: _____

Account number: _____ Phone line 1: _____ Phone line 2: _____

Means of transmission: _____

Entity to which alarms are retransmitted: _____ Phone: _____

3. DOCUMENTATION

Onsite location of the required record documents and site-specific software: _____

4. DESCRIPTION OF SYSTEM OR SERVICE

4.1 Control Unit

Manufacturer: _____ Model number: _____

4.2 Software Firmware

Firmware revision number: _____

4.3 System Power

4.3.1 Primary (Main) Power

Nominal voltage: _____ Amps: _____ Location: _____

Overcurrent protection type: _____ Amps: _____ Disconnecting means location: _____

© 2018 National Fire Protection Association NFPA 72 (p. 1 of 4)

Δ ***FIGURE 7.8.2(g)*** *System Record of Inspection and Testing. (SIG-TMS)*

EXHIBIT 7.5

SYSTEM RECORD OF INSPECTION AND TESTING

This form is to be completed by the system inspection and testing contractor at the time of a system test.
It shall be permitted to modify this form as needed to provide a more complete and/or clear record.
Insert N/A in all unused lines.
Attach additional sheets, data, or calculations as necessary to provide a complete record.

Inspection/Test Start Date/Time: 12/2/2019, 8:00 AM Inspection/Test Completion Date/Time: 5:00 PM

Supplemental Form(s) Attached: yes (yes/no)

1. PROPERTY INFORMATION

Name of property: Main Street Towers

Address: 12345 Main Street, Pleasantville, NY 01111

Description of property: 40-story high-rise building with an adjacent 1-story parking structure

Name of property representative: Mary Morris, Property Manager, Mary's Management Company

Address: 12345 Main Street, Pleasantville, NY 01111

Phone: 222/222-2222 Fax: 333/333-3333 E-mail: mm@mmc.com

2. TESTING AND MONITORING INFORMATION

Testing organization: Fred's Fine Fire Alarm Systems

Address: 789 Broad Street, Pleasantville, NY 01113

Phone: 888/888-8888 Fax: 999/999-9999 E-mail: fredfriendly@fffas.com

Monitoring organization: Manny's Monitoring

Address: 899 First Street, Pleasantville, NY 01114

Phone: 777/777-7777 Fax: 777/777-7771 E-mail: manny@mannys.com

Account number: 123456789 Phone line 1: 800/888-8888 Phone line 2: N/A

Means of transmission: DACT

Entity to which alarms are retransmitted: Pleasantville Fire Department Phone: 444/444-4444

3. DOCUMENTATION

Onsite location of the required record documents and site-specific software: In cabinet adjacent to FACU

4. DESCRIPTION OF SYSTEM OR SERVICE

4.1 Control Unit

Manufacturer: Megasystems Model number: AZ-1230

4.2 Software Firmware

Firmware revision number: 4.567

4.3 System Power

4.3.1 Primary (Main) Power

Nominal voltage: 120 VAC Amps: 6.2 Location: Fire control room

Overcurrent protection type: CB Amps: 20 Disconnecting means location: Room B-107, PB 17, Breaker 05

© 2018 National Fire Protection Association NFPA 72 (p. 1 of 4)

Example of Completed System Record of Inspection and Testing.

SYSTEM RECORD OF INSPECTION AND TESTING *(continued)*

4. DESCRIPTION OF SYSTEM OR SERVICE *(continued)*

4.3.2 Secondary Power

Type: _____ Location: _____

Battery type (if applicable): _____

Calculated capacity of batteries to drive the system:

In standby mode (hours): _____ In alarm mode (minutes): _____

5. NOTIFICATIONS MADE PRIOR TO TESTING

Monitoring organization	Contact: _____	Time: _____
Building management	Contact: _____	Time: _____
Building occupants	Contact: _____	Time: _____
Authority having jurisdiction	Contact: _____	Time: _____
Other, if required	Contact: _____	Time: _____

6. TESTING RESULTS

6.1 Control Unit and Related Equipment

Description	Visual Inspection	Functional Test	Comments
Control unit	❑	❑	
Lamps/LEDs/LCDs	❑	❑	
Fuses	❑	❑	
Trouble signals	❑	❑	
Disconnect switches	❑	❑	
Ground-fault monitoring	❑	❑	
Supervision	❑	❑	
Local annunciator	❑	❑	
Remote annunciators	❑	❑	
Remote power panels	❑	❑	
	❑	❑	

6.2 Secondary Power

Description	Visual Inspection	Functional Test	Comments
Battery condition	❑	❑	
Load voltage	❑	❑	
Discharge test	❑	❑	
Charger test	❑	❑	
Remote panel batteries	❑	❑	

© 2018 National Fire Protection Association NFPA 72 (p. 2 of 4)

Δ ***FIGURE 7.8.2(g)*** *Continued*

EXHIBIT 7.5 (Continued)

SYSTEM RECORD OF INSPECTION AND TESTING *(continued)*

4. DESCRIPTION OF SYSTEM OR SERVICE *(continued)*

4.3.2 Secondary Power

Type: Engine-Driven Generator Location: Lower level generator room

Battery type (if applicable): Lead-acid

Calculated capacity of batteries to drive the system:

In standby mode (hours): 4 In alarm mode (minutes): 30

5. NOTIFICATIONS MADE PRIOR TO TESTING

Monitoring organization	Contact: Manny Monitor	Time: 8:10 AM
Building management	Contact: Mary Morris	Time: 8:00 AM
Building occupants	Contact: By PA Announcement Time	Time: 8:15 AM
Authority having jurisdiction	Contact: Pleasantville Fire Department	Time: 8:15 AM
Other, if required	Contact: N/A	Time: N/A

6. TESTING RESULTS

6.1 Control Unit and Related Equipment

Description	Visual Inspection	Functional Test	Comments
Control unit	☒	☒	
Lamps/LEDs/LCDs	☒	☒	
Fuses	☒	❑	Visual only
Trouble signals	☒	☒	
Disconnect switches	☒	☒	
Ground-fault monitoring	☒	☒	
Supervision	☒	☒	
Local annunciator	☒	☒	
Remote annunciators	☒	☒	
Remote power panels	☒	☒	
	❑	❑	N/A

6.2 Secondary Power

Description	Visual Inspection	Functional Test	Comments
Battery condition	☒	☒	
Load voltage	☒	☒	
Discharge test	☒	☒	
Charger test	☒	☒	
Remote panel batteries	☒	☒	

© 2018 National Fire Protection Association NFPA 72 (p. 2 of 4)

SYSTEM RECORD OF INSPECTION AND TESTING *(continued)*

6. TESTING RESULTS *(continued)*

6.3 Alarm and Supervisory Alarm Initiating Device

Attach supplementary device test sheets for all initiating devices.

6.4 Notification Appliances

Attach supplementary appliance test sheets for all notification appliances.

6.5 Interface Equipment

Attach supplementary interface component test sheets for all interface components.

Circuit Interface / Signaling Line Circuit Interface / Fire Alarm Control Interface

6.6 Supervising Station Monitoring

Description	Yes	No	Time	Comments
Alarm signal	❑	❑		
Alarm restoration	❑	❑		
Trouble signal	❑	❑		
Trouble restoration	❑	❑		
Supervisory signal	❑	❑		
Supervisory restoration	❑	❑		

6.7 Public Emergency Alarm Reporting System

Description	Yes	No	Time	Comments
Alarm signal	❑	❑		
Alarm restoration	❑	❑		
Trouble signal	❑	❑		
Trouble restoration	❑	❑		
Supervisory signal	❑	❑		
Supervisory restoration	❑	❑		

© 2018 National Fire Protection Association NFPA 72 (p. 3 of 4)

Δ ***FIGURE 7.8.2(g)*** *Continued*

EXHIBIT 7.5 (Continued)

SYSTEM RECORD OF INSPECTION AND TESTING *(continued)*

6. TESTING RESULTS *(continued)*

6.3 Alarm and Supervisory Alarm Initiating Device

Attach supplementary device test sheets for all initiating devices.

6.4 Notification Appliances

Attach supplementary appliance test sheets for all notification appliances.

6.5 Interface Equipment

Attach supplementary interface component test sheets for all interface components.

Circuit Interface / *Signaling Line Circuit Interface* / *Fire Alarm Control Interface*

6.6 Supervising Station Monitoring

Description	Yes	No	Time	Comments
Alarm signal	☒	❑	4:30 PM	
Alarm restoration	☒	❑	4:40 PM	
Trouble signal	☒	❑	4:30 PM	
Trouble restoration	☒	❑	4:40 PM	
Supervisory signal	☒	❑	4:30 PM	
Supervisory restoration	☒	❑	4:40 PM	

6.7 Public Emergency Alarm Reporting System

Description	Yes	No	Time	Comments
Alarm signal	❑	❑		N/A
Alarm restoration	❑	❑		N/A
Trouble signal	❑	❑		N/A
Trouble restoration	❑	❑		N/A
Supervisory signal	❑	❑		N/A
Supervisory restoration	❑	❑		N/A

© 2018 National Fire Protection Association NFPA 72 (p. 3 of 4)

SYSTEM RECORD OF INSPECTION AND TESTING *(continued)*

7. NOTIFICATIONS THAT TESTING IS COMPLETE

Monitoring organization	Contact: _____	Time: _____
Building management	Contact: _____	Time: _____
Building occupants	Contact: _____	Time: _____
Authority having jurisdiction	Contact: _____	Time: _____
Other, if required	Contact: _____	Time: _____

8. SYSTEM RESTORED TO NORMAL OPERATION

Date: _____ Time: _____

9. CERTIFICATION

This system as specified herein has been inspected and tested according to NFPA 72, _____ edition, Chapter 14.

Signed: _____ Printed name: _____ Date: _____

Organization: _____ Title: _____ Phone: _____

Qualifications (refer to 10.5.3): _____

10. DEFECTS OR MALFUNCTIONS NOT CORRECTED AT CONCLUSION OF SYSTEM INSPECTION, TESTING, OR MAINTENANCE

_____

_____

_____

_____

_____

_____

_____

_____

_____

_____

_____

_____

_____

_____

_____

10.1 Acceptance by Owner or Owner's Representative:

The undersigned accepted the test report for the system as specified herein:

Signed: _____ Printed name: _____ Date: _____

Organization: _____ Title: _____ Phone: _____

© 2018 National Fire Protection Association NFPA 72 (p. 4 of 4)

Δ ***FIGURE 7.8.2(g)*** *Continued*

EXHIBIT 7.5 (Continued)

SYSTEM RECORD OF INSPECTION AND TESTING *(continued)*

7. NOTIFICATIONS THAT TESTING IS COMPLETE

Monitoring organization	Contact: Manny Monitor	Time: 4:40 PM
Building management	Contact: Mary Morris	Time: 4:40 PM
Building occupants	Contact: By PA Announcement Time	Time: 4:40 PM
Authority having jurisdiction	Contact: Pleasantville Fire Department	Time: 4:40 PM
Other, if required	Contact: N/A	Time: N/A

8. SYSTEM RESTORED TO NORMAL OPERATION

Date: 12/2/2019 Time: 4:40 PM

9. CERTIFICATION

This system as specified herein has been inspected and tested according to NFPA 72, 2019 edition, Chapter 14.

Signed: Fred's Printed name: Fred Friendly Date: 12/2/2019

Organization: Fred's Fine Fire Alarm Systems Title: President Phone: 888/888-8888

Qualifications (refer to 10.5.3): factory certified

10. DEFECTS OR MALFUNCTIONS NOT CORRECTED AT CONCLUSION OF SYSTEM INSPECTION, TESTING, OR MAINTENANCE

N/A

10.1 Acceptance by Owner or Owner's Representative:

The undersigned accepted the test report for the system as specified herein:

Signed: Mary's Printed name: Mary Morris Date: 12/2/2019

Organization: Mary's Management Title: Property Manager Phone: 222/222-2222

© 2018 National Fire Protection Association NFPA 72 (p. 4 of 4)

NOTIFICATION APPLIANCE SUPPLEMENTARY RECORD OF INSPECTION AND TESTING

This form is a supplement to the System Record of Inspection and Testing.
It includes a notification appliance test record.
This form is to be completed by the system inspection and testing contractor at the time of the inspection and/or test.
It shall be permitted to modify this form as needed to provide a more complete and/or clear record.
Insert N/A in all unused lines.

Inspection/Test Start Date/Time: _____ Inspection/Test Completion Date/Time: _____

Number of Supplemental Pages Attached: _____

1. PROPERTY INFORMATION

Name of property: _____

Address: _____

2. NOTIFICATION APPLIANCE TEST RESULTS

Appliance Type	Location/Identifier	Test Results

© 2018 National Fire Protection Association NFPA 72 (p. 1 of 2)

Δ ***FIGURE 7.8.2(h)*** *Notification Appliance Supplementary Record of Inspection and Testing. (SIG-TMS)*

EXHIBIT 7.6

NOTIFICATION APPLIANCE SUPPLEMENTARY RECORD OF INSPECTION AND TESTING

This form is a supplement to the System Record of Inspection and Testing.
It includes a notification appliance test record.
This form is to be completed by the system inspection and testing contractor at the time of the inspection and/or test.
It shall be permitted to modify this form as needed to provide a more complete and/or clear record.
Insert N/A in all unused lines.

Inspection/Test Start Date/Time: 12/2/2019, 8:00 AM Inspection/Test Completion Date/Time: 5:00 PM

Number of Supplemental Pages Attached: 0

1. PROPERTY INFORMATION

Name of property: Main Street Towers

Address: 12345 Main Street, Pleasantville, NY 01111

2. NOTIFICATION APPLIANCE TEST RESULTS

Appliance Type	Location/Identifier	Test Results
S/V	BB-North Basement corridor	OK
S/V	BB-South Basement corridor	OK
S/V	BB-East Basement corridor	OK
S/V	BB-West Basement corridor	OK
S/V	B-North Basement corridor	OK
S/V	B-South Basement corridor	OK
S/V	B-East Basement corridor	OK
S/V	B-West Basement corridor	OK
S	1st Floor Elevator Lobby East	OK
S	1st Floor Elevator Lobby West	OK
V	1st Floor Reception	OK
Continue with a		
complete listing of		
all appliances		
All speaker/strobes		
individually detailed		
All speakers		
individually detailed		
All strobes		
individually detailed		

© 2018 National Fire Protection Association NFPA 72 (p. 1 of 2)

Example of Completed Notification Appliance Supplementary Record of Inspection and Testing.

NOTIFICATION APPLIANCE SUPPLEMENTARY RECORD OF INSPECTION AND TESTING *(continued)*

2. NOTIFICATION APPLIANCE TEST RESULTS *(continued)*

Appliance Type	Location/Identifier	Test Results

See main System Record of Inspection and Testing for additional information, certifications, and approvals.

© 2018 National Fire Protection Association NFPA 72 (p. 2 of 2)

Δ ***FIGURE 7.8.2(h)*** *Continued*

EXHIBIT 7.6 (Continued)

NOTIFICATION APPLIANCE SUPPLEMENTARY RECORD OF INSPECTION AND TESTING *(continued)*

2. NOTIFICATION APPLIANCE TEST RESULTS *(continued)*

Appliance Type	Location/Identifier	Test Results
Continue with a		
complete listing of		
all appliances		
from p.1.		
If additional		
space is needed,		
attach supplemental		
pages. The number		
of supplemental		
pages should be		
recorded at the		
top of p.1.		

See main System Record of Inspection and Testing for additional information, certifications, and approvals.

© 2018 National Fire Protection Association NFPA 72 (p. 2 of 2)

INITIATING DEVICE
SUPPLEMENTARY RECORD OF INSPECTION AND TESTING

This form is a supplement to the System Record of Inspection and Testing.
It includes an initiating device test record.
This form is to be completed by the system inspection and testing contractor at the time of the inspection and/or test.
It shall be permitted to modify this form as needed to provide a more complete and/or clear record.
Insert N/A in all unused lines.

Inspection/Test Start Date/Time: _____ Inspection/Test Completion Date/Time: _____

Number of Supplemental Pages Attached: _____

1. PROPERTY INFORMATION

Name of property: _____

Address: _____

2. INITIATING DEVICE TEST RESULTS

Device Type	Address	Location	Test Results

© 2018 National Fire Protection Association NFPA 72 (p. 1 of 2)

Δ ***FIGURE 7.8.2(i)*** *Initiating Device Supplementary Record of Inspection and Testing. (SIG-TMS)*

EXHIBIT 7.7

INITIATING DEVICE
SUPPLEMENTARY RECORD OF INSPECTION AND TESTING

This form is a supplement to the System Record of Inspection and Testing.
It includes an initiating device test record.
This form is to be completed by the system inspection and testing contractor at the time of the inspection and/or test.
It shall be permitted to modify this form as needed to provide a more complete and/or clear record.
Insert N/A in all unused lines.

Inspection/Test Start Date/Time: 12/2/2019, 8:00 AM Inspection/Test Completion Date/Time: 5:00 PM

Number of Supplemental Pages Attached: 0

1. PROPERTY INFORMATION

Name of property: Main Street Towers

Address: 12345 Main Street, Pleasantville, NY 01111

2. INITIATING DEVICE TEST RESULTS

Device Type	Address	Location	Test Results
Station	101-101	BB-North corridor	OK
Station	101-102	BB-South corridor	OK
Station	101-103	BB-East corridor	OK
Station	101-104	BB-West corridor	OK
Heat	101-105	Room BB-101	OK
Heat	101-106	Room BB-102	OK
Heat	101-107	Room BB-103	OK
Heat	101-108	Room BB-104	OK
Heat	101-109	Room BB-105	OK
Heat	101-110	Room BB-106	OK
Heat	101-111	Room BB-107	OK
Heat	101-112	Room BB-108	OK
Heat	101-113	Room BB-109	OK
Heat	101-114	Room B-101	OK
Heat	101-115	Room B-102	OK
Heat	101-116	Room B-103	OK
Heat	101-117	Room B-104	OK
Heat	101-118	Room B-105	OK
Heat	101-119	Room B-106	OK
Heat	101-120	Room B-107	OK

© 2018 National Fire Protection Association NFPA 72 (p. 1 of 2)

Example of Completed Initiating Device Supplementary Record of Inspection and Testing.

INITIATING DEVICE
SUPPLEMENTARY RECORD OF INSPECTION AND TESTING *(continued)*

2. INITIATING DEVICE TEST RESULTS ***(continued)***

Device Type	Address	Location	Test Results

See main System Record of Inspection and Testing for additional information, certifications, and approvals.

© 2018 National Fire Protection Association NFPA 72 (p. 2 of 2)

Δ ***FIGURE 7.8.2(i)*** *Continued*

EXHIBIT 7.7 (Continued)

INITIATING DEVICE
SUPPLEMENTARY RECORD OF INSPECTION AND TESTING *(continued)*

2. INITIATING DEVICE TEST RESULTS *(continued)*

Device Type	Address	Location	Test Results
Heat	101-121	Room B-108	OK
Heat	101-122	Room B-109	OK
WF	101-123	East Riser	OK
WF	101-124	West Riser	OK
Tamper	101-125	East Riser	OK
Tamper	101-126	West Riser	OK
Smoke	101-127	Lobby North	OK
Smoke	101-128	Lobby South	OK
Heat	101-129	Lobby East	OK
Smoke	101-130	Lobby West	OK
Smoke	101-131	Elevator Lobby 1	OK
Smoke	101-132	Elevator Lobby 2	OK
Smoke	101-133	Room 1-107	OK
Smoke	101-134	Room 1-107	OK
Smoke	101-135	Room 1-107	OK
Smoke	101-136	Room 1-107	OK
Smoke	101-137	Room 1-108	OK
Smoke	101-138	Room 1-108	OK
Continue with a		If additional space is	
complete listing		needed, attach supplemental	
of all devices		pages. The number of	
All initiating		supplemental pages should	
devices individually		be recorded at the top	
detailed		of p.1.	

See main System Record of Inspection and Testing for additional information, certifications, and approvals.

© 2018 National Fire Protection Association NFPA 72 (p. 2 of 2)

MASS NOTIFICATION SYSTEM
SUPPLEMENTARY RECORD OF INSPECTION AND TESTING

This form is a supplement to the System Record of Inspection and Testing.
It includes a mass notification system test record.
This form is to be completed by the system inspection and testing contractor at the time of the inspection and/or test.
It shall be permitted to modify this form as needed to provide a more complete and/or clear record.
Insert N/A in all unused lines.

Inspection/Test Start Date/Time: _____ Inspection/Test Completion Date/Time: _____

Number of Supplemental Pages Attached: _____

1. PROPERTY INFORMATION

Name of property: _____

Address: _____

2. MASS NOTIFICATION SYSTEM

2.1 System Type

❏ In-building MNS—combination

❏ In-building MNS—stand alone ❏ Wide-area MNS ❏ Distributed recipient MNS

❏ Other (specify): _____

2.2 System Features

❏ Combination fire alarm/MNS ❏ MNS ACU only ❏ Wide-area MNS to regional national alerting interface

❏ Local operating console (LOC) ❏ Direct recipient MNS (DRMNS) ❏ Wide-area MNS to DRMNS interface

❏ Wide-area MNS to high-power loudspeaker array (HPLA) interface ❏ In-building MNS to wide-area MNS interface

❏ Other (specify): _____

3. IN-BUILDING MASS NOTIFICATION SYSTEM

3.1 Primary Power

Input voltage of MNS panel: _____ MNS panel amps: _____

3.2 Engine-Driven Generator ❏ This system does not have a generator.

Location of generator: _____

Location of fuel storage: _____ Type of fuel: _____

3.3 Energy Storage Systems ❏ This system does not have an ESS.

Equipment powered by an ESS system: _____

Location of ESS system: _____

Calculated capacity of ESS batteries to drive the system components connected to it:

In standby mode (hours): _____ In alarm mode (minutes): _____

3.4 Batteries

Location: _____ Type: _____ Nominal voltage: _____ Amp/hour rating: _____

Calculated capacity of batteries to drive the system:

In standby mode (hours): _____ In alarm mode (minutes): _____

❏ Batteries are marked with date of manufacture.

© 2018 National Fire Protection Association NFPA 72 (p. 1 of 2)

Δ ***FIGURE 7.8.2(j)*** *Mass Notification System Supplementary Record of Inspection and Testing. (SIG-TMS)*

EXHIBIT 7.8

MASS NOTIFICATION SYSTEM
SUPPLEMENTARY RECORD OF INSPECTION AND TESTING

This form is a supplement to the System Record of Inspection and Testing.
It includes a mass notification system test record.
This form is to be completed by the system inspection and testing contractor at the time of the inspection and/or test.
It shall be permitted to modify this form as needed to provide a more complete and/or clear record.
Insert N/A in all unused lines.

Inspection/Test Start Date/Time: 12/2/2019, 8:00 AM Inspection/Test Completion Date/Time: 5:00 PM

Number of Supplemental Pages Attached: 0

1. PROPERTY INFORMATION

Name of property: Main Street Towers

Address: 12345 Main Street, Pleasantville, NY 01111

2. MASS NOTIFICATION SYSTEM

2.1 System Type

☒ In-building MNS—combination

❑ In-building MNS—stand alone ❑ Wide-area MNS ❑ Distributed recipient MNS

❑ Other (specify): N/A

2.2 System Features

☒ Combination fire alarm/MNS ❑ MNS ACU only ❑ Wide-area MNS to regional national alerting interface

☒ Local operating console (LOC) ❑ Direct recipient MNS (DRMNS) ❑ Wide-area MNS to DRMNS interface

❑ Wide-area MNS to high-power loud speaker array (HPLA) interface ❑ In-building MNS to wide-area MNS interface

❑ Other (specify): N/A

3. IN-BUILDING MASS NOTIFICATION SYSTEM

3.1 Primary Power

Input voltage of MNS panel: 120 VAC MNS panel amps: 6.2

3.2 Engine-Driven Generator ❑ This system does not have a generator.

Location of generator: Lower level generator room

Location of fuel storage: Sub basement fuel storage room Type of fuel: Diesel

3.3 Energy Storage Systems ☒ This system does not have an ESS.

Equipment powered by an ESS system: _____

Location of ESS system: _____

Calculated capacity of ESS batteries to drive the system components connected to it:

In standby mode (hours): _____ In alarm mode (minutes): _____

3.4 Batteries

Location: Fire control room Type: VRLA Nominal voltage: 24 VDC Amp/hour rating: 30

Calculated capacity of batteries to drive the system:

In standby mode (hours): 38 In alarm mode (minutes): 11

☒ Batteries are marked with date of manufacture.

© 2018 National Fire Protection Association NFPA 72 (p. 1 of 2)

Example of Completed Mass Notification System Supplementary Record of Inspection and Testing.

MASS NOTIFICATION SYSTEM
SUPPLEMENTARY RECORD OF INSPECTION AND TESTING *(continued)*

4. MASS NOTIFICATION EQUIPMENT TEST RESULTS

Description	Visual Inspection	Functional Test	Comments
Functional test	❑	❑	
Reset/power down test	❑	❑	
Fuses	❑	❑	
Primary power supply	❑	❑	
ESS power test	❑	❑	
Trouble signals	❑	❑	
Disconnect switches	❑	❑	
Ground-fault monitoring	❑	❑	
CCU security mechanism	❑	❑	
Prerecorded message content	❑	❑	
Prerecorded message activation	❑	❑	
Software backup performed	❑	❑	
Test backup software	❑	❑	
Fire alarm to MNS interface	❑	❑	
MNS to fire alarm interface	❑	❑	
In-building MNS to wide-area MNS	❑	❑	
MNS to direct recipient MNS	❑	❑	
Sound pressure levels Occupied ❑ Yes ❑ No Ambient dBA: _____ Alarm dBA: _____ (attach supplementary notification appliance form(s) with locations, values, and weather conditions)	❑	❑	
System intelligibility Test method: _____ Score: _____ CIS value: _____ (attach supplementary notification appliance form(s) with locations, values, and weather conditions)	❑	❑	
Other (specify):	❑	❑	

See main System Record of Inspection and Testing for additional information, certifications, and approvals.

© 2018 National Fire Protection Association NFPA 72 (p. 2 of 2)

Δ ***FIGURE 7.8.2(j)*** *Continued*

EXHIBIT 7.8 (Continued)

MASS NOTIFICATION SYSTEM
SUPPLEMENTARY RECORD OF INSPECTION AND TESTING *(continued)*

4. MASS NOTIFICATION EQUIPMENT TEST RESULTS

Description	Visual Inspection	Functional Test	Comments
Functional test	☒	☒	
Reset/power down test	☒	☒	
Fuses	☒	❑	Visual only
Primary power supply	☒	☒	
ESS power test	❑	❑	Did not test
Trouble signals	☒	☒	
Disconnect switches	☒	☒	
Ground-fault monitoring	☒	☒	
CCU security mechanism	❑	❑	N/A
Prerecorded message content	☒	☒	
Prerecorded message activation	☒	☒	
Software backup performed	❑	❑	No
Test backup software	☒	☒	
Fire alarm to MNS interface	☒	☒	
MNS to fire alarm interface	☒	☒	
In-building MNS to wide-area MNS	❑	❑	N/A
MNS to direct recipient MNS	❑	❑	N/A
Sound pressure levels Occupied ❑ Yes ❑ No Ambient dBA: _____ Alarm dBA: _____ (attach supplementary notification appliance form(s) with locations, values, and weather conditions)	☒	☒	Tested by ear only
System intelligibility Test method: _____ Score: _____ CIS value: _____ (attach supplementary notification appliance form(s) with locations, values, and weather conditions)	☒	☒	Tested by ear only
Other (specify):	❑	❑	N/A

See main System Record of Inspection and Testing for additional information, certifications, and approvals.

© 2018 National Fire Protection Association NFPA 72 (p. 2 of 2)

EMERGENCY COMMUNICATIONS SYSTEMS SUPPLEMENTARY RECORD OF INSPECTION AND TESTING

This form is a supplement to the System Record of Inspection and Testing.
It includes systems and components specific to emergency communication systems.
This form is to be completed by the system inspection and testing contractor at the time of the inspection and/or test.
It shall be permitted to modify this form as needed to provide a more complete and/or clear record.
Insert N/A in all unused lines.

Inspection/Test Start Date/Time: _____ Inspection/Test Completion Date/Time: _____

Number of Supplemental Pages Attached: _____

1. PROPERTY INFORMATION

Name of property: _____

Address: _____

2. DESCRIPTION OF SYSTEM OR SERVICE

❑ Fire alarm with in-building fire emergency voice alarm communication system (EVAC)

❑ Mass notification system

❑ Combination system, with the following components:

❑ Fire alarm ❑ EVACS ❑ MNS ❑ Two-way, in-building, emergency communication system

❑ Other (specify): _____

Additional description of system(s): _____

_____

2.1 In-Building Fire Emergency Voice Alarm Communication System

Manufacturer: _____ Model number: _____

Number of single voice alarm channels: _____ Number of multiple voice alarm channels: _____

Number of loudspeakers: _____ Number of loudspeaker circuits: _____

Location of amplification and sound processing equipment: _____

_____

_____

Location of paging microphone stations:

Location 1: _____

Location 2: _____

Location 3: _____

2.2 Mass Notification System

2.2.1 System Type:

❑ In-building MNS—combination

❑ In-building MNS ❑ Wide-area MNS ❑ Distributed recipient MNS

❑ Other (specify): _____

© 2018 National Fire Protection Association NFPA 72 (p. 1 of 5)

Δ ***FIGURE 7.8.2(k)*** *Emergency Communications Systems Supplementary Record of Inspection and Testing. (SIG-TMS)*

EXHIBIT 7.9

EMERGENCY COMMUNICATIONS SYSTEMS SUPPLEMENTARY RECORD OF INSPECTION AND TESTING

This form is a supplement to the System Record of Inspection and Testing.
It includes systems and components specific to emergency communication systems.
This form is to be completed by the system inspection and testing contractor at the time of the inspection and/or test.
It shall be permitted to modify this form as needed to provide a more complete and/or clear record.
Insert N/A in all unused lines.

Inspection/Test Start Date/Time: 12/2/2019, 8:00 AM Inspection/Test Completion Date/Time: 5:00 PM

Number of Supplemental Pages Attached: 0

1. PROPERTY INFORMATION

Name of property: Main Street Towers

Address: 12345 Main Street, Pleasantville, NY 01111

2. DESCRIPTION OF SYSTEM OR SERVICE

☒ Fire alarm with in-building fire emergency voice alarm communication system (EVAC)

☒ Mass notification system

☒ Combination system, with the following components:

☒ Fire alarm ☒ EVACS ☒ MNS ☒ Two-way, in-building, emergency communication system

❑ Other (specify): N/A

Additional description of system(s): N/A

2.1 In-Building Fire Emergency Voice Alarm Communication System

Manufacturer: Megasystems Model number: AZ-1230

Number of single voice alarm channels: 2 Number of multiple voice alarm channels: 0

Number of loud speakers: 99 Number of loud speaker circuits: 12

Location of amplification and sound processing equipment:
Fire control room

Location of paging microphone stations:

Location 1: Fire control room

Location 2: Security office

Location 3: N/A

2.2 Mass Notification System

2.2.1 System Type:

☒ In-building MNS—combination

☒ In-building MNS ❑ Wide-area MNS ❑ Distributed recipient MNS

❑ Other (specify): N/A

© 2018 National Fire Protection Association NFPA 72 (p. 1 of 5)

Example of Completed Emergency Communications Systems Supplementary Record of Inspection and Testing.

EMERGENCY COMMUNICATIONS SYSTEMS SUPPLEMENTARY RECORD OF INSPECTION AND TESTING *(continued)*

2. DESCRIPTION OF SYSTEM OR SERVICE *(continued)*

2.2.2 System Features:

❑ Combination fire alarm/MNS ❑ MNS autonomous control unit ❑ Wide-area MNS to regional national alerting interface
❑ Local operating console (LOC) ❑ Distributed-recipient MNS (DRMNS) ❑ Wide-area MNS to DRMNS interface
❑ Wide-area MNS to high-power loudspeaker array (HPLA) interface ❑ In-building MNS to wide-area MNS interface
❑ Other (specify): _____

2.2.3 MNS Local Operating Consoles

Location 1: _____
Location 2: _____
Location 3: _____

2.2.4 High-Power Loudspeaker Arrays

Number of HPLA loudspeaker initiation zones: _____
Location 1: _____
Location 2: _____
Location 3: _____

2.2.5 Mass Notification Devices

Combination fire alarm/MNS visual devices: _____ MNS-only visual devices: _____
Textual signs: _____ Other (describe): _____
Supervision class: _____

2.2.6 Special Hazard Notification

❑ This system does not have special suppression pre-discharge notification
❑ MNS systems DO NOT override notification appliances required to provide special suppression pre-discharge notification

3. TWO-WAY EMERGENCY COMMUNICATION SYSTEMS

3.1 Telephone System

Number of telephone jacks installed: _____ Number of warden stations installed: _____
Number of telephone handsets stored on site: _____
Type of telephone system installed: ❑ Electrically powered ❑ Sound powered

3.2 Area of Refuge (Area of Rescue Assistance) Emergency Communications Systems

Number of stations: _____ Location of central control point: _____
Days and hours when central control point is attended: _____
Location of alternate control point: _____
Days and hours when alternate control point is attended: _____

© 2018 National Fire Protection Association NFPA 72 (p. 2 of 5)

Δ ***FIGURE 7.8.2(k)*** *Continued*

EXHIBIT 7.9 (Continued)

EMERGENCY COMMUNICATIONS SYSTEMS
SUPPLEMENTARY RECORD OF INSPECTION AND TESTING *(continued)*

2. DESCRIPTION OF SYSTEM OR SERVICE *(continued)*

2.2.2 System Features:

☒ Combination fire alarm/MNS ☒ MNS autonomous control unit ❑ Wide-area MNS to regional national alerting interface
☒ Local operating console (LOC) ❑ Distributed-recipient MNS (DRMNS) ❑ Wide-area MNS to DRMNS interface
❑ Wide-area MNS to high-power loud speaker array (HPLA) interface ❑ In-building MNS to wide-area MNS interface
❑ Other (specify): N/A

2.2.3 MNS Local Operating Consoles

Location 1: Fire control room
Location 2: Security office
Location 3: N/A

2.2.4 High-Power Loud Speaker Arrays

Number of HPLA loud speaker initiation zones: _____
Location 1: N/A
Location 2: _____
Location 3: _____

2.2.5 Mass Notification Devices

Combination fire alarm/MNS visual devices: 62 MNS-only visual devices: N/A
Textual signs: N/A Other (describe): N/A
Supervision class: A

2.2.6 Special Hazard Notification

☒ This system does not have special suppression pre-discharge notification
❑ MNS systems DO NOT override notification appliances required to provide special suppression pre-discharge notification

3. TWO-WAY EMERGENCY COMMUNICATION SYSTEMS

3.1 Telephone System

Number of telephone jacks installed: 15 Number of warden stations installed: 3
Number of telephone handsets stored on site: 6
Type of telephone system installed: ❑ Electrically powered ☒ Sound powered

3.2 Area of Refuge (Area of Rescue Assistance) Emergency Communications Systems

Number of stations: N/A Location of central control point: _____
Days and hours when central control point is attended: _____
Location of alternate control point: _____
Days and hours when alternate control point is attended: _____

© 2018 National Fire Protection Association NFPA 72 (p. 2 of 5)

EMERGENCY COMMUNICATIONS SYSTEMS
SUPPLEMENTARY RECORD OF INSPECTION AND TESTING *(continued)*

3. TWO-WAY EMERGENCY COMMUNICATIONS SYSTEMS *(continued)*

3.3 Elevator Emergency Communications Systems

Number of elevators with stations: _____ Location of central control point: _____

Days and hours when central control point is attended: _____

Location of alternate control point: _____

Days and hours when alternate control point is attended: _____

3.4 Other Two-Way Communication System

Describe: _____

4. TESTING RESULTS

4.1 Control Unit and Related Equipment

Description	Visual Inspection	Functional Test	Comments
Control unit	❑	❑	
Lamps/LEDs/LCDs	❑	❑	
Fuses	❑	❑	
Trouble signals	❑	❑	
Disconnect switches	❑	❑	
Ground fault monitoring	❑	❑	
Supervision	❑	❑	
Local annunciator	❑	❑	
Remote annunciators	❑	❑	
Remote power panels	❑	❑	
Other:	❑	❑	

4.2 Secondary Power

Description	Visual Inspection	Functional Test	Comments
Battery condition	❑	❑	
Load voltage	❑	❑	
Discharge test	❑	❑	
Charger test	❑	❑	
Remote panel batteries	❑	❑	

© 2018 National Fire Protection Association NFPA 72 (p. 3 of 5)

Δ ***FIGURE 7.8.2(k)*** *Continued*

EXHIBIT 7.9 (Continued)

EMERGENCY COMMUNICATIONS SYSTEMS
SUPPLEMENTARY RECORD OF INSPECTION AND TESTING *(continued)*

3. TWO-WAY EMERGENCY COMMUNICATIONS SYSTEMS *(continued)*

3.3 Elevator Emergency Communications Systems

Number of elevators with stations: 2 Location of central control point: Fire control room

Days and hours when central control point is attended: 0

Location of alternate control point: Manny's Monitoring

Days and hours when alternate control point is attended: 24/7

3.4 Other Two-Way Communication System

Describe: N/A

4. TESTING RESULTS

4.1 Control Unit and Related Equipment

Description	Visual Inspection	Functional Test	Comments
Control unit	☒	☒	
Lamps/LEDs/LCDs	☒	☒	
Fuses	☒	❑	Visual only
Trouble signals	☒	☒	
Disconnect switches	☒	☒	
Ground fault monitoring	☒	☒	
Supervision	☒	☒	
Local annunciator	☒	☒	
Remote annunciators	☒	☒	
Remote power panels	☒	☒	
Other:	❑	❑	N/A

4.2 Secondary Power

Description	Visual Inspection	Functional Test	Comments
Battery condition	☒	☒	
Load voltage	☒	☒	
Discharge test	☒	☒	
Charger test	☒	☒	
Remote panel batteries	☒	☒	

© 2018 National Fire Protection Association NFPA 72 (p. 3 of 5)

EMERGENCY COMMUNICATIONS SYSTEMS SUPPLEMENTARY RECORD OF INSPECTION AND TESTING *(continued)*

4. TESTING RESULTS *(continued)*

4.3 Emergency Communications Equipment

Description	Visual Inspection	Functional Test	Comments
Control unit	❑	❑	
Lamps/LEDs/LCDs	❑	❑	
Fuses	❑	❑	
Secondary power supply	❑	❑	
Trouble signals	❑	❑	
Disconnect switches	❑	❑	
Ground fault monitoring	❑	❑	
Panel supervision	❑	❑	
System performance	❑	❑	
System audibility	❑	❑	
System intelligibility	❑	❑	
Other:	❑	❑	

4.4 Mass Notification Equipment

Description	Visual Inspection	Functional Test	Comments
Functional test	❑	❑	
Reset/Power down test	❑	❑	
Fuses	❑	❑	
Primary power supply	❑	❑	
ESS power test	❑	❑	
Trouble signals	❑	❑	
Disconnect switches	❑	❑	
Ground fault monitoring	❑	❑	
CCU security mechanism	❑	❑	
Prerecorded message content	❑	❑	
Prerecorded message activation	❑	❑	
Software backup performed	❑	❑	
Test backup software	❑	❑	
Fire alarm to MNS Interface	❑	❑	
MNS to fire alarm interface	❑	❑	
In-building MNS to wide-area MNS	❑	❑	
MNS to direct recipient MNS	❑	❑	

© 2018 National Fire Protection Association NFPA 72 (p. 4 of 5)

Δ ***FIGURE 7.8.2(k)*** *Continued*

EXHIBIT 7.9 (Continued)

EMERGENCY COMMUNICATIONS SYSTEMS SUPPLEMENTARY RECORD OF INSPECTION AND TESTING *(continued)*

4. TESTING RESULTS *(continued)*

4.3 Emergency Communications Equipment

Description	Visual Inspection	Functional Test	Comments
Control unit	☒	☒	
Lamps/LEDs/LCDs	☒	☒	
Fuses	☒	❑	Visual only
Secondary power supply	☒	☒	
Trouble signals	☒	☒	
Disconnect switches	☒	☒	
Ground fault monitoring	☒	☒	
Panel supervision	☒	☒	
System performance	☒	☒	
System audibility	☒	☒	
System intelligibility	☒	☒	Tested by ear w/AHJ
Other:	❑	❑	

4.4 Mass Notification Equipment

Description	Visual Inspection	Functional Test	Comments
Functional test	☒	☒	
Reset/Power down test	☒	☒	
Fuses	☒	❑	Visual only
Primary power supply	☒	☒	
ESS power test	❑	❑	Did not test
Trouble signals	☒	☒	
Disconnect switches	☒	☒	
Ground fault monitoring	☒	☒	
CCU security mechanism	❑	❑	N/A
Prerecorded message content	☒	☒	
Prerecorded message activation	☒	☒	
Software backup performed	❑	❑	No
Test backup software	☒	☒	
Fire alarm to MNS Interface	☒	☒	
MNS to fire alarm interface	☒	☒	
In-building MNS to wide-area MNS	❑	❑	N/A
MNS to direct recipient MNS	❑	❑	N/A

© 2018 National Fire Protection Association NFPA 72 (p. 4 of 5)

EMERGENCY COMMUNICATIONS SYSTEMS SUPPLEMENTARY RECORD OF INSPECTION AND TESTING *(continued)*

4. TESTING RESULTS *(continued)*

4.4 Mass Notification Equipment *(continued)*

Description	Visual Inspection	Functional Test	Comments
Sound pressure levels (attach report with locations, values, and weather conditions)	❑	❑	
System intelligibility ❑ CSI ❑ STI (attach report with locations, values, and weather conditions)	❑	❑	
Other:	❑	❑	

4.5 Two-Way Communication Equipment

Description	Visual Inspection	Functional Test	Comments
Phone handsets	❑	❑	
Phone jacks	❑	❑	
Off-hook indicator	❑	❑	
Call-in signal	❑	❑	
System performance	❑	❑	
System audibility	❑	❑	
System intelligibility	❑	❑	
Other:	❑	❑	

See main System Record of Inspection and Testing for additional information, certifications, and approvals.

© 2018 National Fire Protection Association NFPA 72 (p. 5 of 5)

Δ ***FIGURE 7.8.2(k)*** *Continued*

EXHIBIT 7.9 (Continued)

EMERGENCY COMMUNICATIONS SYSTEMS
SUPPLEMENTARY RECORD OF INSPECTION AND TESTING *(continued)*

4. TESTING RESULTS *(continued)*

4.4 Mass Notification Equipment *(continued)*

Description	Visual Inspection	Functional Test	Comments
Sound pressure levels (attach report with locations, values, and weather conditions)	☒	☒	Tested by ear only
System intelligibility ❑ CSI ❑ STI (attach report with locations, values, and weather conditions)	☒	☒	Tested by ear only
Other:	❑	❑	N/A

4.5 Two-Way Communication Equipment

Description	Visual Inspection	Functional Test	Comments
Phone handsets	☒	☒	
Phone jacks	☒	☒	
Off-hook indicator	☒	☒	
Call-in signal	☒	☒	
System performance	☒	☒	
System audibility	❑	❑	Did not test
System intelligibility	❑	❑	Did not test
Other:	❑	❑	N/A

See main System Record of Inspection and Testing for additional information, certifications, and approvals.

© 2018 National Fire Protection Association

INTERFACE COMPONENT SUPPLEMENTARY RECORD OF INSPECTION AND TESTING

This form is a supplement to the System Record of Inspection and Testing.
It includes an interface component test record for circuit interfaces, signaling line circuit interfaces, and fire alarm control interfaces.
This form is to be completed by the system inspection and testing contractor at the time of the inspection and/or test.
It shall be permitted to modify this form as needed to provide a more complete and/or clear record.
Insert N/A in all unused lines.

Inspection/Test Start Date/Time: _____ Inspection/Test Completion Date/Time: _____

Number of Supplemental Pages Attached: _____

1. PROPERTY INFORMATION

Name of property: _____

Address: _____

2. INTERFACE COMPONENT TEST RESULTS

Interface Component Type	Address	Location	Test Results

© 2018 National Fire Protection Association NFPA 72 (p. 1 of 2)

Δ ***FIGURE 7.8.2(l)*** *Interface Component Supplementary Record of Inspection and Testing. (SIG-TMS)*

EXHIBIT 7.10

INTERFACE COMPONENT SUPPLEMENTARY RECORD OF INSPECTION AND TESTING

This form is a supplement to the System Record of Inspection and Testing.
It includes an interface component test record for circuit interfaces, signaling line circuit interfaces, and fire alarm control interfaces.
This form is to be completed by the system inspection and testing contractor at the time of the inspection and/or test.
It shall be permitted to modify this form as needed to provide a more complete and/or clear record.
Insert N/A in all unused lines.

Inspection/Test Start Date/Time: 12/2/2019, 8:00 AM Inspection/Test Completion Date/Time: 5:00 PM

Number of Supplemental Pages Attached: 0

1. PROPERTY INFORMATION

Name of property: Main Street Towers

Address: 12345 Main Street, Pleasantville, NY 01111

2. INTERFACE COMPONENT TEST RESULTS

Interface Component Type	Address	Location	Test Results
Control module/fan shut down	101-151	Roof	OK
Control module/elevator recall	101-152	Elevator room	OK
Control module/elevator recall	101-153	Elevator room	OK
Control module/elevator recall	101-154	Elevator room	OK
Continue with a complete listing			
of all devices/appliances			

© 2018 National Fire Protection Association NFPA 72 (p. 1 of 2)

Example of Completed Interface Component Supplementary Record of Inspection and Testing.

INTERFACE COMPONENT
SUPPLEMENTARY RECORD OF INSPECTION AND TESTING *(continued)*

2. INTERFACE COMPONENT TEST RESULTS *(continued)*

Interface Component Type	Address	Location	Test Results

See main System Record of Inspection and Testing for additional information, certifications, and approvals.

© 2018 National Fire Protection Association NFPA 72 (p. 2 of 2)

Δ ***FIGURE 7.8.2(l)*** *Continued*

EXHIBIT 7.10 (Continued)

INTERFACE COMPONENT
SUPPLEMENTARY RECORD OF INSPECTION AND TESTING *(continued)*

2. INTERFACE COMPONENT TEST RESULTS *(continued)*

Interface Component Type	Address	Location	Test Results
Continue with a			
complete listing of			
all devices/appliances			
from p.1.			
If additional space			
is needed, attach			
supplemental pages.			
The number of			
supplemental pages			
should be recorded			
at the top of			
p.1.			

See main System Record of Inspection and Testing for additional information, certifications, and approvals.

© 2018 National Fire Protection Association NFPA 72 (p. 2 of 2)

INSTALLATION AND INSPECTION FORM SINGLE- AND MULTIPLE-STATION ALARMS AND HOUSEHOLD FIRE ALARM SYSTEMS

This form is to be completed at the time of installation/final inspection of any household fire alarm system and single- or multiple-station alarms. It is be permitted to modify this form as required to provide a more complete and/or clear record.
Insert N/A in all unused lines.
Attach additional sheets, data, or calculations as necessary to complete form.

Form Completion Date: _____ Supplemental Pages Attached: _____

1. PROPERTY INFORMATION

Property Owner: _____
Address: _____
Phone: _____ E-Mail: _____ Other: _____

2. INSTALLATION, CONTRACTOR, AND MONITORING INFORMATION

Installation Contractor: _____
Address: _____
Phone: _____ E-Mail: _____ Other: _____

2.1 Type of Off-Premises Notification

Monitoring Organization: _____
Address: _____
Phone: _____ E-Mail: _____ Other: _____
Account Number: _____ Means of Transmission: _____

3. DESCRIPTION OF SYSTEM OR SERVICE

NFPA 72 Edition: _____

3.1 Type of System

❑ Single-Station ❑ Multiple-Station ❑ Household Fire Alarm System ❑ Carbon Monoxide Alarm System

3.2 Number of Devices

Single-Station Smoke Alarms: _____ Multiple-Station Smoke Alarms: _____
Single-Station Heat Alarms: _____ Multiple-Station Heat Alarms: _____
Single-Station Carbon Monoxide Alarms: _____ Multiple-Station Carbon Monoxide Alarms: _____
System Smoke Detectors: _____ System Heat Detectors: _____
Waterflow Switches: _____
Notification Appliances: _____ Type: _____
Interfaced/Other Equipment: _____

3.3 Location (L) and Date (D) of Devices

Device type, location and manufacture date of devices (date shown on back of devices)

_____ _____ _____ _____
_____ _____ _____ _____
_____ _____ _____ _____

Electrical Panel (L): _____ Breaker Number: _____
Alarm Control Unit (L): _____ Battery Back-up (D): _____
Plug in Transformer (L): _____
Relay for Interconnection (L): _____

4. PREPARED BY

Signed: _____ Printed Name: _____ Date: _____
Title: _____ Organization: _____

© 2018 National Fire Protection Association NFPA 72

N ***FIGURE 7.8.2(m)*** *Installation and Inspection Form Single- and Multiple-Station Alarms and Household Fire Alarm Systems.*

EXHIBIT 7.11

INSTALLATION AND INSPECTION FORM SINGLE- AND MULTIPLE-STATION ALARMS AND HOUSEHOLD FIRE ALARM SYSTEMS

This form is to be completed at the time of installation/final inspection of any household fire alarm system and single- or multiple-station alarms. It is be permitted to modify this form as required to provide a more complete and/or clear record.
Insert N/A in all unused lines.
Attach additional sheets, data, or calculations as necessary to complete form.

Form Completion Date: 12/4/2019 Supplemental Pages Attached: N/A

1. PROPERTY INFORMATION

Property Owner: Gomer Sampson
Address: 742 Evergreen Terrace, Spring field, MO 65802
Phone: 636/555 - 0113 E-Mail: N/A Other: N/A

2. INSTALLATION, CONTRACTOR, AND MONITORING INFORMATION

Installation Contractor: J & J Construction
Address: 15 Main St, Springfield, MO 65802
Phone: 636/555 - 8665 E-Mail: N/A Other: N/A

2.1 Type of Off-Premises Notification

Monitoring Organization: N/A
Address: _____
Phone: _____ E-Mail: _____ Other: _____
Account Number: _____ Means of Transmission: _____

3. DESCRIPTION OF SYSTEM OR SERVICE

NFPA 72 Edition: 2019

3.1 Type of System

☐ Single-Station ☒ Multiple-Station ☐ Household Fire Alarm System ☐ Carbon Monoxide Alarm System

3.2 Number of Devices

Single-Station Smoke Alarms: N/A Multiple-Station Smoke Alarms: 7
Single-Station Heat Alarms: N/A Multiple-Station Heat Alarms: N/A
Single-Station Carbon Monoxide Alarms: N/A Multiple-Station Carbon Monoxide Alarms: 3
System Smoke Detectors: N/A System Heat Detectors: _____
Waterflow Switches: N/A
Notification Appliances: N/A Type: N/A
Interfaced/Other Equipment: N/A

3.3 Location (L) and Date (D) of Devices

Device type, location and manufacture date of devices (date shown on back of devices)

Smoke - NE bedroom - July 2019	Smoke - SW bedroom - July 2019	Smoke - basement - Aug 2019	CO - basement - Nov 2019
Smoke - NW bedroom - July 2019	Smoke - 2nd floor ball - July 2019	CO - 2nd floor - Oct 2019	
Smoke - SE bedroom - July 2019	Smoke - 1st floor ball - July 2019	CO - 1st floor - Oct 2019	

Electrical Panel (L): basement Breaker Number: 12
Alarm Control Unit (L): N/A Battery Back-up (D): N/A
Plug in Transformer (L): N/A
Relay for Interconnection (L): N/A

4. PREPARED BY

Signed: Sarah Wiggum Printed Name: Sarah Wiggum Date: 12/4/2019
Title: Contractor Organization: J & J Construction

© 2018 National Fire Protection Association NFPA 72

Example of Completed Installation and Inspection Form Single- and Multiple-Station Alarms and Household Fire Alarm Systems.

References Cited in Commentary

NFPA 4, *Standard for Integrated Fire Protection and Life Safety System Testing*, 2018 edition, National Fire Protection Association, Quincy, MA.

NFPA *101®*, *Life Safety Code®*, 2018 edition, National Fire Protection Association, Quincy, MA.

NFPA 170, *Standard for Fire Safety and Emergency Symbols*, 2018 edition, National Fire Protection Association, Quincy, MA.

NFPA 1600®, *Standard on Disaster/Emergency Management and Business Continuity/Continuity of Operations Programs*, 2016 edition, National Fire Protection Association, Quincy, MA.

NFPA 1616, *Standard on Mass Evacuation, Sheltering, and Re-entry Programs*, 2017 edition, National Fire Protection Association, Quincy, MA.

NFPA 1620, *Standard for Pre-Incident Planning*, 2015 edition, National Fire Protection Association, Quincy, MA.

NFPA 3000™ (PS), *Standard for an Active Shooter/Hostile Event Response (ASHER) Program*, 2018 edition, National Fire Protection Association, Quincy, MA.

Reserved Chapters

In the 2019 edition of *NFPA 72®*, *National Fire Alarm and Signaling Code®*, the following chapters are reserved for future use:

- Chapter 8
- Chapter 9

Fundamentals

CHAPTER

10

Chapter 10 includes requirements that are common to all fire alarm systems except household fire alarm systems. Many requirements in this chapter apply not only to fire alarm systems but also to the broader scope of alarm and signaling systems. The requirements apply to protected premises (local) fire alarm systems, supervising station alarm systems, public emergency alarm reporting systems, emergency communications systems (ECSs), and carbon monoxide (CO) detection systems. The scope of this chapter includes requirements for equipment suitability and compatibility, power supplies, signal priority and distinction of signals, signal indication, signal deactivation, fundamental equipment performance, protection of fire alarm systems, annunciation and annunciation zoning, monitoring integrity of power supplies, and impairments.

Personnel qualification requirements are also provided for the system designer; system installer; inspection, testing, and service personnel; programming personnel; plans examiners and inspectors; supervising station operators; and public emergency alarm reporting system personnel. The following list is a summary of the significant changes to Chapter 10 for the 2019 edition of the Code:

System Design Tip

- Many changes were made to Chapter 10 to reflect the migration of NFPA 720, *Standard for the Installation of Carbon Monoxide (CO) Detection and Warning Equipment*, requirements to *NFPA 72®, National Fire Alarm and Signaling Code®* (see 10.6.7.2.3, 10.6.7.2.4, 10.10.1, 10.10.3, 10.10.9, 10.13). Subsections 10.5.1, 10.5.2, 10.5.3.1 through 10.5.3.5, 10.5.4, and 10.5.5 expand the applicability of qualifications for system designers, installers, inspection, testing, service, programming personnel, and supervising station operators and plans examiners and inspection personnel to CO systems.
- Added 10.4.4 to specify maximum and minimum mounting heights for alarm control unit displays to ensure visibility and access. This aligns with other industry standards.
- Expanded 10.6.1 to provide power supply requirements for CO systems.
- Secondary power sources now include valve-regulated lead-acid (VRLA) batteries.
- Added requirements for energy storage systems (ESSs) to 10.6.4. More information is provided for applicability of NFPA 111, *Standard on Stored Electrical Energy Emergency and Standby Power Systems*.

10.1 Application.

10.1.1 The basic functions of a complete fire alarm and/or signaling system shall comply with the requirements of this chapter.

This chapter addresses the broad scope of signaling systems, not only those associated with fire alarm systems. New to the 2019 edition, Chapter 10 includes requirements for CO detection systems.

N **10.1.2** The requirements of this chapter shall apply to systems, equipment, and components addressed in Chapters 12, 14, 17, 18, 21, 23, 24, 26, and 27.

The basic requirements for all fire alarm systems, except for household fire alarm systems, and for ECSs are contained in Chapter 10. The requirements for household fire alarm systems are addressed in Chapter 29 where, unless noted otherwise, the requirements of Chapter 10 do not apply. See Chapter 24 for ECS.

The requirements of Chapter 1, the references in Chapter 2, and the definitions in Chapter 3 apply throughout the Code, including Chapter 10. Chapter 10 also addresses signal priority and distinction of signals, and CO detection systems. *NFPA 72* does not address electronic intrusion detection systems, which are covered in NFPA 731, *Standard for the Installation of Electronic Premises Security Systems.*

10.1.3 The requirements of Chapter 7 shall apply where referenced in Chapter 10.

Chapter 7 provides a central location for all documentation requirements.

10.2 Purpose.

The purpose of fire alarm and signaling systems shall be primarily to provide notification of alarm, supervisory, and trouble conditions; to alert the occupants; to summon aid; and to control emergency control functions.

The primary purpose of fire alarm and signaling systems is to control outputs involving the notification of occupants or staff; to transmit alarm, supervisory, and trouble signals; and to manage other predetermined fire and life safety operations and functions. The outputs occur because of the change in status of monitored inputs from various initiating devices and other sources that may occur automatically or that may be manually operated.

10.3 Equipment.

10.3.1 Equipment constructed and installed in conformity with this Code shall be listed for the purpose for which it is used.

Just noting that a piece of equipment is listed is not sufficient. The listing of equipment involves evaluation of the equipment to determine its suitability for a specific purpose for which it is used. The evaluation is usually accomplished using product testing standards developed to demonstrate that specific performance requirements have been met. Many of these performance requirements are based on specific requirements in the Code and go far beyond requirements used only to demonstrate electrical safety.

While most equipment would be listed for fire alarm system use, some equipment may have a different listing. As an example, equipment such as routers and modems that may be used with some transmission methods in the signal transmission path between a protected premises and a supervising station might be listed as general communications equipment (see 26.6.3.12).

FAQ What type of information does the equipment listing contain?

Equipment listings generally contain information pertaining to the permitted use, required ambient conditions, mounting orientation, voltage tolerances, compatibility, and so on. Equipment must be installed, tested, and maintained in conformance with the listing and the manufacturer's published instructions to meet the requirements of the Code. Conformance with the listing and the manufacturer's instructions has been a long-standing requirement, originating in the requirements of *NFPA 70®*, *National Electrical Code® (NEC®)*.

10.3.2 System components shall be installed, tested, inspected, and maintained in accordance with the manufacturer's published instructions and this Code.

10.3.3* All devices and appliances that receive their power from the initiating device circuit or signaling line circuit of a control unit shall be listed for use with the control unit.

A.10.3.3 This requirement does not apply to notification appliance circuits.

Detection devices and notification appliances that receive their power directly from either an initiating device circuit (IDC) or a signaling line circuit (SLC) must be listed for that particular control unit. Listing with the specific control unit is not required for devices and appliances installed on notification appliance circuits (NACs).

The most common application where this is a concern is two-wire and addressable (addressable/analog) smoke detectors. A two-wire smoke detector gets its power from the control unit IDC. Addressable devices and appliances on signaling line circuits communicate with the control unit using manufacturer-specific protocols. The listing organizations have developed specific requirements for this listing process and should be consulted, if necessary, to confirm the detector's or appliance's compatibility with a specific control unit.

Δ **10.3.4** All apparatus requiring rewinding or resetting to maintain normal operation shall be restored to normal after each abnormal condition.

10.3.5 Equipment shall be designed so that it is capable of performing its intended functions under the following conditions:

(1)* At 85 percent and at 110 percent of the nameplate primary (main) and secondary (standby) input voltage(s)
(2) At ambient temperatures of 32°F (0°C) and 120°F (49°C)
(3) At a relative humidity of 85 percent and an ambient temperature of 86°F (30°C)

A.10.3.5(1) The requirement of 10.3.5(1) does not preclude transfer to secondary supply at less than 85 percent of nominal primary voltage, provided the requirements of 10.6.7 are met.

Equipment may be listed for use outside these limits, or the space must be conditioned to meet these parameters. If the space must be artificially conditioned, standby power to operate that artificial conditioning should be considered to ensure that the conditioning continues during a power outage for at least as long as the standby power required for the alarm system.

10.4 Design and Installation.

10.4.1* All systems shall be installed in accordance with the plans, specifications, and standards approved by the authority having jurisdiction.

Δ **A.10.4.1** Fire alarm specifications can include some or all of the following:

(1) Address of the protected premises
(2) Owner of the protected premises
(3) Authority having jurisdiction
(4) Applicable codes, standards, and other design criteria to which the system is required to comply
(5) Type of building construction and occupancy
(6) Fire department response point(s) and annunciator location(s)
(7) Type of fire alarm system to be provided

(8) Calculations (e.g., secondary supply and voltage drop calculations)
(9) Type(s) of fire alarm initiating devices, supervisory alarm initiating devices, and evacuation notification appliances to be provided
(10) Intended area(s) of coverage
(11) Complete list of detection, signaling, and annunciator zones
(12) Complete list of emergency control functions
(13) Complete sequence of operations detailing all inputs and outputs

FAQ What information should be considered for the specification package?

System Design Tip

The authority having jurisdiction must be notified before the installation or alteration of any equipment or wiring in accordance with 10.20.2. A prudent designer will contact the authority having jurisdiction before beginning the system design to ensure the submittal requirements are clearly understood. The designer's plans and specifications must receive the approval of the authority having jurisdiction before the installation of the system. Paragraph A.10.4.1 identifies some of the information that should be considered for inclusion in the specification package. When required by the authority having jurisdiction, the minimum documentation to be provided is listed in 7.2.1. Additional documentation, further outlined in Chapter 7, might be needed where required by other governing laws, codes, standards, or other parts of *NFPA 72*.

10.4.2 Devices and appliances shall be located and mounted so that accidental operation or failure is not caused by vibration or jarring.

Compliance with the requirements of 10.4.2 reduces unwanted alarm signals. Accidental activation of the equipment can occur when equipment such as initiating devices is installed in locations subject to physical damage or outside of the device's and appliance's listed temperature or humidity ranges. This fact should not be lost on installation technicians, who may encounter conditions in the field that differ from those anticipated when plans were developed and approved for installation. Likewise, authorities having jurisdiction should keep this requirement in mind when conducting plans reviews and commissioning inspections.

10.4.3 Equipment shall be installed in locations where conditions do not exceed the voltage, temperature, and humidity limits specified in the manufacturer's published instructions.

N **10.4.4*** Unless otherwise permitted by the authority having jurisdiction, control unit displays, visible indicators, or controls shall be mounted such that the distance to the highest switch, lamp, or textual display does not exceed 6 ft (1.8 m) above the finished floor, and the lowest switch, lamp, or textual display shall not be less than 15 in. (375 mm) above the finished floor.

The maximum mounting height for switches and displays eliminates the possibility of mounting a control unit so high that a person cannot reach the switches or read the display without a step stool or stepladder.

This new subsection correlates with NECA 1, *Standard for Good Workmanship in Electrical Construction*, Section 11.2, Chapter 11, Mounting Heights.

N **A.10.4.4** Switches and visible indicators referenced in 10.4.4 are those intended for use by the system owner and first responders. It is not the intent of the committee to require all control unit diagnostic indicators or configuration switches used by the installation/service personnel required to be installed within these limits. Control units that do not have such

operator interface are not bound by this requirement; however; the installer should consider best practice for ease in serviceability.

10.4.5* Unless otherwise permitted by 10.4.6, in areas that are not continuously occupied, early warning fire detection shall be at the location of each control unit(s), notification appliance circuit power extender(s), and supervising station transmitting equipment to provide notification of fire at that location by one of the following means:

(1) An automatic smoke detector at the location of each control unit(s), notification appliance circuit power extender(s), and supervising station transmitting equipment
(2) An automatic heat detector where ambient conditions prohibit installation of an automatic smoke detector

The requirements of 10.4.5 indicate a clear need for protection of fire alarm system equipment beyond the fire alarm control unit. NAC power extenders and supervising station transmitting equipment are included specifically in the requirement for protection. Also refer to A.10.4.5, the defined term *fire alarm control unit* in 3.3.108, the related explanatory material in A.3.3.108, and associated commentary for further explanation of what constitutes a fire alarm control unit.

Smoke detection is required in the areas where this equipment is located any time these areas are not continuously occupied. The term *continuously occupied* means that a person is *always* at the location (24 hours per day, 7 days per week, 365 days per year).

The protection of equipment applies even in the buildings that have an automatic sprinkler system. The exception permits the use of heat detectors where conditions are not suitable for smoke detectors. However, environments that are not suitable for smoke detectors most often are not suitable for control equipment. The listing of the control equipment should always be verified to determine suitable locations. Additional cautionary material is provided in A.10.4.5.

A.10.4.5 The control units that are to be protected are those that provide notification of a fire to the occupants and responders. The term *control unit* does not include equipment such as annunciators and addressable devices. Requiring smoke detection at the transmitting equipment is intended to increase the probability that an alarm signal will be transmitted to a supervising station prior to that transmitting equipment being disabled due to the fire condition.

CAUTION: Exception No. 1 to 10.4.5 permits the use of a heat detector if ambient conditions are not suitable for smoke detection. It is important to also evaluate whether the area is suitable for the control unit.

Where the area or room containing the control unit is provided with total smoke detection coverage, additional smoke detection is not required to protect the control unit. Where total smoke detection coverage is not provided, the Code intends that only one smoke detector is required at the control unit even when the area of the room would require more than one detector if installed according to the spacing rules in Chapter 17. The intent of selective coverage is to address the specific location of the equipment.

The location of the required detection should be in accordance with 17.7.3.2.1.

Where the protection of equipment is required, finding a suitable location for a smoke detector or other appropriate detection, can be difficult. While the reference to 17.7.3.2.1 directs users to the general requirement to locate smoke detectors on the ceiling or on the wall within 12 in. (300 mm) of the ceiling, users may want to consider the allowance in 17.4.7. The related annex material in A.17.4.7 provides specific guidance for locating detectors in applications of fire alarm control units in high-ceiling areas.

N **10.4.6** Smoke or heat detector(s) shall not be required to be installed at the location of dedicated function(s) fire alarm control unit(s) that are not required to provide local or supervising station notification signals.

10.4.7 Initiating Devices.

10.4.7.1 Initiating devices of the manual or automatic type shall be selected and installed to minimize unwanted alarms.

System Design Tip

Care must be exercised by designers, installers, and authorities having jurisdiction when selecting, installing, and approving initiating devices to avoid possible unwanted alarms.

10.4.7.2 Initiating devices shall comply with the requirements of Chapter 17 and Chapter 23.

10.4.7.3 Manual alarms shall be initiated by one of the following ways:

(1) A listed manual fire alarm box
(2) A key operated means
(3) A means contained within a locked cabinet or arranged to provide equivalent protection against unauthorized use

The requirements of 10.4.7.3 emphasize the need to use a means or arrangement for initiating manual alarms that is less likely to be accidentally operated, resulting in an unwanted alarm.

10.5 Personnel Qualifications.

10.5.1 System Designer.

NFPA 720

10.5.1.1 Plans and specifications shall be developed in accordance with this Code by persons who are experienced in the design, application, installation, and testing of the systems.

System Design Tip

Designers are required to be qualified to perform this type of work through training, education, and experience. Typically, a state-licensed professional engineer regularly engaged in the design of these systems meets this requirement. Most state engineering license laws require that only licensed engineers be permitted to perform design work and only in their field of expertise. Some states and local jurisdictions may accept a certain level of certification achieved through a nationally recognized organization.

10.5.1.2 State or local licensure regulations shall be followed to determine qualified personnel.

System Design Tip

State or local licensure requirements must be followed. Depending on the jurisdiction, the designer might be required to be a registered professional engineer or might be permitted to be a contractor that is also installing the system. In either case, the designer needs to be competent with the system that is being designed.

10.5.1.3 Personnel shall provide documentation of their qualification by one or more of the following:

(1) Registration, licensing, or certification by a state or local authority

System Design Tip

This category involves state or local programs that provide assurance of designer qualification.

(2) Certification by an organization acceptable to the authority having jurisdiction

System Design Tip

For this category, a number of independent organizations provide third-party certification for designers of these systems. The authority having jurisdiction is responsible for independently assessing

these programs and certifications to determine if the designer's certification provides the competency required for the system being submitted.

(3) Manufacturer's certification for the specific type and brand of system provided

This category demonstrates that the designer has a basic understanding and knowledge of the specific system to be installed and the requirements of this Code, such that the designer is capable of developing plans and specifications tailored to the manufacturer's equipment. Most system designers that are familiar with specific equipment on a design level have been trained on that system by the manufacturer because each system has unique considerations.

System Design Tip

10.5.1.4 The system designer shall be identified on the system design documents.

Requiring that the system designer be identified on the system design documents encourages the designer to feel a sense of ownership of the design. This identification, in turn, provides an additional incentive for the designer to adhere to the requirements of the Code and provides the authority having jurisdiction with the name of the person responsible for the design who can respond to any questions or comments.

System Design Tip

10.5.1.5 System design trainees shall be under the supervision of a qualified system designer.

Requiring that only well-seasoned and well-qualified system designers design a system is not realistic. Systems can be designed by someone new to the industry who knows the Code requirements for a system, but needs guidance to design a specific system. They are permitted to design systems, provided they are supervised and their work is reviewed by an experienced and qualified system designer.

System Design Tip

10.5.1.6 The system designer shall provide evidence of their qualifications and/or certifications when required by the authority having jurisdiction.

10.5.2 System Installer.

10.5.2.1 Installation personnel shall be qualified or shall be supervised by persons who are qualified in the installation, inspection, and testing of the systems.

NFPA 720

The qualifications required for installation personnel or the personnel supervising the installation of these systems correlate with similar requirements for the system designer in 10.5.1. The requirements of 10.5.2 focus on installation qualifications.

System Design Tip

10.5.2.2 State or local licensure regulations shall be followed to determine qualified personnel.

10.5.2.3 Personnel shall provide documentation of their qualification by one or more of the following:

(1) Registration, licensing, or certification by a state or local authority
(2) Certification by an organization acceptable to the authority having jurisdiction
(3) Manufacturer's certification for the specific type and brand of system provided

10.5.2.4 System installation trainees shall be under the supervision of a qualified system installer.

This requirement permits persons new to the industry the opportunity to install systems. To install a specific manufacturer's system, the installer should receive training from the manufacturer. Novice

installers need to be supervised by a qualified system installer until they are competent enough and qualified to do installations on their own.

10.5.2.5 The system installer shall provide evidence of their qualifications and/or certifications when requested by the authority having jurisdiction.

10.5.3* Inspection, Testing, and Service Personnel. (SIG-TMS)

The term *service personnel* indicates that, in addition to providing what some may refer to as "maintenance" on a system, such as changing batteries, a broader meaning of the scope of work is intended. Personnel working on a system are permitted to be qualified and experienced individually or by affiliation with an organization (typically their employer) that is appropriately registered, licensed, or certified according to jurisdictional requirements.

The specific qualification requirements for the inspection, testing, service, and programming personnel are addressed separately in 10.5.3.1 through 10.5.3.5. Inspection and testing personnel can be considered qualified if the authority having jurisdiction accepts that they have the training, knowledge, and experience needed for the duties they will perform. As an alternative, qualification can be demonstrated by one of the four means detailed in 10.5.3.4. Also refer to the separate definitions for inspection, testing, and service personnel in 3.3.200.

A.10.5.3 It is not the intent to require personnel performing simple inspections or operational tests of initiating devices to require factory training or special certification, provided such personnel can demonstrate knowledge in these areas.

The qualification requirements are to assure that personnel conducting inspections, testing, maintenance, or system programming have the appropriate knowledge and training for the specific activity. It is not intended that every individual be "factory certified." The type and level of knowledge and training will vary from one system and activity to another. For example, the training necessary for an individual conducting visual inspections in a small office building to confirm that smoke and heat detectors are present, unobstructed, and undamaged would be less than the training for an individual conducting visual inspections and testing of flame detectors or air-sampling smoke detection systems in a complex manufacturing facility.

10.5.3.1* Inspection Personnel. Inspections shall be performed by personnel who have developed competence through training and experience that are acceptable to the authority having jurisdiction or meet the requirement of 10.5.3.4.

A.10.5.3.1 The requirements for inspection personnel can vary depending on the type of inspection being performed. The purpose for initial and reacceptance inspections is to ensure compliance with approved design documents and to ensure installation in accordance with this Code and other required installation standards. Therefore, the acceptance inspection should be performed by someone who is familiar with the specific requirements, the design documents, and the applicable codes and standards. This implies that acceptance inspections should be performed by the persons or entities responsible for the system design and by authorities having jurisdiction.

Once a system or a change to a system has been accepted, the inspection needs also change. The purpose for periodic inspections is to assure that obvious damages or changes that might affect the system operability are visually identified. Those persons performing periodic system inspections might or might not be familiar with all the specific system design goals and requirements. While many periodic inspections could uncover design faults, the intent of this Code is for such problems to be discovered at the acceptance inspection. The

Code does not intend to require persons performing periodic inspections necessarily to be knowledgeable or qualified for inspecting and verifying the design of a system.

10.5.3.2* Testing Personnel. Testing personnel shall have knowledge and experience of the testing requirements contained in this Code, of the equipment being tested, and of the test methods. That knowledge and experience shall be acceptable to the authority having jurisdiction or meet the requirement of 10.5.3.4.

A.10.5.3.2 Testing personnel knowledge should include equipment selection, placement, and installation requirements of this Code and the manufacturer's published documentation.

10.5.3.3 Service Personnel. Service personnel shall have knowledge and experience of the maintenance and servicing requirements contained in this Code, of the equipment being serviced or maintained, and of the servicing or maintenance methods. That knowledge and experience shall be acceptable to the authority having jurisdiction or meet the requirement of 10.5.3.4.

10.5.3.4 Means of Qualification. Qualified personnel shall include, but not be limited to, one or more of the following:

(1)* Personnel who are factory trained and certified for the specific type and brand of system being serviced
(2)* Personnel who are certified by a nationally recognized certification organization acceptable to the authority having jurisdiction
(3)* Personnel who are registered, licensed, or certified by a state or local authority to perform service on systems addressed within the scope of this Code, either individually or through their affiliation with an organization
(4) Personnel who are employed and qualified by an organization listed by a nationally recognized testing laboratory for the servicing of systems within the scope of this Code

The Code recognizes four methods to demonstrate that service personnel are qualified. Refer to A.14.2.3.6 for a list of the seven basic skills that service personnel should be able to perform.

A.10.5.3.4(1) Factory training and certification is intended to allow an individual to service equipment only for which he or she has specific brand and model training.

One of the methods permitted to demonstrate a technician's qualifications is factory training. Often, service personnel are factory trained to perform or assist with system testing. Because each manufacturer's control equipment is different, the servicing of control equipment, including things such as the replacement of circuit boards, should only be done by technicians trained to service the specific equipment (manufacturer and model) that they will be working on. Without proper training from a system manufacturer on critical system components, properly maintaining a system will be difficult.

A.10.5.3.4(2) Nationally recognized fire alarm certification programs might include those programs offered by the International Municipal Signal Association (IMSA), National Institute for Certification in Engineering Technologies (NICET), and the Electronic Security Association (ESA). NOTE: These organizations and the products or services offered by them have not been independently verified by the NFPA, nor have the products or services been endorsed or certified by the NFPA or any of its technical committees.

The International Municipal Signal Association (IMSA) is the professional association of individuals who oversee public fire communications systems and traffic signaling systems. IMSA conducts educational programs for technicians and authorities having jurisdiction, offers interior fire alarm certification programs for

fire alarm technicians, and publishes cable requirements for public emergency alarm reporting systems. Interior Fire Alarm Level II certification is the minimum level that should be considered to meet this requirement. Contact IMSA at 597 Haverty Court, Suite 100, Rockledge, FL 32955, or at www.imsasafety.org.

The National Institute for Certification in Engineering Technologies (NICET) offers a program of certification for fire alarm technicians. NICET Level II certification is the minimum level that should be considered to meet this qualification. Contact NICET at 1420 King Street, Alexandria, VA 22314-2794, or at www.nicet.org.

A.10.5.3.4(3) Licenses and certifications offered at a state or local level are intended to recognize those individuals who have demonstrated a minimum level of technical competency in the area of fire alarm servicing.

This category recognizes that the state or local authority having jurisdiction may have specific certifications, licensing tests, or other requirements that must be met.

The category identified in 10.5.3.4(4) recognizes that service personnel employed by a listed central station or listed alarm service local company may be used for servicing of fire alarm systems in accordance with 26.3.3. A listed central station or listed alarm service local company has satisfactorily demonstrated to the listing organization that their personnel are capable of providing the inspection, testing, or maintenance services they offer.

10.5.3.5* Programming Personnel.

A.10.5.3.5 This is not intended to require certification where it is not offered or required by the manufacturer.

Not every manufacturer offers a certification program for personnel programming their systems. Some fire alarm control units and fire alarm systems can be set up and programmed by following instructions provided by the manufacturer without the need for a specific training and certification program.

10.5.3.5.1 Personnel programming a system shall be certified by the system manufacturer.

10.5.3.5.2 System installation personnel shall be permitted to configure systems in the field per manufacturers' published instructions.

In some cases, "programming" a system may be as simple as setting dip switches or a similar method to "program" a system for a site-specific application or use. These methods might include enabling alarm verification, disabling a particular feature that is not needed, or selecting whether a particular device or circuit initiates an alarm or supervisory signal. For such control equipment or systems, installation personnel can simply follow the published instructions provided by the manufacturer to "program" the system.

10.5.3.5.3 System end users shall be permitted to manage system operation per manufacturers' published instructions or training.

10.5.3.6 Evidence of Qualification. Evidence of qualifications shall be provided to the authority having jurisdiction upon request.

10.5.4 Plans Examiners and Inspectors.

The requirements for plans examiners and inspectors vary depending on the type of system being installed. Someone experienced in electrical systems might not have the qualifications or system knowledge to review fire alarm plans. For example, do they know how to check battery and voltage drop calculations? It is important to verify who is qualified to review plans and specifications for specific systems.

10.5.4.1 Plans and specifications submitted for review and approval shall be reviewed by personnel who are qualified to review such plans and specifications. NFPA 720

10.5.4.2 System installations shall be inspected by personnel who are qualified to perform such inspections. NFPA 720

10.5.4.3 State or local licensure regulations shall be followed to determine qualified personnel.

10.5.4.4 Personnel shall provide documentation of their qualifications by one or more of the following:

(1) Registration, licensing, or certification by a state or local authority
(2) Meeting the requirements of NFPA 1031
(3) Assignment by the authority having jurisdiction to personnel having equivalent competency with 10.5.4.4(1) or 10.5.4.4(2)

10.5.5 Supervising Station Operators. (SIG-SSS)

While the methods of demonstrating supervising station operator qualifications are similar to those of persons who design, install, and service fire alarm systems and ECSs, the subject matter is different. Supervising station operators play a vital role in the response to emergencies and must be well versed in the procedures and equipment they use in performing their duties, which depends on the type of supervising station they work in. An operator working in a fire/police communications center would likely experience different daily work scenarios than an operator working in a listed central station or a proprietary monitoring station.

10.5.5.1 All operators in the supervising station shall demonstrate competence in all tasks required of them in Chapter 26 by one or more of the following:

(1) Certified by the manufacturer of the receiving system or equipment or the alarm-monitoring automation system
(2)* Certified by an organization acceptable to the authority having jurisdiction
(3) Licensed or certified by a state or local authority
(4) Other training or certification approved by the authority having jurisdiction

A.10.5.5.1(2) An example of an organization providing alarm monitoring operator training is the Central Station Alarm Association (CSAA). Note that this reference is for information purposes only, information concerning the product or service has been provided by the manufacturer or other outside sources, and the information concerning the product or service has not been independently verified nor has the product or service been endorsed or certified by the NFPA or any of its technical committees.

It should be noted that the Central Station Alarm Association (CSAA) referenced in A.10.5.5.1(2) has changed its name to The Monitoring Association (TMA). Another source of training and certification for supervising station operators located at government-operated facilities is available through the Association of Public-Safety Communications Officials (APCO).

10.5.5.2 Evidence of qualifications and/or certification shall be provided when requested by the authority having jurisdiction. A license or qualification listing shall be current in accordance with the requirements of the issuing authority or organization.

10.5.5.3 Operator trainees shall be under the direct supervision of a qualified operator until qualified as required by 10.5.5.1.

10.5.6 Public Emergency Alarm Reporting System Personnel Qualification. (SIG-PRS)

System Design Tip

Public emergency alarm reporting systems use unique technologies. Wired public emergency alarm reporting systems use constant current series loops that are capable of operation in a closed loop (normal) or open loop (open circuit) configuration. In an open loop, the circuit is capable of reporting alarm signals by using an earth ground return signaling configuration.

Wireless public emergency alarm reporting systems use analog or digital signals via radio frequency carrier to report alarms. These systems require FCC licensed frequencies and FCC certified transmitter components. Designers, installers, and service personnel must be familiar with the specialized technologies in addition to aerial and underground cable practices. They also must comply with the requirements of NFPA 1221, *Standard for the Installation, Maintenance, and Use of Emergency Services Communications Systems,* which governs the receiving and processing systems at the communications center.

10.5.6.1 System Designer.

System Design Tip

The requirements for system designer, system installer, service personnel, and their qualifications were moved from 27.3.7 in the 2013 edition to 10.5.6 in the 2016 edition of the Code. See the commentary following 27.3.7.

10.5.6.1.1 Public emergency alarm reporting system plans and specifications shall be developed in accordance with this Code by persons who are qualified in the proper design, application, installation, and testing of public emergency alarm reporting systems.

10.5.6.1.2 The system design documents shall include the name and contact information of the system designer.

10.5.6.2 System Installer. Installation personnel shall be qualified in the installation, inspection, and testing of public emergency alarm reporting systems.

10.5.6.3 Service Personnel. Service personnel shall be qualified in the service, inspection, maintenance, and testing of public emergency alarm reporting systems.

10.5.6.4 Qualification.

10.5.6.4.1 Personnel shall demonstrate qualification by being trained and certified in public emergency alarm reporting system design, installation, or service (as appropriate).

10.5.6.4.2 Personnel who are trained and certified for the specific type of public emergency alarm reporting system and comply with one the following shall be considered qualified:

(1) Personnel who are licensed or certified by a state or local authority, if applicable
(2)* Personnel who are certified by a nationally recognized certification organization acceptable to the authority having jurisdiction
(3) Personnel who are employed and qualified by an organization listed by a nationally recognized testing laboratory for the design, installation, or servicing of systems within the scope of this chapter
(4)* Personnel who are employed and certified by an equipment manufacturer for the specific type of system

A.10.5.6.4.2(2) An example of an organization providing public emergency alarm reporting system certification is the International Municipal Signal Association. Note that this reference is for information purposes only. Information concerning the product or service has been provided by the manufacturer or other outside sources, and the information concerning the

product or service has not been independently verified, nor has the product or service been endorsed or certified by NFPA or any of its technical committees.

A.10.5.6.4.2(4) Factory training and certification are intended to allow individuals to service only the equipment for which they have specific brand and model training.

10.5.6.4.3 Evidence of qualifications and/or certification shall be provided when requested by the authority having jurisdiction. A license or qualification listing shall be current in accordance with the requirements of the issuing authority or organization.

10.6 Power Supplies.

Δ **10.6.1* Scope.** The provisions of this section shall apply to power supplies.

NFPA 720

N **A.10.6.1** Exceptions exist in Chapter 23 for low-power wireless systems and in Chapter 29 for household low-power wireless systems and smoke alarms.

The requirements of Section 10.6 apply to all systems, except household fire alarm systems addressed in Chapter 29. These requirements apply unless they conflict with the requirements specified in other chapters. For example, Chapter 23, Protected Premises Alarm and Signaling Systems, includes special requirements for power supplies for low-power wireless systems in 23.16.2.

10.6.2 Code Conformance. All power supplies shall be installed in accordance with applicable requirements of *NFPA 70*.

10.6.3 Power Supply Sources.

10.6.3.1 Power shall be supplied in accordance with either 10.6.3.2 or 10.6.4.

10.6.3.2 Unless configured in compliance with 10.6.4, at least two independent and reliable power supplies shall be provided, one primary and one secondary.

Editions of the Code before 2002 included exceptions that permitted fire alarm systems to be supplied only by a primary power source, eliminating the secondary source if the primary source was from a dedicated branch circuit of an emergency, legally required standby, or optional standby power system. In the 2002 edition, these exceptions were eliminated, so that a primary power source and a secondary power source are always required.

10.6.3.3 Each power supply shall be of adequate capacity for the application.

10.6.3.4 Monitoring the integrity of power supplies shall be in accordance with 10.6.9.

10.6.4* Energy Storage Systems (ESS).

These requirements provide details for the type of system required if the ESS option is used. The Type, Class, and Level designations specified in 10.6.4.1 refer to the classifications specified in Chapter 4 of NFPA 111. The Type O designation requires that the ESS has no interruptions — it must be able to carry the load in 0 seconds. The Class 24 designation requires the ESS to be able to operate at its rated load without being refueled or recharged for 24 hours. The Level 1 designation requires the system to be permanently installed and have equipment performance requirements for the most stringent applications where failure of the equipment to perform could result in loss of human life or serious injuries. The equipment, design, inspection, and testing requirements for Level 1 systems go beyond those for Level 2 systems.

The proper capacity for the ESS must be determined carefully so that its rated load is adequate for the fire alarm system or ECS that it serves. The ESS must be supplied by a branch circuit that supplies no other loads except for fire alarm equipment or ECS equipment. The power must be from a source as described in 10.6.5. The branch circuit and its disconnecting means must comply with the requirements in 10.6.5.1 through 10.6.5.5.

Information on stored-energy emergency power supply systems (SEPSS) from NFPA 111 is provided.

NFPA 111 (2019)

4.2.2* The interruption times of the SEPSS types covered by this standard shall be as provided in Table 4.2.2.

TABLE 4.2.2 *Types of SEPSS*

Type	Interruption Time
Type O	No interruptions — UPS carrying load, 0.0 sec
Type U	UPS system with utility as preferred source
Type **A**	0.25 cycle: 0.0042 sec
Type B	1.0 cycle: 0.0167 sec
Type 10	10 sec
Type M	Manual stationary or nonautomatic — no time limit

4.3* Class. The class shall determine the minimum time, in hours, for which the SEPSS is designed to operate at its rated load without being refueled or recharged as shown in Table 4.3.

TABLE 4.3 *Classes of SEPSS*

Class	Reserve Time
Class 0.033	0.033 hr (2 min)
Class 0.083	0.083 hr (5 min)
Class 0.25	0.25 hr (15 min)
Class 1.5	1.5 hr (90 min)
Class X	Other time, in hours, as required by the application, code, or user

4.4 Category. This standard shall regulate stored-energy devices into the following two categories:

(1) Category **A** includes stored-energy devices receiving their energy solely from the normal supply under conditions of normal operation.

(2) Category B includes all devices not included in Category A and not specifically excluded elsewhere in this standard.

4.5* Level. The level of equipment installation, performance, and maintenance shall be as specified in 4.5.1 through 4.5.5.

4.5.1* Level 1 systems shall be installed where failure of the equipment to perform could result in loss of human life or serious injuries.

4.5.2* Level 2 systems shall be installed where failure of the EPSS to perform is less critical to human life and safety.

4.5.3 All equipment shall be permanently installed.

4.5.4* Level 1 and Level 2 SEPSS shall supply alternate power of a quality that ensures reliable operation of the load, within the time determined by the type and for a duration determined by the class.

4.5.5* Other equipment and applications, including optional standby systems, not defined in Levels 1 and 2 are beyond the scope of this document.

N **A.10.6.4** ESS classifications are found in NFPA 111. Previous editions of *NFPA 72* referenced uninterruptible power supplies (UPS) systems, which is one type of an ESS.

10.6.4.1 The ESS device shall be configured in compliance with NFPA 111 for a Type O, Class 24, Level 1 system.

N **10.6.4.2** Where connected to an engine-driven generator arranged in accordance with 10.6.11.3.1, the ESS device shall be permitted to be configured in compliance with NFPA 111 for a Type O, Class 4, Level 1 system.

10.6.4.3 The ESS device shall comply with the requirements of 10.6.5.

10.6.4.4 Failure of the ESS shall result in the initiation of a trouble signal in accordance with Section 10.15.

10.6.5 Primary Power Supply.

10.6.5.1 Branch Circuit.

NFPA 720

10.6.5.1.1 The branch circuit supplying the equipment shall be supplied by one of the following:

(1) Electric utility
(2) An engine-driven generator or equivalent in accordance with 10.6.11.2, where a person trained in its operation is on duty at all times
(3) An engine-driven generator or equivalent arranged for cogeneration with an electric utility in accordance with 10.6.11.2, where a person trained in its operation is on duty at all times

An engine-driven generator is permitted as a primary power supply because the electric utility (commercial light and power) service may not be available at all locations. Paragraph 10.6.5.1.1(3) recognizes the use of engine-driven generators arranged for cogeneration with an electric utility (commercial light and power). Where an engine-driven generator is used as the primary power supply, it must comply with 10.6.11.2 but is not required to be part of an emergency power system.

10.6.5.1.2* The branch circuit supplying the equipment shall supply no other loads.

No other loads can be on a branch circuit providing power for fire alarm or emergency communications equipment. The circuit can be used to power other control units and power supplies that are part of the system, but this circuit cannot be used to power other equipment, such as phone switches, music-on-hold, fax machines, computer stations, and so forth. Also refer to the commentary following 10.6.5.5.

N **A.10.6.5.1.2** Multiple pieces of system equipment can be connected to a branch circuit, subject to the current capacity of the circuit. It is not intended that a branch circuit be limited to a single piece of equipment. It is not intended that the circuit supply power to other than system equipment. For example, a branch circuit could power both a fire alarm control unit and an NAC power supply, but it could not power both a fire alarm control unit and a sprinkler system air compressor.

10.6.5.2 Circuit Identification and Accessibility.

10.6.5.2.1 The location of the branch circuit disconnecting means shall be permanently identified at the control unit.

10.6.5.2.2* The system circuit disconnecting means shall be marked to identify the system or equipment that it serves.

NFPA 720

N **A.10.6.5.2.2** The purpose of this requirement is to ensure that circuit disconnecting means for fire alarm and signaling systems are readily identifiable so that users will not mistakenly disconnect the power to the system or so that they can quickly disconnect power without having to search the electrical panelboard chart to identify the circuit. The intent of this requirement is not to require specific text for identification. Marking can include one of the following:

(1) "FIRE ALARM" for fire alarm systems
(2) "EMERGENCY COMMUNICATIONS" for emergency communications systems
(3) "FIRE ALARM/ECS" for combination fire alarm and emergency communications systems
(4) "CARBON MONOXIDE" for carbon monoxide detection systems

It would be acceptable to show the text using upper and/or lower case, such as "fire alarm," or "Fire Alarm," or "FIRE ALARM."

10.6.5.2.3 For fire alarm and/or signaling systems, the circuit disconnecting means shall have a red marking.

See the following extracts from *NFPA 70*.

***NFPA 70* (2017)**

110.22 Identification of Disconnecting Means.

(A) General. Each disconnecting means shall be legibly marked to indicate its purpose unless located and arranged so the purpose is evident. The marking shall be of sufficient durability to withstand the environment involved.

760.121 (B) Branch Circuit. The branch circuit supplying the fire alarm equipment(s) shall supply no other loads. The location of the branch-circuit overcurrent protective device shall be permanently identified at the fire alarm control unit. The circuit disconnecting means shall have red identification, shall be accessible only to qualified personnel, and shall be identified as "FIRE ALARM CIRCUIT." The red identification shall not damage the overcurrent protective devices or obscure the manufacturer's markings. This branch circuit shall not be supplied through ground-fault circuit interrupters or arc-fault circuit interrupters.

10.6.5.2.4 The red marking shall not damage the overcurrent protective devices or obscure the manufacturer's markings.

10.6.5.2.5 The circuit disconnecting means shall be accessible only to authorized personnel.

The requirements in 10.6.5.2.1 through 10.6.5.2.5 apply to any fire alarm system or ECS. Paragraph 10.6.5.2.4 calls out the need to use caution when marking overcurrent protective devices so as not to damage the device, inhibit its operation, or obscure the manufacturer's markings.

In some cases, the branch circuit supplying the fire alarm/ECS is served by a remote electrical subpanel. When this arrangement occurs, the information about which feeder circuit or main electrical panel circuit is connected to the electrical subpanel should be marked in the subpanel. Access to the main panel or circuit supplying the subpanel should be restricted and marked in a similar manner as the subpanel.

10.6.5.3 Mechanical Protection. The branch circuit(s) and connections shall be protected against physical damage.

10.6.5.4 Circuit Breaker Lock. Where a circuit breaker is the disconnecting means, an approved breaker locking device shall be installed.

FAQ

What is the purpose of mechanical protection and identification of the power supply circuit?

The requirements of 10.6.5.2, 10.6.5.3, and 10.6.5.4 are to protect the power supply from tampering, aid in troubleshooting, and help ensure the safety of those who service the equipment. They are also intended to support the reliability of the equipment. By limiting access, the chance that the power to the fire alarm system is turned off decreases. The requirement of 10.6.5.3 for mechanical protection helps to protect the circuit supplying primary power to the system against physical damage. This protection can usually be provided through the use of an appropriate wiring method installed in accordance with the requirements of the *NEC*. A similar requirement is provided in 10.6.7.3.2 for circuits that supply secondary power.

10.6.5.5 Overcurrent Protection. An overcurrent protective device shall be provided in accordance with *NFPA 70*.

All wiring and equipment, including the circuits that supply power to the fire alarm/ECS, must be installed in accordance with the *NEC*. Primary power must be supplied through a branch circuit in accordance with 10.6.5.1 of *NFPA 72*. The term *branch circuit* as defined in the *NEC* includes "the circuit conductors between the final overcurrent device protecting the circuit and the outlet(s)." (In this case, the outlet is the point where the connections are made to the fire alarm/ECS equipment.) The branch circuit overcurrent protective device should not be confused with service equipment that is used to connect the (power) service conductors at their entrance to the building.

10.6.6* Continuity of Power Supplies.

A.10.6.6 Where a computer system of any kind is used to receive and process alarm or supervisory signals, an ESS with sufficient capacity to operate the system until the secondary supply is capable of operating the fire alarm system might be required in order to prevent signal loss or a greater than 10-second signal delay.

ESS equipment often contains an internal bypass arrangement to supply the load directly from the line. These internal bypass arrangements are a potential source of failure. ESS equipment also requires periodic maintenance. It is, therefore, necessary to provide a means of promptly and safely bypassing and isolating the ESS equipment from all power sources while maintaining continuity of power supply to the equipment normally supplied by the ESS.

10.6.6.1 The secondary power supply shall automatically provide power to the protected premises system within 10 seconds whenever the primary power supply voltage is insufficient for required system operation.

This requirement correlates with the Type 10 requirement in 10.6.11.3.1.1.

10.6.6.2 The secondary power supply shall automatically provide power to the supervising station facility and equipment within 60 seconds whenever the primary power supply voltage is insufficient for required system operation.

This requirement correlates with the Type 60 requirement in 10.6.11.3.2.1. The Code recognizes the potential for increased complexity of transferring to secondary power at a supervising station facility.

10.6.6.3 Required signals shall not be lost, interrupted, or delayed by more than 10 seconds as a result of the primary power failure.

10.6.6.3.1 Storage batteries dedicated to the system or ESS arranged in accordance with the provisions of NFPA 111 shall be permitted to supplement the secondary power supply to ensure required operation during the transfer period.

10.6.6.3.2 Where an ESS is employed in 10.6.6.3.1, a positive means for disconnecting the input and output of the ESS system while maintaining continuity of power supply to the load shall be provided.

The requirement for disconnection of the ESS is to ensure that power is provided to the system during maintenance and testing of the ESS.

10.6.7 Secondary Power Supply.

The requirements for secondary power supplies are organized into separate sections for protected premises fire alarm systems and ECSs (see 10.6.7.3) and for supervising station facilities (see 10.6.7.4).

10.6.7.1 Secondary Power Operation.

10.6.7.1.1 Operation on secondary power shall not affect the required performance of a system or supervising station facility, including alarm, supervisory, and trouble signals and indications.

Exception: While operating on secondary power, audio amplifier monitoring shall be required only when an alarm is present.

Manufacturers have supplied systems in the past that, to conserve battery power, eliminated annunciation of additional trouble conditions and eliminated some supplementary functions in the standby power mode. This requirement that a system operate with all the same features as when it is powered by the primary power source prevents further use of that practice. An allowance for audio amplifiers is provided in the exception, which recognizes that systems are typically arranged to disconnect power to amplifiers to conserve power when they are operating under secondary power. Subsection 10.19.1 provides more specific requirements for monitoring the integrity of audio amplifiers and when trouble signals are required to be transmitted.

10.6.7.2* Capacity.

In some applications, it might be prudent to include a capacity sufficient for periods longer than 24 hours. (See 10.6.7.2.1.) Additional consideration of this point is provided in A.10.6.7.2.

A.10.6.7.2 When a fire alarm system is used to alert occupants, the associated premises are generally evacuated during prolonged power outages. When this is not the case, as in emergency shelters or certain government facilities, additional secondary power should be required to address a more prolonged outage. These outages might be expected to result from weather or earthquake in locations subject to these events. Reasonable judgment should be employed when requiring additional secondary capacity.

When a fire alarm system is used to protect property, the associated premises might be vacant for prolonged periods (weekend, long holiday) or in very remote locations. When this is the case, and when the risk of loss is significant, additional secondary power should be required to address a more prolonged outage. These outages might be expected to result from

weather or earthquake in locations subject to these events. Reasonable judgment should be employed when requiring additional secondary capacity.

10.6.7.2.1 The secondary power supply shall have sufficient capacity to operate the system under quiescent load (system operating in a nonalarm condition) for a minimum of 24 hours and, at the end of that period, shall be capable of operating all alarm notification appliances used for evacuation or to direct aid to the location of an emergency for 5 minutes, unless otherwise permitted or required by 10.6.7.2.1.1 through 10.6.7.2.2.

10.6.7.2.1.1* Battery calculations shall include a minimum 20 percent safety margin above the calculated amp-hour capacity required.

Δ **A.10.6.7.2.1.1** The 20-percent safety margin is intended to address normal aging effects on a battery's capacity. As a battery ages, rated capacity will decrease to 80 percent, which is considered the end of service life. As a minimum, a 20-percent correction factor should be applied for aging to ensure the battery can meet its current demand at the end of service life. At initial installation, battery capacity can be as low as 90 percent and should gradually increase when it is subjected to several deep discharge/charging cycles or when it remains on float-charge for several weeks. For additional information on battery sizing considerations refer to IEEE 485, *Recommended Practice for Sizing Lead-Acid Batteries for Stationary Applications*.

10.6.7.2.1.2 The secondary power supply for in-building fire emergency voice/alarm communications service shall be capable of operating the system under quiescent load for a minimum of 24 hours and then shall be capable of operating the system during a fire or other emergency condition for a period of 15 minutes at maximum connected load.

N **10.6.7.2.1.3** The secondary power supply capacity for supervising station facilities and equipment shall be capable of supporting operations for a minimum of 24 hours.

10.6.7.2.1.4 The secondary power supply for high-power loudspeaker arrays used for wide-area mass notification systems shall be in accordance with 24.6.5.2.

10.6.7.2.1.5 The secondary power supply for textual visual notification appliances shall be in accordance with 24.6.10.1.

10.6.7.2.1.6 The secondary power supply capacity for emergency command centers of a wide-area mass notification systems shall be capable of supporting operations for a minimum of 24 hours.

10.6.7.2.1.7 The secondary power supply for in-building mass notification systems shall be capable of operating the system under quiescent load for a minimum of 24 hours and then shall be capable of operating the system during emergency conditions for a period of 15 minutes at maximum connected load.

10.6.7.2.2 The secondary power supply capacity required shall include all power supply loads that are not automatically disconnected upon the transfer to secondary power supply.

FAQ

What should the battery calculation include?

The calculation for the proper amount of battery standby capacity should include the normal standby supervisory quiescent load of all modules in the control unit — as well as all devices, initiating, notification, and auxiliary devices connected to the control unit — for a specified period of time, in addition to the load during the specified period of alarm. Specific requirements are included in the paragraphs of 10.6.7.2.1, depending on the application and equipment involved.

Paragraph 10.6.7.2.1.1 includes a requirement for a 20 percent safety factor to be added to all battery calculations, which recognizes that battery output will decrease over the life of the battery.

Although a minimum capacity of 15 minutes while operating under fire or other emergency conditions at maximum connected load is specified in 10.6.7.2.1.2, the system is still intended to remain available to operate during a fire for 2 hours in accordance with the survivability requirements in 24.3.14 and Section 12.4. The expected load during actual operation of the system would be distributed over the 2-hour period.

Paragraphs 10.6.7.2.1.4 through 10.6.7.2.1.7 involve requirements for mass notification systems. The secondary power supply for high power loudspeaker arrays must have a minimum of 3-day standby capacity followed by 60 minutes of full load capacity. The secondary power supply capacity for textual visual appliances must have the capacity to support a minimum of 2 hours of continuous display time. The secondary power supply for emergency command centers must have a capacity to support operations for at least 24 hours.

If combination systems are used, the secondary supply must be able to power the entire system for the required 24-hour period. Other loads, such as security or building management systems, must be figured into the secondary power calculations unless those loads are disconnected automatically on transfer to secondary power in accordance with 10.6.7.2.2.

A sample battery calculation is shown in Exhibit 10.1 for a modestly sized local fire alarm system. Many of the fire alarm and emergency equipment manufacturers include spreadsheets on their websites that allow for the calculation of standby and alarm time using their equipment.

NFPA 720

N

10.6.7.2.3* Where carbon monoxide detection is not monitored by a supervising station, the secondary power supply shall have sufficient capacity to operate the carbon monoxide detection system under quiescent load (system operating in a nonalarm condition) for a minimum of 24 hours and, at the end of that period, shall be capable of operating the carbon monoxide detection system and all carbon monoxide notification appliances for 12 hours.

EXHIBIT 10.1

ITEM	DESCRIPTION	STANDBY CURRENT PER UNIT (AMPS)		QTY		STANDBY CURRENT PER UNIT (AMPS)	ALARM CURRENT PER UNIT (AMPS)		QTY		SYSTEM ALARM CURRENT (AMPS)
A	FACU	0.1200	X	1	=	0.1200	1.5000	X	1	=	1.5000
B	Smoke Det	0.0005	X	42	=	0.0210	0.0010	X	42	=	0.0420
C	Duct Det	0.0005	X	16	=	0.0080	0.0010	X	16	=	0.0160
D	A/V	none	X	14	=	none	0.0950	X	14	=	1.33
E	Visual	none	X	6	=	none	0.0720	X	6	=	0.4320
F	Relay	0.0070	X	4	=	0.0280	none	X	4	=	none
			X		=			X		=	
			X		=			X		=	
			X		=			X		=	
			X		=			X		=	
		TOTAL SYSTEM STANDBY CURRENT (AMPS)				0.1770	TOTAL SYSTEM ALARM CURRENT (AMPS)				3.32

REQUIRED OPERATING TIME OF SECONDARY POWER SOURCE FROM NFPA 72 10.6.7.2.1

STANDBY: 24 HOURS ALARM: 5 MINUTES × 1/60 0.0833 HOURS

REQUIRED STANDBY TIME (HOURS)		TOTAL SYSTEM STANDBY CURRENT (AMPS)		REQUIRED STANDBY CAPACITY (AMP-HOURS)	REQUIRED ALARM TIME (HOURS)		TOTAL SYSTEM ALARM CURRENT (AMPS)		REQUIRED ALARM CURRENT (AMP-HOURS)
24	X	0.1770	=	4.2480	0.0833	X	3.32	=	.2766

REQUIRED STANDBY CAPACITY (AMP-HOURS)		REQUIRED ALARM CAPACITY (AMP-HOURS)		TOTAL REQUIRED CAPACITY (AMP-HOURS)		FACTOR OF SAFETY		REQUIRED BATTERY CAPACITY (AMP-HOURS)
4.2480	+	.2766	=	4.5246	X	1.2		5.43

Sample Battery Calculation.

This text had been in NFPA 720. It was revised to limit the required 12 hours of notification appliance operation to appliances used for CO notification, which is consistent with the requirements of NFPA 720, 2015 edition.

N **A.10.6.7.2.3** For combination systems, such as a combination carbon monoxide and fire alarm system, where the carbon monoxide notification appliances are capable of being operated separately from the fire alarm system notification appliances, only the carbon monoxide notification appliances are required to operate for 12 hours.

N **10.6.7.2.4** Where carbon monoxide detection is monitored by a supervising station, the secondary power supply shall have sufficient capacity to operate the carbon monoxide detection system under quiescent load (system operating in a nonalarm condition) for a minimum of 24 hours and, at the end of that period, shall be capable of operating the carbon monoxide detection system and all notification appliances for 5 minutes.

NFPA 720

The text incorporates the secondary power supply requirements formerly in NFPA 720.

10.6.7.3* Secondary Power Supply for Protected Premises Fire Alarm Systems and Emergency Communications Systems.

A.10.6.7.3 The secondary power supply is not required to supply power to the fire alarm system through parallel distribution paths. Automatic transfer switches are commonly used to allow secondary power to be supplied over the same distribution system as the primary power.

The generator does not need to be dedicated to the fire alarm system.

10.6.7.3.1 The secondary power supply shall consist of one of the following:

(1) A storage battery dedicated to the system arranged in accordance with 10.6.10
(2) An automatic-starting, engine-driven generator serving the branch circuit specified in 10.6.5.1 and arranged in accordance with 10.6.11.3.1, and storage batteries dedicated to the system with 4 hours of capacity arranged in accordance with 10.6.10

Paragraph 10.6.7.3.1(2) recognizes that power from the automatic-starting, engine-driven generator is typically supplied upstream of the branch circuit supplying primary power and that a separate branch circuit is not required.

Where an automatic-starting, engine-driven generator is used as the secondary power supply, it must comply with 10.6.11.3.1 and be part of an emergency power system in accordance with Article 700 of the *NEC*. Four hours of battery capacity are required to power the fire alarm/ECS in case the engine-driven generator fails to start, allowing time for the generator to be serviced or repaired.

10.6.7.3.2 Secondary circuits that provide power to the control unit and are not integral to the unit shall be protected against physical damage.

The requirement for mechanical protection in 10.6.5.3 for the branch circuit of the primary power supply also applies to external circuits that supply secondary power. All supply circuits that are not part of the control unit must be protected against physical damage. Also refer to the FAQ following 10.6.5.4.

10.6.7.4 Secondary Power Supply for Supervising Station Facilities.

10.6.7.4.1 The secondary power supply shall consist of one of the following:

(1) Storage batteries dedicated to the supervising station equipment arranged in accordance with 10.6.10
(2) A branch circuit of an automatic-starting, engine-driven generator arranged in accordance with 10.6.11.3.2.1 and 10.6.11.3.2.2, and storage batteries dedicated to the supervising station equipment with 4 hours of capacity arranged in accordance with 10.6.10
(3) A branch circuit of multiple engine-driven generators, at least one of which is arranged for automatic starting in accordance with 10.6.11.3.2.1 and 10.6.11.3.2.2

The requirements for supervising station facilities in 10.6.7.4.1(1) and 10.6.7.4.1(2) are similar to those for protected premises. By reference to 10.6.11.3.2 as compared to 10.6.11.3.1, an automatic-starting, engine-driven generator used as the secondary power supply does not need to be part of an emergency power system, but it must be part of a legally required standby power system in accordance with Article 701 of the *NEC*. In addition, the reference to NFPA 110, *Standard for Emergency and Standby Power Systems*, and specification of Type 60 versus Type 10 require a 60-second start instead of a 10-second start.

The use of multiple engine-driven generators, where one generator is automatic starting and the other(s) can be arranged for a manual start, is an option for secondary power at supervising station facilities, given the continual nature of these operations, 24 hours a day, 7 days a week. Additional requirements are imposed in 10.6.7.4.2, and compliance with NFPA 110 is required.

10.6.7.4.2 Where a secondary power supply for supervising station facilities in accordance with 10.6.7.4.1(3) is used, the following shall apply:

(1) Each generator shall be capable of supplying the energy required.
(2) Generators that are started manually shall be arranged in accordance with 10.6.11.3.2.3 and 10.6.11.3.2.4.
(3) When manual-start generators are employed, a person trained in the procedure of starting the generator shall be on duty at all times.

10.6.8 Power Supply for Remotely Located Control Equipment.

10.6.8.1* Additional power supplies required for system operation shall comply with 10.6.1 through 10.6.6 and with 10.6.9.

This requirement was revised for the 2016 edition of the Code to ensure that any power supply associated with system operation meets the requirements of power supplies for protected premises, supervising stations, public emergency alarm reporting systems, and ECSs. These power supplies, although not primary, are often key interfaces for the system. They need to have the same requirements in order to maintain the operation of the system during an emergency condition.

A.10.6.8.1 Examples include the following:

(1) A building lighting power supply required for illumination in a required video image smoke detection means
(2) A notification appliance circuit power supply located remotely
(3) A power supply for transmitter required to transmit signals off premises
(4) Power over ethernet (PoE), where provided for control units, circuit interfaces, or other equipment essential to system operation, and located remotely from the main control unit

10.6.8.2 The location of remotely located power supplies shall be identified at the master control unit.

10.6.8.3 The master control unit display shall be permitted to satisfy the requirement of 10.6.8.2.

10.6.8.4 The location of remotely located power supplies shall be identified on the record drawings.

Paragraphs 10.6.8.2 and 10.6.8.4 require that the location of all remotely located power supplies be identified at the master control unit and on the record drawings. In accordance with 10.6.8.3, identification at the master control unit can be accomplished on the master control unit display itself.

10.6.9 Monitoring Integrity of Power Supplies.

10.6.9.1 Unless otherwise permitted or required by 10.6.9.1.3 and 10.6.9.1.6, all primary and secondary power supplies shall be monitored for the presence of voltage at the point of connection to the system.

10.6.9.1.1 Failure of either the primary or secondary power supply shall result in a trouble signal in accordance with Section 10.15.

10.6.9.1.2 Power failure indication for a digital alarm communicator transmitter (DACT) powered from a protected premises fire alarm system control unit shall be in accordance with 10.6.9.1.

10.6.9.1.3 Monitoring shall not be required for a power supply for supplementary equipment.

10.6.9.1.4 Monitoring shall not be required for the neutral of a three-, four-, or five-wire ac or dc supply source.

10.6.9.1.5 Monitoring shall not be required for the main power supply in a supervising station if its failure is otherwise indicated and obvious to the operator on duty.

10.6.9.1.6 Monitoring shall not be required for the output of an engine-driven generator that is part of the secondary power supply, provided the generator is tested weekly in accordance with Chapter 14.

When an engine-driven generator is not running, voltage will not be present on the output terminals. Therefore, monitoring for integrity is impossible.

10.6.9.2* Power supply sources and electrical supervision for digital alarm communications systems shall be in accordance with Section 10.6, 10.6.9, Section 10.19, and Section 12.6.

A.10.6.9.2 Because digital alarm communicator systems establish communications channels between the protected premises and the central station via the public switched telephone network, the requirement to supervise circuits between the protected premises and the central station *(see 12.6.1 and 12.6.2)* is considered to be met if the communications channel is periodically tested in accordance with 26.6.4.1.5.

10.6.9.3* Supervising station alarm systems shall be arranged to delay transmission of primary power failure signals for 60 minutes to 180 minutes unless a delay is not permitted by the authority having jurisdiction.

A.10.6.9.3 This requirement is intended to prevent all of the supervising station alarm systems in a given geographic area from transmitting simultaneous trouble signals (and overwhelming

the associated supervising stations) in the event of a widespread power failure. A trouble signal is not intended to be transmitted if primary power is restored within the time delay.

All supervising station alarm systems are required to transmit primary power failure signals no sooner than 60 minutes from initial power failure and no later than 180 minutes from initial power failure unless a delay is prohibited by the authority having jurisdiction. This requirement applies to any communications method. It prevents jamming of telephone lines or other transmission channels at the supervising station during the first hour of a widespread power outage. This is usually just a simple programming change in the system control equipment and allows for a reduction in unnecessary signals being sent to the supervising station.

10.6.9.4 Power supervisory devices used to monitor the integrity of power supplies shall not impair the receipt of fire alarm or supervisory signals.

10.6.10* Storage Batteries.

A.10.6.10 The valve-regulated lead-acid (VRLA) battery type of rechargeable battery is currently used in protected premises applications.

This rechargeable-type battery is generally used in place of primary batteries in applications that have a relatively high current drain or that require the extended standby capability of much lower currents. The nominal voltage of a single starved electrolyte cell is 2 volts, and the battery is available in multiples of 2 volts (e.g., 2, 4, 6, 12). Batteries should be stored according to the battery manufacturer's published instructions. These batteries are often incorrectly referred to as "sealed lead-acid," "gel" or "maintenance-free batteries."

There are two technologies available. The most common type is referred to as "absorbed glass mat" or AGM. In this technology, the electrolyte is immobilized by being absorbed into fiberglass mats that surround the plates. Nearly all VRLA batteries in use in U.S. fire protection applications are AGM.

The second technology is referred to as gelled electrolyte. In this technology, the electrolyte is immobilized in a silica gel. This technology is predominately seen in European applications. While some manufacturers refer to the battery as a gel battery in the literature, this needs to be confirmed by the technician. Gel batteries require higher float voltages than AGM, and floating an AGM battery at gel voltages will shorten the battery life.

Subsection A.10.6.10 was revised for the 2019 edition to coincide with the removal of unused battery types from Chapter 14. VRLA batteries are well suited for providing secondary power in fire alarm system applications, as both gelled and AGM technologies are acid-starved — a condition that provides plate protection during deep discharge. With little liquid electrolyte, VRLA batteries are non-spillable, and their recombination reaction prevents the escape of hydrogen and oxygen gases. They have been referred to as "sealed" because they are sealed, with the exception of a pressure relief valve that opens to relieve excess internal pressure. They are also referred to as "maintenance free" because the electrolyte is inaccessible — but they are not completely maintenance free.

10.6.10.1 Marking.

10.6.10.1.1 Batteries shall be marked with the month and year of manufacture using the month/year format.

10.6.10.1.2 Where the battery is not marked with the month/year by the manufacturer, the installer shall obtain the date-code and mark the battery with the month/year of battery manufacture.

FAQ

What format must be used to mark the date of manufacture on the battery?

Paragraph 10.6.10.1.1 requires that batteries be marked with the month and year of manufacture, using the month/year format. Thus, a battery that is manufactured in February of 2019 must be marked 02/2019 or 2/19. Exhibit 10.2 depicts a typical battery installation with the date marked on the batteries in month/year format. This does not require the manufacturer to mark the battery in this format. The manufacturer may choose to use a date code. If this is the case, 10.6.10.1.2 requires that the installer then translate the date code into the required format and mark the battery accordingly. Manufacturers can provide documentation to the installers of batteries and enforcing authorities so the manufacture date of the battery can be verified.

10.6.10.2 Arrangement.

Battery gases can cause severe corrosion of terminals and contacts in equipment enclosures. VRLA batteries are generally permitted inside control units; however, vented lead-acid batteries are not permitted inside control units. See Exhibit 10.3 for an example of VRLA batteries. If large batteries are necessary, a separate battery cabinet, as shown in Exhibit 10.4, could be required to adequately house the batteries. If batteries are located remotely from the control unit, 10.6.10.2.7 requires that the location be identified at the control unit.

10.6.10.2.1 Storage batteries shall comply with the requirements of Article 480 of *NFPA 70*.

10.6.10.2.2 Storage batteries shall be located so that the equipment, including overcurrent devices, is not adversely affected by battery gases.

10.6.10.2.3 Batteries shall be insulated against ground faults.

10.6.10.2.4 Batteries shall be insulated to prevent short circuits between multiple cells.

10.6.10.2.5 Batteries shall be protected from physical damage.

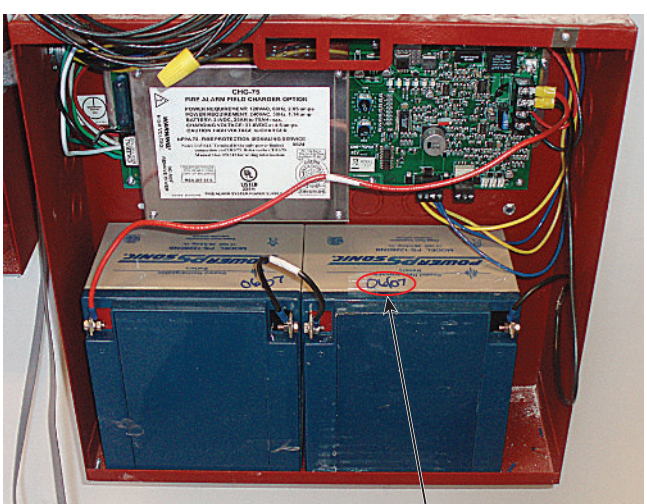

EXHIBIT 10.2

Typical Battery Installation with Batteries Marked in Month/Year Format. (Courtesy of Jeffrey Moore, P.E., JENSEN HUGHES)

EXHIBIT 10.3

Valve-Regulated Lead-Acid (VRLA) Batteries. (Source: Power-Sonic Corp., San Diego, CA)

EXHIBIT 10.4

Separate Battery Cabinet. (Source: Space Age Electronics, Inc., Sterling, MA)

10.6.10.2.6 Battery racks shall be protected against corrosion.

10.6.10.2.7 If not located in or adjacent to the control unit, the batteries and their charger location shall be permanently identified at the control unit.

The identification of the location of remotely located batteries or chargers, or both, simplifies system inspections and tests. Long runs of conductors to remote batteries can create unacceptable voltage drops that can affect system performance. Voltage drop calculations must be conducted to ensure that the system has adequate voltage under full load.

10.6.10.3 Battery Charging.

10.6.10.3.1 Battery charging equipment shall be provided to keep the battery fully charged under normal conditions.

10.6.10.3.2 Battery charging equipment shall be provided to recharge batteries within 48 hours after fully charged batteries have been subject to a single discharge cycle as specified in 10.6.7.2.

Unless the capacity of the battery charger has been carefully selected, systems with large batteries may have difficulty meeting this requirement. The manufacturer's data sheets should provide maximum charging capabilities.

10.6.10.3.3 The battery charging equipment operation shall not damage the battery.

10.6.10.3.4* Batteries shall be charged by listed means.

A.10.6.10.3.4 The circuitry and methods for charging batteries of various types are to be evaluated by a nationally recognized testing laboratory to ensure they are appropriate for the purpose. During primary power use, batteries are trickle-charged if they are off-line and waiting to be put under load in the event of a loss of power.

Float-charged batteries are fully charged and connected across the output of the rectifiers to smooth the output and to serve as a standby source of power in the event of a loss of line power. Other charging methods are used to restore capacity to a battery after it has been utilized during a loss of primary power.

10.6.10.3.5 Provisions for repair or replacement of failed battery charger equipment shall be maintained at supervising stations and used to restore operation prior to depletion of one-half of the battery capacity.

10.6.10.4 Overcurrent Protection. Overcurrent devices shall be provided to protect the batteries from excessive load current.

Overcurrent protection is typically built into the alarm control equipment by the manufacturer.

10.6.10.5 Metering. The battery charging equipment shall include integral meters or readily accessible terminals so that portable meters can be used to determine battery voltage and charging current.

10.6.10.6 Monitoring Integrity of Battery Charging Equipment.

10.6.10.6.1 Means shall be provided to detect the failure of a battery charger.

10.6.10.6.2 Failure of the battery charger shall result in a trouble signal in accordance with Section 10.15.

The battery charging circuits of all systems are required to be monitored and to produce a trouble signal on failure. Requirements for monitoring the integrity of power supplies are in 10.6.9.

10.6.11 Engine-Driven Generators.

Subsection 10.6.11 applies when the power for the system is supplied from an engine-driven generator. The requirements for secondary power supplies in 10.6.11.3 relate to the requirements for secondary power supplies in 10.6.7 and are organized into separate sections for the protected premises fire alarm systems and ECSs (see 10.6.7.3) and for supervising station facilities (see 10.6.7.4). NFPA 110 applies when engine-driven generators are used for the secondary power supply. The requirements in NFPA 110 are specified using the following terms:

1. *Type* — Start-up time (in seconds) of the secondary source to be available or the ability to transfer from primary to secondary automatically versus manually [see 10.6.7.4.1(3)].
2. *Class* — The amount of time in hours that the system can be operated at rated load without being refueled.
3. *Level* — Level 1 is more stringent and is used where equipment failure could result in the loss of life or serious injuries; Level 2 is used where equipment failure is less critical.

NFPA 72 specifies the appropriate classifications in 10.6.11.3 to correlate with the designations in NFPA 110. The requirements in NFPA 110 address the performance, installation, maintenance, operation, and testing requirements for the emergency power supply system. The requirements in the *NEC* address the complete electrical installation, including these (and other) sources of power, as well as the equipment used to distribute and control power from these systems when the normal supply is interrupted.

10.6.11.1 Application and Installation. The application and installation of engine-driven generators shall be as specified in 10.6.11.2 through 10.6.11.7.

10.6.11.2 Primary Power Supply.

10.6.11.2.1 Engine-driven generators arranged as the primary supply shall be designed in an approved manner.

10.6.11.2.2 Engine-driven generators arranged as the primary supply shall be installed in an approved manner.

10.6.11.3 Secondary Power Supplies.

10.6.11.3.1 Protected Premises.

10.6.11.3.1.1 Engine-driven generators used to provide secondary power for a protected premises fire alarm system or an emergency communications system shall comply with NFPA 110 Chapter 4, requirements for a Type 10, Class 24, Level 1 system.

10.6.11.3.1.2 Installation of engine-driven generators used to provide secondary power for a protected premises fire alarm system or an emergency communications system shall be in accordance with *NFPA 70*, Article 700.

10.6.11.3.1.3 Where survivability of circuits is required by another section of the Code, equal protection shall be provided for power supply circuits.

10.6.11.3.2 Supervising Station.

10.6.11.3.2.1 Automatic-starting, engine-driven generators used to provide secondary power for a supervising station shall comply with NFPA 110 Chapter 4, requirements for a Type 60, Class 24, Level 2 system.

10.6.11.3.2.2 Installation of automatic-starting, engine-driven generators used to provide secondary power for a supervising station shall be in accordance with *NFPA 70* Article 701.

10.6.11.3.2.3 Manual-starting, engine-driven generators used to provide secondary power for a supervising station shall comply with NFPA 110 Chapter 10, requirements for a Type M, Class 24, Level 2 system.

10.6.11.3.2.4 Installation of manual-starting, engine-driven generators used to provide secondary power for a supervising station shall be in accordance with *NFPA 70*, Article 702.

10.6.11.4 Performance, Operation, Testing, and Maintenance. The requirements for performance, operation, testing, and maintenance of engine-driven generators shall conform to the applicable provisions of NFPA 110.

FAQ

What document provides testing requirements for engine-driven generators?

NFPA 110 provides requirements for initial acceptance as well as periodic testing of engine-driven generators. The manufacturer's equipment data sheets should provide fuel consumption rates for the engine-driven generator.

10.6.11.5 Capacity. The unit shall be of a capacity that is sufficient to operate the system under the maximum normal load conditions in addition to all other demands placed upon the unit.

10.6.11.6 Fuel. Unless otherwise required or permitted in 10.6.11.6.1 through 10.6.11.6.3, fuel shall be available in storage sufficient for 6 months of testing plus the capacity specified in 10.6.7.

10.6.11.6.1 For public emergency alarm reporting systems, the requirements of Chapter 27 shall apply.

10.6.11.6.2 If a reliable source of supply is available at any time on a 2-hour notice, it shall be permitted to have fuel in storage sufficient for 12 hours of operation at full load.

10.6.11.6.3 Fuel systems using natural or manufactured gas supplied through reliable utility mains shall not be required to have fuel storage tanks unless located in seismic risk zone 3 or greater as defined in ANSI A-58.1, *Building Code Requirements for Minimum Design Loads in Buildings and Other Structures*.

10.6.11.7 Battery and Charger.

N **10.6.11.7.1** A separate storage battery and separate automatic charger shall be provided for starting the engine-driven generator and shall not be used for any other purpose.

N **10.6.11.7.2** The battery shall be sized in accordance with 5.6.4 of NFPA 110.

10.7 Signal Priority.

The priority of signals shall be in accordance with this section.

The term *signal* is defined in 3.3.263 as "an indication of a condition communicated by electrical, visible, visual, audible, wireless, or other means." Definitions of the terms *alarm signal, carbon monoxide signal, fire alarm signal, supervisory signal*, and *trouble signal*, among others, are included as subdefinitions. Each signal has a specific purpose, each elicits a different response, and with few exceptions, each type of signal must be treated separately. This includes the maintenance of separate circuits for each type of signal or the ability to process information transmitted over circuits, so that signal priority and distinction can be maintained in accordance with Sections 10.7 and 10.10, and signals can be responded to in accordance with Section 10.9.

ECS signaling terms are also used in the Code. These terms include *ECS priority signals*, *emergency mass notification signals*, and *priority alarms*. These terms are not specifically defined in the Code. The meaning of these terms must be taken from the context of their usage.

The Code recognizes the importance of CO signals and permits this type of signal to take precedence over supervisory and trouble signals. The term *carbon monoxide alarm signal* is defined in 3.3.263.2. In addition, pre-alarm signals are recognized in the signal priority hierarchy and take precedence over supervisory and trouble signals. The term *pre-alarm signal* is defined in 3.3.263.7, and the term *pre-alarm condition* is defined in 3.3.61.1.2.

10.7.1 ECS priority signals when evaluated by stakeholders through a risk analysis in accordance with 24.3.12 shall be permitted to take precedence over all other signals.

10.7.2 Fire alarm signals shall take precedence over all other signals, except as permitted by 10.7.1 or 10.7.3.

10.7.3* Emergency mass notification signals and messages shall be permitted to have priority over fire alarm notification signals in accordance with the requirements of Chapter 24.

A.10.7.3 Mass notification signals might, at times, be more important to the building or area occupants than the fire alarm signal. Stakeholders should perform a risk analysis in accordance with 24.3.12 to determine which, if any, messages should receive priority.

10.7.4 Emergency mass notification signals and messages shall have priority over supervisory and trouble signals in accordance with the requirements of Chapter 24.

10.7.5 Carbon monoxide signals shall be permitted to take precedence over supervisory and trouble signals.

10.7.6 Pre-alarm signals shall take precedence over supervisory and trouble signals.

10.7.7 Supervisory signals shall take precedence over trouble signals.

10.7.8 Hold-up alarms or other life-threatening signals shall be permitted to take precedence over supervisory and trouble signals where acceptable to the authority having jurisdiction.

10.7.9* Where separate systems are installed, they shall be permitted to achieve the priority of signals in accordance with Section 10.7.

A.10.7.9 In addition, the override of circuits should be indicated at the control panel of each system to ensure signals are restored to normal.

Subsection 10.7.1 permits an ECS priority signal to take priority over a fire alarm signal if the stakeholders of the system, including the authority having jurisdiction, have determined after the risk analysis detailed in 24.3.12 that the ECS priority signal for the protected premises must have priority over the fire alarm signal. The ECS priority signal may be for an emergency that is determined to be more critical than a fire alarm signal, such as an attack on the building and its occupants by terrorist shooters. Not all ECS signals are ECS priority signals. This distinction should be addressed as a part of the risk assessment required in Chapter 24. Subsections 10.7.2 through 10.7.8 further establish the relative priority of fire alarm signals, emergency mass notification signals, CO signals, life-threatening signals, pre-alarm signals, supervisory signals, and trouble signals.

Signal priority requirements are also addressed for combination fire alarm systems in 23.8.4.7 and for various types of ECSs throughout Chapter 24.

10.8 Detection and Signaling of Conditions.

Sections 10.8 and 10.9 clarify the difference between various types of signals, the conditions that they represent, and the actions that are intended in response to these signals. For example, an alarm signal is often (correctly) thought of as the audible occupant notification signal that occurs throughout the occupancy in response to the detection of a fire or other emergency. However, it can also be just the electrical signal that represents or conveys the alarm message in the system. A *signal* is defined in 3.3.263 as "an indication of a condition communicated by electrical, visible, visual, audible, wireless, or other means." Some occupancies are not required to have occupant notification. Thus, it is possible to have an alarm signal without occupant notification. The defined terms *signal*, *condition,* and *response* in 3.3.263, 3.3.61, and 3.3.250, along with the requirements in Sections 10.8 and 10.9, provide a foundation for the Code to be more precise in specifying the intended response to a particular condition.

10.8.1 Abnormal Condition Detection. Where required by this Code, the system shall be provided with means to detect and signal abnormal conditions.

10.8.2 Alarm Condition Detection. Where required by this Code, the system shall be provided with means to detect and signal alarm conditions.

10.8.2.1 Pre-Alarm Condition Detection. Where required by this Code, the system shall be provided with means to detect and signal pre-alarm conditions.

10.8.2.2 Supervisory Condition Detection. Where required by this Code, the system shall be provided with means to detect and signal supervisory conditions.

10.8.2.3 Trouble Condition Detection. Where required by this Code, the system shall be provided with means to detect and signal trouble conditions.

10.8.2.4 Normal Condition Detection. Where required by this Code, the system shall generate a restoration signal when the device or signaling system returns to normal.

10.9 Responses.

10.9.1 Alarm. The response to an alarm signal shall be in accordance with this Code.

10.9.2 Pre-Alarm. The response to a pre-alarm signal shall be in accordance with this Code.

10.9.3 Supervisory. The response to a supervisory signal shall be in accordance with this Code.

10.9.4 Trouble. The response to trouble signal shall be in accordance with this Code.

10.10 Distinctive Signals.

Priority alarms or ECS priority signals from mass notification systems are included in the list of signals that can be installed at a protected premises in addition to the traditional signals from a fire alarm system.

10.10.1 Priority alarm signals, fire alarm signals, carbon monoxide alarm signals, supervisory signals, pre-alarm signals, and trouble signals shall be distinctively and descriptively annunciated. NFPA 720

All alarm, pre-alarm, supervisory, and trouble signals must be distinctively annunciated. The typical means of accomplishing this is on the display at the control unit. It could also be accomplished with a separate annunciator panel. It is critical that signal descriptions are sufficiently detailed, providing a clear indication of the condition being annunciated. Where possible, abbreviations should be kept to a minimum or standardized. These features are especially important when both mass notification system signals and fire alarm system signals are included in the system design. Refer to 10.10.4 and A.10.10.4 for additional requirements for, and an explanation of, control unit signals.

10.10.2 Audible alarm notification appliances for a fire alarm system shall produce signals that are distinctive from other similar appliances used for other purposes in the same area that are not part of the fire alarm or emergency communications system.

Notification appliances used for the fire alarm system or ECS must produce signals that are distinctive from the signals produced by notification appliances of other systems in the same area.

10.10.3 Audible alarm notification appliances for a carbon monoxide alarm system shall produce signals that are distinctive from other similar appliances used for other purposes in the same area that are not part of the carbon monoxide, fire alarm, or emergency communications system.

Combination fire alarm systems can include CO detection and notification. Subsection 10.10.3 recognizes that audible appliances used to provide notification for a CO alarm must produce a signal that is distinct from other signals. The specific audible notification signal pattern that must be used differs from that required for an alarm evacuation signal (see 10.10.7). Information formerly in NFPA 720 has been added to *NFPA 72* and includes a distinct audible signal for CO. Refer to Chapter 18 for distinctive CO alarm signals under 18.4.3 and Figure 18.4.3.2.

10.10.4* An audible notification appliance on a control unit, on multiple control units that are interconnected to form a system, or at a remote location, shall be permitted to have the same audible characteristics for all alerting functions including, but not limited to, alarm, trouble, and supervisory, provided that the distinction between signals shall be by other means.

A.10.10.4 Control unit signals can be audible, visual, or both for any particular function. Some older systems used only audible indicators that had to be coded for users to know what the signal meant. Where a control unit uses both audible and visual indicators, the purpose of the audible signal is to get someone's attention. In large system configurations, there might be multiple control units with audible signals. Also, there might be several different functions requiring an audible alert as a part of the whole signal. Thus, there could be several different audible signals. It is not the intent of this Code to have separate and distinct audible signals where clear visual distinction provides the user with the needed information. Visual signals, whether a lamp with a text label, an LCD screen, a computer monitor, or other textual visual appliances, are better forms of human interface.

The alarm, supervisory, CO, and trouble signals on a control unit or on multiple control units of the same system are permitted to have the same audible characteristics, as long as the different signals are distinctively indicated by other appropriate means, such as an LED or LCD message.

10.10.5* Supervisory signals shall be distinctive in sound from other signals, and their sound shall not be used for any other purpose except as permitted in 10.10.4.

A.10.10.5 A valve supervisory, a low-pressure switch, or another device intended to cause a supervisory signal when activated should not be connected in series with the end-of-line supervisory device of initiating device circuits, unless a distinctive signal, different from a trouble signal, is indicated.

10.10.6 Trouble signals required to indicate at the protected premises shall be indicated by distinctive audible signals, which shall be distinctive from alarm signals except as permitted in 10.10.4.

Distinctive audible signals are required for supervisory and trouble signals in accordance with 10.10.5 and 10.10.6, respectively. However, both subsections refer to 10.10.4, which permits a common audible signal as long as signal distinction is indicated by other appropriate means, such as an LED or LCD message.

10.10.7 Alarm evacuation signals shall be distinctive in sound from other signals, shall comply with the requirements of 18.4.2, and their sound shall not be used for any other purpose.

Alarm signals used to notify occupants of the need to evacuate must produce the distinctive emergency evacuation signal required by 18.4.2.

10.10.8 Pre-alarm signals shall be distinctive in sound from other signals, and their sound shall not be used for any other purpose except as permitted in 10.10.4.

Signals for pre-alarm conditions are expressly permitted on systems. The response to a pre-alarm signal should result in an investigation of the cause of the pre-alarm condition. The need for an alarm signal or response may not be justified at the initial receipt of the pre-alarm signal. Refer to the defined terms *pre-alarm condition*, *pre-alarm signal*, and *pre-alarm response* in 3.3.61.1.2, 3.3.263.7, and 3.3.250.2.

N **10.10.9** Carbon monoxide alarm signals shall comply with 18.4.4.2.

NFPA 720

10.11 Alarm Signals.

10.11.1* Actuation of alarm notification appliances or emergency voice communications, emergency control function interface devices, and annunciation at the protected premises shall occur within 10 seconds after the activation of an initiating device.

NFPA 72 is not specific about the response time for the interfaced system(s) to operate as required. Subsection 10.11.1 requires that actuation of alarm notification appliances or emergency voice communications, emergency control function interface devices, and annunciation at the protected premises occur within 10 seconds after the activation of an initiating device.

This requirement ensures that the operation of notification appliances, emergency voice communications, and emergency control function interface devices occur in a timely manner. As interfaces for systems such as smoke control systems become more complicated, the complexity should not hinder the response time of the system.

A.10.11.1 Activation of an initiating device is usually the instant at which a complete digital signal is achieved at the device, such as a contact closure. For smoke detectors or other automatic initiating devices, which can involve signal processing and analysis of the signature of fire phenomena, activation means the instant when the signal analysis requirements are completed by the device or fire alarm control unit software.

A separate fire alarm control unit contemplates a network of fire alarm control units forming a single large system as defined in Section 23.8.

For some analog initiating devices, activation is the moment that the fire alarm control unit interprets that the signal from an initiating device has exceeded the alarm threshold programmed into the fire alarm control unit.

For smoke detectors working on a system with alarm verification, where the verification function is performed in the fire alarm control unit, the moment of activation of smoke detectors is sometimes determined by the fire alarm control unit.

It is not the intent of this paragraph to dictate the time frame for the local fire safety devices to complete their function, such as fan wind-down time, door closure time, or elevator travel time.

10.11.2* VisibleVisual notification appliances, textual visible visual notification appliances, and loudspeaker notification appliances located in the same area shall be activated and deactivated as a group unless otherwise required by an ECS emergency response plan. (SIG-ECS)

A.10.11.2 The intent of this requirement is to ensure that persons who are deaf or hard of hearing are alerted to seek additional information regarding an emergency situation. Persons who are deaf or hard of hearing are not always alerted by the loudspeakers that provide evacuation tones or voice instructions. It is intended that the loudspeakers and visual notification appliances located in the same area be activated together whenever tones, recorded voice instructions, or live voice instructions are being provided. (SIG-ECS)

Δ **10.11.3** Visual alarm notification appliances shall not be activated when loudspeaker notification appliances are used as permitted by 24.3.5 for non-emergency paging. (SIG-ECS)

10.11.4* A coded alarm signal shall consist of not less than three complete rounds of the number transmitted.

Δ ***TABLE A.10.11.4*** *Recommended Coded Signal Designations*

Location	*Coded Signal*
Fourth floor	2–4
Third floor	2–3
Second floor	2–2
First floor	2–1
Basement	3–1
Sub-basement	3–2

A.10.11.4 The recommended coded signal designations for buildings that have four floors and multiple basements are provided in Table A.10.11.4.

10.11.5 Each round of a coded alarm signal shall consist of not less than three impulses.

Subsections 10.11.4 and 10.11.5 refer to a coded signal. The term *coded* is defined in 3.3.51 as "an audible or visual signal that conveys several discrete bits or units of information." A coded signal is meant to notify personnel of the nature or origin of the signal. Table A.10.11.4 provides recommended assignments for simple zone-coded signals. In addition to the examples described in Table A.10.11.4, textual audible signals may use words that are familiar only to those concerned with response to the signal. This practice avoids general alarm notification and disruption of the occupants. Hospitals often use this type of signal. For example, to hospital occupants who do not know the code words, the message "Paging Dr. Firestone, Dr. Firestone, Building 4 West Wing" might sound like a normal paging announcement, but the coded message is that there is a fire in the West Wing of Building 4. In effect, this is private mode signaling (see 18.4.5).

Subsection 10.11.4 requires that on activation, the code will sound at least three times, alerting the users of the alarm location. A coded system should not be confused with the requirements of 18.4.2.1. Also see 29.5.1 and the requirements of ANSI/ASA S3.41, *American National Standard Audible Emergency Evacuation (E2) and Evacuation Signals with Relocation Instructions (ESRI)*.

10.11.6* Resetting of alarm signals shall comply with 23.8.2.2.

A.10.11.6 Resetting of alarm signals should not require the simultaneous operation of multiple reset switches or the disconnection of any wiring or equipment to reset the alarm condition.

10.11.7 The subsequent occurrence of a fault on an initiating device circuit or a signaling line circuit used for other than the interconnection of control units shall not affect previously transmitted unacknowledged alarm signals.

10.11.8 An alarm signal that has been deactivated at the protected premises shall comply with 10.11.8.1 and 10.11.8.2.

10.11.8.1 The audible and visible alarm signal at the control unit only shall automatically reactivate every 24 hours or less until alarm signal conditions are restored to normal.

10.11.8.2 The audible and visible alarm signal shall operate until it is manually silenced or acknowledged.

The requirement in 10.11.8.1 serves as an important reminder, every 24 hours at the protected premises control unit, that an alarm condition still exists and needs to be restored to normal. The ongoing detection of this alarm condition could, depending on its cause, be a symptom of an impairment to the system (see 10.21) that needs to be corrected (see 14.2.2.2.2). Reactivation of the audible and visual alarm signal is not intended to include reactivation of notification appliances used for occupant notification, operation of interfaced fire and life safety equipment, or retransmission of the alarm signal to the supervising station if applicable. In accordance with 10.11.8.2, the reactivated signals can only be manually silenced or acknowledged.

10.12* Fire Alarm Notification Appliance Deactivation.

The requirements of Section 10.12 address the means to manually deactivate fire alarm system alarm notification appliances. Deactivation of the notification appliances can assist emergency forces

personnel with communications when responding to alarm conditions and making assessments in the management of the emergency scene. In using the deactivation feature, the responding personnel must assess the conditions at the scene and work in concert with the evacuation plan for the building. Prior to deactivation of notification appliances, access to the facility needs to be secured so that unauthorized persons do not inadvertently enter the building.

In some situations, mass notification systems are permitted to override fire alarm signals and prevent alarm notification appliances from producing fire alarm signals or messages until released manually by the mass notification system. Requirements addressing mass notification system priority are in 24.4.7 for in-building fire emergency voice/alarm communications systems and in 24.5.1.7 through 24.5.1.10, 24.5.13, and 24.5.22.1 for in-building mass notification systems.

A.10.12 It is the intent that both visual and audible appliances are shut off when the notification appliance silence feature is activated on the fire alarm control unit.

Per the ADA, it is important not to provide conflicting signals for the hearing or visually impaired.

10.12.1 A means for turning off activated alarm notification appliance(s) shall be permitted.

The term *means* recognizes that this function can be performed with alphanumeric keypads, switches, or touch screens.

10.12.2* When an occupant notification alarm signal deactivation means is actuated, both audible and visual notification appliances shall be simultaneously deactivated.

A.10.12.2 Where it is desired to deactivate the notification appliances for fire service operations inside the building and signal evacuated occupants that an alarm is still present, it is recommended that a separate non-silenceable notification zone be provided on the exterior of the building. The audible and visual notification appliances located at the building entrances could serve as a warning to prevent occupant re-entry.

Both audible and visual notification appliances must be deactivated simultaneously to avoid conflicting signals being delivered to occupants, in particular, those with hearing or vision impairments.

10.12.3 The fire alarm notification deactivation means shall be key-operated or located within a locked cabinet, or arranged to provide equivalent protection against unauthorized use.

10.12.4 The means shall comply with the requirements of 10.18.1.

10.12.5 Subsequent Activation of Initiating Devices.

10.12.5.1 Subsequent activation of nonaddressable initiating devices on other initiating device circuits shall cause the notification appliances to reactivate.

10.12.5.2 Subsequent activation of addressable alarm initiating devices of a different type in the same room or addressable alarm initiating devices in a different room on signaling line circuits shall cause the notification appliances to reactivate.

Paragraph 10.12.5.1 requires the reactivation of the alarm notification appliances when a subsequent alarm signal from another IDC occurs. Additionally, 10.12.5.2 requires a reactivation to occur when a subsequent alarm signal from a different type of addressable initiating device occurs from the same room as the original activation, or when any addressable initiating device activation occurs in any other room.

Use of the deactivation feature during testing of the fire alarm system is not addressed. However, the requirements of Section 10.21 for system impairment must be considered whenever the system is taken out of service.

10.12.6 A fire alarm notification deactivation means that remains in the deactivated position when there is no alarm condition shall operate an audible trouble notification appliance until the means is restored to normal.

An audible trouble indication must operate if the means to deactivate is left in the "off" position when no alarm signal is present.

NFPA 720

10.13 Carbon Monoxide (CO) Notification Appliance Deactivation.

N A CO initiating device with an integral sounder shall be permitted to be silenced locally if the CO alarm or supervisory status continues to be displayed at the control unit.

10.14 Supervisory Signals.

10.14.1 Self-Restoring Supervisory Signal Indication. Visible and audible indication of self-restoring supervisory signals and visible indication of their restoration to normal shall be automatically indicated within 90 seconds at the following locations:

(1) Fire alarm control unit for local fire alarm systems
(2) Building fire command center for in-building fire emergency voice/alarm communications systems
(3) Supervising station location for systems installed in compliance with Chapter 26

10.14.2 Latching Supervisory Signal Indication.

Subsections 10.14.1 and 10.14.2 provide reporting requirements for self-restoring and latching supervisory signals. The 90-second requirement is considered adequate because supervisory signals do not represent immediate life-threatening conditions. Separate requirements for self-|restoring and latching supervisory signals were developed to recognize the use of both types. Refer to 23.8.5.8.2 and the associated commentary for additional information on latching supervisory signals.

10.14.2.1 Visible and audible indication of latching supervisory signals shall be indicated within 90 seconds at the locations specified in 10.14.1.

10.14.2.2 Restoration of latching supervisory signals shall be indicated within 90 seconds at the locations specified in 10.14.1.

10.14.3 Coded Supervisory Signal.

10.14.3.1 A coded supervisory signal shall be permitted to consist of two rounds of the number transmitted to indicate a supervisory off-normal condition.

10.14.3.2 A coded supervisory signal shall be permitted to consist of one round of the number transmitted to indicate the restoration of the supervisory condition to normal.

10.14.4 Combined Coded Alarm and Supervisory Signal Circuits. Where both coded sprinkler supervisory signals and coded fire or waterflow alarm signals are transmitted over the same signaling line circuit, provision shall be made to obtain either alarm signal precedence or sufficient repetition of the alarm signal to prevent the loss of an alarm signal.

Δ **10.14.5 Supervisory Notification Appliance Location.** The audible supervisory notification appliances shall be located in an area where they are to be heard.

Activated or reactivated audible supervisory signals indicating an abnormal condition are effective only if someone can hear them. In most instances, the signal will emanate from the control unit equipment or an annunciator located at the building's entrance, or other fire department–approved location, which should permit the signal to be heard.

10.14.6 Supervisory Signal Reactivation. A supervisory signal that has been deactivated at the protected premises shall comply with 10.14.6.1 and 10.14.6.2.

10.14.6.1 The audible and visible supervisory signal at the control unit only shall automatically reactivate every 24 hours or less until supervisory signal conditions are restored to normal.

10.14.6.2 The audible and visible supervisory signal shall operate until it is manually silenced or acknowledged.

The requirement in 10.14.6.1 serves as an important reminder, every 24 hours at the protected premises control unit, that a supervisory condition still exists and needs to be restored to normal. The ongoing detection of a supervisory condition means that a monitored system or process has an abnormal condition or impairment that needs to be corrected. In accordance with 10.14.6.2, the reactivated signals can be only manually silenced or acknowledged.

10.14.7 Supervisory Notification Appliance Deactivation.

10.14.7.1 A means for deactivating supervisory notification appliances shall be permitted.

10.14.7.2 The means shall be key-operated or located within a locked cabinet, or arranged to provide equivalent protection against unauthorized use.

10.14.7.3 The means for deactivating supervisory notification appliances shall comply with the requirements of 10.18.2.

10.14.7.4 Subsequent activation of supervisory initiating devices in other building zones shall cause supervisory notification appliances to activate as required by the system input/output matrix.

10.14.7.5 A means for deactivating supervisory notification appliances that remains in the deactivated position when there is no supervisory condition shall operate an audible trouble notification appliance until the means is restored to normal.

The requirements for deactivating supervisory notification appliances are similar to the requirements for alarm notification appliance deactivation. Paragraph 10.14.7.4 requires that subsequent activation of supervisory initiating devices causes the reactivation of the supervisory notification appliances when programmed to do so in accordance with the system input/output matrix. Exhibit 10.5 illustrates the display and controls for alarm, supervisory, and trouble signals on a fire alarm control unit.

EXHIBIT 10.5

Fire Alarm Control Unit Showing Display Area and Controls for Alarm, Supervisory, and Trouble Signals. (Source: Johnson Controls, Westminster, MA)

10.15 Trouble Signals.

10.15.1 Trouble signals and their restoration to normal shall be indicated within 200 seconds at the locations identified in 10.15.7 and 10.15.8.

10.15.2 Indication of primary power failure trouble signals transmitted to a supervising station shall be in accordance with 10.6.9.3.

While 10.15.1 requires the transmission of trouble signals and their restoration to normal to a supervising station, 10.15.2 correlates with 10.6.9.3 to reflect that the Code requires delaying the transmission of primary power supply failure trouble signals to supervising stations unless the delay is prohibited by the authority having jurisdiction. The requirement in 10.6.9.3 applies to all methods used to transmit signals to the supervising station.

10.15.3 An audible trouble signal shall be permitted to be intermittent provided it sounds at least once every 10 seconds, with a minimum duration of ½ second.

10.15.4 A single audible trouble signal shall be permitted to annunciate multiple fault conditions.

Δ **10.15.5** The audible trouble notification appliances shall be located in an area where they are to be heard.

FAQ Where must audible trouble signal notification appliances be located?

Subsection 10.15.5 requires that the audible trouble signal be located in an area within the protected premises that ensures that it will be heard. A sounding appliance installed separate from the control unit may be required (also see the commentary following 10.14.5).

10.15.6 Activated notification appliances at the protected premises shall continue to operate unless they are manually silenced as permitted by 10.15.10.1.

10.15.7 Visible and audible trouble signals and visible indication of their restoration to normal shall be indicated at the following locations:

(1) Fire alarm control unit for protected premises alarm systems

(2) Building fire command center for in-building fire emergency voice/alarm communications systems
(3) Central station or remote station location for systems installed in compliance with Chapter 26

10.15.8 Trouble signals and their restoration to normal shall be visibly and audibly indicated at the proprietary supervising station for systems installed in compliance with Chapter 26.

10.15.9* A trouble signal that has been deactivated at the protected premises shall comply with 10.15.9.1 and 10.15.9.2.

A.10.15.9 The purpose of automatic trouble re-sound is to remind owners, or those responsible for the system, that the system remains in a fault condition. A secondary benefit is to possibly alert occupants of the building that the fire alarm system is in a fault condition.

10.15.9.1 The audible and visible trouble signal shall automatically reactivate at the control unit every 24 hours or less until trouble signal conditions are restored to normal.

The requirement in 10.15.9.1 serves as an important reminder, every 24 hours at the protected premises control unit, that a trouble condition still exists and needs to be restored to normal. The ongoing detection of a trouble condition means that the system has a fault condition or impairment that needs to be corrected (see 10.21 and 14.2.2.2.2). In accordance with 10.15.6, actuated trouble signals must be manually silenced.

10.15.9.2 The audible and visible trouble signal associated with signaling the depletion or failure of the primary battery of a wireless system as required by 23.16.2(3) and (4) shall automatically resound every 4 hours or less until the depletion signal is restored to normal.

10.15.10 Trouble Notification Appliance Deactivation.

The requirements for deactivating trouble notification appliances are similar to the requirements for deactivating supervisory notification appliances. See 10.14.7.

10.15.10.1 A means for deactivating trouble notification appliances shall be permitted.

10.15.10.2 The means shall be key-operated or located within a locked cabinet, or arranged to provide equivalent protection against unauthorized use.

10.15.10.3 The means for deactivating trouble notification appliances shall comply with the requirements of 10.18.2.

10.15.10.4 If an audible trouble notification appliance is also used to indicate a supervisory condition, as permitted by 10.10.4, a trouble notification appliance deactivation means shall not prevent subsequent actuation of supervisory notification appliances.

10.15.10.5 Subsequent trouble signals shall cause trouble notification appliances to activate as required by the system input/output matrix.

10.15.10.6 A means for deactivating trouble notification appliances that remains in the deactivated position when there is no trouble condition shall operate an audible trouble notification appliance until the means is restored to normal.

10.15.10.7* Unless otherwise permitted by the authority having jurisdiction, trouble notification appliances at the protected premises of a supervising station fire alarm system arranged in accordance with Chapter 26, that have been silenced at the protected premises shall automatically reactivate every 24 hours or less until fault conditions are restored to normal.

A.10.15.10.7 In large, campus-style arrangements with proprietary supervising stations monitoring protected premises systems, and in other situations where off-premises monitoring achieves the desired result, the authority having jurisdiction is permitted to allow the reactivation to occur only at the supervising station. Approval by the authority having jurisdiction is required so it can consider all fire safety issues and make a determination that there are procedures in place to ensure that the intent is met; in other words, someone is available to take action to correct the problem.

10.16 Emergency Control Function Status Indicators.

10.16.1 All controls provided specifically for the purpose of manually overriding any automatic emergency control function shall provide visible indication of the status of the associated control circuits.

The visual status indication can be achieved by a labeled annunciator (or equivalent means) or by the labeled position of a toggle or rotary switch.

10.16.2* Where status indicators are provided for emergency equipment or control functions, they shall be arranged to reflect the actual status of the associated equipment or function.

A.10.16.2 The operability of controlled mechanical equipment (e.g., smoke and fire dampers, elevator recall arrangements, and door holders) should be verified by periodic testing. Failure to test and properly maintain controlled mechanical equipment can result in operational failure during an emergency, with potential consequences up to and including loss of life.

10.17 Notification Appliance Circuits and Control Circuits.

10.17.1 An open, ground-fault, or short-circuit fault on the installation conductors of one alarm notification appliance circuit shall not affect the operation of any other alarm notification appliance circuit for more than 200 seconds regardless of whether the short-circuit fault is present during the normal or activated circuit state.

This subsection addresses the condition where a circuit is supplying its own notification appliances or other equipment, such as an NAC power extender or remote power supply that is supporting additional NACs. In such a circuit, an open, ground-fault, or short-circuit fault on the installation conductors cannot affect the circuits served by the NAC power extender or remote power supply for more than 200 seconds. If a circuit supplies only an NAC power extender or remote power supply, the circuit is considered to be a control circuit and is not required to comply with 10.17.1, as long as conditions in 12.6.1 are satisfied. Note that circuits from an NAC power extender or remote power supply to notification appliances are still NACs and must comply with 12.6.1.

10.17.2* Notification appliance circuits that do not have notification appliances connected directly to the circuit shall be considered control circuits.

A.10.17.2 Initially this requirement was meant to apply to notification appliance circuits (NACs) emanating from a single fire alarm control unit and did not contemplate the use of NAC extender panels. Acknowledging the control circuit concept allows NAC extender panels and relays to be connected to a control circuit.

Δ **10.17.3** Control circuits used for the purpose of controlling NAC extender panels shall comply with all of the following:

(1) The NAC extender panel(s) connected to the control circuit shall not serve more than one notification zone.
(2) The control circuit shall be monitored for integrity in accordance with Section 12.6.
(3) A fault in the control circuit installation conductors shall result in a trouble signal in accordance with Section 10.15.

Subsection 10.17.3 was revised for the 2019 edition. In earlier editions of the Code, a single control circuit could control an unlimited quantity of NAC extender panels and notification zones, all of which could be affected by a single-fault condition. The revised text provides a similar level of requirements for NAC extender panel control circuits as currently exist for addressable notification appliance SLCs and individual NACs; a fault on a control circuit will not affect multiple notification zones.

10.18 Annunciation and Annunciation Zoning.

10.18.1 Alarm Annunciation.

10.18.1.1 Where required by other governing laws, codes, or standards, the location of an operated initiating device shall be annunciated by visible means.

10.18.1.1.1 Visible annunciation of the location of an operated initiating device shall be by an indicator lamp, alphanumeric display, printout, or other approved means.

10.18.1.1.2 The visible annunciation of the location of operated initiating devices shall not be canceled by the means used to deactivate alarm notification appliances.

FAQ What is the purpose of alarm annunciation?

Annunciation, not to be confused with building occupant notification, provides a display for arriving emergency personnel to use so they can assess alarm and other conditions on arrival. The need for annunciation is established outside the requirements of this Code through the framework of higher level mandates discussed in the FAQ following 1.1.1. Annunciation can be accomplished with a separately located annunciator (remote display panel) or through the display associated with the master fire alarm control unit. Exhibits 10.6 through 10.8 illustrate typical annunciators used to provide the zone information required by 10.18.5.

Paragraph 10.18.1.1.2 clarifies that the means used to deactivate alarm notification appliances, addressed in Section 10.12, must not cancel the visible annunciation of the alarm locations.

10.18.2 Supervisory and Trouble Annunciation.

10.18.2.1 Where required by other governing laws, codes, or standards, supervisory and/or trouble conditions shall be annunciated by visible means.

10.18.2.1.1 Visible annunciation shall be by an indicator lamp, an alphanumeric display, a printout, or other means.

10.18.2.1.2 The visible annunciation of supervisory and/or trouble conditions shall not be canceled by the means used to deactivate supervisory or trouble notification appliances.

EXHIBIT 10.6

Fire Alarm Control Unit with Liquid Crystal Display Screen. (Source: Mircom Technologies Ltd., Niagara Falls, NY)

EXHIBIT 10.7

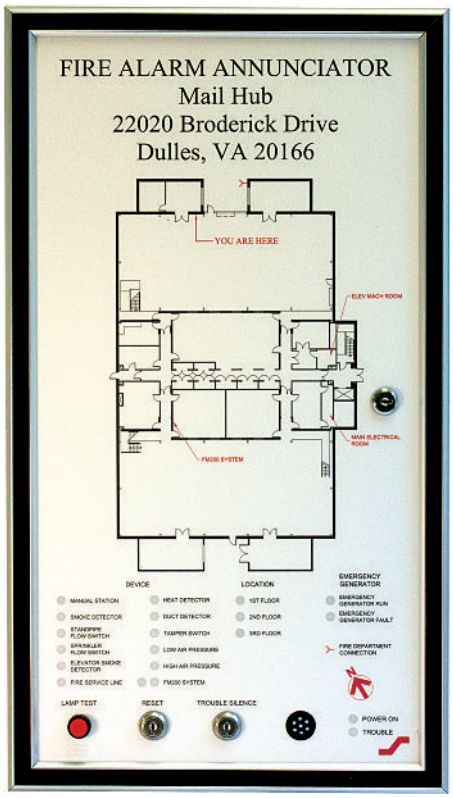

Graphic Fire Alarm Annunciator. (Source: Space Age Electronics, Inc., Sterling, MA)

EXHIBIT 10.8

Back-Lit Labeled Annunciator. (Source: Space Age Electronics, Inc., Sterling, MA)

The requirements for annunciation of supervisory and trouble conditions parallel those in 10.18.1 for alarm annunciation.

10.18.3* Annunciator Access and Location.

A.10.18.3 The primary purpose of annunciation is to enable responding personnel to quickly and accurately determine the status of equipment or emergency control functions that might affect the safety of occupants.

The authority having jurisdiction determines the type and location of any required annunciation. Common locations for annunciation include lobbies, guard's desks, and fire command centers. This Code does not prescribe requirements for the location of the fire alarm control unit. However, if annunciation is required and the fire alarm control unit is used as the means for annunciation, it must be located in accordance with 10.18.3.1 and 10.18.3.2. Further, if NFPA *101®*, *Life Safety Code®*, is used, NFPA *101* requires controls to be located in accordance with the following excerpt:

NFPA *101* (2018)

9.6.6 Location of Controls. Operator controls, alarm indicators, and manual communications capability shall be installed at a convenient location acceptable to the authority having jurisdiction.

For applications involving an ECS, the requirements of Chapter 24 should be reviewed when locations for control equipment are being considered. For example, Section 24.11, Information, Command, and Control, includes requirements for the emergency command center of ECSs and for emergency communications control units (ECCUs). Subsection 24.5.14 includes specific requirements for mounting of a local operating console (LOC). Other sections and subsections in Chapter 24 that may impact decisions on the location of controls include 24.4.5 for in-building fire emergency voice/alarm communications systems; 24.5.2, 24.5.11, and 24.5.12 for in-building mass notification systems; 24.8.1 for two-way in-building communications systems; and Section 24.10 for area of refuge ECSs, stairway communications systems, elevator landing communications systems, and occupant evacuation elevator lobby communications systems.

10.18.3.1 All required annunciation means shall be readily accessible to responding personnel.

10.18.3.2 All required annunciation means shall be located as required by the authority having jurisdiction to facilitate an efficient response to the situation.

10.18.4 Alarm Annunciation Display. Visible annunciators shall be capable of displaying all zones in alarm.

10.18.4.1 If all zones in alarm are not displayed simultaneously, the zone of origin shall be displayed.

10.18.4.2 If all zones in alarm are not displayed simultaneously, there shall be an indication that other zones are in alarm.

The requirements in 10.18.4.1 and 10.18.4.2 ensure that where systems require scrolling to view all the zones in alarm, the system will display the zone of origin and provide an indication that more alarms can be viewed than are currently displayed. The intent is to help emergency responders obtain complete information from the system quickly. The zone of origin must always be displayed.

Although the arrangement of the display is not prescribed, Code users should be aware of the standard emergency service interface requirements of Section 18.11 and the guidance in related A.18.11.

10.18.5* Annunciation Zoning.

A.10.18.5 Fire alarm system annunciation should, as a minimum, be sufficiently specific to identify a fire alarm signal in accordance with the following:

(1) If a floor exceeds 22,500 ft^2 (2090 m^2) in area, the floor should be subdivided into detection zones of 22,500 ft^2 (2090 m^2) or less, consistent with the existing smoke and fire barriers on the floor.

(2) If a floor exceeds 22,500 ft^2 (2090 m^2) in area and is undivided by smoke or fire barriers, detection zoning should be determined on a case-by-case basis in consultation with the authority having jurisdiction.

(3) Waterflow switches on sprinkler systems that serve multiple floors, areas exceeding 22,500 ft^2 (2090 m^2), or areas inconsistent with the established detection system zoning should be annunciated individually.
(4) In-duct smoke detectors on air-handling systems that serve multiple floors, areas exceeding 22,500 ft^2 (2090 m^2), or areas inconsistent with the established detection system zoning should be annunciated individually.
(5) If a floor area exceeds 22,500 ft^2 (2090 m^2), additional zoning should be provided. The length of any zone should not exceed 300 ft (91 m) in any direction. If the building is provided with automatic sprinklers throughout, the area of the alarm zone should be permitted to coincide with the allowable area of the sprinkler zone.

Subsection 10.18.5 specifies the minimum zoning required. Fire alarm system notification zones, which are addressed by these requirements, should correlate with building smoke and fire zones. This correlation is especially important if an in-building fire emergency voice/alarm communications system is used to selectively or partially evacuate occupants or to relocate occupants to areas of refuge during a fire. Definitions for the terms *zone*, *notification zone,* and *signaling zone* are in 3.3.328. In addition, refer to the requirements in 23.8.6.3 for notification zones and the requirements in 24.4.9 for signaling zones.

Additional zoning requirements might exist in the governing building codes; NFPA *101*; *NFPA 5000®*, *Building Construction and Safety Code®*; and local ordinances. These higher-level documents often require each floor of a building to be zoned separately for smoke detectors, waterflow switches, manual fire alarm boxes, and other initiating devices. The zoning recommendations in A.10.18.5 parallel the annunciation zoning requirements in NFPA *101* and the model building codes. *NFPA 72*, as a minimum installation standard, does not require that an addressable system control unit be used. Conventional (zone or nonaddressable) alarm control units are often adequate enough to meet the annunciation zoning requirements. Local codes or ordinances could be more specific.

10.18.5.1 For the purpose of alarm annunciation, each floor of the building shall be considered as a separate zone.

10.18.5.2 For the purposes of alarm annunciation, if a floor of the building is subdivided into multiple zones by fire or smoke barriers and the fire plan for the protected premises allows relocation of occupants from the zone of origin to another zone on the same floor, each zone on the floor shall be annunciated separately.

10.18.5.3 Where the system serves more than one building, each building shall be annunciated separately.

10.19 Monitoring Integrity of In-Building Fire Emergency Voice/Alarm Communications Systems.

10.19.1* Audio Amplifier and Tone-Generating Equipment. If loudspeakers are used to produce audible fire alarm signals, the required trouble signal for 10.19.1.1 through 10.19.1.3 shall be in accordance with Section 10.15.

A.10.19.1 Amplifiers generally require significant power regardless of load. To reduce the secondary power demand, there is no requirement to monitor the integrity of amplifiers during non-alarm operation on secondary power. This allows the amplifiers to be shut down while the system is operating on secondary power until an alarm occurs. When an alarm occurs, monitoring of integrity must resume so that an operator is aware of current conditions and so that any backup amplifiers can be engaged.

Backup amplifying and evacuation signal–generating equipment is recommended with automatic transfer upon primary equipment failure to ensure prompt restoration of service in the event of equipment failure.

10.19.1.1 When primary power is available, failure of any audio amplifier shall result in a trouble signal.

10.19.1.2 When an alarm is present and primary power is not available (i.e., system is operating from the secondary power source), failure of any audio amplifier shall result in a trouble signal.

10.19.1.3 Failure of any tone-generating equipment shall result in a trouble signal, unless the tone-generating and amplifying equipment are enclosed as integral parts and serve only a single, listed loudspeaker.

10.19.2 Two-Way Telephone Communications Circuits.

10.19.2.1 Two-way telephone communications circuit installation conductors shall be monitored for open circuit fault conditions that would cause the telephone communications circuit to become fully or partially inoperative.

10.19.2.2 Two-way telephone communications circuit installation conductors shall be monitored for short circuit fault conditions that would cause the telephone communications circuit to become fully or partially inoperative.

10.19.2.3 Two-way telephone communications circuit fault conditions shall result in a trouble signal in accordance with Section 10.15.

Subsection 10.19.2 requires that the installation conductors of a two-way telephone circuit be monitored for both open and short-circuit fault conditions. These fault conditions will result in a trouble signal in accordance with Section 10.15.

10.20 Documentation and Notification.

10.20.1 Documentation shall be in accordance with Chapter 7.

10.20.2 The authority having jurisdiction shall be notified prior to installation or alteration of equipment or wiring.

Many authorities having jurisdiction require a permit for the installation or modification of a system before work begins. A wise practice is to contact the local authority having jurisdiction to determine if a permit is needed and what the submittal requirements entail. Additionally, more than one authority having jurisdiction might have an interest in the work to be performed. While nongovernmental authorities having jurisdiction generally do not issue a permit for proposed work, they could be in a position to approve or deny the installation on behalf of the owner or insurance carrier.

10.21* Impairments.

A.10.21 The term *impairments* encompasses a broad range of circumstances wherein a system or portion thereof is taken out of service for a variety of reasons. Systems are routinely impaired to allow hot work (e.g., open flame operations) to be performed in areas with automatic detection, construction, painting, and so forth, as well as to conduct normal system maintenance and testing. Impairments can be limited to specific initiating devices

and/or functions (e.g., disconnecting the supervising station connection during system testing), or they can involve taking entire systems or portions of systems out of service. Section 10.21 is intended to help building owners control impairments of the system(s) in their building(s) and to ensure that systems are restored to full operation and/or returned to service afterward.

Additional requirements for impairments and out-of-service conditions are in 14.2.2.2.

Requirements addressing impairments to fire alarm systems provide a program to manage these occurrences. Impairments can be caused by system defects or by out-of-service events. System defects and malfunctions continue to be addressed in the testing and maintenance chapter. Refer to 14.2.2.2 and related commentary.

10.21.1 The system owner or the owner's designated representative shall be notified when a system or part thereof is impaired. Impairments to systems shall include out-of-service events.

10.21.2 A record of the impairments shall be maintained by the system owner or the owner's designated representative for a period of 1 year from the date the impairment is corrected.

10.21.3 The supervising station shall report to the authority having jurisdiction any system for which required monitoring has been terminated.

10.21.4* The service provider shall report to the authority having jurisdiction any system that is out of service for more than 8 hours.

A.10.21.4 It is important for the authority having jurisdiction, typically the local fire official, to be informed when systems have been out of service for more than 8 hours so that appropriate measures can be taken. The term *out of service* is meant to refer to the entire system or a substantial portion thereof.

Subsections 10.21.3 and 10.21.4 provide the authorities having jurisdiction with additional information relative to signaling system status and the status of system monitoring in their jurisdiction. Subsection 10.21.3 requires the supervising station to notify the authority having jurisdiction when monitoring of an alarm system, often a requirement of local building and fire codes and NFPA *101*, is terminated. With this information, the authority having jurisdiction can follow up on the cause of monitoring termination and attempt to re-establish the monitoring service.

Subsection 10.21.4 requires that the service provider report to the authority having jurisdiction any system that is totally, or substantially, out of service for more than 8 hours. A service technician should be dispatched, based on the monitoring or maintenance/servicing contracts in place, by the supervising station, the owner, or the owner's representative to make necessary repairs to a system that is not in full service.

While the Code does not specifically indicate how the reporting is to occur, ultimately it should be in the manner approved by the authority having jurisdiction. The use of faxes, email, or other electronic media that provides prompt notification is best.

10.21.5* Where required by the authority having jurisdiction, mitigating measures shall be implemented for the period that the system is impaired.

A.10.21.5 The need for mitigating measures is typically determined on a case-by-case basis. This considers the building, occupancy type, nature and duration of impairment, building occupancy level during impairment period, active work being conducted on the fire alarm system during the impairment, condition of other fire protection systems and features (i.e., sprinklers, structural compartmentation, etc.), and hazards and assets at risk.

Appropriate mitigating measures range from simple occupant notification to full-time fire watch. Determining factors vary from testing-related impairments and maintenance activities during normal business through extensive impairments to high-value, high-hazard situations.

10.21.6 The system owner or the owner's designated representative and the authority having jurisdiction shall be notified when an impairment period ends.

10.22* Unwanted Alarms.

For the purpose of reporting, alarm signals that are not the result of hazardous conditions shall be classified as Unwanted and subclassified as one of the following:

(1) Malicious alarm
(2) Nuisance alarm
(3) Unintentional alarm
(4) Unknown alarm

A.10.22 See 3.3.314 for the definitions of unwanted alarms.

The definitions for various types of unwanted alarms in 3.3.314 provide guidance regarding the classification of alarm signals received that are not the result of a potentially hazardous situation.

References Cited in Commentary

ANSI/ASA S3.41, *American National Standard Audible Emergency Evacuation (E2) and Evacuation Signals with Relocation Instructions (ESRI)*, 1990, reaffirmed 2015, American National Standards Institute, Inc., New York, NY.

NECA 1-2015, *Standard for Good Workmanship in Electrical Construction*, 3 Bethesda Metro Center, Suite 1100, Bethesda, MD 20814.

NFPA 70®, *National Electrical Code®*, 2017 edition, National Fire Protection Association, Quincy, MA.

NFPA *101®*, *Life Safety Code®*, 2018 edition, National Fire Protection Association, Quincy, MA.

NFPA 110, *Standard for Emergency and Standby Power Systems*, 2019 edition, National Fire Protection Association, Quincy, MA.

NFPA 111, *Standard on Stored Electrical Energy Emergency and Standby Power Systems*, 2019 edition, National Fire Protection Association, Quincy, MA.

NFPA 720, *Standard for the Installation of Carbon Monoxide (CO) Detection and Warning Equipment* (withdrawn), National Fire Protection Association, Quincy, MA.

NFPA 731, *Standard for the Installation of Electronic Premises Security Systems,* 2017 edition, National Fire Protection Association, Quincy, MA.

NFPA 1221, *Standard for the Installation, Maintenance, and Use of Emergency Services Communications Systems*, 2019 edition, National Fire Protection Association, Quincy, MA.

NFPA 5000®, *Building Construction and Safety Code®*, 2018 edition, National Fire Protection Association, Quincy, MA.

Reserved Chapter

In the 2019 edition of *NFPA 72®*, *National Fire Alarm and Signaling Code®*, Chapter 11 is reserved for future use.

Circuits and Pathways

CHAPTER

12

Chapter 12 addresses the performance and survivability characteristics of pathways (interconnections) used in fire alarm and signaling systems. The terms *circuit* and *path (pathway)* are used interchangeably in this Code (see 3.3.48 and 3.3.197 for definitions). Pathway performance is identified by a class designation: Class A, Class B, Class C, Class D, Class E, Class N, or Class X. Class N addresses modern network infrastructure designs such as Ethernet.

Pathway survivability is defined as "the ability of any conductor, optic fiber, radio carrier, or other means for transmitting system information to remain operational during fire conditions" (see 3.3.198). The information in Chapter 12 describes survivability in terms of *levels*. The levels are determined according to the protection afforded to the pathways by the configuration and/or type of cable installed, such as fire-rated or fire-resistive cables or cable systems; the building construction in which the cable is installed; or whether automatic suppression systems exist where the cables are installed. Designation levels are assigned as Level 0, Level 1, Level 2, or Level 3. Section 12.5 addresses shared pathway designations, which are based on priorities of the types of pathways, required levels of segregation, and whether they carry life safety data or non–life safety data.

The following list is a summary of significant changes to Chapter 12 for the 2019 edition:

- Added the redundant portions of Class N circuits to pathway separation requirements in 12.3.8.
- Added a paragraph to A.12.4.3 to explain the impact of non-fire rated devices in a circuit with a survivability rating.

12.1 Application.

12.1.1 Pathways (interconnections) shall be designated based on the performance characteristics defined in this chapter.

System Design Tip

Pathways must be designated by performance class and survivability level, but Chapter 12 does not require any specific class or level for a particular application. Unless another chapter designates specific performance requirements, the enabling code, standard, or authority having jurisdiction designates the required performance class and survivability level. Otherwise, the system designer is responsible for conducting an evaluation (see 23.4.3.1) to determine the class and level to be provided. See 23.4.3.2 for the items to be considered as part of this evaluation for fire alarm systems.

12.1.2 The requirements of Chapter 14 shall apply.

Chapter 14 details requirements for inspection, testing, and maintenance of all parts of a system, including circuits and pathways.

12.2 General.

12.2.1* Performance and survivability characteristics of signaling pathways (interconnections) shall comply with the defined designations of this chapter.

The designation of pathway class depends on the performance of the pathway under different conditions. These conditions, described in 12.3.1 through 12.3.7, include requirements for operation under fault conditions, as well as whether the pathway contains a redundant path. In addition to the pathway performance designations detailed in Chapter 12, other chapters may specify additional requirements for pathways in specific types of systems. See 12.3.8 for specific requirements on the separation of Class A, Class N, and Class X conductors in a fire alarm system.

In addition to having a class designation, the pathway may also be assigned a survivability level. While the means of providing survivability for a pathway can offer some level of mechanical protection that may be useful for situations other than a fire, levels of survivability are for protection against fire damage to the pathway. See the commentary following Section 12.4.

A.12.2.1 In the 2007 edition of *NFPA 72*, initiating device circuit, signaling line circuit, and notification appliance circuit performance class/style tables were rooted in "copper" wiring methods. Fire alarm control units use new communications technologies, such as Ethernet, fiber optics, and wireless, which do not fit in the "copper" wiring methods.

The 2007 edition used earlier terminology such as a style designation, addressed only Class A and Class B pathways, and was limited to performance of pathways based on copper wiring methods. As new pathway technologies between the fire alarm control unit and the interconnected equipment have emerged, additional class designations have been added.

12.2.2 A pathway (interconnection) class designation shall be dependent on the pathway (interconnection) capability to continue to operate during abnormal conditions.

12.2.3 The installation of all pathway wiring, cable, and equipment shall be in accordance with *NFPA 70* and the applicable requirements of 12.2.3.1 through 12.2.3.3.

The installation of wiring, circuits, and pathways is required to comply with the minimum requirements of *NFPA 70*®, *National Electrical Code*® (*NEC*®). The primary concern of the *NEC* is to ensure that the installation does not pose an electrocution or fire hazard. In addition to the safety requirements of the *NEC*, the installation must also comply with the installation requirements provided by the fire alarm equipment manufacturer.

An important requirement in the *NEC* addresses fire alarm and signaling system pathways that extend beyond a building. The specific section from Article 760 of the *NEC* is included here for reference as follows:

***NFPA 70* (2017)**

760.32 Fire Alarm Circuits Extending Beyond One Building.

Non–power-limited fire alarm circuits and power-limited fire alarm circuits that extend beyond one building and run outdoors shall meet the installation requirements of Parts II, III, and IV of Article 800 and shall meet the installation requirements of Part I of Article 300.

Part III of *NEC* Article 800 addresses requirements for the use of listed primary protective devices under certain conditions of exposure to electric light or power conductors or lightning. Listed primary protective devices protect equipment, wiring, and personnel against the effects of excessive potentials and currents caused by lightning. Refer to UL 497B, *Standard for Protectors for Data Communication and Fire-Alarm Circuits*.

Designers and installers should consult with the manufacturers of the fire alarm (or signaling system) and the transient voltage surge suppressors for proper selection and installation of primary protective devices. The selection of protection for circuits should consider how the fire alarm or signaling system, as a whole, is to be used. The accompanying Closer Look feature examines the elements of series protective devices and parallel protective devices.

System Design Tip

Closer Look

Series Protective Devices and Parallel Protective Devices

A series protective device might dissipate small transients to ground and allow the protected circuit to continue to operate. But when subjected to a large transient, a series protective device will fail open. The circuit will no longer operate, but the equipment will have been protected and will not be subjected to secondary transients. Most fire alarm circuits that open will result in a trouble condition. Some emergency control functions that are wired as Class D in accordance with 12.3.4 will cause the control function to operate (in a fail-safe mode) when the circuit is opened. In the case of a primary power supply circuit, the open circuit will result in a trouble condition and the system will transfer to secondary power.

A parallel protective device dissipates the energy of transients to ground but leaves the protected circuit functioning. In the event of a large transient, the protective device might protect the circuit and be destroyed in the process. The circuit functions, but it no longer has protection against subsequent transients.

Most protective devices have a visual means to indicate failure. Others have a set of contacts that can be monitored to signal failure. The choice of a series or a parallel protective device should consider the mission of the system, the use of the particular circuit, the impact of circuit failure, the likelihood and the impact of secondary transients, and the response and repair capabilities of the owner or service company.

Article 760 of the *NEC* outlines the requirements for installation of power-limited (Part III) and non–power-limited (Part II) circuits. Power limiting is accomplished by the equipment manufacturer by significantly limiting the amount of energy available to the circuit, thereby increasing electrical safety. A power-limited circuit is one that is supplied by a current-limiting power source complying with 760.121 of the *NEC*, such as a listed PLFA or Class 3 transformer, a listed PLFA or Class 3 power supply, or listed equipment marked to identify the PLFA power source. A non–power-limited circuit power source is one that complies with 760.41 of the *NEC* (output voltage not more than 600 volts, nominal).

Most fire alarm systems installed today use power-limited circuits. In general, power-limited circuits operate in the 12- or 24-volt direct current (dc) range, although they may employ higher voltages.

Power-limited circuits have identification (labeling) requirements outlined in the *NEC* Section 760.124. These markings must remain in place unless a circuit is changed in the field and the equipment is appropriately reclassified. Both power-limited and non–power-limited fire alarm branch circuit disconnecting means (often a circuit breaker) must have a red marking and indicate "FIRE ALARM CIRCUIT." See 10.6.5.2.

12.2.3.1 Optical fiber cables installed as part of the fire alarm system shall meet the requirements of *NFPA 70* Article 770, and be protected against physical damage in accordance with *NFPA 70* Article 760.

12.2.3.2* Fire alarm system wiring and equipment, including all circuits controlled and powered by the fire alarm system, shall be installed in accordance with the requirements of this Code and of *NFPA 70* Article 760.

All fire alarm system wiring installations must conform to the requirements of the *NEC*. The *NEC* provides general wiring methods and requirements in Chapter 1 through Chapter 4. Article 760, Fire Alarm Systems, in Chapter 7 of the *NEC*, supplements and modifies the requirements of Chapter 1 through Chapter 4 specifically for fire alarm systems. The wiring methods permitted in Article 760 include the use of Chapter 3 wiring methods as well as the use of specific types of non–power-limited and power-limited cables. The wiring method used must be installed in accordance with the manufacturer's instructions, any listing limitations, and the requirements of Article 760.

One of the general requirements of Article 760 of the *NEC* that applies to all fire alarm system wiring is the requirement in 760.30, which reads as follows:

***NFPA 70* (2017)**

760.30 Fire Alarm Circuit Identification.

Fire alarm circuits shall be identified at terminal and junction locations in a manner that helps to prevent unintentional signals on fire alarm system circuit(s) during testing and servicing of other systems.

One way to facilitate circuit identification is to use a terminal cabinet with permanently mounted and labeled terminals, such as the one shown in Exhibit 12.1. Another common method is to paint fire alarm system circuit junction box covers red and/or label them with the words "FIRE ALARM," as shown in Exhibit 12.2. Some jurisdictions require that all conduits carrying fire alarm system circuits be red. Other jurisdictions require a red stripe every 10 ft (3.0 m) or red fittings where specific lengths of conduit are joined for fire alarm system circuit conduits.

EXHIBIT 12.1

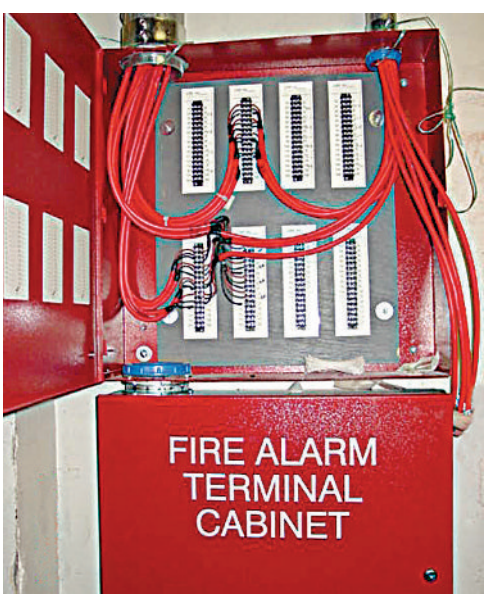

Fire Alarm Terminal Cabinet. (Source: JENSEN HUGHES, Warwick, RI)

EXHIBIT 12.2

Red Box Cover with "FIRE ALARM" Label. (Source: JENSEN HUGHES, Warwick, RI)

Δ **A.12.2.3.2** Fire alarm systems include fire detection and alarm notification, guard's tour, sprinkler waterflow, and sprinkler supervisory systems. Circuits controlled and powered by the fire alarm system include circuits for the control of building systems safety functions, elevator capture, elevator shutdown, door release, smoke doors and damper control, fire doors and damper control, and fan shutdown, but only where these circuits are powered by and controlled by the fire alarm system. [70:760.1 Informational Note No. 1]

Class 1, 2, and 3 circuits are defined in Article 725 (of *NFPA 70*). [**70:**760.1 Informational Note No. 2]

12.2.3.3* Wiring methods permitted by other sections of this Code to resist attack by fire shall be installed in accordance with manufacturer's published instructions and the requirements of *NFPA 70* Article 760 and Article 728.

A.12.2.3.3 It is important for the intended functionality of circuit integrity cable or electrical circuit protective systems to follow manufacturer's installation instructions. An electrical circuit protective system has detailed installation requirements, and additional requirements can be found in the manufacturer's installation instructions, *NFPA 70* or the listing organizations' guide information.

Circuit integrity (CI) cables are required by 760.24(B) of the *NEC* to be supported at a distance not exceeding 24 in. (610 mm). Where located within 7 ft (2.1 m) of the floor, the cable is required to be fastened in an approved manner at intervals of not more than 18 in. (450 mm). Installation requirements for fire-resistive cables are in *NEC* Article 728.

Additionally, where CI cables and conductors are installed in a raceway, or where conductors and cables of electrical circuit protective systems are installed in the vertical orientation, they are required by 760.3(I) of the *NEC* to be installed and supported in accordance with 300.19.

12.2.3.4* Where operational capability is required to be maintained or continued during the application of a fault, the operational capability required in 10.11.1 shall be restored within 200 seconds from the time the fault is introduced.

A.12.2.3.4 In the event of an introduction of a fault and subsequent alarm condition, operational ability should be restored within 200 seconds, and the alarm condition received at the fire alarm control unit is to be within 10 seconds after the expiration of the 200 seconds. Any subsequent alarms initiated after the initial 200-second window should be actuated in accordance with 10.11.1.

Paragraphs 12.2.3.4 and A.12.2.3.4 clarify when the operational capability of the fire alarm and signaling system is to begin after the introduction of a fault condition. The issue is the application of two events — fault and alarm — in rapid succession. The Code permits each event to have a different response time. The response to a fault condition is 200 seconds; the response to an alarm condition is 10 seconds. A fault affects the pathway performance until it is detected, and then the pathway is automatically reconfigured.

Systems process these two events in the order of occurrence. Where a fault condition is present first, the system is permitted up to 200 seconds to detect and automatically reconfigure. Any alarm present after the 200 seconds is required to be annunciated and to actuate the required signals within 10 seconds.

12.2.4 Ground Connections.

12.2.4.1 Unless otherwise permitted by 12.2.4.2, all fire alarm systems shall test free of grounds.

N **12.2.4.2** The requirements of 12.2.4.1 shall not be required where parts of circuits or equipment are intentionally and permanently grounded in order to provide ground fault detection, noise suppression, emergency ground signals, and circuit protection grounding.

12.2.4.3* On conductive pathways, operational capability shall be maintained during the application of a single ground connection.

A.12.2.4.3 Technologies that do not use metallic conductors (e.g., wireless or optical fiber) are not affected by ground connections.

12.3* Pathway Class Designations.

Pathways shall be designated as Class A, Class B, Class C, Class D, Class E, Class N, or Class X, depending on their performance.

System Design Tip

Although the pathway class designations are presented in alphabetical order, the Code does not have a preference of one class over another for a particular application. The enabling codes, standards, authority having jurisdiction, or system designer must determine the pathway class that best meets the site-specific conditions and design objectives for a particular application.

Class X circuits are essentially a Class A circuit that has isolation (short circuit) protection between each device. Short circuits are isolated, allowing the remainder of the circuit to operate, thereby providing greater reliability.

A.12.3 The intent of the circuit designations is not to create a hierarchal ranking; rather it is to provide guidance on the levels of performance.

Users of the Chapter 12 designations should review whether there are other abnormal conditions not specified in Chapter 12 that the pathways need to annunciate and operate through for their application.

12.3.1* Class A. A pathway shall be designated as Class A when it performs as follows:

(1) It includes a redundant path.
(2) Operational capability continues past a single open, and the single open fault results in the annunciation of a trouble signal.
(3) Conditions that affect the intended operation of the path are annunciated as a trouble signal.
(4) Operational capability on metallic conductors is maintained during the application of a single ground fault.
(5) A single ground condition shall resulton metallic conductors results in the annunciation of a trouble signal.

A.12.3.1 Fiber-optic or wireless pathways are examples of Class A circuitry not impaired by earth ground connection or short-circuits and therefore do not annunciate those conditions as a fault.

12.3.2 Class B. A pathway shall be designated as Class B when it performs as follows:

(1) It does not include a redundant path.
(2) Operational capability stops at a single open.
(3) Conditions that affect the intended operation of the path are annunciated as a trouble signal.

(4) Operational capability on metallic conductors is maintained during the application of a single ground fault.
(5) A single ground condition shall resulton metallic conductors results in the annunciation of a trouble signal.

12.3.3* Class C. A pathway shall be designated as Class C when it performs as follows:

(1) It includes one or more pathways where operational capability is verified via end-to-end communication, but the integrity of individual paths is not monitored.
(2) A loss of end-to-end communication is annunciated as a trouble signal.

A.12.3.3 Class C is intended to describe technologies that supervise the communication pathway by polling or continuous communication "handshaking," such as the following:

(1) Fire alarm control unit or supervising station connections to a wired LAN, WAN, or Internet
(2) Fire alarm control unit or supervising station connections to a wireless LAN, WAN, and Internet
(3) Fire alarm control unit digital alarm communicator transmitter or supervising station digital alarm communicator receiver connections to the public switched telephone network

Individual pathway segments are not required to be monitored. Supervision is accomplished by end-to-end communications.

12.3.4* Class D. A pathway shall be designated as Class D when it has fail-safe operation, where no fault is annunciated, but the intended operation is performed in the event of a pathway failure.

A.12.3.4 Class D is intended to describe pathways that are not supervised but have a fail-safe operation that performs the intended function when the connection is lost. Examples of such pathways include the following:

(1) Power to door holders where interruption of the power results in the door closing
(2) Power to locking hardware that release upon an open circuit or fire alarm operation

12.3.5* Class E. A pathway shall be designated as Class E when it is not monitored for integrity.

A.12.3.5 Class E is intended to describe pathways that do not require supervision as described in Section 12.6.

12.3.6 Class N. A pathway shall be designated as Class N when it performs as follows:

(1)* It includes two or more pathways where operational capability of the primary pathway and a redundant pathway to each device shall be verified through end-to-end communication.

Exception: When only one device is served, only one pathway shall be required.

(2) A loss of intended communications between endpoints shall be annunciated as a trouble signal.
(3) A single open, ground, short, or combination of faults on one pathway shall not affect any other pathway.
(4)* Conditions that affect the operation of the primary pathway(s) and redundant pathway(s) shall be annunciated as a trouble signal when the system's minimal operational requirements cannot be met.
(5)* Primary and redundant pathways shall not be permitted to share traffic over the same physical segment.

Class N circuits are similar to Ethernet; they are addressable and are used to transmit data. There are differences between the two, however, and certain Code requirements for Class N circuits do not apply to standard Ethernet circuits.

Monitoring for integrity of Class N circuits is not performed in a traditional sense. There is no monitoring current as in a traditional initiating device circuit (IDC) or notification appliance circuit (NAC). Class N circuits must verify end-to-end communications, similarly to signaling line circuits (SLCs). A loss of communications must be reported as a trouble signal within 200 seconds, and faults on one pathway cannot affect any other pathway.

Class N circuit failures must be reported as a trouble signal at the fire alarm control unit. Ethernet has no such requirement. Class N failures usually involve communications failures, such as an open circuit. Because Class N circuits use galvanic isolation, ground faults cannot be detected and are not required to be reported. Loss of communications to a single device or appliance is considered acceptable, but loss of communications to a large portion of the system is not. That is why *NFPA 72®*, *National Fire Alarm and Signaling Code®*, requires a redundant pathway, except where the pathway serves a single device or appliance.

Subsection 12.6.9 exempts circuits from monitoring requirements between control equipment enclosures, where circuits are installed in conduit [up to 20 ft (6 m) in length], or where equivalently protected. For example, a Class N circuit installed in a conduit between a fire alarm control unit and a router is not required to be supervised if the run is not more than 20 ft (6 m) in length.

Class N circuit operation requires a redundant pathway when the circuit serves more than one device or appliance. Where redundant path segments are required to have survivability similar to Class A or Class X circuits, the physical separation requirements and overall equipment redundancy must meet the additional requirements in Chapter 12 in addition to the Class N redundancy requirement.

The requirements for a redundant pathway make Class N circuits roughly "equal" to more traditional fire alarm circuits. Class N circuits in accordance with 12.3.6 are essentially an Ethernet connection but with a requirement for redundancy and end-to-end data verification.

Class N pathways commonly use metallic communications cable, such as a 100 ohm balanced twisted pair (e.g., Category 5E), including single-pair or multi-pair cable, or other communications media, such as optical fiber cable or wireless transmission, or a combination of two or more such communications means. Where a conductor-based media is used for Class N, the intention is not to monitor faults on individual conductors but rather to monitor the operational capability and performance of the pathway as a whole.

Δ **A.12.3.6(1)** The Class N pathway designation is added to specifically address the use of modern network infrastructure when used in fire alarm and emergency communication systems.

Class N networks can be specified for ancillary functions but are not required for supplemental reporting described in 23.12.4. *[See Figure A.23.12.4.]*

Ethernet network devices are addressable but with an important distinction from device addresses on a traditional SLC multi-drop loop. A device with an Ethernet address is, in most cases, a physical endpoint connected to a dedicated cable. Traditional SLC devices are all wired on the same communication line (in parallel), similar to an old party-line telephone system. By comparison, Ethernet's network switches direct each data packet to its intended recipient device like our modern phone systems.

Class N uses redundant paths as a means to compensate for Ethernet wiring that does not report a single connection to ground, a basic requirement of Class B. Thus, the physical separation of Class A and Class X, and equipment redundancy described in 12.3.7, is not inherently required of Class N. In other words, failure of a single switch is permitted take down a class N segment and is only required to report the loss of communication. Where redundant path segments are intended to have survivability similar to Class A or Class X,

the physical separation requirements and overall equipment redundancy must be specified in addition to the Class N designation.

As a visual model, Class N could be likened to a redundant pathway backbone, allowed to have Class C branch paths to single endpoint devices. Therefore, every effort is made in this section to clearly distinguish the single endpoint device from the transport equipment required to have redundant paths.

Class N requires redundant, monitored pathway segments to and from control equipment (fire alarm control units, ACUs, or ECCUs) where any interruption in communications could potentially affect multiple endpoint devices. Typically, interconnected communications equipment such as Ethernet switches, wireless repeaters, or media converters are used in combination to create pathways. Chapter 12 describes the required behavior of Class N pathways. All equipment must meet the requirements of other chapters in *NFPA 72* (such as, but not limited to, requirements pertaining to secondary power supplies, equipment listings, and environment conditions).

Redundant pathways, isolated from ground, are actually common practice in robust Ethernet designs. Managed network switches commonly have specific uplink ports that are intended for load sharing and allow two parallel connections. For compliance with Class N, a trouble must be reported if either of these connections fails. *[See Figure A.12.3.6(1)(a) and Figure A.12.3.6(1)(b).]*

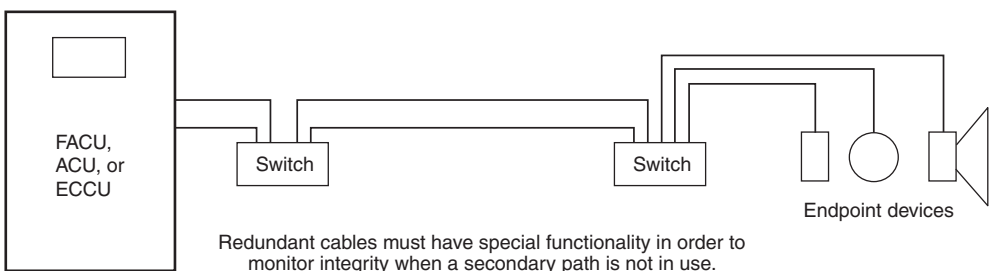

FIGURE A.12.3.6(1)(a) *Class N Pathway Block Diagram – Example 1.*

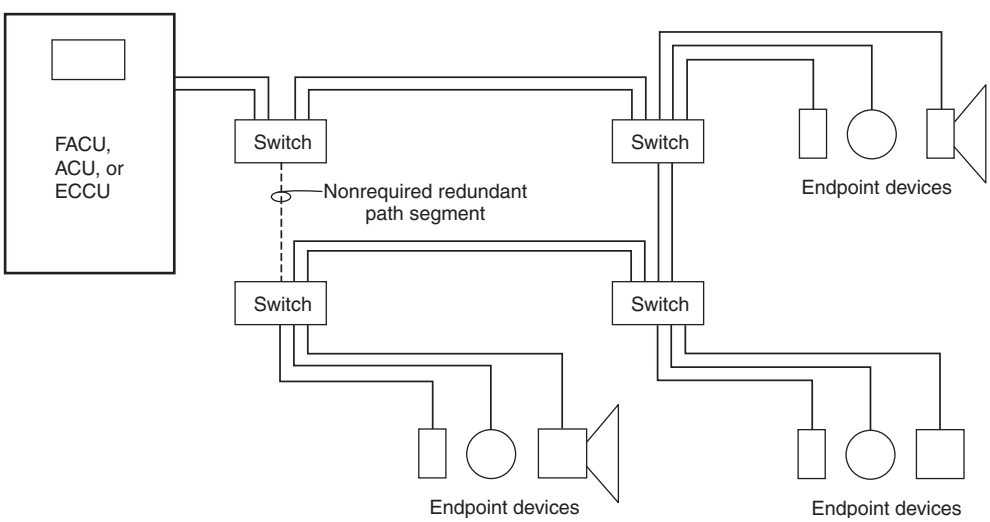

FIGURE A.12.3.6(1)(b) *Class N Pathway Block Diagram – Example 2.*

Class N pathways can use metallic conductor communications cable, such as a 100 ohm balanced twisted pair (e.g., Category 5E), including single-pair or multi-pair cable, or other communications media, such as optical fiber cable or wireless transmission, or a combination of two or more such transport mediums.

Where a conductor-based media is used for Class N, the intention is not to monitor faults on individual conductors but rather to monitor the operational capability and performance of the pathway as a whole. Similar to Class C, end-to-end verification is used in Class N.

Primary and required redundant pathways are independently and continuously verified for their ability to support end-to-end communications to and from each endpoint device and its associated control equipment. Pathway segments that service more than one device must have at least one verified redundant pathway segment. Should any primary pathway segment fail, communication is supported by the redundant pathway segment(s.) Failure of either a primary or redundant pathway will indicate a trouble.

Redundant pathway segments are generally independent and do not normally share media with the primary pathways. However, there are exceptions, such as different frequencies for wireless components, or ring topologies. *[See Figure A.12.3.6(5).]*

A Class N network can be made more reliable with physically distinct pathway segments (i.e., an alternate conduit, or cable tray route, or wireless transmission frequency range, or a combination of distinct media). In addition to the required primary segments and redundant segments, a Class N pathway is permitted to have nonrequired segments.*[See Figure A.12.3.6(1)(c).]* Additional nonrequired pathway segments are allowed to be connected and not independently monitored for integrity as long as two paths are monitored to meet the redundancy requirement of Class N.

Traditionally, NFPA has used the word *device* for input components and the term *appliance* for components used in notification. With respect to Class N, the term *device* includes appliances and other intelligent, addressable components that perform a programmable input or output function. Examples of Class N devices include the following:

(1) Input components such as alarm initiating modules switches and sensors
(2) Output components such as output modules, Ethernet loudspeakers (i.e., IEEE 802.3af PoE loudspeakers), intelligent visual notification appliances (strobes), textual signage, and intelligent audio amplifiers

Transmission equipment components (e.g., media converters, Ethernet switches, patch panels, cross-connects) are connected to the Class N pathway merely to transport instructions between other equipment. As such, they are not considered devices with respect to Class N pathways.

The audio amplifier listed above is an example of an addressable device that can receive a digital audio input from the Class N pathway and then provide a notification appliance circuit (NAC) output with Class A, B, or X pathways. Other endpoint devices can similarly provide alternate class pathways for visual notification appliances (strobes) (NACs) or initiating devices (IDCs). From the perspective of the Class N pathway, communications terminate at this endpoint device. However, since these types of endpoints can support multiple notification appliance devices or initiating devices, path segments are subject to the redundant pathway requirement unless protected in an enclosure or raceway less than 20 ft (6 m) in length. *(See 12.6.9). [See Figure A.12.3.6(1)(c).]*

Class N connections between control equipment are required to have redundant monitored pathway segments if a failure of a primary pathway segment in between control equipment could impair the operation of the control equipment. *[See Figure A.12.3.6(1)(d).]*

Class N is also permitted to include dual port devices that provide both transmission and input/output functions. Endpoint devices can have multiple connection ports and support dual pathway segment connections; thus the term *endpoint device* is not intended to prohibit more than one connection to a device. Even with dual connections, where other devices depend

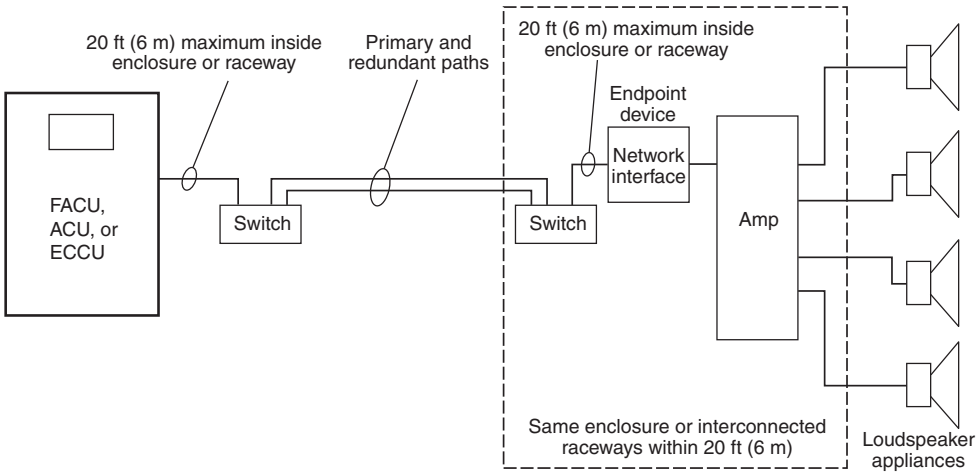

Δ ***FIGURE A.12.3.6(1)(c)*** *Class N Pathway to Endpoint with Multiple Devices.*

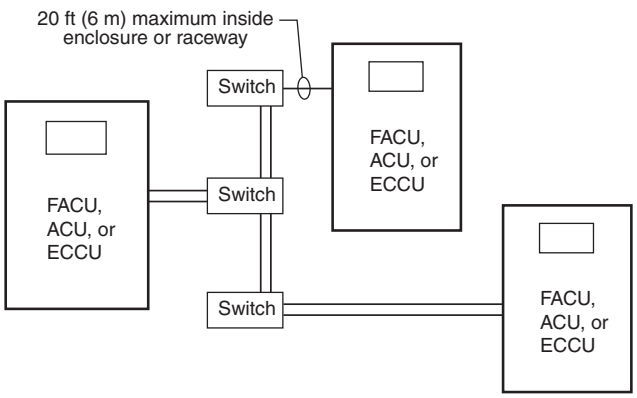

FIGURE A.12.3.6(1)(d) *Class N Pathway Block Diagram with Multiple Control Units.*

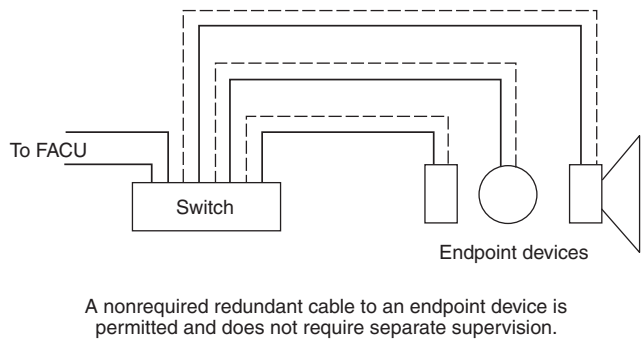

FIGURE A.12.3.6(1)(e) *Class N Pathway Block Diagram with Device with Dual Pathway Connection.*

on the path, primary and redundant paths are required. But, where an endpoint device has two connection ports, and when a secondary nonrequired connection is added, there is no requirement to separately supervise the nonrequired redundant pathway segment. *[See Figure A.12.3.6(1)(e).]*

A.12.3.6(4) Operational conditions of the pathway include factors such as latency, throughput, response time, arrival rate, utilization, bandwidth, and loss. Life safety equipment connected to a Class N network actively monitors some or all of the pathway's operational conditions so that an improperly installed or configured pathway or a subsequently degraded pathway or segment is detected by the life safety equipment and reported as a trouble. The trouble condition is reported when operational conditions of the pathway(s) have deteriorated to the point where the equipment is no longer capable of meeting its minimum performance requirements, even if some level of communication to devices is still maintained. Performance requirements include the activation of an alarm within 10 seconds, the reporting of a trouble signal within 200 seconds, and delivery of audio messages with required

intelligibility. End-to-end communications might be operational under system idle conditions, but in the event of an alarm, the increased load on a degraded pathway could cause a partial or complete failure to deliver required life safety signals. Such predictable failure must be actively detected and reported.

A.12.3.6(5) Devices with dual path connections are permitted to be connected in a daisy-chain of devices on a ring. Again, where Class N pathway segments support multiple devices, verified redundant pathway segment(s) are required. This can be accomplished with a ring topology, as long as each segment of the ring is verified as functional, and the failure of any one segment does not result in the loss of functionality of more than one device. In this arrangement, primary and redundant pathway segments share the same media, and provide two possible directions of communications in a ring topology *[see Figure A.12.3.6(5)]*. This daisy-chain configuration is also permitted between multiple control units that require verified primary and redundant pathway segments.

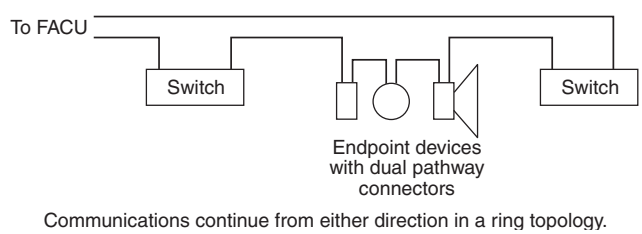

FIGURE A.12.3.6(5) *Class N Pathway Block Diagram with Daisy-Chained Devices with Dual Pathway Connection.*

12.3.7 Class X. A pathway shall be designated as Class X when it performs as follows:

(1) It includes a redundant path.
(2) Operational capability continues past a single open, and the single open fault results in the annunciation of a trouble signal.
(3) Operational capability on metallic conductors continues past a single short-circuit, and the single short-circuit fault results in the annunciation of a trouble signal.
(4) Operational capability on metallic conductors continues past a combination open fault and ground fault.
(5) Conditions that affect the intended operation of the path are annunciated as a trouble signal.
(6) Operational capability on metallic conductors is maintained during the application of a single ground fault.
(7) A single ground condition on metallic conductors results in the annunciation of a trouble signal.

Δ **12.3.8* Class A, Class N, and Class X Pathway Separation.** Class A, Class N, and Class X circuits using physical conductors (e.g., metallic, optical fiber) shall be installed so that the primary and redundant, or outgoing and return, conductors exiting from and returning to the control unit, respectively, are routed separately.

A.12.3.8 A goal of 12.3.8 is to provide adequate separation between the outgoing and return cables. This separation is required to help ensure protection of the cables from

physical damage. The recommended minimum separation to prevent physical damage is 12 in. (300 mm) where the cable is installed vertically and 48 in. (1.22 m) where the cable is installed horizontally.

Separation of outgoing and return conductors minimizes the potential for complete loss of the circuit due to mechanical damage at a single location. Installing all the conductors in one cable or conduit subjects the pathway to complete loss if the cable or conduit is cut or otherwise damaged.

The separation distances in A.12.3.8 are recommended minimums. The 12 in. (300 mm) separation distance in vertical installations is the minimum size of most vertical pipe or wiring chases in existing buildings. The minimum 48 in. (1.22 m) separation recommended for horizontal installations is the minimum width of most corridors in existing buildings. The idea is that in the worst case, the outgoing conductors would follow one side of the chase or corridor, and the return conductors would follow the opposite side. Ideally, the conductors would be separated as far as possible to ensure protection from mechanical damage.

12.3.8.1 The outgoing and return (redundant) circuit conductors shall be permitted in the same cable assembly (i.e., multiconductor cable), enclosure, or raceway only under the following conditions:

(1) For a distance not to exceed 10 ft (3.0 m) where the outgoing and return conductors enter or exit the initiating device, notification appliance, or control unit enclosures
(2) Single drops installed in the raceway to individual devices or appliances
(3)* In a single room not exceeding 1000 ft^2 (93 m^2) in area, a drop installed in the raceway to multiple devices or appliances that does not include any emergency control function devices

In general, redundant pathways should be physically separated to provide some protection against a single point of failure from disabling the entire circuit or pathway. This separation minimizes the potential loss of all pathway functionality due to severing of a single cable, conduit, or raceway. This paragraph address situations in which a single event might disrupt operation of a single device or appliance or all devices and appliances in a limited area but would not generally result in loss of function for the entire pathway.

Paragraph 12.3.8.1(1) applies to cable assemblies, enclosures, and raceways. Exhibit 12.3 illustrates 12.3.8.1(1).

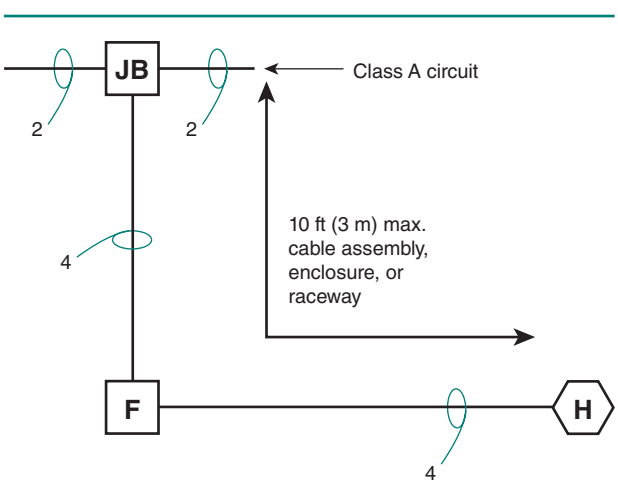

EXHIBIT 12.3

Use of the 10 ft (3.0 m) Allowance.

Paragraph 12.3.8.1(2) applies only to conduit/raceway systems and not to cables. A drop to a single device or appliance limits exposure of the conductors. Even if all four conductors to the device or appliance were cut or damaged by fire, only the single device or appliance would be lost. Exhibit 12.4 illustrates 12.3.8.1(2).

Paragraph 12.3.8.1(3) applies only to conduit/raceway systems and not to cables. A drop to a room of 1000 ft² (93 m²) or less in size limits exposure of the circuit. Even if all four conductors to the room are cut or damaged, only a small number of devices or appliances are likely to be lost. Exhibit 12.5 illustrates 12.3.8.1(3). However, rooms that contain emergency control function interface devices (i.e., control modules/relays connected to and programmed to shutdown HVAC units and other fire and life safety control functions) are excluded. The loss of both "legs" of this circuit could disable important fire and life safety control functions that might be essential for preservation of recirculation of smoke or some other required operation, such as elevator recall functions.

EXHIBIT 12.4

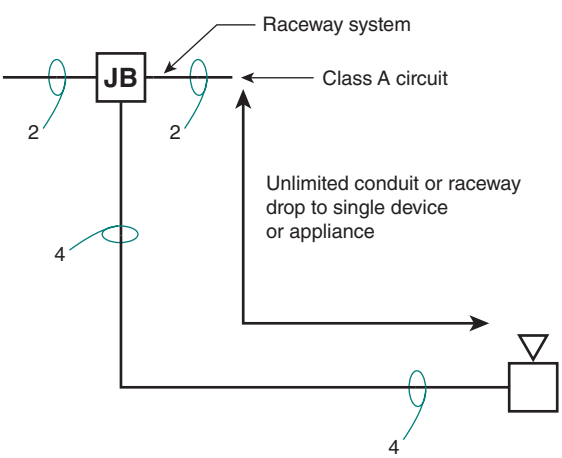

Single Drop to Individual Device or Appliance.

EXHIBIT 12.5

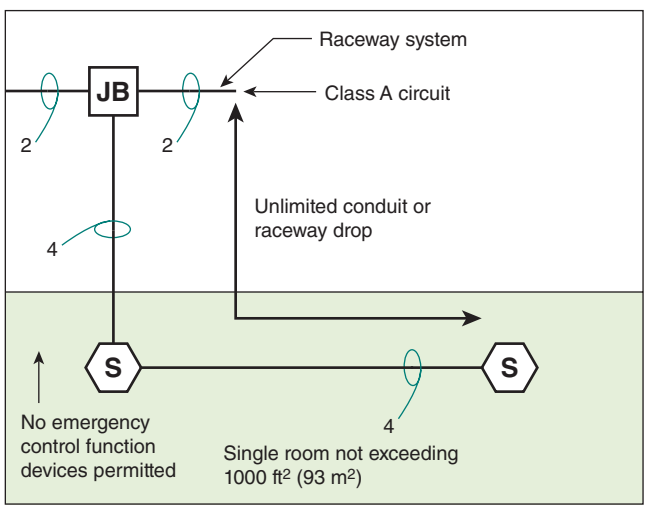

Single Drop to Single Room Not Exceeding 1000 ft² (93 m²).

A.12.3.8.1(3) This exception would not permit an entire room of emergency control function interface devices controlled by the fire alarm system to be installed on a circuit where the feed and return legs are installed in the same raceway for rooms smaller than 1000 ft² (93 m²) in area.

Where a circuit enters a room that contains emergency control function interface devices (e.g., control modules/relays connected to and programmed to shut down HVAC units and other fire and life safety control functions), loss of both "legs" of this circuit could disable important fire and life safety control functions that might be essential for prevention of circulation of smoke or another required operation, such as elevator recall functions.

12.4* Pathway Survivability.

All pathways shall comply with *NFPA 70*.

System Design Tip

Chapter 12 does not require a specific level of survivability, but it provides options when other chapters, codes, standards, or authorities having jurisdiction require survivability. Prescriptive requirements

for pathway survivability appear in the Code for pathways included as a part of emergency communications systems (ECSs) (see 24.3.14 and 24.4.8.6.4) and a part of public emergency alarm reporting systems (see 27.6.3.1.3). Additionally, where survivability of circuits (or pathways) is required by another section of the Code, equal protection is required to be provided for secondary power supply circuits (see 10.6.11.3.1.3).

The designer is permitted, and in some cases required, to conduct an analysis, document the approach, and provide technical justification for the pathway survivability selected (see 23.10.3, 24.3.14.3, 24.3.14.12, and 24.5.4.2). This approach is similar to other requirements in the Code in which the system designer is responsible for conducting an analysis to determine the level of class of pathways (see 7.3.9.1 and 23.4.3.1).

Although levels of survivability are listed in ascending numerical order, the order does not mean that one level of survivability is preferred over another for a specific application.

Pathway survivability addresses protection from fire events, except for mass notification systems (MNSs), for which the Code specifically cites that the designer is required to consider both fire and nonfire emergencies when determining risk tolerances for survivability (see 24.3.12.2). For the definition of the term *pathway survivability,* see 3.3.198.

System Design Tip

A.12.4 The intent of the pathway survivability designation is to provide options for the protection of the pathway circuits and not to create a hierarchical ranking. Other chapters within *NFPA 72* or other code-making jurisdictions can select the survivability option that best meets their needs.

12.4.1 Pathway Survivability Level 0. Level 0 pathways shall not be required to have any provisions for pathway survivability.

12.4.2 Pathway Survivability Level 1. Pathway survivability Level 1 shall consist of pathways in buildings that are fully protected by an automatic sprinkler system in accordance with NFPA 13 with any interconnecting conductors, cables, or other physical pathways protected by metal raceways or metal armored cables.

The purpose of installed sprinklers in a building is not necessarily to protect fire alarm circuits. Even in a space protected by sprinklers, the fire alarm system circuits may burn through before sprinkler activation. The sprinklers improve the overall survivability of the building and, therefore, reduce the requirement for survivability of the circuits.

12.4.3* Pathway Survivability Level 2. Pathway survivability Level 2 shall consist of one or more of the following:

(1) 2-hour fire-rated circuit integrity (CI) or fire-resistive cable
(2) 2-hour fire-rated cable system [electrical circuit protective system(s)]
(3) 2-hour fire-rated enclosure or protected area
(4)* Performance alternatives approved by the authority having jurisdiction

Exhibit 12.6 illustrates Level 2 survivability where the pathway of the Class B NAC is installed with a 2-hour fire-rated CI cable, 2-hour fire-resistive cable, or 2-hour fire-rated cable system.

Exhibit 12.7 illustrates Level 2 survivability where the pathway of the Class B NAC is installed with a 2-hour fire-rated enclosure — in this case, inside a shaft.

EXHIBIT 12.6

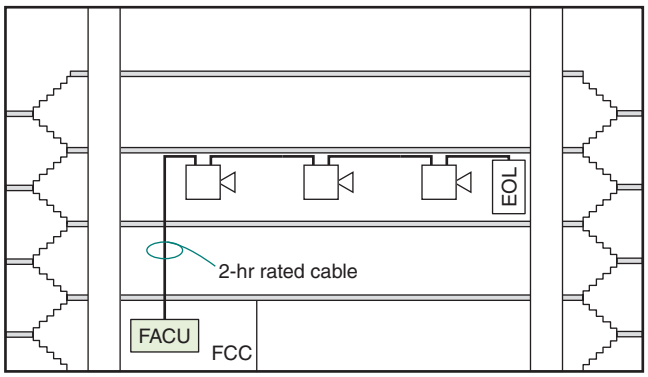

Note: This option can be used when it is not possible or desirable to use a 2-hour rated enclosure.

Level 2 Survivability, Using a Class B NAC Riser in a 2-hr Rated Cable Assembly.

EXHIBIT 12.7

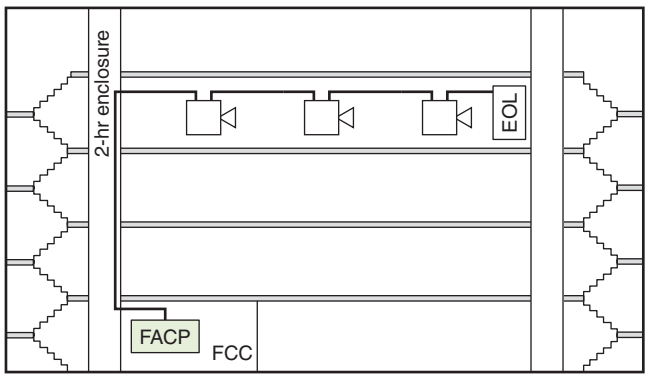

Note: This option can be used in lieu of a 2-hour rated cable.

Level 2 Survivability, Using a Class B NAC Riser in a 2-hr Rated Shaft or Enclosure.

A.12.4.3 Methods of survivability protection might alternate within a protected premise. For example, 2-hour fire-resistive cable might extend from a 2-hour fire-resistance-rated enclosure.

Fire alarm system notification appliances, control modules, jacks, and initiating devices are not capable of resisting attack by fire. Connecting these devices to circuits that require survivability and span multiple zones or floors, will result in a circuit that is no longer survivable. For example, two-way, in-building communications system (fire fighter's telephone) jacks that are connected to a circuit serving multiple floors could be shorted by the fire. It is recommended that a Level 2 or Level 3 survivable circuit serving multiple zones or floors be installed as Class X or Class N or those circuits be designed to serve a single fire zone.

System Design Tip

This new annex text alerts users that even though the fire alarm circuit might be protected and survivable, there are devices or equipment that are connected to the circuit that could result in an increased risk of losing survivability. The designer may wish to use a different circuit type, such as Class N or Class X, for circuit survivability and integrity.

Survivability of a circuit must involve interconnected equipment not just the interconnected cables. For example, a circuit with survivability level may be rendered ineffective if the junction box is incapable of providing the same level of protection.

A.12.4.3(4) A performance-based alternative is needed because it is possible to construct a nonsprinklered, Type V(000) building that employs relocation or partial evacuation (e.g., a single-story ambulatory health care occupancy) that would not warrant either a 2-hour fire-resistive-rated enclosure or a 2-hour cable. Examples of performance alternatives that might be considered in a design for survivability are a strategic application of Class A, Class X, or Class N segments and also wireless communications pathways.

12.4.4* Pathway Survivability Level 3. Pathway survivability Level 3 shall consist of pathways in buildings that are fully protected by an automatic sprinkler system in accordance with NFPA 13 and one or more of the following:

(1) 2-hour fire-rated circuit integrity (CI) or fire-resistive cable
(2) 2-hour fire-rated cable system [electrical circuit protective system(s)]
(3) 2-hour fire-rated enclosure or protected area
(4)* Performance alternatives approved by the authority having jurisdiction

Subsections 12.4.3 and 12.4.4 each include a list of four methods for ensuring pathway survivability.

Fire alarm CI cables are addressed among the types of cables that are permitted in Article 760 of the *NEC*. A "CI" suffix is added to identify cable types that meet circuit integrity requirements. For example, Type NPLF-CI is a general-purpose (excluding riser, ducts, plenums, and other space used for environmental air) non-PLFA CI cable, and Type FPL-CI is a general-purpose PLFA CI cable. Also refer to the test methods used to evaluate the fire-resistive performance of cables in UL 2196, *Standard for Fire Test for Circuit Integrity of Fire-Resistive Power, Instrumentation, Control and Data Cables.*

Fire-resistive cable systems, described in 12.4.3(1) and 12.4.4(1), are cables and components used to ensure survivability of critical circuits for a specified time under fire conditions and are addressed in Article 728 of the *NEC*. An "FRR" suffix is added with the circuit integrity duration in hours, along with the system identifier.

An electrical circuit protective system, described in 12.4.3(2) and 12.4.4(2), is a system of cables and other materials designed and evaluated for electrical circuit integrity when exposed to a fire. The installation of these systems requires compliance with procedures using materials evaluated as a part of the listing of these systems as well as applicable *NEC* articles, such as Article 332 for mineral-insulated (Type MI) cable. Also refer to UL 1724, *Outline of Investigation for Fire Tests for Electrical Circuit Protective Systems*.

Exhibits 12.8 and 12.9 show examples of CI cable and Type MI cable.

The UL *Fire Resistance Directory,* Volume 2, identifies many types of construction that provide a 2-hour fire resistance rating. The enclosure, often a shaft, can be constructed of masonry, concrete, or an assembly of classified products, such as metal studs and gypsum wallboard. To attain the desired fire rating, the enclosure must be constructed exactly as required by the listing. Any penetrations in the enclosure must be sealed in a manner that provides a fire resistance rating equivalent to the enclosure.

Two-hour fire-rated enclosures include 2-hour fire-rated exit stairwells, where building codes permit their use. A 2-hour fire-rated protected area can be a room or another space that is constructed with materials that provide a 2-hour fire resistance rating, but it does not necessarily have to be a shaft. Equipment protecting stairwells, such as stair pressurization systems, are installed in a fire-rated protected area matching the fire resistance rating of the stairwell.

The authority having jurisdiction may approve other methods of providing protection. This might be a combination of installation methods and protection by the building structure. Technical justification must be provided by the designer to support the survivability design.

System Design Tip

N **A.12.4.4** See A.12.4.3.

A.12.4.4(4) A performance-based alternative is needed because it is possible to construct a sprinklered single-story Type V(111) or multistory Type II(111) building that employs

EXHIBIT 12.8

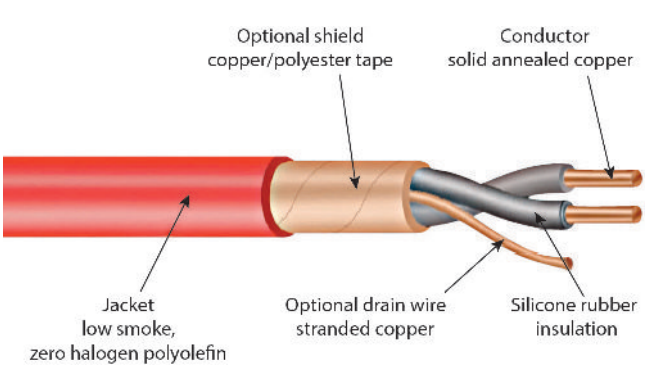

Circuit Integrity (CI) Cable. (Source: Tyco Thermal Controls, Menlo Park, CA)

EXHIBIT 12.9

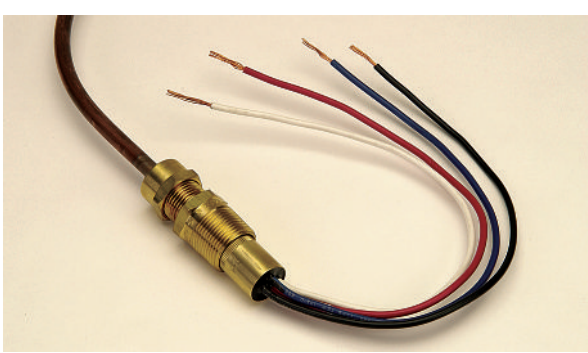

Mineral-Insulated (MI) Cable – Part of Electrical Circuit Protective System. [Source: Tyco Thermal Controls (Canada) Ltd./Pyrotenax]

relocation or partial evacuation (e.g., a health care occupancy) that would not warrant either a 2-hour fire-resistive-rated enclosure or a 2-hour cable (a 1-hour enclosure would suffice). Examples of performance alternatives that might be considered in a design for survivability are a strategic application of Class A, Class X, or Class N segments and also wireless communications pathways.

12.5* Shared Pathway Designations.

Shared pathways shall be designated as Level 0, Level 1, Level 2, or Level 3, depending on their performance.

Subsections 12.5.1 through 12.5.4 provide pathway designations for circuits when they are being considered for both life safety and non–life safety applications. For example, 23.8.2.6 permits SLCs to be shared; all signal control and transport equipment (e.g., routers, servers) located in a critical fire alarm or emergency control function interface device signaling path are required to be listed for fire alarm service unless they satisfy all of the conditions of 23.8.2.6.1 or use a listed barrier gateway in accordance with 23.8.2.6.2. Also see 23.8.2.6.3 where Class N is used.

Shared pathways are permitted, but 23.6.3.1 does not permit Class N circuits to be accessible to the public or to untrained personnel.

The Code does not address Ethernet beyond its use in combination systems (23.8.4), connections to other non-fire systems (23.8.2.6.3), MNS interface with other systems, and supervising station transmission off-site using IP networks (see 26.6.3).

There are strict requirements for network or Ethernet cabling infrastructures that incorporate the fire alarm system interconnections. Class N networks should be stand-alone to ensure reliability. However, if a shared network is preferred, then 23.6.3.2 requires approval of the authority having jurisdiction, based on a written analysis, deployment plan, maintenance plan, and Class N network analysis. These requirements minimize the likelihood of unintentional tampering by unqualified persons.

An identified and certified organization is required to manage the shared network. Additionally, the analysis must be made of the shared network to ensure it will always work during the life of the system installation. See 23.6.3.5.

If an SLC is shared with the network, listed equipment is needed that meets the environmental and operational requirements of the Code. Connection to the network must include barrier gateways so that any other non-fire equipment connected to the network will not interfere with the fire alarm system operation. Shared networks also fall under the requirements of 23.8.4, combinations systems.

System Design Tip

Section 12.5 establishes designations for shared pathways in terms of how life safety data and non–life safety data are prioritized or segregated. The use or assignment of these designations for a particular application is determined on the basis of evaluations performed by the system designer to meet system design criteria. These designations provide a common means of communicating the requirements at a particular installation. They also allow for transitions between different areas, buildings, or functions. For example, one area of the building might be specified to comply with Shared Pathway Level 2, and paths between buildings might be specified to comply with Shared Pathway Level 1. Unique application requirements and feasibility play a role in deciding which shared pathway to specify. The term *life safety data* in this section is referring to all signals generated by the life safety system; the section does not create a division between fire alarm, supervisory, and trouble signals generated within a life safety system.

Although similarly designated, shared pathway level designations (Section 12.5) are separate and different from pathway survivability levels (Section 12.4). The shared pathway designations specify how data must be handled on circuits and equipment when the pathways are shared between life safety

data and non–life safety data. Regarding shared pathway designations, three terms are used: *prioritize*, *segregate*, and *dedicated*. *Prioritize* pertains to the importance of signaling; life safety data is given precedence and is to be processed before non–life safety data. *Segregate* is the separation of data so that life safety data are not mixed with non–life safety data, as would be the case where life safety data are processed on the same network but are handled (or contained) separately, as within a VPN tunnel or VLAN, thus establishing data segregation. *Dedicated* applies to the Level 3 pathway and equipment, which must not be shared.

The three established criteria for shared pathways levels pertain to the following:

1. Prioritization of life safety system data over non–life safety system data
2. Segregation on common pathways or not
3. Dedication of all equipment and cables to the life safety system

A.12.5 Shared pathway designations propose a list of shared pathways, some of which are only allowable for nonrequired functions. Other sections of this Code determine which of the shared pathways are allowed to be used as paths for required fire alarm signaling. Refer to 23.8.2.6 for shared communications requirements.

12.5.1* Shared Pathway Level 0. Level 0 pathways shall not be required to segregate or prioritize life safety data from non–life safety data.

A.12.5.1 In a Shared Pathway Level 0, common equipment can be used to establish life safety and non–life safety pathways.

Prioritization and segregation are not required for Shared Pathway Level 0; that is, both life safety data and non–life safety data can have equal priority and be conveyed together. Shared Pathway Level 1, Shared Pathway Level 2, and Shared Pathway Level 3 pathways and their equipment are required to be more robust. Shared Pathway Level 1 does not require segregation of life safety data from non–life safety data, but prioritization is required. Shared Pathway Level 2 permits common equipment but requires segregation of data. Shared Pathway Level 3 requires dedicated equipment for life safety data; equipment cannot be shared.

12.5.2* Shared Pathway Level 1. Level 1 pathways shall not be required to segregate life safety data from non–life safety data, but shall prioritize all life safety data over non–life safety data.

A.12.5.2 In a Shared Pathway Level 1, common equipment can be used to establish life safety and non–life safety pathways.

12.5.3* Shared Pathway Level 2. Level 2 pathways shall segregate all life safety data from non–life safety data.

A.12.5.3 In a Shared Pathway Level 2, common equipment can be used to establish life safety and non–life safety pathways.

12.5.4* Shared Pathway Level 3. Level 3 pathways shall use equipment that is dedicated to the life safety system.

Class N circuits are required by 23.6.3 to use Shared Pathway Level 3 except as permitted by 23.6.3.2. See the commentary following Section 12.5.

A.12.5.4 In a Shared Pathway Level 3, life safety equipment is not shared with equipment of non–life safety systems.

12.6* Monitoring Integrity and Circuit Performance of Installation Conductors and Other Signaling Channels.

A.12.6 The provision of a double loop or other multiple path conductor or circuit to avoid electrical monitoring is not acceptable.

Subsection 12.6.1 requires that a trouble signal be activated when any installer's connection to a device or appliance is opened. Many installers loop the conductor around the terminal without cutting the conductor and making the necessary two connections. If the wire is disconnected from the terminal, trouble may not be indicated. This practice is in violation of the Code. If a listed device installed on an IDC is furnished with pigtail connections, the installer must use separate in/out wires for each circuit passing into or through the device to prevent T-tapping of the device connections.

However, addressable devices on SLCs typically use an interrogation/response routine to monitor for integrity. Some types of SLCs can be wired without duplicate terminals; they are often T-tapped. The control unit interrogates each device on a regular basis and "knows" when a device has become disconnected.

Exhibit 12.10 shows a schematic example of how a device on an IDC should and should not be connected. Exhibits 12.11 and 12.12 illustrate typical field-wired equipment with duplicate terminal/leads.

FAQ Where is T-tapping allowed, and where is it not allowed?

T-tapping is an acceptable practice for Class B SLCs when allowed by the designer. T-tapping is never allowed on an initiating device circuit, a notification appliance circuit, or a Class A or Class X SLC. Note that pathway class designations are addressed in Section 12.3.

Exhibit 12.13 shows an example of where T-tapping is permitted.

System Design Tip

EXHIBIT 12.10

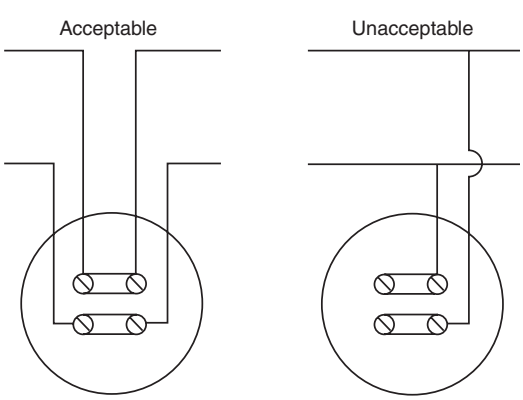

Acceptable and Unacceptable Connection of Device on Initiating Device Circuit.

EXHIBIT 12.11

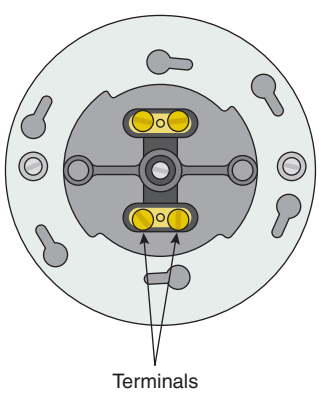

Initiating Device Base Showing Duplicate Terminals.

EXHIBIT 12.12

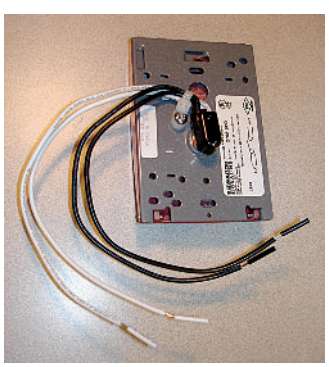

Initiating Device Showing Duplicate Leads. (Source: Edwards, Mebane, NC)

12.6.1 Unless otherwise permitted or required by 12.3.1 through 12.3.7 and 12.6.3 through 12.6.13, all means of interconnecting equipment, devices, and appliances and wiring connections shall be monitored for the integrity of the interconnecting conductors or equivalent path so that the occurrence of a single open or a single ground-fault condition in the installation conductors or other signaling channels is automatically indicated within 200 seconds.

EXHIBIT 12.13

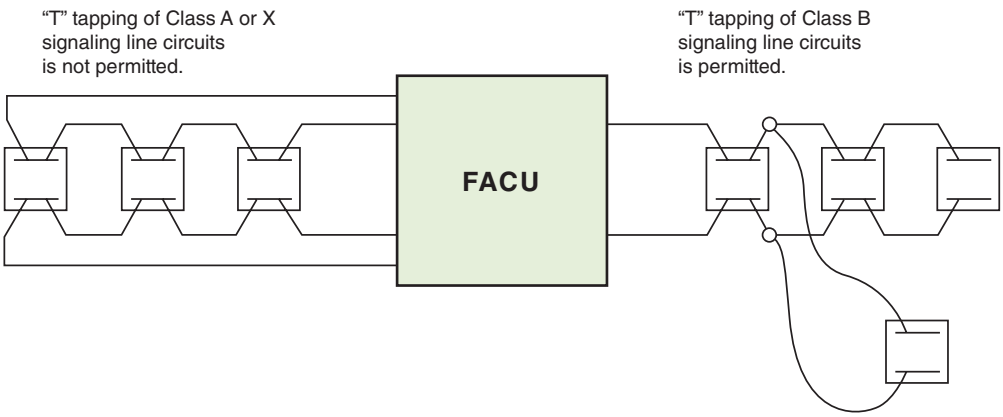

T-Tapping in Class B Signaling Line Circuits.

12.6.2 Unless otherwise permitted or required by 12.3.1 through 12.3.7 and 12.6.3 through 12.6.13, all means of interconnecting equipment, devices, and appliances and wiring connections shall be monitored for the integrity of the interconnecting conductors or equivalent path so that the restoration to normal of a single open or a single ground-fault condition in the installation conductors or other signaling channels is automatically indicated within 200 seconds.

12.6.3 Shorts between conductors shall not be required to be monitored for integrity, unless required by 12.6.15, 12.6.16, and 10.19.2.

12.6.4 Monitoring for integrity shall not be required for a noninterfering shunt circuit, provided that a fault circuit condition on the shunt circuit wiring results only in the loss of the noninterfering feature of operation.

12.6.5 Monitoring for integrity shall not be required for connections to and between supplementary system components, provided that a single open, ground-fault, or short-circuit conditions of the supplementary equipment or interconnecting means, or both, do not affect the required operation of the fire alarm and/or signaling system.

See the commentary following the definition of the term *supplementary* (see 3.3.296) for further explanation.

12.6.6 Monitoring for integrity shall not be required for the circuit of an alarm notification appliance installed in the same room with the central control equipment, provided that the notification appliance circuit conductors are installed in conduit or are equivalently protected against mechanical injury.

12.6.7 Monitoring for integrity shall not be required for a trouble notification appliance circuit.

12.6.8* Monitoring for integrity shall not be required for the interconnection between listed equipment within a common enclosure.

A.12.6.8 This Code does not have jurisdiction over the monitoring integrity of conductors within equipment, devices, or appliances.

The requirement for monitoring applies only to installed conductors. The wiring within equipment, devices, or appliances is not required to be monitored for integrity.

12.6.9 Monitoring for integrity shall not be required for the interconnection between enclosures containing control equipment located within 20 ft (6 m) of each other where the conductors are installed in conduit or equivalently protected against mechanical injury.

12.6.10 Monitoring for integrity shall not be required for the conductors for ground-fault detection where a single ground-fault does not prevent the required normal operation of the system.

12.6.11 Monitoring for integrity shall not be required for pneumatic rate-of-rise systems of the continuous line type in which the wiring terminals of such devices are connected in multiple across electrically supervised circuits.

12.6.12 Monitoring for integrity shall not be required for the interconnecting wiring of a stationary computer and the computer's keyboard, video monitor, mouse-type device, or touch screen, as long as the interconnecting wiring does not exceed 8 ft (2.4 m) in length; is a listed computer/data processing cable as permitted by *NFPA 70*; and failure of cable does not cause the failure of the required system functions not initiated from the keyboard, mouse, or touch screen.

The interconnecting wiring of certain listed equipment does not have to be monitored for integrity if a stated length of a particular type of cable is used and if a cable failure does not prevent the fire alarm system from performing a required system function.

12.6.13 Monitoring for integrity of the installation conductors for a ground-fault condition shall not be required for the communications and transmission channels extending from a supervising station to a subsidiary station(s) or protected premises, or both, that comply with the requirements of Chapter 26 and are electrically isolated from the fire alarm system (or circuits) by a transmitter(s).

12.6.14 Interconnection means shall be arranged so that a single break or single ground-fault does not cause an alarm signal.

12.6.15 A wire-to-wire short-circuit fault on any alarm notification appliance circuit shall result in a trouble signal in accordance with Section 10.15, except as permitted by 12.6.5, 12.6.6, or 12.6.11.

12.6.16 Where two or more systems are interconnected, the systems shall be connected using Class A, B, N, or X circuits as described in Section 12.3.

When two or more systems are interconnected, the interconnecting circuit conductors must be monitored for integrity. The systems may be interconnected fire alarm systems or a fire alarm system and an ECS that are being interconnected and integrated. Also see 23.8.2.7.

12.7* Nomenclature.

The following nomenclature shall be used to identify the required properties of the system(s) interconnections and survivability:

(1) System(s) interconnections
(2) Survivability levels (not required if Level 0)
(3) Shared pathway levels (not required if Level 0)

A.12.7 The nomenclature described in Section 12.7 can be found on drawings, specifications, and the actual installed circuits. Some examples of the nomenclature are X.2.3, A, B.3.

This section explains the nomenclature for describing the pathway class designation, survivability level, and shared pathway level. The nomenclature "system(s) interconnections" in 12.7(1) refers to the pathway class designation. As an example, a Class B pathway installed to provide survivability Level 3 in a building fully protected by automatic sprinklers designed and installed in accordance with NFPA 13, *Standard for the Installation of Sprinkler Systems*, would be designated as B.3. If no level of survivability is designated, it is considered to be Level 0.

Further examples (not all inclusive) are as follows:

- Designation A.0 — A Class A pathway installed to provide survivability Level 0 (see 12.4.1)
- Designation A.1 — A Class A pathway installed to provide survivability Level 1 installed in a building fully protected by an NFPA 13–compliant automatic sprinkler system (see 12.4.2)
- Designation A.2 — A Class A pathway installed to provide survivability Level 2 by using a 2-hour fire-rated cable system (see 12.4.3)
- Designation A.3 — A Class A pathway installed to provide survivability Level 3 installed in a building fully protected by an NFPA 13–compliant automatic sprinkler system and 2-hour fire-rated enclosures (see 12.4.4)

Where shared pathway designations are also used, an additional number could be added to the designation. For example, designation A.3.1 would reflect the following:

1. Class A pathway
2. Level 3 survivability in a building fully protected by an NFPA 13–compliant automatic sprinkler system and 2-hour fire-rated enclosures
3. Shared Level 1 pathways that are not required to segregate life safety data from non–life safety data, but prioritize all life safety data over non–life safety data

References Cited in Commentary

NFPA 13, *Standard for the Installation of Sprinkler Systems*, 2019 edition, National Fire Protection Association, Quincy, MA.

NFPA 70®, *National Electrical Code®*, 2017 edition, National Fire Protection Association, Quincy, MA.

UL 497B, *Standard for Protectors for Data Communications and Fire-Alarm Circuits*, Underwriters Laboratories Inc., Northbrook, IL, 2004, 4th Edition.

UL 1724, *Outline of Investigation for Fire Tests for Electrical Circuit Protective Systems,* Underwriters Laboratories Inc., Northbrook, IL, 2006.

UL 2196, *Standard for Fire Test for Circuit Integrity of Fire-Resistive Power, Instrumentation, Control and Data Cables*, Underwriters Laboratories Inc., Northbrook, IL, 2017, 2nd Edition.

UL *Fire Resistance Directory,* Volume 2, Underwriters Laboratories Inc., Northbrook, IL, 2016.

Reserved Chapter

In the 2019 edition of *NFPA 72®*, *National Fire Alarm and Signaling Code®*, Chapter 13 is reserved for future use.

Inspection, Testing, and Maintenance

CHAPTER 14

Chapter 14 covers the minimum requirements for inspection, testing, and maintenance of fire alarm systems, supervising station alarm systems, public emergency alarm reporting systems, emergency communications systems (ECSs), single- and multiple-station smoke, heat, and CO alarms, and household signaling systems. Also included are requirements for visual inspections and inspection frequencies, testing and test methods, testing frequencies, maintenance requirements, and record keeping.

The requirements of Chapter 1 apply in addition to those of Chapter 14. The use of equivalent test methods or test devices is permitted by the Code, provided their use complies with the equivalency requirements in Section 1.5. Equivalent methods or devices must meet the objectives of the requirements of Chapter 14, and evidence demonstrating equivalence must be provided to the authority having jurisdiction on request.

There are few significant differences in Chapter 14 between the 2016 and 2019 editions other than additional clarifications and minor reorganization. The following list summarizes the changes:

- Completely revised the inspection, testing, and maintenance requirements for batteries used as the secondary power source for signaling systems.
- Updated the requirements to reflect current battery technologies and terminology. The revisions include deletion of requirements for nickel cadmium and other batteries, which are not, and have never been, commonly used in fire alarm and signaling systems.

The scope of the inspection, testing, and maintenance requirements of *NFPA 72®*, *National Fire Alarm and Signaling Code®* as they might apply to other systems interfaced with the fire alarm or signaling system in a building is a common concern. While fire alarm systems interface with, monitor, and sometimes control a variety of other building fire protection systems and features, the requirements of *NFPA 72* cover only the fire alarm and protective signaling systems. The inspection, testing, and maintenance of other building fire safety systems and features are to be addressed by the relevant codes and standards.

In practice, the inspection, testing, and maintenance of interfaced systems — such as sprinkler systems, smoke exhaust systems, HVAC systems, elevators, and other similar systems — are often conducted at the same time as the inspection, testing, and maintenance of the fire alarm and signaling system. End-to-end testing of a fire alarm or signaling system integrated to monitor or control other building fire or life safety systems and features is the preferred means of testing. However, *NFPA 72* covers only the requirements for inspection, testing, and maintenance of the fire alarm and signaling system, not the interconnected or monitored systems.

14.1 Application.

14.1.1 The inspection, testing, and maintenance of systems, their initiating devices, and notification appliances shall comply with the requirements of this chapter.

FM

In 14.1.1 and in other text in Chapter 14, the term *system(s)* is used in place of the term *fire alarm system(s)* because the Code addresses the inspection, testing, and maintenance requirements for other systems in addition to those designated as "fire alarm systems." These systems include, but are not limited to, supervising station alarm systems, public emergency alarm reporting systems, ECSs, and other systems discussed herein (see 1.3.1 and 1.3.2 and the commentary following these subsections).

Chapter 14 addresses inspection, testing, and maintenance requirements for systems and the initiating devices and notification appliances connected to them. The installation of these systems is covered by the requirements in other chapters of the Code. Listed smoke detection devices not connected to a fire alarm system (often called stand-alone detectors) are sometimes in HVAC systems, door-releasing applications, and special hazard releasing devices. The requirements in Chapter 14, including sensitivity testing, apply to these types of detectors. Note that *smoke alarms* (defined in 3.3.275) are not tested or listed to operate door-releasing devices, HVAC controls, or special hazard systems and are not considered in this context to be stand-alone devices.

Interfaced systems, such as the fire pump installation shown in Exhibit 14.1, may be monitored by the fire alarm system, but are not tested as part of the fire alarm system. Fire pump systems are inspected and tested in accordance with the requirements of NFPA 25, *Inspection, Testing, and Maintenance of Water-Based Fire Protection Systems*.

Δ **14.1.2** The inspection, testing, and maintenance of single- and multiple-station alarms and household alarm systems shall comply with 14.4.5 and 14.4.6. (SIG-HOU)

14.1.3 Procedures that are required by other parties and that exceed the requirements of this chapter shall be permitted.

As with other requirements in the Code, the inspection, testing, and maintenance requirements are considered minimum. In some cases, the authority having jurisdiction may impose requirements that are more stringent. For example, owners of large, high-value industrial facilities may establish corporate policies requiring more frequent system testing as part of their overall risk management strategy to minimize the potential for disruption of their operations.

FM

14.1.4 The requirements of this chapter shall apply to both new and existing systems.

FAQ Are the requirements of Chapter 14 retroactive?

The requirements of Chapter 14 are retroactive as applied to an existing system because compliance does not require changes to the system equipment, devices, circuits, or functions. It is expected that the most current edition of the Code be used for inspection, testing, and maintenance of both new

EXHIBIT 14.1

Fire Pump Installation. (Courtesy of Jeffrey Moore, P.E., JENSEN HUGHES)

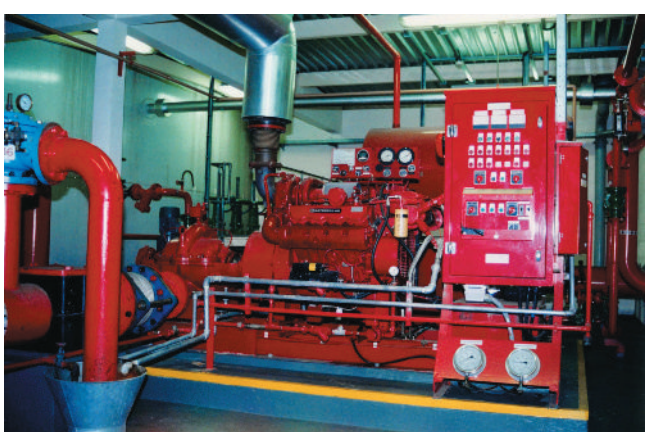

and existing fire alarm and protective signaling systems. The requirements of the other chapters are generally not retroactive and apply only to new installations. The goal is not to require changes in the function or arrangement of an existing system to comply with current inspection, testing, and maintenance requirements. For example, the Code may require testing of a feature that is common on new systems but may not be provided in an older system. It is not required to make changes to the existing system to provide a feature or function that was not part of the original system installation just to comply with an inspection or test requirement. Refer to Section 1.4 regarding retroactivity as applied in general to the Code.

14.1.5 The requirements of Chapter 7 shall apply where referenced in Chapter 14.

Chapter 7, Documentation, is the repository for all fire alarm and signaling system documentation including inspection, testing, and maintenance records.

14.2 General.

14.2.1 Purpose.

14.2.1.1* The purpose for initial and reacceptance inspections shall be to ensure compliance with approved design documents and to ensure installation in accordance with this Code and other required installation standards.

A.14.2.1.1 Initial and re-acceptance inspections are performed to ensure compliance with approved design documents whatever the quality or origin. This involves inspection to ensure that the correct equipment has been used and properly located and installed. Ensuring compliance helps to assure both operational reliability and mission reliability. This concept applies to any type of system, not just fire alarm and signaling systems. At this stage of a system's life, the responsibilities for such inspections rest with the designers of the systems and with the various applicable authorities having jurisdiction.

14.2.1.2* The purpose for initial and reacceptance tests of fire alarm and signaling systems shall be to ensure system operation in accordance with the design documents.

A.14.2.1.2 If a system is designed to meet a specific mission or set of goals, then operational testing will assure that the system has mission reliability. For example, during acceptance testing, the design ambient noise level might not be present. Authorities having jurisdiction and technicians should not be trying to achieve the +5/15 dB or +5/10 dB requirements at acceptance, as they might not know what the maximum average or peak noise levels are. They need only measure the system and determine if it meets the required design level. Therefore, the design level needs to be documented and communicated to them.

Acceptance and re-acceptance testing includes proper operation, and non-operation, of the fire alarm or signaling system's ability to properly interface to other systems. The best way to ensure a proper interface operation is to observe the actual operation of the interfaced system. However, exercising an emergency control function every time a related initiating device is actuated might not be desirable or practical, or in some cases may not even be permitted. *NFPA 72* permits testing of the fire alarm or signaling system up to the end point connection to the interfaced system or emergency control function. Refer to A.14.4.3.2 Table 14.4.3.2 Item 24.

14.2.1.3* The purpose for periodic inspections shall be to assure that obvious damages or changes that might affect the system operability are visually identified.

Periodic inspections uncover conditions affecting operation of the alarm system. This might include physical damage to system components, changes in environmental conditions, or changes in the physical layout of the building or space. For example, reconfiguration of the ceiling shown in Exhibit 14.2 resulted in the audible notification appliances being located above the drop ceiling, potentially affecting the sound pressure levels achieved in the space during an alarm condition.

A.14.2.1.3 Visual inspections contribute to the assurance of operational and mission reliability but do not ensure either.

14.2.1.4* The purpose for periodic testing shall be to statistically assure operational reliability.

Periodic inspection and testing do not necessarily ensure proper system operation or availability other than at the specific point in time of the inspection or test. The purpose of periodic inspections and tests is to minimize the potential time a system, function, or device might be out of service before discovery of the problem. For example, assume that during renovation work a smoke detector in the project area is covered with a plastic bag to prevent the entry of dust and dirt but is not removed at the conclusion of the project. If the facility inspects its smoke detectors annually, and the plastic bag was placed over the detector the day after the inspection, the detector could potentially be impaired for a year. If the inspection period is semiannual, as required by *NFPA 72*, the potential out-of-service time is reduced to 6 months. If the facility has a superior inspection program requiring all smoke detectors to be inspected each month, the maximum out-of-service time before discovery of the plastic bag would be 1 month.

A.14.2.1.4 Periodic testing of fire alarm and signaling systems is not necessarily done as a complete system test. *NFPA 72* requires parts of the systems to be tested at different frequencies. At any one particular test, only a fraction of the system can be tested. Periodic testing contributes to the assurance of operational and mission reliability but does not ensure either.

Periodic testing of the interface between a fire alarm or signaling system in some other system or emergency control function is permitted by *NFPA 72* to be performed without actually operating the interfaced system or function. Refer to A.14.4.3.2 Table 14.4.3.2 Item 24.

EXHIBIT 14.2

Audible Notification Appliance Above Reconfigured Ceiling. (Courtesy of Jeffrey Moore, P.E., JENSEN HUGHES)

The inspection, testing, and maintenance requirements address only the functions and features of the fire alarm or signaling system even if the system is connected to, monitors, or controls other building systems. The inspection and testing of other fire protection and life safety features or systems, such as fire doors, dampers, suppression systems, or smoke control systems are covered by the standard that applies to the specific system or feature. While integrated testing of the fire alarm or signaling system and connected systems is preferred to confirm actual system response under "fire" conditions, it is not required by *NFPA 72*.

14.2.2 Performance.

14.2.2.1 Performance Verification. To ensure operational integrity, the system shall have an inspection, testing, and maintenance program.

FM

14.2.2.1.1 Inspection, testing, and maintenance programs shall satisfy the requirements of this Code and conform to the equipment manufacturer's published instructions.

Subsection 14.2.2 reinforces the requirements in most fire codes for system testing. Paragraph 14.2.2.1.1 incorporates the "manufacturer's published instructions" into the Code requirements. Manufacturers are required to submit manufacturer's published instructions to the organization conducting product evaluations for the listing of their system or component. The listing organization reviews these instructions, including the manufacturer's inspection, testing, and maintenance instructions, as part of the evaluation during the listing process. These instructions are part of the listing for the product and should be enforced as requirements in accordance with 10.3.2 and 14.2.2.1.1. Verifying the correct operation of the system includes conformance with the Code, with the operational goals of the owner, and with the specifications of the designer. These goals and specifications should be included with the system design documentation. Refer to 14.2.5 and Sections 7.3 and 23.3.

The Code is currently revised on a three-year cycle, but new product development or a refinement of an existing product may occur much faster. In the event of a conflict between the Code requirements and the manufacturer's published instructions, the manufacturer's requirements should prevail. This, however, is ultimately a decision for the authority having jurisdiction.

System Design Tip

14.2.2.1.2* Inspection, testing, and maintenance programs shall verify correct operation of the system.

N **A.14.2.2.1.2** Testing should be performed in such a way that testing personnel can promptly respond to signals as they are initiated during testing and can ensure that devices are reporting with the correct locations and addresses, programming errors are not overlooked, ground faults are acknowledged promptly, and fire and trouble/supervisory signals are responded to immediately when signals are not related to the testing taking place.

Testing personnel need to confirm that not only are signals received at the control unit but that they are the correct signals. For larger systems, this could require one technician to remain at the control unit and communicate with other technicians in the field to confirm correct signal receipt. The test plan required by 14.2.10 should detail how a correct test signal receipt is to be confirmed, the number of personnel required for testing, and procedures to immediately handle other alarm, supervisory, or trouble signals received from areas where testing is not in progress.

14.2.2.2 Impairments/Deficiencies.

14.2.2.2.1 The requirements of Section 10.21 shall be applicable when a system is impaired.

14.2.2.2.2 System deficiencies shall be corrected.

FM

The inspection and testing procedures should discover problems and deficiencies and, more importantly, ensure that they are corrected. Exhibit 14.3 shows an installation with a missing detector and the conductors twisted together to prevent a constant trouble signal. This condition was noted on multiple inspection and test reports, but there was no follow-up by the owner or authority having jurisdiction to confirm correction of the problem and restoration of the detector.

14.2.2.2.3 If a deficiency is not corrected at the conclusion of system inspection, testing, or maintenance, the system owner or the owner's designated representative shall be informed of the deficiency writing within 24 hours.

EXHIBIT 14.3

Installation with Missing Detector. (Courtesy of Jeffrey Moore, P.E., JENSEN HUGHES)

The owner or owner's designated representative needs to know about defects or problems discovered as part of the inspection and testing process so that action can be initiated to correct or repair the problem or defect. Some problems or defects may be corrected during the course of an inspection or test. For example, a technician discovering a detector covered by tape or a manual fire alarm box obstructed by furniture could easily correct the problem by removing the tape or moving the furniture. Even if corrected, the problems should still be reported to the building owner or owner's designated representative to prevent a recurrence. If during the testing of a waterflow switch the technician discovers that it is not working, the owner or owner's designated representative should be notified immediately so that action can be initiated to repair the switch. In many cases, the initial notification to the owner will likely be verbal, but all such notifications are also required to be made in writing. Section 10.21 also covers administrative requirements for handling of all system impairments, including out-of-service events.

14.2.2.2.4 In the event that any equipment is observed to be part of a recall program, the system owner or the system owner's designated representative shall be notified in writing.

While the reliability of modern, listed fire alarm and signaling equipment is very high, occasionally a problem is discovered after manufacture that could affect performance or reliability in the field. In some cases, the manufacturer may voluntarily issue a recall notice. If the problem poses a more serious threat, a government agency may require issuance of a recall notice. In situations where the individual conducting the system inspection recognizes that a particular device, appliance, or piece of equipment is part of a recall program, written notification to the building owner is required so corrective action can begin. This paragraph is not intended to require inspection personnel to be able to recognize and identify all devices or equipment potentially involved in a recall program, only that they notify the owner if they recognize equipment involved in a recall.

14.2.3 Responsibilities.

14.2.3.1* The property or building or system owner or the owner's designated representative shall be responsible for inspection, testing, and maintenance of the system and for alterations or additions to this system.

A.14.2.3.1 See definition of *Ownership* in 3.3.195.

The property owner, building owner, system owner, or owner's designated representative is responsible for the inspection, testing, and maintenance requirements for the systems. The owner may designate a representative to assume this responsibility, but it must be in writing, such as through a service contract.

This requirement does not necessarily mean that the owner or the designated representative can legally perform any of the testing or maintenance of the system, which depends on the licensing laws of the applicable state or local jurisdiction. This requirement means that the owner or the owner's

designated representative is responsible for ensuring the system is tested properly and maintained in accordance with the requirements of this chapter.

The owner relationships are further explained in the context of system inspection, testing, and maintenance in A.3.3.195.

14.2.3.2 Where the property owner is not the occupant, the property owner shall be permitted to delegate the authority and responsibility for inspecting, testing, and maintaining the fire protection systems to the occupant, management firm, or managing individual through specific provisions in the lease, written use agreement, or management contract.

In accordance with 14.2.3.1, the property, building, or system owner, or the owner's designated representative is responsible for ensuring inspecting, testing, and maintenance of the system. Most building owners do not have the trained personnel required to complete these tasks. Delegation of this responsibility may be to a management firm, tenant, or other individual or organization. This delegation must be in writing, such as a formal agreement between the parties involved. For a leased or rented building, the delegation may be included as part of the lease or rental agreement.

14.2.3.3 Inspection, testing, or maintenance shall be permitted to be done by the building or system owner or a person or organization other than the building or system owner if conducted under a written contract.

FM

If the owner or designated representative chooses not to perform the required system inspection, testing, and maintenance or is not permitted to perform these tasks due to local licensing laws, the owner is permitted to contract with a qualified contractor or service organization to perform these services. This written delegation may take the form of a testing and maintenance contract, formal statement of work, purchase agreement, or other means to make it clear that the tasks are being delegated.

The inspection, testing, and maintenance program for a fire alarm or signaling system is not an all-or-none situation. It is possible that the building or system owner has personnel who are qualified to conduct the required visual inspections but are not qualified to perform the required testing and maintenance. The owner may elect to conduct the inspections in-house and contract the system testing and maintenance to a qualified service organization. Separate and specific qualification requirements for personnel conducting inspections, personnel conducting testing, and personnel performing maintenance are in 10.5.3.

14.2.3.4 Where the building or system owner has delegated any responsibilities for inspection, testing, or maintenance, a copy of the written delegation required by 14.2.3.3 shall be provided to the authority having jurisdiction upon request.

It is not sufficient for a building or system owner to express verbally that the responsibility for system inspection, testing, and maintenance has been delegated to another party. The delegation of this responsibility must be in writing, and a copy must be furnished to the authority having jurisdiction, if requested. Clearly delineating who is responsible for each required task in the inspection, testing, and maintenance of a system is important to ensure that all required inspection, testing, and maintenance tasks are completed.

14.2.3.5 Testing and maintenance of central station service systems shall be performed under the contractual arrangements specified in 26.3.3.

FM

This clarifies that a contractual agreement per 26.3.3 is required to provide the services for testing of central station alarm systems. Only a listed central station or listed alarm service local company (see 3.3.209 for the term *prime contractor*) can be contracted to perform the testing and maintenance

requirements for central station alarm systems. Keep in mind that not all alarm systems that transmit signals to a central station are central station alarm systems. Central station alarm systems and central station alarm service have very specific requirements and, in practice, only a very small percentage of systems monitored by a central station are actually central station alarm systems. See Section 26.3 for the specific requirements for central station alarm service.

14.2.3.6* Service Personnel Qualifications and Experience. Service personnel shall be qualified and experienced in accordance with the requirements of 10.5.3.

A.14.2.3.6 Service personnel should be able to do the following:

(1) Understand the requirements contained in *NFPA 72* and the fire alarm requirements contained in *NFPA 70*
(2) Understand basic job site safety laws and requirements
(3) Apply troubleshooting techniques, and determine the cause of fire alarm system trouble conditions
(4) Understand equipment specific requirements, such as programming, application, and compatibility
(5) Read and interpret fire alarm system design documentation and manufacturer's inspection, testing, and maintenance guidelines
(6) Properly use tools and test equipment required for testing and maintenance of fire alarm systems and their components
(7) Properly apply the test methods required by *NFPA 72*

FAQ What is the purpose of the requirements in 14.2.3.6?

The Code recognizes that the training, experience, and capabilities of service personnel may vary widely, and an individual conducting an inspection of a small alarm system does not necessarily require the same level of training and experience as a technician testing a large, complex detection and alarm system. As a result, the qualifications of service personnel have been divided into categories based on the type and level of service they provide: inspection, testing, service (maintenance), or programming. Subsection 10.5.3 details the required qualifications for each category. Personnel may meet the required qualifications individually or through their affiliation with a service organization registered, licensed, certified, or recognized by the authority having jurisdiction.

14.2.4* Notification.

A.14.2.4 Prior to any scheduled inspection or testing, the service company should consult with the building or system owner or the owner's designated representative. Issues of advance notification in certain occupancies, including advance notification time, building posting, systems interruption and restoration, evacuation procedures, accommodation for evacuees, and other related issues, should be agreed upon by all parties prior to any inspection or testing.

Issues that could arise during testing are best dealt with before testing. For example, after notifying building occupants that testing will be underway and to ignore the fire alarm, how are the building occupants to be notified of an actual alarm? The test plan required by 14.2.10 should include these potential issues and how they will be handled during testing.

14.2.4.1 Before proceeding with any testing, all persons and facilities receiving alarm, supervisory, or trouble signals and all building occupants shall be notified of the testing to prevent unnecessary response.

FAQ

Who should be notified before testing a fire alarm system?

Before fire alarm or signaling system tests begin, everyone potentially affected by the testing is required to be notified. This includes the building occupants, the building owner or building manager, switchboard operators, building engineer, building or floor fire wardens, building maintenance personnel, fire department, supervising station receiving signals, or any other individual or organizations affected by the testing. In many cases, the building owner or the owner's designated representative (e.g., a property management company) knows the location of all the building occupants, building employees, or tenant occupants and the best means of informing them of the testing. Typically, the building owner or the owner's designated representative has the resources and authority to use broadcast email, use the building's public address system, distribute flyers, and display signage to inform occupants of the testing. Notification of building occupants and other organizations affected by the testing should be coordinated with the building or system owner and explained in the test plan required by 14.2.10. The notification should include information on what testing is being conducted, the locations, and the expected duration.

Notification of personnel at the supervising station or fire alarm communications center is required for systems that transmit signals to a supervising station or directly to the fire department. For central station alarm systems, 26.3.8.3.5.5 and 26.3.8.3.5.6 require service personnel or the alarm system owner to provide a unique identification code to the central station before they place a central station alarm system into test status. The requirements of 26.3.8.3.5.6 are to prevent unauthorized personnel from placing the system in test mode, where the signals will not initiate automatic response from the fire department. Note that some local fire codes require notification of the fire department before testing, regardless of whether the fire alarm system automatically transmits signals to the fire department.

Working with the building or system owner, service personnel can use the test plan required by 14.2.10 to explain the means of notification before testing. The test plan can also detail the procedures to be used to sound the alarm if an actual emergency occurs during testing. The means of notifying building occupants of an actual emergency during testing might be by voice announcement, bullhorns, floor fire wardens and runners, telephone, or other suitable means.

Note that fire drills are not part of fire alarm system testing and are not addressed by the Code. Requirements for fire drills are usually specified as a part of the applicable fire code.

14.2.4.2 At the conclusion of testing, those previously notified (and others, as necessary) shall be notified that testing has been concluded.

14.2.4.3 The owner or the owner's designated representative and service personnel shall coordinate system testing to prevent interruption of critical building systems or equipment.

If the system is interconnected with other systems providing building services such as elevators, HVAC systems, or smoke control, the signaling system testing must be conducted in a manner that does not disrupt building systems or equipment that may be critical to the continuity of building operations. Testing interfaced equipment and emergency control functions is addressed in 14.2.7 and Table 14.4.3.2.

In general, the requirements of Chapter 14 cover testing the fire alarm or signaling system up to the point of interface with other systems, but they do not cover testing the system monitored or controlled by the fire alarm or signaling system. For example, if a fire or smoke damper, as shown in Exhibit 14.4, is controlled by a smoke detector connected to the fire alarm system, the requirements of Chapter 14 cover inspection, testing, and maintenance of the smoke detector but do not require an operational test of the damper. Each system or piece of equipment interfaced with the fire alarm system is tested in accordance with the applicable code or standard for that system or equipment. In this example, the damper would be inspected and tested in accordance with the requirements of NFPA 80, *Standard for Fire Doors and Other Opening Protectives*.

EXHIBIT 14.4

Fire/Smoke Damper Installation. (Courtesy of Jeffrey Moore, P.E., JENSEN HUGHES)

14.2.5 System Documentation. Prior to system maintenance or testing, the record of completion and any information required by Chapter 7 regarding the system and system alterations, including specifications, wiring diagrams, and floor plans, shall be provided by the owner or a designated representative to the service personnel upon request.

At the time of an acceptance test, the authority having jurisdiction and the system contractor must ensure that all documentation for the system installation has been completed and is presented to the owner or the owner's designated representative. The documentation that includes record or "as-built" drawings, acceptance test reports, record of completion, and system operations and maintenance manuals must be provided in a usable format. See Chapter 7 for a complete description of required documentation. The system documents that describe the arrangement of the system, the location of each device or appliance, and the sequence of operations must be available to the person or organization responsible for ongoing system inspection, testing, and maintenance. This information is needed to develop the test plan required by 14.2.10.

An effective records management system is necessary for the owner to maintain system records for the life of the system. The owner is required to provide up-to-date information pertaining to the system, including system alterations, specifications, wiring diagrams, and revisions to system software to service personnel when requested. Requirements for record retention and maintenance can be found in Section 7.7, including a requirement for storage in a documentation cabinet.

14.2.5.1 The provided documentation shall include the current revisions of all fire alarm software and the revisions of software of any systems with which the fire alarm software interfaces.

14.2.5.2 The revisions of fire alarm software, and the revisions of the software in the systems with which the fire alarm software interfaces, shall be verified for compatibility in accordance with the requirements of 23.2.2.1.1.

The compatibility of software used in control units must be verified. The system documentation required by 14.2.5 includes information on the current software version or revision for all control units used in a system. Paragraph A.23.2.2.1.1 includes a detailed discussion of potential compatibility issues. See 3.3.279 for the definition of the term *software* and 23.2.2 for additional requirements on software and firmware documentation.

14.2.6 Releasing Systems. Requirements pertinent to testing the fire alarm systems initiating fire suppression system releasing functions shall be covered by 14.2.6.1 through 14.2.6.6.

Subsection 14.2.6 addresses the special requirements and precautions that apply to fire alarm systems arranged to actuate a suppression system. Requirements for testing the fire suppression system are covered by separate standards that address the specific suppression system. Testing of special hazard fire protection systems controlled by a control unit dedicated to the suppression system should be conducted separately from the building fire alarm system. In most cases, the fire suppression system is simply treated as a single device or point monitored by the building fire alarm system. Only the interface functions between the dedicated control unit and the building fire alarm system need to be tested as part of the building fire alarm system testing. Fire detectors installed to actuate the fire suppression system and connected to the fire suppression system control unit should be tested as part of the tests conducted on the fire suppression system.

Most suppression system standards refer to *NFPA 72* for the testing requirements of the fire detection, alarm, and control portions of the suppression system, but the testing can be conducted separately from the building fire alarm system. In some cases, the frequency of testing for the fire suppression system may be greater than specified by *NFPA 72* for fire detection systems. In such cases, the requirements of the fire suppression system standard should be followed. Conversely, if the testing frequency

for the fire detection system components is greater than that for the fire suppression system, a test plan will need to be developed to accommodate and comply with both sets of requirements.

If the building fire alarm control unit is listed for releasing service and directly controls the fire suppression system, operation of the fire suppression system must be tested as part of the building fire alarm system testing. Obviously, operation of the suppression system must be simulated unless the purpose is to discharge the system. It is important that the special hazard system not be inadvertently actuated. Also refer to the requirements of 23.3.3, 23.8.2, 23.8.5.10, and Section 23.11.

14.2.6.1 Testing personnel shall be qualified and experienced in the specific arrangement and operation of a suppression system(s) and a releasing function(s) and shall be cognizant of the hazards associated with inadvertent system discharge.

Only technicians and service personnel who are qualified to test and service the fire suppression system should be permitted to conduct testing of fire alarm systems controlling fire suppression systems. Service personnel unfamiliar with the arrangement and operation of the fire suppression system could cause accidental discharge of the system or, in some cases, impairment of the system. An unintentional actuation of the fire suppression system could cause extensive property damage, disruption of critical operations, and, in extreme cases, injury or death of occupants in the area protected by the fire suppression system. Exhibit 14.5 illustrates a high-expansion foam fire suppression system in operation. These systems should be tested in accordance with NFPA 11, *Standard for Low-, Medium-, and High-Expansion Foam*.

14.2.6.2 Occupant notification shall be required whenever a fire alarm system configured for releasing service is being serviced or tested.

The required notification allows the occupants to take appropriate precautions to protect themselves or prepare for possible interruption of their work resulting from the testing. For example, personnel working in an area where actuation of a suppression system could pose a safety hazard should be evacuated from the area before the start of testing. Testing may also result in shutdown of critical systems, such as ventilation or operating power, if the suppression system actuates. In extreme cases, incidents of accidental operation of fire suppression systems have resulted in the death of occupants or service personnel. The means of dealing with systems interfaced with suppression systems should be clearly detailed in the test plan required by 14.2.10. Also see 14.2.4.

EXHIBIT 14.5

High-Expansion Foam Fire Suppression System. (Courtesy of Jeffrey Moore, P.E., JENSEN HUGHES)

14.2.6.3 Discharge testing of suppression systems shall not be required by this Code.

Requirements for actual discharge testing of fire suppression systems are in the code or standard specific to the fire suppression system. This paragraph reinforces that Chapter 14 does not require actuation of any fire suppression system as part of fire alarm system testing.

14.2.6.4 Suppression systems shall be secured from inadvertent actuation, including disconnection of releasing solenoids or electric actuators, closing of valves, other actions, or combinations thereof, for the specific system, for the duration of the fire alarm system testing.

Fire alarm systems used for releasing service are recommended to be identified as such. A typical suppression release panel identification label could include information such as the following:

> "SUPPRESSION SYSTEM CONTROL UNIT.
> CAUTION: This control unit initiates discharge of a fire suppression system. Improper service or test procedures may result in system discharge. Disable all discharge circuits prior to servicing."

One way to secure or disable a suppression system from inadvertent actuation during fire alarm system testing is operation of a key-operated service disconnect switch (see Exhibit 23.13) that physically disconnects the suppression releasing mechanism (i.e., solenoid or electronic actuator) from the suppression releasing circuit. The Code does not permit the use of a software interlock. See 23.11.5.2.

Disconnection of releasing solenoids or electronic actuators, closing of valves, or other actions taken to secure or disable a suppression system from inadvertent actuation during fire alarm system testing must initiate an off-normal or supervisory signal on the associated fire alarm system control unit. The supervisory signal is required to remain active on the fire alarm system control unit until the device that has been secured or disabled is placed back in service — that is, returned to its normal operating condition. See 23.11.5.1.

Disabling or impairing any fire protection system features or functions requires the implementation of proper impairment handling procedures. This might include notification of critical personnel before system shutdown, elimination of hazardous operations in the area(s) where the fire suppression system is impaired, and the provision of temporary protection measures. See the impairment handling procedures required by Section 10.21.

14.2.6.5 Testing shall include verification that the releasing circuits and components energized or actuated by the fire alarm system are electrically monitored for integrity and operate as intended on alarm.

14.2.6.6 Suppression systems and releasing components shall be returned to their functional operating condition upon completion of system testing.

14.2.7 Interface Equipment and Emergency Control Functions.

FAQ

Does 14.2.7 require that HVAC systems and fire dampers controlled by the fire alarm system be tested as part of the fire alarm system test?

The scope of the testing requirements in Chapter 14 ends at the interface with the equipment or device providing the emergency control function. For example, Chapter 14 dictates the requirements of testing the smoke detector that controls closure of the fire damper, but testing of the damper to ensure closure is not required by *NFPA 72*. Chapter 14 requires testing of the smoke detector and confirmation that the appropriate output signal is initiated to close the damper. Closure of the damper would be tested in accordance with the requirements of NFPA 80.

While the scope of Chapter 14 does not extend beyond the fire alarm or signaling system, the building fire alarm system is, in practice, used to monitor and control the operation of many other fire protection and life safety systems that must be carefully integrated to achieve the expected level of protection and performance. It is difficult to ensure that systems are interfaced properly with the fire alarm system without an end-to-end test. For example, Chapter 14 requires the smoke detector initiating elevator recall to be tested for this function. Actuating the detector and determining that the appropriate output signal to the elevator system is initiated are actions that meet the requirements of Chapter 14. There is no requirement in the Code to recall the elevator as part of the fire alarm system testing, but such testing is not prohibited and is good practice. This subsection, along with the requirements in Table 14.4.3.2, Items 20 and 24, emphasize that testing interfaced equipment and emergency control functions should not be overlooked.

Proper testing of interfaced systems and emergency control functions may require the involvement of personnel not typically associated with testing fire alarm systems. One of the reasons for 14.2.10 requiring the development of a test plan is to clarify what will be tested and what will not be tested. For example, a building owner or authority having jurisdiction reviewing a test report that indicates that the elevator lobby smoke detectors were tested may be left with the impression that the elevator recall functions were fully tested as well. The test plan should make clear whether only the smoke detectors are to be tested or whether a representative will be present to fully test the required elevator functions as well. Consult NFPA 4, *Standard for Integrated Fire Protection and Life Safety System Testing*, for additional information on the protocols to be followed for verification of appropriate operation of interconnected fire protection and life safety systems.

14.2.7.1* Testing personnel shall be qualified and experienced in the arrangement and operation of interface equipment and emergency control functions.

A.14.2.7.1 As an example, testing of the elevator fire service and shutdown functions will usually require a coordinated multi-discipline effort with presence of qualified service personnel for the fire alarm system, the elevator system, and other building systems. The presence of inspection authorities might also be needed in some jurisdictions. The development of a test plan should be considered to ensure that the testing of these features is accomplished in a coordinated and timely manner. This plan should also ensure that all appropriate parties and personnel are present when needed, and that the testing requirements for both the fire alarm system and the elevator system are fulfilled. See Section 21.3 and Section 21.4 for specific elevator emergency control functions.

See NFPA 4 where it is desired or required by other applicable codes and standards to conduct an end-to-end test of the building fire alarm system and other fire protection and life safety systems.

14.2.7.2 Testing shall be accomplished in accordance with Table 14.4.3.2.

14.2.8 Automated Testing.

Automated testing of fire alarm system components is permitted if the arrangement provides a means that is equivalent to the methods specified in Table 14.4.3.2. For example, many fire alarm systems are capable of testing smoke detector sensitivity automatically from the control unit. Listed assemblies that incorporate a waterflow switch and a solenoid-operated bypass line arranged to flow water past the waterflow switch to test it, as required by Chapter 14, are also available, as illustrated in Exhibit 14.6. The testing operation could be arranged to actuate automatically or remotely from the fire alarm control unit. Failure of the device equipped with an automatic test must result in an audible and visual trouble signal as required by 14.2.8.2.

EXHIBIT 14.6

Waterflow Test Arrangement. (Courtesy of Global Vision, Inc., Osseo, MN)

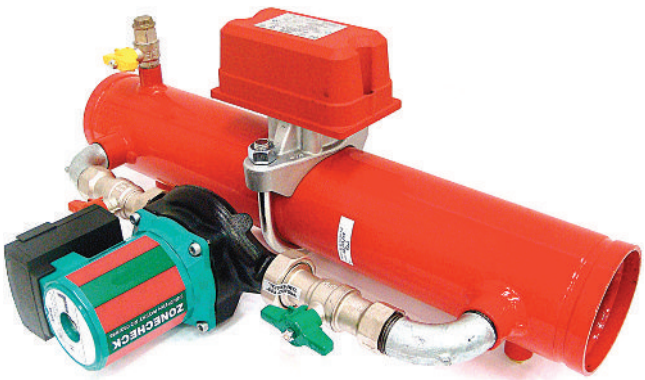

14.2.8.1 Automated testing arrangements that provide equivalent means of testing devices to those specified in Table 14.4.3.2 at a frequency at least equivalent to those specified in Table 14.4.3.2 shall be permitted to be used to comply with the requirements of this chapter.

14.2.8.2 Failure of a device on an automated test shall result in an audible and visual trouble signal.

14.2.9* Performance-Based Inspection and Testing. As an alternate means of compliance, subject to the authority having jurisdiction, components and systems shall be permitted to be inspected and tested under a performance-based program.

A.14.2.9 This section provides the option to adopt a performance-based inspection and testing method as an alternate means of compliance for Sections 14.3 and 14.4. The prescriptive test and requirements contained in this Code are essentially qualitative. Equivalent or superior levels of performance can be demonstrated through quantitative performance-based analyses. This section provides a basis for implementing and monitoring a performance-based program acceptable under this option (provided that approval is obtained by the authority having jurisdiction). The concept of a performance-based inspection and testing program is to establish the requirements and frequencies at which inspection and testing must be performed to demonstrate an acceptable level of operational reliability. The goal is to balance the inspection and testing frequency with proven reliability of the system or component. The goal of a performance-based inspection program is also to adjust inspection and testing frequencies commensurate with historical documented equipment performance and desired reliability. Frequencies of inspection and testing under a performance-based program might be extended or reduced from the prescriptive inspection and testing requirements contained in this Code when continued inspection and testing has been documented indicating a higher or lower degree of reliability as compared to the authority having jurisdiction's expectations of performance. Additional program attributes should be considered when adjusting inspection and testing.

A fundamental requirement of a performance-based program is the continual monitoring of fire system/component failure rates and determining if they exceed the maximum allowable failure rates as agreed upon with the authority having jurisdiction. The process used to complete this review should be documented and be repeatable. Coupled with this ongoing review is a requirement for a formalized method of increasing or decreasing the frequency of inspection and testing when systems exhibit either a higher than expected failure rate or an increase in reliability as a result of a decrease in failures. A formal process for reviewing the failure rates and increasing or decreasing the frequency of inspection and testing must be

well documented. Concurrence from the authority having jurisdiction on the process used to determine test frequencies should be obtained in advance of any alterations to the inspection and testing program. The frequency required for future inspections and tests might be reduced to the next inspection frequency and maintained there for a period equaling the initial data review or until the ongoing review indicates that the failure rate is no longer being exceeded — for example, going from an annual to a semiannual testing when the failure rate exceeds the authority having jurisdiction's expectations, or from annual to every 18 months when the failure trend indicates an increase in reliability.

See also NFPA 551 for additional guidance.

Alternatives to the prescriptive methods and frequencies for testing system components are permitted contingent on approval by the authority having jurisdiction. Under such a program, adjustment of the inspection and testing frequencies may be possible using a qualitative performance-based analysis that demonstrates provision of an acceptable level of reliability. Such a program would typically be based on data that describe the failure rate of the system components. Knowing the failure rate and mean time between failures (MTBF) permits an analysis of the testing frequencies that, based on the failure data, may permit a reduction. It might also indicate that the prevailing conditions warrant an increase in the testing frequency.

To review a performance-based testing program, the authority having jurisdiction must have an understanding of the statistical basis of the program. For example, an authority having jurisdiction may determine there is no acceptable rate of failure. While this goal is admirable, it is not realistic. All systems and system components have some measurable rate of failure. Even strict compliance with the prescriptive testing requirements of Chapter 14 does not ensure a zero failure rate. The routine testing simply provides a means of identifying failure of a system or component.

Adoption of a performance-based inspection and testing program would require continual monitoring of system/component failure rates. The collected data may indicate that certain frequencies may be extended further, while frequencies of other components may need to be reduced. The *SFPE Handbook of Fire Protection Engineering* provides additional information on the statistical methods used to evaluate reliability. The guidance in NFPA 551, *Guide for the Evaluation of Fire Risk Assessments*, may also be helpful in assessing the adequacy of a performance-based program.

14.2.10* Test Plan.

Without complete system documentation from the system owner, it will be difficult for the service provider to identify the location of all system components, features, and functions for inclusion in the test plan. Components not readily visible or clearly identified in some manner could be overlooked when service personnel develop the test plan. For example, the under-floor smoke detector shown in Exhibit 14.7 could be overlooked easily without drawings showing the location of each system device and appliance.

Δ **A.14.2.10** The test plan is intended to clarify exactly what is to be tested and how it is to be tested. Testing of fire alarm and signaling systems is often done in a segmented fashion to accommodate the availability of testing or other personnel or to minimize the interruption of building operations. Where a building owner has contracted the performance of inspection, testing, and maintenance activities to outside entities, the test plan, what will and will not be tested, should be reviewed by those parties. Building operations can be affected by testing of the fire alarm or signaling system itself and by the operation of emergency control functions actuated by the fire alarm or signaling system. The boundary of the fire alarm or signaling system extends up to and includes the emergency control function interface device. The testing requirements prescribed in *NFPA 72* for fire alarm and signaling systems end at the emergency control function interface device. The purpose of the test plan is to document what devices will and will not actually be tested.

EXHIBIT 14.7

Under-Floor Smoke Detector. (Courtesy of Jeffrey Moore, P.E., JENSEN HUGHES)

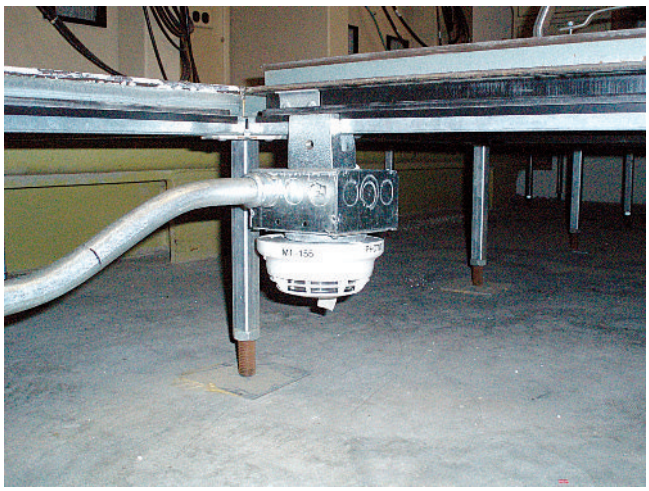

The testing of emergency control functions, releasing systems, or interfaced equipment is outside the scope of *NFPA 72*. Requirements for testing other systems are found in other governing laws, codes, or standards. Requirements for integrated testing of combined systems also fall under the authority of other governing laws, codes, standards, or authority having jurisdiction. NFPA 3 provides guidance for such testing. NFPA 3 recognizes the importance of the development of an integrated testing plan.

Further information on testing associated with emergency control functions can be found in Table 14.4.3.2, Item 24 and its related annex material in A.14.4.3.2.

FM

14.2.10.1 A test plan shall be developed to clearly establish the scope of the testing for the fire alarm or signaling system.

The detail and complexity of the written test plan will vary with the size and complexity of the building and the fire alarm or signaling system. The plan for a small, uncomplicated building with few, if any, interfaced systems could consist of a single page that explains how the building's manual fire alarm boxes, smoke detectors, and notification appliances are to be tested after business hours. The test plan for a large, complicated facility with many different types of interfaced systems, such as HVAC systems, elevators, smoke control, sprinklers, fire pumps, special fire suppression systems, and emergency communications capabilities, would be more detailed and complex. This test plan document might explain how the testing is to be phased, the other trades required for interfaced systems, methods of simulating operation of specific equipment, and detailed procedures for response to an actual alarm or event if one occurs during testing.

14.2.10.2 The test plan and results shall be documented with the testing records.

A copy of the written test plan should be retained with the inspection and testing records so that the methods used during previous tests can be confirmed. A copy of the test plan filed with the test results would identify what was tested, by whom it was tested, and clarify what was not tested. For example, the test report might identify elevator lobby smoke detectors tested by a contractor. Someone reviewing this information might draw the inappropriate conclusion that elevator recall functions had been tested. The test plan should identify whether testing is an actual end-to-end test of this function or whether only the detector and system output to initiate the recall function were tested without actually recalling the elevator.

14.3 Inspection.

Δ **14.3.1*** Unless otherwise permitted by 14.3.2, visual inspections shall be performed in accordance with the schedules in Table 14.3.1 or more often if required by the authority having jurisdiction.

Table 14.3.1 specifies the minimum frequencies and methods for visual inspection of various system components. Where building conditions change more rapidly than normal and these changes are likely to affect the performance of the system, the authority having jurisdiction may require more frequent visual inspections. In general, visual inspections must ensure the component is not damaged or obstructed, that environmental conditions are suitable for continued operation of the component, and that other specific items are confirmed by visual examination.

A visual inspection should be conducted before any testing. Copies of the record drawings (as-builts) and system documentation such as the record of completion provide the quantities and locations of system components. Improperly installed, damaged, or nonfunctional components should be identified during the visual examination and repaired or corrected before tests begin.

Table 14.3.1 starts on the next page. Note that the table continues on the left-hand pages that follow; the commentary that corresponds with the table appears on the right-hand pages.

Δ ***TABLE 14.3.1*** *Visual Inspection*

	Component	*Initial Acceptance*	*Periodic Frequency*	*Method*	*Reference*
1.	All equipment	X	Annual	Ensure there are no changes that affect equipment performance. Inspect for building modifications, occupancy changes, changes in environmental conditions, device location, physical obstructions, device orientation, physical damage, and degree of cleanliness.	14.3.4
2.	Control equipment:				
	(1) Fire alarm systems monitored for alarm, supervisory, and trouble signals			Verify a system normal condition.	
	(a) Fuses	X	Annual		
	(b) Interfaced equipment	X	Annual		
	(c) Lamps and LEDs	X	Annual		
	(d) Primary (main) power supply	X	Annual		
	(e) Trouble signals	X	Semiannual		
	(2) Fire alarm systems unmonitored for alarm, supervisory, and trouble signals			Verify a system normal condition.	
	(a) Fuses	X	Weekly		
	(b) Interfaced equipment	X	Weekly		
	(c) Lamps and LEDs	X	Weekly		
	(d) Primary (main) power supply	X	Weekly		
	(e) Trouble signals	X	Weekly		
3.	Reserved				
4.	Supervising station alarm systems — transmitters			Verify location, physical condition, and a system normal condition.	
	(1) Digital alarm communicator transmitter (DACT)	X	Annual		
	(2) Digital alarm radio transmitter (DART)	X	Annual		
	(3) McCulloh	X	Annual		
	(4) Radio alarm transmitter (RAT)	X	Annual		
	(5) All other types of communicators	X	Annual		
5.	In-building fire emergency voice/alarm communications equipment	X	Semiannual	Verify location and condition.	
6.	Reserved				
7.	Reserved				
8.	Reserved				

(continues)

Table Commentary

2.

The term *monitored* in the component description for Item 2(1) refers to systems connected to a supervising station that receives all three signals — alarm, supervisory, and trouble. Unmonitored systems as described in Item 2(2) do not transmit signals to a supervising station, and immediate response to the signals to address a problem is not ensured. Therefore, weekly inspections of fuses, interfaced equipment, lamps, LEDs, primary (main) power supplies, and trouble signals are needed to minimize the time interval between occurrence of a fault or problem and discovery. The commentary below applies to Items 2(1) and 2(2).

Fuses should be inspected for appearance and condition, and proper installation should be verified. In some instances, it will be apparent from visual inspection whether a fuse is blown — that is, whether the internal element is still intact or the fuse has actual signs of damage or scorch marks. Fuses showing signs of damage should be replaced with a fuse of the appropriate type and size as specified by the control equipment manufacturer. Other fuses should be checked to ensure compliance with the published instructions from the manufacturer for size and type.

Interfaces with other equipment or systems, such as sprinklers, HVAC, or elevator systems, for control or monitoring should be visually inspected for status (i.e., the equipment is either in its normal operating status, or it has been disabled due to maintenance reasons). The connection between the equipment and the fire alarm system should be examined for the following: open junction box covers, incomplete wiring connections (removed from terminal blocks, disconnected/removed from wire nuts, etc.), and damaged or broken wiring or raceway leading to such connections.

Primary (main) power supplies must be visually inspected for physical conditions and abnormal conditions should be noted. For example, is a power supply producing an unusually loud noise or operating at an abnormally high temperature? Does it appear to have visual evidence of physical damage, such as corrosion, scorch marks, or dents? Wiring terminals should be checked for corrosion and other damage. Are circuits properly installed at terminals? Check LEDs or other visual indicators on the control unit for proper operation and whether they indicate the correct conditions. For example, is the green power LED illuminated, indicating proper operation of the primary power source?

Visually confirm that there are no alarm, supervisory, or trouble signals registered on the control unit and confirm proper operation of all lamps and LEDs. An examination of the control unit shown in Exhibit 14.8 reveals that it is in alarm, the alarm has been silenced, and at least one supervisory signal and one trouble signal are active.

EXHIBIT 14.8

Visual Inspection of Control Unit. (Courtesy of Jeffrey Moore, P.E., JENSEN HUGHES)

Δ ***TABLE 14.3.1*** *Continued*

	Component	*Initial Acceptance*	*Periodic Frequency*	*Method*	*Reference*
9.*	Batteries				10.6.10
	(1) Valve-regulated lead-acid (VRLA) batteries	X			
	(a) General	X	N/A	Ensure month and year of manufacture is marked in the month/year format on each battery cell/unit. Verify tightness of battery connections. Inspect terminals for corrosion, excessive container/cover distortion, cracks in cell/unit or leakage of electrolyte. Replace any battery cell/unit if corrosion, distortion, or leakage is observed.	
	(b) Marking	N/A	Semiannual	Verify marking of the month/year of manufacture on each battery cell/unit. Replace any cell/unit if alarm equipment manufacturer's replacement date has been exceeded.	
	(2) Primary (dry cell) other than those used in low-power radio (wireless) systems in accordance with Chapter 23	X	Semiannual	Verify marking of the month/year of manufacture. Replace if alarm equipment/battery manufacturer's replacement date has been exceeded. Replacement date not to exceed 12 months. Verify tightness of connections. Inspect for corrosion or leakage. Replace any battery cell/unit if corrosion or leakage is observed.	
10.	Reserved				
11.	Remote annunciators	X	Semiannual	Verify location and condition.	
12.	Notification appliance circuit power extenders	X	Annual	Verify proper fuse ratings, if any. Verify that lamps and LEDs indicate normal operating status of the equipment.	10.6
13.	Remote power supplies	X	Annual	Verify proper fuse ratings, if any. Verify that lamps and LEDs indicate normal operating status of the equipment.	10.6
14.	Transient suppressors	X	Semiannual	Verify location and condition.	
15.	Reserved				
16.	Fiber-optic cable connections	X	Annual	Verify location and condition.	

(continues)

Table Commentary

9.

Terminology has been updated to reflect the terminology used by battery manufacturers and IEEE. What is commonly called a lead acid battery is in fact a valve-regulated lead-acid (VRLA) battery. Batteries should be examined for corrosion, leakage, or other physical damage and for the security of connections. Exhibit 14.9 depicts batteries with corrosion and case swelling. Other obvious abnormal conditions are evidence of off-gassing or boil over, which indicate overcharging or a malfunction of the battery charger. All batteries installed since the 2007 edition of the Code must be marked with the month and year of manufacture, using the month/year format. If the batteries are not marked by the manufacturer, the installer must obtain the date and mark the battery. Check the date on the batteries to determine whether they are due for replacement in accordance with Table 14.4.3.2, Items 9(1)(b), 9(2), and the published instructions from the manufacturer. With most batteries having a suggested life span of about 3 years, it would be unusual to find an installed battery not marked with the date of manufacture.

EXHIBIT 14.9

Batteries with Corrosion and Case Swelling. (Courtesy of Norel Service Company, Inc., Waltham, MA)

11.

Visual inspection of a remote annunciator should ensure that obstructions such as plants, file cabinets, or other large objects are not placed in front of the annunciator and do not prevent access by responding fire fighters or other emergency personnel. Other conditions that might be apparent from a visual inspection include physical damage, tampering, or incorrect or unclear labels or other means of identification. Any problems detected by the visual inspection must be reported and corrected.

Δ ***TABLE 14.3.1*** *Continued*

Component	*Initial Acceptance*	*Periodic Frequency*	*Method*	*Reference*
17. Initiating devices			Verify location and condition (all devices).	
(1) Air sampling				
(a) General	X	Semiannual	Verify that in-line filters, if any, are clean.	17.7.3.6
(b) Sampling system piping and sampling ports	X	N/A	Verify that sampling system piping and fittings are installed properly, appear airtight, and are permanently fixed. Confirm that sampling pipe is conspicuously identified. Verify that sample ports or points are not obstructed.	17.7.3.6
(2) Duct detectors				
(a) General	X	Semiannual	Verify that detector is rigidly mounted. Confirm that no penetrations in a return air duct exist in the vicinity of the detector. Confirm the detector is installed so as to sample the airstream at the proper location in the duct.	17.7.5.5
(b) Sampling tube	X	Annual	Verify proper orientation. Confirm the sampling tube protrudes into the duct in accordance with system design.	17.7.5.5
(3) Electromechanical releasing devices	X	Semiannual		
(4) Fire extinguishing system(s) or suppression system(s) switches	X	Semiannual		
(5) Manual fire alarm boxes	X	Semiannual		

(continues)

Table Commentary

17(2)(b).

Duct smoke detectors, including sampling tubes, should be inspected to ensure that there are no obstructions to smoke entry into the sensing chamber. The detector and the sampling tubes should be clear and the ports unobstructed by dust, dirt, or debris. The orientation of the sampling tubes should also be examined and compared with the instructions provided by the manufacturer. Depending on the method of installation, the sampling tubes may or may not be visible for examination in an existing system.

17(3).

Electromechanical releases use a combination of electrical and mechanical energy to initiate an action. For example, a suppression system may use an electromagnet to impart a mechanical force on a component that causes release of extinguishing agent. Some dry chemical fire suppression systems use this method of actuation. An explosion protection system or feature, such as an abort gate in a system pneumatically conveying particulate solids, may use an electromagnet to hold the abort gate open. Detection of a spark in the particulate flow de-energizes the magnet allowing the gate to open or close depending on the arrangement. A pressure switch that actuates closure of dampers in a space protected by a clean agent fire suppression system could be considered an electromechanical device since it translates a mechanical force (closure of the switch) into an electrical output (an electrical signal to close the dampers).

17(4).

Switches actuating fire suppression systems from the fire alarm control unit must be inspected semiannually, but inspection of the suppression system is conducted in accordance with the requirements of the code or standard that addresses the fire suppression system. Other codes or standards that could apply include the following:

NFPA 12, *Standard on Carbon Dioxide Extinguishing Systems*
NFPA 12A, *Standard on Halon 1301 Fire Extinguishing Systems*
NFPA 16, *Standard for the Installation of Foam-Water Sprinkler and Foam-Water Spray Systems*
NFPA 17, *Standard for Dry Chemical Extinguishing Systems*
NFPA 2001, *Standard on Clean Agent Fire Extinguishing Systems*

17(5).

A visual inspection of a manual fire alarm box should note any obvious physical damage and confirm unobstructed access to the device. It is not uncommon for building occupants to move furniture, storage boxes, or other materials in front of a manual fire alarm box, thereby obstructing free access in an emergency.

A visual inspection should discover and initiate action to correct any problems discovered by the inspection. Exhibit 14.10 shows how the placement of furnishings and other material can obstruct access to a manual fire alarm box. Such conditions should be noted on the inspection report for follow-up corrective action.

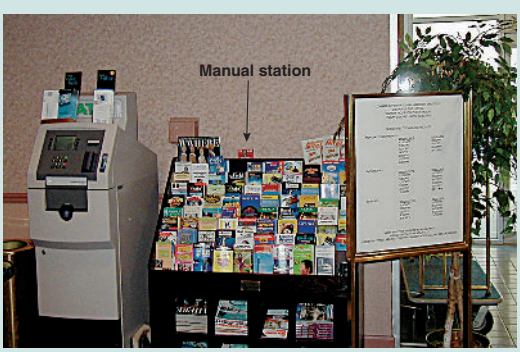

EXHIBIT 14.10

Obstructed Manual Fire Alarm Box. (Source: Automatic Fire Alarm Association, Inc., Gahanna, OH)

Δ ***TABLE 14.3.1*** *Continued*

Component	*Initial Acceptance*	*Periodic Frequency*	*Method*	*Reference*
(6) Heat detectors	X	Semiannual		
(7) Radiant energy fire detectors	X	Quarterly	Verify no point requiring detection is obstructed or outside the detector's field of view.	17.8
(8) Video image smoke and fire detectors	X	Quarterly	Verify no point requiring detection is obstructed or outside the detector's field of view.	17.7.7; 17.11.5
(9) Smoke detectors (excluding one- and two-family dwellings)	X	Semiannual		
(10) Projected beam smoke detectors	X	Semiannual	Verify beam path is unobstructed.	
(11) Supervisory signal devices	X	Quarterly		
(12) Waterflow devices	X	Quarterly		

18. Reserved

(continues)

EXHIBIT 14.11

Heat Detector Covered with Tape. (Courtesy of Jeffrey Moore, P.E., JENSEN HUGHES)

EXHIBIT 14.12

Smoke Detector Improperly Secured. (Courtesy of Jeffrey Moore, P.E., JENSEN HUGHES)

EXHIBIT 14.13

Smoke Detector with Cover Not Removed after Construction. (Courtesy of Jeffrey Moore, P.E., JENSEN HUGHES)

EXHIBIT 14.14

Initiating Device Showing Signs of Paint Overspray, and the Device Is in Alarm. (Courtesy of Jeffrey Moore, P.E., JENSEN HUGHES)

EXHIBIT 14.15

Damaged Junction Box on a Post Indicator Valve. (Courtesy of Jeffrey Moore, P.E., JENSEN HUGHES)

Table Commentary

17(6).

Heat detectors should be inspected to confirm that they are free of mechanical or water damage, have not been painted, and are properly secured, and to verify that altered building conditions (such as the installation of a new wall or removal of a drop ceiling) have not reduced the effectiveness of the devices. Inspection personnel are not necessarily expected to be trained or knowledgeable in the design requirements for the installation of heat detectors, but they should be capable of identifying conditions that could affect the operation of heat detectors. For example, an inspector may not be familiar with the requirement for a heat detector to be mounted on the ceiling, but they could note that a drop ceiling has been removed from a space and that the heat detector is now located 3 ft (1 m) below the roof deck. A supervisor reviewing the inspection report could then schedule a follow-up inspection to determine the potential effect on the operation of the heat detector or to schedule corrective action.

A visual inspection should note that the heat detector shown in Exhibit 14.11 was covered with tape that was not removed after painting operations were complete.

17(7).

Because radiant energy fire detectors (flame detectors or spark/ember detectors as defined by the Code) are line-of-sight devices, it is important to confirm that there are no physical obstructions between the detector and the protected area. Toolboxes, movable partitions, and other objects block the vision of the detector the same way that they block human sight. If an inspector standing at the location of the detector cannot see the entire protected area, then it is likely the detector cannot see it either. Contaminants on the lens may also obscure vision of the detector. The orientation of the detector should be checked against the original record drawings to confirm that it is oriented to "see" the intended area of protection. The manufacturer's published instructions should be consulted for other items to be inspected for the particular type of detector.

17(8).

Video imaging smoke detection systems do not depend on smoke traveling from the fire source to the detector. These systems use a video image of the protected space and computer algorithms to determine the presence of a fire. Visual inspections should detect obvious problems, such as physical damage. Consult the manufacturer's published instructions for specific inspection requirements for these unique systems.

17(9).

Some smoke detectors may be monitored for contamination by the fire alarm control unit and provide a signal when the detector is "dirty." This arrangement will not detect obstructions (e.g., covered detectors) that might affect the operation of the detector and does not take the place of an actual visual inspection. Renovation, construction, or some types of cleaning may require the detectors to be covered to avoid contamination or nuisance alarms. After project completion, the covers may be forgotten and inadvertently left in place. A visual inspection ensures that covers, bags, tape, or other coverings have been removed. Refer to 17.7.1.12 for requirements related to the protection of smoke detectors during construction.

Visual inspection of smoke detectors should confirm that they are present, not damaged, and not blocked or obstructed. The visual inspection should note conditions such as the detector not properly supported or secured from the building structure (see Exhibit 14.12), the protective cover still in place after construction (see Exhibit 14.13), and signs of paint overspray (see Exhibit 14.14).

17(11).

A visual inspection of a supervisory initiating device installed outdoors should confirm that there is no physical damage and that covers and watertight seals are in place.

A visual inspection should detect conditions such as the damaged junction box and gasket on the post indicator valve (PIV) shown in Exhibit 14.15.

NFPA 720

Δ ***TABLE 14.3.1*** *Continued*

	Component	*Initial Acceptance*	*Periodic Frequency*	*Method*	*Reference*
19.	Combination systems			Verify location and condition (all types).	
	(1) Fire extinguisher electronic monitoring devices/systems	X	Semiannual		
	(2) Carbon monoxide detectors/systems	X	Semiannual		
20.	Alarm control interface and emergency control function interface	X	Semiannual	Verify location and condition.	
21.	Guard's tour equipment	X	Semiannual	Verify location and condition.	
22.	Notification appliances			Verify location and condition (all appliances).	
	(1) Audible appliances	X	Semiannual		
	(2) Loudspeakers	X	Semiannual		
	(3) Visual appliances				
	(a) General	X	Semiannual		18.5.5
	(b) Candela rating	X	N/A	Verify the appliance candela rating marking or the FACU controlled candela rating agrees with the approved drawings.	18.5.5
23.	Exit marking audible notification appliances	X	Semiannual	Verify location and condition.	
24.	Reserved				
25.	Two-way emergency communications systems	X	Annual	Verify location and condition.	
26.	Reserved				
27.	Supervising station alarm systems — receivers				
	(1) Signal receipt	X	Daily	Verify receipt of signal.	
	(2) Receivers	X	Annual	Verify location and normal condition.	
28.	Public emergency alarm reporting system transmission equipment			Verify location and condition.	
	(1) Publicly accessible alarm box	X	Semiannual		
	(2) Auxiliary box	X	Annual		
	(3) Master box				
	(a) Manual operation	X	Semiannual		
	(b) Auxiliary operation	X	Annual		
29.	Reserved				

(continues)

Table Commentary

19(2).

Combination systems are systems that include a fire alarm system and another non-fire system. The fire alarm system must still be inspected in accordance with Chapter 14, which does not require inspection of the non-fire alarm system components. Refer to the definition of the term *combination system* in 3.3.111.1 and to the requirements in 23.8.4.

Because NFPA 720, *Standard for the Installation of Carbon Monoxide (CO) Detection and Warning Equipment*, has been withdrawn, the requirements for these systems, including inspection, testing, and maintenance requirements, have been incorporated in the 2019 edition of *NFPA 72*.

20.

Visual inspection of equipment interfaced with the fire alarm system, such as an elevator system, should reveal problems such as a smoke detector installed in an unsuitable environment. Unless specially listed for other environmental conditions, smoke detectors are permitted only where the temperature is at least 32°F (0°C), not more than 100°F (38°C), and the humidity does not exceed 93 percent. See 17.7.1.8.

22.

Inspect audible and visual notification appliances to confirm that there are no obstructions impairing their effectiveness, that they do not have physical damage, and that changing building conditions have not rendered the appliances ineffective. For example, where walls have been added to a space, or floor or wall coverings have changed, additional notification appliances may be required to ensure compliance with the requirements of Chapter 18. Sound pressure level measurements may be needed to assess the performance of audible appliances, and the candela setting of visual appliances should be assessed.

Visual inspection of notification appliances should note conditions that could adversely affect their operation, such as obvious physical damage (see Exhibit 14.16) and evidence of tampering (see Exhibit 14.17).

EXHIBIT 14.16

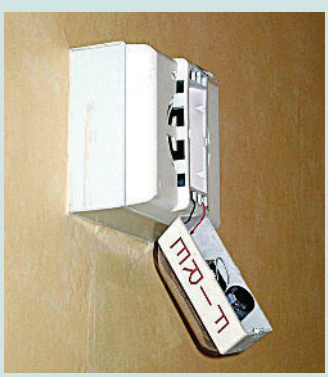

Damaged Appliance. (Courtesy of Jeffrey Moore, P.E., JENSEN HUGHES)

EXHIBIT 14.17

Evidence of Appliance Tampering. (Courtesy of Jeffrey Moore, P.E., JENSEN HUGHES)

Δ ***TABLE 14.3.1*** *Continued*

Component	*Initial Acceptance*	*Periodic Frequency*	*Method*	*Reference*
30. Mass notification system				
(1) Monitored for integrity			Verify a system normal condition.	
(a) Control equipment				
(i) Fuses	X	Annual		
(ii) Interfaces	X	Annual		
(iii) Lamps/LED	X	Annual		
(iv) Primary (main) power supply	X	Annual		
(b) Secondary power batteries	X	Annual		
(c) Initiating devices	X	Annual		
(d) Notification appliances	X	Annual		
(2) Not monitored for integrity; installed prior to adoption of the 2010 edition			Verify a system normal condition.	
(a) Control equipment				
(i) Fuses	X	Semiannual		
(ii) Interfaces	X	Semiannual		
(iii) Lamps/LED	X	Semiannual		
(iv) Primary (main) power supply	X	Semiannual		
(b) Secondary power batteries	X	Semiannual		
(c) Initiating devices	X	Semiannual		
(d) Notification appliances	X	Semiannual		
(3) Antenna	X	Annual	Verify location and condition.	
(4) Transceivers	X	Annual	Verify location and condition.	

Note: N/A = not applicable, no minimum requirement established.
*For other than VRLA or primary (dry) cell batteries, refer to the battery manufacturer's published instructions or IEEE 450, *Recommended Practice for Maintenance, Testing, and Replacement of Vented Lead-Acid Batteries for Stationary Applications*, for vented lead-acid batteries, and IEEE 1106, *Recommended Practice for Installation, Maintenance, Testing, and Replacement of Vented Nickel-Cadmium Batteries for Stationary Applications*, for nickel-cadmium batteries.

The inspection and testing requirements for batteries have been updated to reflect current industry standards. This information is available in the published instructions from the battery manufacturers and the referenced IEEE standards.

Table Commentary

30(1).

The visual inspection frequencies identified for mass notification systems (MNSs) apply to stand-alone systems monitored by a supervising station. For an integrated or combination fire alarm/MNS, visual inspection frequencies should comply with those identified for fire alarm systems in lieu of those frequencies identified for MNSs.

30(2).

The visual inspection frequencies identified for MNSs apply to systems not monitored by a supervising station or those installed before the 2010 edition of *NFPA 72*. For an integrated or combination fire alarm/MNS, visual inspection frequencies should comply with those identified for fire alarm systems in place of those frequencies identified for MNSs.

A.14.3.1 Equipment performance can be affected by building modifications, occupancy changes, changes in environmental conditions, device location, physical obstructions, device orientation, physical damage, improper installation, degree of cleanliness, or other obvious problems that might not be indicated through electrical supervision.

The intent of 14.3.1 is to prevent an inspection being made at intervals exceeding those allowed by Table 14.3.1. Annual inspections should be made every 12 months; monthly inspections should be made every 30 days, and so forth. For example, it is not acceptable to conduct an annual inspection in January of year one, and December of year two (23 month frequency) just because Table 14.3.1 requires an inspection once each year.

14.3.2 Devices or equipment that is inaccessible for safety considerations (e.g., continuous process operations, energized electrical equipment, radiation, and excessive height) shall be permitted to be inspected during scheduled shutdowns if approved by the authority having jurisdiction.

Personnel conducting inspections often encounter situations that prevent visual inspection of devices in locations or areas that pose a significant safety hazard. Such situations might include inside compartments or areas containing radiation hazards, inside electrical equipment, or on the top of a continuous process structure. The purpose of this subsection is to provide some relief from the visual inspection frequencies in these situations. However, this subsection does not exempt a system component from visual inspection simply because it may be inconvenient or difficult to access. In all cases, a reduced inspection frequency requires the approval of the authority having jurisdiction.

14.3.3 Extended intervals shall not exceed 18 months.

14.3.4 Initial and reacceptance inspections shall be made to ensure compliance with approved design documents and to ensure installation in accordance with this Code and other required installation standards.

14.3.5 Periodic visual inspections in accordance with Table 14.3.1 shall be made to assure that there are no changes that affect equipment performance.

Subsections 14.3.4 and 14.3.5 clarify the reasoning for conducting visual inspections and direct the user to the inspection frequencies and methods in Table 14.3.1. See also the commentary following 14.2.1.3.

14.4 Testing.

14.4.1 Initial Acceptance Testing.

FM

14.4.1.1 All new systems shall be inspected and tested in accordance with the requirements of Chapter 14.

Although 14.4.1.1 is only a single paragraph, it contains all the requirements for acceptance testing by requiring the acceptance test to comply with Chapter 14. Since the inspection frequencies and methods in Table 14.3.1 and the testing frequencies and methods in Table 14.4.3.2 require that all system devices, appliances, components, and functions be tested at the initial acceptance test, this paragraph has the effect of requiring a 100 percent test of the system, including all devices, appliances, circuits, and functions.

14.4.1.2 The authority having jurisdiction shall be notified prior to the initial acceptance test.

Authorities having jurisdiction must have the opportunity to witness the acceptance testing. In many cases, this is the only opportunity they have to see the system operate as required by the approved design documents and the Code requirements. Many authorities having jurisdiction require that specific procedures be followed when they are requested to attend an acceptance test. This might include a minimum number of days of advance notice, submittal of system documentation, submission of an acceptance testing plan, or certification that the installer has already conducted a complete test of the system and has corrected any deficiencies found during the pretest.

14.4.2* Reacceptance Testing.

A.14.4.2 Reacceptance testing is performed to verify the proper operation of added or replaced devices, appliances, emergency control function devices, control equipment, and so forth. It is not the intent of the committee to unduly burden the system owner with increased costs for repeated testing of devices not directly affected by the replacement of devices with like devices.

For example, if a 2 amp fuse is replaced with another 2 amp fuse in the fire alarm control unit, verification of the circuit(s) served by the fused supply is required, but it would not be necessary to test 10 percent of initiating devices not directly affected by replacing the fuse. Likewise, it is not necessary to test all these initiating devices whenever a smoke detector is replaced with a like smoke detector.

When wiring changes are made to correct improperly supervised circuits, a test of the affected device or appliance is required, but not a test of 10 percent of initiating devices not directly affected.

14.4.2.1 When an initiating device, notification appliance, or control relay is added, it shall be functionally tested.

For the simple addition or replacement of an initiating device, notification appliance, or control relay, testing is required only of the new component. For example, if a new manual fire alarm box is installed on an initiating device circuit, only the new manual fire alarm box needs to be tested to ensure proper operation.

14.4.2.2 When an initiating device, notification appliance, or control relay is deleted, another device, appliance, or control relay on the circuit shall be operated.

14.4.2.3 When modifications or repairs to control equipment hardware are made, the control equipment shall be tested in accordance with Table 14.4.3.2, items 2(1) and 2(4).

14.4.2.4 When changes are made to site-specific software, the following shall apply:

(1) All functions known to be affected by the change, or identified by a means that indicates changes, shall be 100 percent tested.
(2) In addition, 10 percent of initiating devices that are not directly affected by the change, up to a maximum of 50 devices, also shall be tested and correct system operation shall be verified.
(3) A revised record of completion in accordance with 7.5.6 shall be prepared to reflect these changes.

Modern software-driven fire alarm systems are easily modified to accept new devices or to change the address or response of existing devices. These changes are often handled by changes to the site-specific software in the fire alarm control unit. The software controlling a fire alarm or signaling system is like any other computer program. Sometimes what seems like a minor change may have unintended

consequences. For example, if a line of computer code is entered in a program to recognize a new initiating device, but the code is placed in the incorrect location in the program, it might result in an unintended response, such as discharge of a fire suppression system when the manual fire alarm box is activated. In some cases, large portions of a system have been found inoperable due to faulty reprogramming during a repair or test.

The requirements of 14.4.2.4 ensure that the affected portion of the system is tested completely. The paragraph requires further testing to verify that other portions of the system have not been adversely affected by the modification. The 10 percent sample should be selected randomly and include at least one device per initiating device circuit or signaling line circuit (SLC). If all the devices are installed on one SLC, multiple devices (a 10 percent sample) should be tested at different sections of the circuit. Use of comparison algorithms, or programs that compare two sets of data to determine the differences between them, can also help determine where program changes may have occurred, but are not an alternative to the testing required by 14.4.2.4. See 3.3.279.2 for the definition of the term *site-specific software*.

If a system change adds a single smoke detector to an existing initiating device circuit, only the new smoke detector is required to be tested for proper operation. If the system is changed by adding a smoke detector to an SLC and the site-specific software in the system is changed to accommodate the new smoke detector, 14.4.2.4 requires testing of the new smoke detector as well as a test of 10 percent of the remaining initiating devices, up to a maximum of 50 devices, to verify proper system operation.

14.4.2.5 Changes to the system executive software shall require a 10 percent functional test of the system, including a test of at least one device on each input and output circuit to verify critical system functions such as notification appliances, control functions, and off-premises reporting.

Changes to the system executive or system software can be likened to updating the operating system of a desktop computer. The updated software affects the entire system. It is possible that the updated software will work without any problems, but it is also possible that the updated software may demonstrate some incompatibility or instability when interacting with existing software. The same conditions are possible in a software-driven fire alarm or signaling system. The 10 percent functional test of the system with at least one device on each input and output circuit is intended as a means to verify that the updated executive software does not result in unintended actions or adversely affect the site-specific software in the system.

14.4.3* Test Methods.

A.14.4.3 Fire alarm system testing can be conducted using silent testing and the bypassing of emergency control functions. All input signals should be verified according to the system matrix of operation to ensure they create the appropriate outputs. Tests of audible notification appliances and emergency control functions should be conducted at the conclusion of satisfactory tests of all inputs.

The intent is to reduce the amount of time spent causing audible and visual occupant notification during tests in an occupied building. This reduction will help reduce the negative (cry wolf) impact on occupants caused by excessive operation of notification appliances. System printouts or history logs are an effective way of verifying the correct receipt of signals. However, many outputs such as occupant notification and emergency control functions are tested for correct operation, because logs do not necessarily verify operation of the system output. Operation of audible and visual notification appliances could be accomplished in a lump sum fashion after all inputs are proven correct by silent testing. All inputs tested in this manner must be proved to cause the appropriate signal by verifying alarm receipt at the controls as each device is actuated. Manufacturer-specific protocols such as "walk test"

or "alarm bypass" are an acceptable means of testing under this section. Other methods of mitigating the negative impact include off-hours tests when the building is not occupied.

Silent tests are permitted. The continuous operation of notification appliances can desensitize building occupants to the signals and may result in the signals being ignored during an actual emergency. The type of testing described in A.14.4.3 is intended to minimize the "cry wolf" syndrome by reducing the duration of notification appliance operation. More information is provided in the article "Cry Wolf," published in the Fall 2003 issue of *NEMA Magazine*.

14.4.3.1* At the request of the authority having jurisdiction, the central station facility installation shall be inspected for complete information regarding the central station system, including specifications, wiring diagrams, and floor plans that have been submitted for approval prior to installation of equipment and wiring.

A.14.4.3.1 If the authority having jurisdiction strongly suspects significant deterioration or otherwise improper operation by a central station, a surprise inspection to test the operation of the central station should be made, but extreme caution should be exercised. This test is to be conducted without advising the central station. However, the communications center must be contacted when manual alarms, waterflow alarms, or automatic fire detection systems are tested so that the fire department will not respond. In addition, persons normally receiving calls for supervisory alarms should be notified when items such as gate valves and functions such as pump power are tested. Confirmation of the authenticity of the test procedure should be obtained and should be a matter for resolution between plant management and the central station.

Δ **14.4.3.2*** Systems and associated equipment shall be tested according to Table 14.4.3.2.

NFPA 720

FM

Table 14.4.3.2 lists each system component, states whether it must be tested as part of initial acceptance testing, and provides the frequency of periodic testing and method of testing.

Table 14.4.3.2 starts on the next page. Note that the table continues on the left-hand pages that follow; the commentary that corresponds with the table appears on the right-hand pages.

Δ ***TABLE 14.4.3.2*** *Testing*

	Component	*Initial Acceptance*	*Periodic Frequency*	*Method*
1.	All equipment	X		See Table 14.3.1.
2.	Control equipment and transponder			
	(1) Functions	X	Annually	Verify correct receipt of alarm, supervisory, and trouble signals (inputs); operation of evacuation signals and auxiliary functions (outputs); circuit supervision, including detection of open circuits and ground faults; and power supply supervision for detection of loss of ac power and disconnection of secondary batteries.
	(2) Fuses	X	Annually	Verify rating and supervision.
	(3) Interfaced equipment	X	Annually	Verify integrity of single or multiple circuits providing interface between two or more control units. Test interfaced equipment connections by operating or simulating operation of the equipment being supervised. Verify signals required to be transmitted at the control unit.
	(4) Lamps and LEDs	X	Annually	Illuminate lamps and LEDs.
	(5) Primary (main) power supply	X	Annually	Disconnect all secondary (standby) power and test under maximum load, including all alarm appliances requiring simultaneous operation. Reconnect all secondary (standby) power at end of test. Test redundant power supplies separately.
3.	Alarm control unit trouble signals			
	(1) Audible and visual	X	Annually	Verify operation of control unit trouble signals. Verify ring-back feature for systems using a trouble-silencing switch that requires resetting.
	(2) Disconnect switches	X	Annually	If control unit has disconnect or isolating switches, verify performance of intended function of each switch. Verify receipt of trouble signal when a supervised function is disconnected.
	(3) Ground-fault monitoring circuit	X	Annually	If the system has a ground detection feature, verify the occurrence of ground-fault indication whenever any installation conductor is grounded.
	(4) Transmission of signals to off-premises location	X	Annually	Actuate an initiating device and verify receipt of alarm signal at the off-premises location. Create a trouble condition and verify receipt of a trouble signal at the off-premises location. Actuate a supervisory device and verify receipt of a supervisory signal at the off-premises location. If a transmission carrier is capable of operation under a single- or multiple-fault condition, actuate an initiating device during such fault condition and verify receipt of an alarm signal and a trouble signal at the off-premises location.
4.	Supervising station alarm systems — transmission equipment			

(continues)

Table Commentary

2(1).

The purpose of testing of the input/output functions, or sequence of operation, for control equipment is to ensure that the system functions as intended. For example, if the sequence of operation intends that actuation of a manual fire alarm box start a stairwell pressurization fan, this function should be confirmed through testing. It is not required to test functions internal to the equipment, such as software algorithms and communications protocols (sometimes called *firmware*). A functional test verifying that a Class A circuit is capable of initiating an alarm signal from either side of an open circuit fault is another example of a function test.

2(2).

Verifying the rating and supervision of fuses is important because an incorrect fuse rating can lead to equipment damage or unnecessary loss of power. It is not always possible to tell by visual inspection whether a fuse is open. The most reliable means to determine the integrity of a fuse is to remove it from its receptacle and connect both sides of the fuse to a continuity tester (e.g., an electrical multimeter). This test should not be performed while the fuse is plugged in because it is possible to detect continuity through a path other than the fuse.

2(3).

The wiring connections must be tested by simulating a single open and a single ground to verify initiation of a trouble signal and proper indication on the control unit(s) where the circuit or pathway to interfaced equipment wiring is monitored for integrity. Simulation of a trouble condition in the interfaced equipment should initiate a supervisory signal on the fire alarm or signaling system. For example, a trouble condition on a monitored control unit for a special fire suppression system should initiate a supervisory signal on the building fire alarm control unit.

3(3).

It is important to test for a ground fault by using a jumper from a wired terminal (not a power terminal) on the control unit to ground and verify that the ground-fault light illuminates on the control unit if it is equipped with this feature. The results of these tests should be recorded on the acceptance test report for future troubleshooting information. Note that the control equipment may take up to 200 seconds to indicate a trouble/ground condition (see 12.6.1). It is not necessary to test for ground-fault trouble signals at each installed initiating device or notification appliance. A test of each circuit is sufficient to confirm the trouble signal is initiated and displayed at the control unit. Not all existing control units are equipped with a separate ground-fault indicator. Introduction of a ground fault may simply initiate a common trouble signal.

4.

The tests required for supervising station transmission equipment provide comprehensive methods for testing this equipment. Confirmation of transmission to and receipt of fire alarm signals at the supervising station is no less important than detection of the fire.

Δ ***TABLE 14.4.3.2*** *Continued*

Component	*Initial Acceptance*	*Periodic Frequency*	*Method*
(1) All equipment	X	Annually	[a]Test all system functions and features in accordance with the equipment manufacturer's published instructions for correct operation in conformance with the applicable sections of Chapter 26. Except for DACT, actuate initiating device and verify receipt of the correct initiating device signal at the supervising station within 90 seconds. Upon completion of the test, restore the system to its functional operating condition. If test jacks are used, conduct the first and last tests without the use of the test jack.
(2) Digital alarm communicator transmitter (DACT)	X	Annually	Except for DACTs installed prior to adoption of the 2013 edition of *NFPA 72* that are connected to a telephone line (number) that is also supervised for adverse conditions by a derived local channel, ensure connection of the DACT to two separate means of transmission. Test DACT for line seizure capability by initiating a signal while using the telephone line (primary line for DACTs using two telephone lines) for a telephone call. Ensure that the call is interrupted and that the communicator connects to the digital alarm receiver. Verify receipt of the correct signal at the supervising station. Verify each transmission attempt is completed within 90 seconds from going off-hook to on-hook. Disconnect the telephone line (primary line for DACTs using two telephone lines) from the DACT. Verify indication of the DACT trouble signal occurs at the premises fire alarm control unit within 4 minutes of detection of the fault. Verify receipt of the telephone line trouble signal at the supervising station. Restore the telephone line (primary line for DACTs using two telephone lines), reset the fire alarm control unit, and verify that the telephone line fault trouble signal returns to normal. Verify that the supervising station receives the restoral signal from the DACT. Disconnect the secondary means of transmission from the DACT. Verify indication of the DACT trouble signal occurs at the premises fire alarm control unit within 4 minutes of detection of the fault. Verify receipt of the secondary means trouble signal at the supervising station. Restore the secondary means of transmission, reset the fire alarm control unit, and verify that the trouble signal returns to normal. Verify that the supervising station receives the restoral signal from the secondary transmitter. Cause the DACT to transmit a signal to the DACR while a fault in the telephone line (number) (primary line for DACTs using two telephone lines) is simulated. Verify utilization of the secondary communications path by the DACT to complete the transmission to the DACR.
(3) Digital alarm radio transmitter (DART)	X	Annually	Disconnect the primary telephone line. Verify transmission of a trouble signal to the supervising station by the DART occurs within 4 minutes.

(continues)

Table Commentary

4(2).

A digital alarm communicator transmitter (DACT) is required to use one telephone line (number) and a secondary means of signal transmission as detailed in 26.6.4.1.4. The interval for transmitting test signals was changed in the 2013 edition, from every 24 hours to every 6 hours. See 26.6.4.1.4 and 26.6.4.1.5 for more information.

Δ ***TABLE 14.4.3.2*** *Continued*

Component	*Initial Acceptance*	*Periodic Frequency*	*Method*
(4) McCulloh transmitter	X	Annually	Actuate initiating device. Verify production of not less than three complete rounds of not less than three signal impulses each by the McCulloh transmitter. If end-to-end metallic continuity is present and with a balanced circuit, cause each of the following four transmission channel fault conditions in turn, and verify receipt of correct signals at the supervising station: (1) Open (2) Ground (3) Wire-to-wire short (4) Open and ground If end-to-end metallic continuity is not present and with a properly balanced circuit, cause each of the following three transmission channel fault conditions in turn, and verify receipt of correct signals at the supervising station: (1) Open (2) Ground (3) Wire-to-wire short
(5) Radio alarm transmitter (RAT)	X	Annually	Cause a fault between elements of the transmitting equipment. Verify indication of the fault at the protected premises, or transmission of trouble signal to the supervising station.
(6) Performance-based technologies	X	Annually	Perform tests to ensure the monitoring of integrity of the transmission technology and technology path. Where shared communications equipment is used as permitted by 26.6.3.1.14, provided secondary (standby) power sources shall be tested in accordance with Table 14.4.3.2, item 7, 8, or 9, as applicable. Where a single communications path is used, disconnect the communication path. Manually initiate an alarm signal transmission or allow the check-in (handshake) signal to be transmitted automatically. [b]Verify the premises unit annunciates the failure within 200 seconds of the transmission failure. Restore the communication path. Where multiple communication paths are used, disconnect both communication paths. Manually initiate an alarm signal transmission. Verify the premises control unit annunciates the failure within 200 seconds of the transmission failure. Restore both communication paths.
5. Emergency communications equipment			
(1) Amplifier/tone generators	X	Annually	Verify correct switching and operation of backup equipment.
(2) Call-in signal silence	X	Annually	Operate/function and verify receipt of correct visual and audible signals at control unit.
(3) Off-hook indicator (ring down)	X	Annually	Install phone set or remove phone from hook and verify receipt of signal at control unit.
(4) Phone jacks	X	Annually	Visually inspect phone jack and initiate communications path through jack.

(continues)

Table Commentary

5(4).

Phone jacks on each floor or zone must be tested for proper operation as part of the initial acceptance and annually as part of periodic system testing.

Δ ***TABLE 14.4.3.2*** *Continued*

	Component	*Initial Acceptance*	*Periodic Frequency*	*Method*
	(5) Phone set	X	Annually	Actuate each phone set and verify correct operation.
	(6) System performance	X	Annually	Operate the system with a minimum of any five handsets simultaneously. Verify voice quality and clarity.
6.	Engine-driven generator	X	Monthly	If an engine-driven generator dedicated to the system is used as a required power source, verify operation of the generator and transfer switch in accordance with NFPA 110 by the building owner.
7.	Energy storage systems (ESS)	X	Annually	If an ESS system dedicated to the system is used as a required power source, verify by the building owner operation of the ESS system in accordance with NFPA 111.
8.	Secondary (standby) power supply[c]	X	Annually	Disconnect all primary (main) power supplies and verify the occurrence of required trouble indication for loss of primary power. Measure or verify the system's standby and alarm current demand using the equipment manufacturer's data and verify the battery's rated capacity exceeds the system's power demand, including the safety margin. Operate general alarm systems a minimum of 5 minutes and emergency voice communications systems for a minimum of 15 minutes. Reconnect primary (main) power supply at end of test.
9.	VRLA battery and charger[d]			Prior to conducting any battery testing, verify by the person conducting the test, that all system software stored in volatile memory is protected from loss.
	(1) Temperature test	X	Semiannually	Upon initially opening the cabinet door, measure and record the temperature of each battery cell/unit at the negative terminal with an infrared thermometer. Replace any battery cell/unit if the temperature is greater than 18°F (10°C) above ambient.
	(2) Charger test[f]	X	Semiannually	With the battery fully charged and connected to the charger, measure the voltage across the battery with a voltmeter. Verify the voltage is within the battery/alarm equipment manufacturer's recommendations. If the voltage is outside of the specified limits, either adjust the charger to within limits or replace the charger.
	(3) Cell/Unit voltage test	X	Semiannually	With the battery fully charged and connected to the charger, measure the voltage of each cell/unit with a voltmeter. Replace the battery when any cell/unit measures a voltage less than 13.26 volts.

(continues)

Table Commentary

7.

The term *uninterruptible power supply (UPS)* has been updated to *energy storage system (ESS)*, but the requirements have not changed.

8.

The required battery capacity for a secondary power supply is calculated by determining quiescent (standby) and alarm loads for the system. The manufacturer provides the current draw for a fire alarm system component in both the quiescent and alarm states. System documentation should include battery calculations that show the required capacity of any batteries providing the secondary power supply. Calculations must include a 20 percent factor of safety. This has been a requirement for new systems since the 2010 edition of the Code. See 10.6.7.2.

9.

The testing requirements for batteries have been completely revised and include eliminating battery types not used in fire alarm systems. The revisions also introduce test methods that reflect the testing requirements of battery manufacturers and other national consensus standards necessary to support an effective battery replacement program that ensures a reliable secondary power source, focusing on battery replacement, capacity (load) testing, and alternative test methods.

9(1)

Because VRLA batteries are rated at 77°F (25®C), the desired ambient area battery temperature should be maintained between 70°F (21.1°C) and 80°F (26.7°C). Operation at higher temperatures for extended periods shortens battery life. In general, for every 15°F (9.4°C) of continuous operation above 77°F (25°C) the service life of a VRLA battery is reduced by at least 50 percent. VRLA batteries are also more susceptible to other failure modes such as dry out or thermal runaway when operated at very high temperatures. Batteries operating at 18°F (10°C) above ambient area temperature are required to be replaced. The ambient area temperature should be measured inside the battery enclosure, not in the surrounding area.

9(3)

The voltage of each battery unit must be checked periodically to ensure that all units in the battery string are charging together. A unit with less than 13.26 volts is not accepting a full charge. This indicates internal degradation. Other units making up the battery will attempt to compensate by accepted higher charging voltages and likely exhibit problems associated with overcharging.

Δ ***TABLE 14.4.3.2*** *Continued*

Component	*Initial Acceptance*	*Periodic Frequency*	*Method*
(4) Ohmic test[g]	X	N/A	When the battery is installed, establish a baseline ohmic value for each battery cell/unit or where available use baseline ohmic values provided by the battery or test equipment manufacturer. In either case record the base line ohmic value on each battery cell/unit.
		Semiannually	With the battery fully charged and connected to the charger, measure the internal ohmic value of each battery cell/unit. Record the test date and ohmic value on each cell/unit. Replace the battery when the ohmic measurement of any cell/unit deviates from the established baseline by 30% or more for conductance and 40% or more for resistance or impedance. Where the battery or test equipment manufacturer's baseline ohmic values are used, replace the battery when any cell/unit has an internal ohmic value outside of the acceptable range.
(5) Replacement/ Load test[h]		3 years	Replace the battery or conduct a load test of the battery capacity. Load test the battery based on the manufacturer's specifications for a discharge rate of 3 hours or more by applying the current indicated for the selected hourly discharge rate continuously, until the terminal voltage decreases to the end voltage specified by the manufacturer. Record the test duration and calculate the battery capacity including adjustment for ambient temperature. Replace the battery if capacity is less than or equal to 80% or at the next scheduled test interval if battery capacity is less than 85%.
10. Public emergency alarm reporting system — wired system	X	Daily	Manual tests of the power supply for public reporting circuits shall be made and recorded at least once during each 24-hour period. Such tests shall include the following: (1) Current strength of each circuit. Changes in current of any circuit exceeding 10 percent shall be investigated immediately. (2) Voltage across terminals of each circuit inside of terminals of protective devices. Changes in voltage of any circuit exceeding 10 percent shall be investigated immediately. (3)[i] Voltage between ground and circuits. If this test shows a reading in excess of 50 percent of that shown in the test specified in (2), the trouble shall be immediately located and cleared. Readings in excess of 25 percent shall be given early attention. These readings shall be taken with a calibrated voltmeter of not more than 100 ohms resistance per volt. Systems in which each circuit is supplied by an independent current source (Forms 3 and 4) require tests between ground and each side of each circuit. Common current source systems (Form 2) require voltage tests between ground and each terminal of each battery and other current source. (4) Ground current reading shall be permitted in lieu of (3). If this method of testing is used, all grounds showing a current reading in excess of 5 percent of the supplied line current shall be given immediate attention.

(continues)

Table Commentary

9(4)

Effective trending to determine battery service life using ohmic values requires establishment of a baseline ohmic value when the battery is installed. Ohmic values may be available from the test equipment or battery manufacturer. When ohmic values are unavailable, a baseline may be established by testing known healthy batteries or by trending the site-specific ohmic values of the installed battery. The best baseline is one established on the installed battery. When establishing a site-specific baseline, the ohmic value should be recorded at installation and again after the battery has been on charge for approximately 72 hours to allow stabilization. Ohmic values will gradually improve after being on charge for 90 to 180 days. After 6 months, measure the ohmic value and use the best value obtained since installation as the baseline going forward.

As a battery ages and loses capacity, internal ohmic values change. Experience and extensive test data show that a deviation of ohmic values from the established baseline by 30 percent or more for conductance and 40 percent or more for resistance or impedance indicates that battery capacity has dropped to 80 percent or lower. The end of battery service life is generally reached once capacity decreases to 80 percent.

9(5)

Leading battery manufacturers recommend replacement of VRLA batteries used in standby applications after 3 years based on service life expectancy. Batteries still in operation must be load tested to determine if battery capacity is sufficient to support system power demand. The load test is conducted by applying a constant current specified by the battery manufacturer for a 3-hour discharge rate. Conducting the load test at a 3-hour discharge rate ensures testing of approximately 80 percent of the battery's available power.

10.

Public emergency alarm reporting systems are usually municipal fire alarm systems operated by the local jurisdiction; also see 27.1.1.2. The most common component is the red fire alarm box often seen on a street corner. The requirements for these systems are in Chapter 27, Public Emergency Alarm Reporting Systems.

Δ ***TABLE 14.4.3.2*** *Continued*

Component	*Initial Acceptance*	*Periodic Frequency*	*Method*
			(5) Voltage across terminals of common battery on switchboard side of fuses. (6) Voltage between common battery terminals and ground. Abnormal ground readings shall be investigated immediately. Tests specified in (5) and (6) shall apply only to those systems using a common battery. If more than one common battery is used, each common battery shall be tested.
11. Remote annunciators	X	Annually	Verify the correct operation and identification of annunciators. If provided, verify the correct operation of annunciator under a fault condition.
12. Reserved			
13. Reserved			
14. Reserved			
15. Conductors — metallic			
(1) Stray voltage	X	N/A	Test all installation conductors with a volt/ohmmeter to verify that there are no stray (unwanted) voltages between installation conductors or between installation conductors and ground. Verify the maximum allowable stray voltage does not exceed 1 volt ac/dc, unless a different threshold is specified in the manufacturer's published instructions for the installed equipment.
(2) Ground faults	X	N/A	Test all installation conductors, other than those intentionally and permanently grounded, for isolation from ground per the installed equipment manufacturer's published instructions.
(3) Short-circuit faults	X	N/A	Test all installation conductors, other than those intentionally connected together, for conductor-to-conductor isolation per the manufacturer's published instructions for the installed equipment. Also test these same circuits conductor-to-ground.
(4) Loop resistance	X	N/A	With each initiating and indicating circuit installation conductor pair short-circuited at the far end, measure and record the resistance of each circuit. Verify that the loop resistance does not exceed the limits specified in the published manufacturer's published instructions for the installed equipment.
(5) Circuit integrity	X	N/A	For initial and reacceptance testing, confirm the introduction of a fault in any circuit monitored for integrity results in a trouble indication at the fire alarm control unit. Open one connection at not less than 10 percent of the initiating devices, notification appliances and controlled devices on every initiating device circuit, notification appliance circuit, and signaling line circuit. Confirm all circuits perform as indicated in Sections 23.5, 23.6, and 23.7.
	N/A	Annually	For periodic testing, test each initiating device circuit, notification appliance circuit, and signaling line circuit for correct indication at the control unit. Confirm all circuits perform as indicated in Sections 23.5, 23.6, and 23.7.

(continues)

Table Commentary

11.

Remote annunciation is intended to reduce the time required for fire fighters and first responders to determine the source of a signal. Too much detail on the annunciator is as unhelpful as too little information. All labels and identifying information on a remote annunciator should be discussed with and reviewed by the responding fire department.

Legends and/or room labels (room description and room number) identified on graphic maps mounted adjacent to control equipment or as-built (record) drawings must be accurate and represent the current use of the space. It is imperative that the descriptors identified on the maps or record drawings match the description of the device location identified on the annunciator(s). On arrival at the scene, fire department personnel should be able see the information displayed on the annunciator to be able to cross-reference that location with the map or record drawings to know where to assign fire fighters to specific tasks depending on the type and location of the alarm.

15(4).

The fire alarm control unit manufacturer specifies the maximum loop resistance for a circuit. If the measured loop resistance exceeds the manufacturer's specified limit, the circuit must be revised. Loop resistance can also affect the performance of notification appliance circuits due to voltage drop concerns. Refer to the commentary following 18.3.2.3.

15(5).

The term *circuit integrity,* as used here, means monitoring the integrity of the circuit or pathway as required by 12.6.1. In addition to the open-circuit test at the connection of 10 percent of the components on each circuit, which is required at initial acceptance, testing of each circuit is required on an annual basis to verify that circuits and pathways have not been changed from the original installation.

Δ ***TABLE 14.4.3.2*** *Continued*

Component	*Initial Acceptance*	*Periodic Frequency*	*Method*
16. Conductors — nonmetallic			
(1) Fiber optics	X	N/A	Test the fiber-optic transmission line by the use of an optical power meter or by an optical time domain reflectometer used to measure the relative power loss of the line. Test result data must meet or exceed ANSI/TIA 568-C.3, *Optical Fiber Cabling Components Standard*, related to fiber-optic lines and connection/splice losses and the control unit manufacturer's published specifications.
(2) Circuit integrity	X	N/A	For initial and reacceptance testing, confirm the introduction of a fault in any circuit monitored for integrity results in a trouble indication at the fire alarm control unit. Open one connection at not less than 10 percent of the initiating devices, notification appliances, and controlled devices on every initiating device circuit, notification appliance circuit, and signaling line circuit. Confirm all circuits perform as indicated in Sections 23.5, 23.6, and 23.7.
	N/A	Annually	For periodic testing, test each initiating device circuit, notification appliance circuit, and signaling line circuit for correct indication at the control unit. Confirm all circuits perform as indicated in Sections 23.5, 23.6, and 23.7.
17. Initiating devices[j]			
(1) Electromechanical releasing device			
(a) Nonrestorable-type link	X	Annually	Verify correct operation by removal of the fusible link and operation of the associated device.
(b) Restorable-type link[k]	X	Annually	Verify correct operation by removal of the fusible link and operation of the associated device.
(2) Fire extinguishing system(s) or suppression system(s) alarm switch	X	Annually	Operate the switch mechanically or electrically and verify receipt of signal by the fire alarm control unit.
(3) Fire–gas and other detectors	X	Annually	Test fire–gas detectors and other fire detectors as prescribed by the manufacturer and as necessary for the application.

(continues)

Table Commentary

16(2).

The term *circuit integrity,* as used here, means monitoring the integrity of the circuit or pathway as required by 12.6.1. In addition to the open-circuit test at the connection of 10 percent of the components on each circuit, which is required at initial acceptance, testing of each circuit is required on an annual basis to verify that circuits and pathways have not been changed from the original installation. Note the specific references to Sections 23.5, 23.6, and 23.7 to confirm circuit performance.

17(2).

Testing the operation of a suppression system switch that initiates an alarm signal to the building fire alarm system is required, but operation of other fire suppression system components and functions is not required by *NFPA 72*. The fire suppression system and its components are tested in accordance with the standard that applies to the system. For example, the foam fire suppression system manual actuation switch shown in Exhibit 14.18 is inspected and tested in accordance with NFPA 25.

EXHIBIT 14.18

Foam Fire Suppression System Manual Actuation Switch. (Courtesy of Jeffrey Moore, P.E., JENSEN HUGHES)

Δ ***TABLE 14.4.3.2*** *Continued*

Component	*Initial Acceptance*	*Periodic Frequency*	*Method*
(4) Heat detectors			
(a) Fixed-temperature, rate-of-rise, rate of compensation, restorable line, spot type (excluding pneumatic tube type)	X	Annually (see 14.4.4.5)	Perform heat test with a listed and labeled heat source or in accordance with the manufacturer's published instructions. Assure that the test method for the installed equipment does not damage the nonrestorable fixed-temperature element of a combination rate-of-rise/fixed-temperature element detector.
(b) Fixed-temperature, nonrestorable line type	X	Annually	Do not perform heat test. Test functionality mechanically and electrically. Measure and record loop resistance. Investigate changes from acceptance test.
(c) Fixed-temperature, nonrestorable spot type	X	See Method	After 15 years from initial installation, replace all devices or have 2 detectors per 100 laboratory tested. Replace the 2 detectors with new devices. If a failure occurs on any of the detectors removed, remove and test additional detectors to determine either a general problem involving faulty detectors or a localized problem involving 1 or 2 defective detectors. If detectors are tested instead of replaced, repeat tests at intervals of 5 years.
(d) Nonrestorable (general)	X	Annually	Do not perform heat tests. Test functionality mechanically and electrically.
(e) Restorable line type, pneumatic tube only	X	Annually	Perform heat tests (where test chambers are in circuit), with a listed and labeled heat source or in accordance with the manufacturer's published instructions of the detector or conduct a test with pressure pump.
(f) Single- and multiple-station heat alarms	X	Annually	Conduct functional tests according to manufacturer's published instructions. Do not test nonrestorable heat detectors with heat.

(continues)

Table Commentary

17(4)(a).

Before the 2010 edition of the Code, the heat source was required to be applied for "response within 1 minute." The assumption is that the 1 minute time requirement was introduced as an added level of protection to ensure that the test did not damage the thermal element or the detector housing. The requirement for response within 1 minute was removed from the 2010 edition because in some instances the 1 minute time frame was incorrectly interpreted as a heat detector sensitivity test.

There is no standardized, repeatable test method or test apparatus for all brands and all types of heat detectors. Neither the Code nor the test standards used by the listing organizations specify a specific response time in the field. The heat source and the test method should be as specified in the manufacturer's published instructions. Exercise caution to avoid damaging the detector or its components during testing.

Extreme caution must be used in locations requiring hazardous (classified) electrical equipment (those containing flammable or explosive vapors or dusts) when testing heat detectors. In no case should open flames be used to test any type of heat detector. In most cases, hot water, a hair dryer — provided it is not used in a hazardous (classified) area — or similar safe means can be used to test a heat detector. For some types of rate-of-rise heat detectors, a technician may be able to activate the detector by rubbing his or her hands together and then cupping both hands around the detector. This action is often all it takes to create the rate-of-temperature rise required to activate the detector. The rate-of-rise detector normally operates on a rapid rise in temperature of approximately 12°F to 15°F (6.7°C to 8.3°C) increase per minute.

Exhibit 14.19 shows a cordless device for testing heat detectors.

EXHIBIT 14.19

Cordless Tester for Heat Detectors. (Courtesy of SDi, LLC, Neptune, NJ)

17(4)(b).

The test should be performed by shorting across the conductors at the end-of-line device to simulate actuation of the circuit or by using some other approved method identified in the manufacturer's published instructions for the device. Heat testing of a nonrestorable heat detector will activate the detector and result in the need for replacement.

17(4)(c).

The laboratory test must be conducted by an independent testing laboratory engaged in the listing of heat detectors. The detectors selected for testing must be from the originally installed detectors. Detectors installed to replace those selected for testing purposes should not be sampled until after all original detectors have been tested. Detailed records, such as notations on the record drawings, must be maintained to show which detectors have been removed for testing and replaced with new detectors.

17(4)(d).

Testing can be conducted by operating contacts by hand, electrically shorting the device using a jumper, or other manufacturer-approved method. The purpose of the test is to ensure alarm response. Heat testing of a nonrestorable heat detector will activate the detector and result in the need for replacement.

17(4)(e).

Pneumatic tube–type heat detectors are often found actuating older deluge sprinkler systems or other special fire suppression systems.

Δ ***TABLE 14.4.3.2*** *Continued*

Component	*Initial Acceptance*	*Periodic Frequency*	*Method*
(5) Manual fire alarm boxes	X	Annually	Operate manual fire alarm boxes per the manufacturer's published instructions. Test both key-operated presignal and general alarm manual fire alarm boxes.
(6) Radiant energy fire detectors	X	Semiannually	Test flame detectors and spark/ember detectors in accordance with the manufacturer's published instructions to determine that each detector is operative. Determine flame detector and spark/ember detector sensitivity using any of the following: (1) Calibrated test method (2) Manufacturer's calibrated sensitivity test instrument (3) Listed control unit arranged for the purpose (4) Other approved calibrated sensitivity test method that is directly proportional to the input signal from a fire, consistent with the detector listing or approval If designed to be field adjustable, replace detectors found to be outside of the approved range of sensitivity or adjust to bring them into the approved range. Do not determine flame detector and spark/ember detector sensitivity using a light source that administers an unmeasured quantity of radiation at an undefined distance from the detector.

(*continues*)

Table Commentary

17(5).

Functional testing of a manual fire alarm box includes physically actuating the fire alarm box as it is intended to be operated in an actual emergency. If the fire alarm box is a double-action type with a push-in and pull-down feature, test personnel should physically push in and pull down on the lever to activate the device. Use of a key to open the fire alarm box causing actuation does not meet the testing requirement. A key should be used only to reset the fire alarm box after it has been physically operated.

17(6).

Exhibit 14.20 shows a technician using a manufacturer-provided test instrument to test the response of a flame detector. Consult the published instructions from the manufacturer for proper testing procedures for any type of flame or spark/ember fire detector.

EXHIBIT 14.20

Testing the Response of a Flame Detector. (Courtesy of Jeffrey Moore, P.E., JENSEN HUGHES)

Δ ***TABLE 14.4.3.2*** *Continued*

Component	*Initial Acceptance*	*Periodic Frequency*	*Method*
(7) Smoke detectors — functional test			
(a) In other than one- and two-family dwellings, system detectors	X	Annually	[1]Test smoke detectors in place to ensure smoke entry into the sensing chamber and an alarm response. Use smoke or a listed and labeled product acceptable to the manufacturer or in accordance with their published instructions. Other methods listed in the manufacturer's published instructions that ensure smoke entry from the protected area, through the vents, into the sensing chamber can be used.
(b) Single- and multiple-station smoke alarms connected to protected premises systems	X	Annually	Perform a functional test on all single- and multiple-station smoke alarms connected to a protected premises fire alarm system by putting the smoke alarm into an alarm condition.
(c) System smoke detectors used in one- and two-family dwellings	X	Annually	Conduct functional tests according to manufacturer's published instructions.
(d) Air sampling	X	Annually	Test with smoke or a listed and labeled product acceptable to the manufacturer or in accordance with their published instructions. Test from the end sampling port or point on each pipe run. Verify airflow through all other ports or points.

(continues)

Table Commentary

17(7)(a).

The test method described is considered a "Go/No-Go" functional test to ensure smoke entry into the chamber and alarm response. The test does not test the detector's sensitivity. Because verification of smoke entry must be part of the test, use of a test button or a magnet does not meet the functional test requirement. Any smoke source must be acceptable to the detector manufacturer. The use of a listed aerosol is acceptable provided it is used in accordance with the instructions of both the manufacturer of the aerosol and smoke detector as identified in the published instructions.

For sensitivity test methods that apply to smoke detectors other than those in one- and two-family dwellings, see Item 17(8).

Other listed smoke detection devices not connected to a fire alarm system (often called stand-alone detectors) are sometimes used in HVAC systems, door-releasing applications, and special hazards releasing devices. The requirements in Chapter 14, including sensitivity testing, apply to these types of detectors. Note that in the context of Item 17(7), the term *system detector* generally applies to smoke detection devices other than smoke alarms.

Exhibit 14.21 shows a technician using listed test equipment that generates an aerosol to activate a smoke detector. This test confirms the ability of smoke to enter the sensing chamber and initiation of the appropriate alarm or supervisory signal. Most smoke detectors initiate an alarm signal, but detectors for elevator recall and HVAC shutdown are permitted to initiate a supervisory signal under some conditions.

EXHIBIT 14.21

Functional Testing of Smoke Detector. (Courtesy of Jeffrey Moore, P.E., JENSEN HUGHES)

17(7)(b).

Paragraph 23.8.3.2 permits the connection of dwelling unit smoke alarms to a protected premises fire alarm system, provided the smoke alarm signal is treated as a supervisory signal. Paragraph 23.8.3.5 prohibits the operation of any test switch or an automatic alarm condition from causing an alarm condition at the protected premises fire alarm system. Where these smoke alarms are connected to the protected premises fire alarm system, a functional test must be performed to demonstrate that the correct signal is received.

17(7)(c).

Smoke detectors used in one- and two-family dwellings must be functionally tested per the manufacturer's instructions. However, they are not required to include a smoke entry test or a sensitivity test unless specifically required by the manufacturer.

Δ ***TABLE 14.4.3.2*** *Continued*

Component	*Initial Acceptance*	*Periodic Frequency*	*Method*
(e) Duct type	X	Annually	In addition to the testing required in Table 14.4.3.2(g)(1) and Table 14.4.3.2(h), test duct smoke detectors that use sampling tubes to ensure that they will properly sample the airstream in the duct using a method acceptable to the manufacturer or in accordance with their published instructions.
(f) Projected beam type	X	Annually	Test the detector by introducing smoke, other aerosol, or an optical filter into the beam path.
(g) Smoke detector with built-in thermal element	X	Annually	Operate both portions of the detector independently as described for the respective devices.
(h) Smoke detectors with control output functions	X	Annually	Verify that the control capability remains operable even if all of the initiating devices connected to the same initiating device circuit or signaling line circuit are in an alarm state.
(8) Smoke detectors — sensitivity testing			
In other than one- and two-family dwellings, system detectors	N/A	See 14.4.4.3	[m]Perform any of the following tests to ensure that each smoke detector is within its listed and marked sensitivity range: (1) Calibrated test method (2) Manufacturer's calibrated sensitivity test instrument (3) Listed control equipment arranged for the purpose (4) Smoke detector/control unit arrangement whereby the detector causes a signal at the control unit when its sensitivity is outside its listed sensitivity range (5) Other calibrated sensitivity test method approved by the authority having jurisdiction

(continues)

Table Commentary

17(7)(e).

Test duct smoke detectors to confirm proper operation of the detector. Tests are required to ensure that the duct smoke detector samples the airstream. This is typically accomplished using a manometer or other instrument to measure the air pressure differential across the inlet and return tubes with the HVAC system operating. The measured values are then compared to the minimum air pressure differential information provided by the duct detector manufacturer. Exhibit 14.22 shows a duct detector being tested with a manometer.

EXHIBIT 14.22

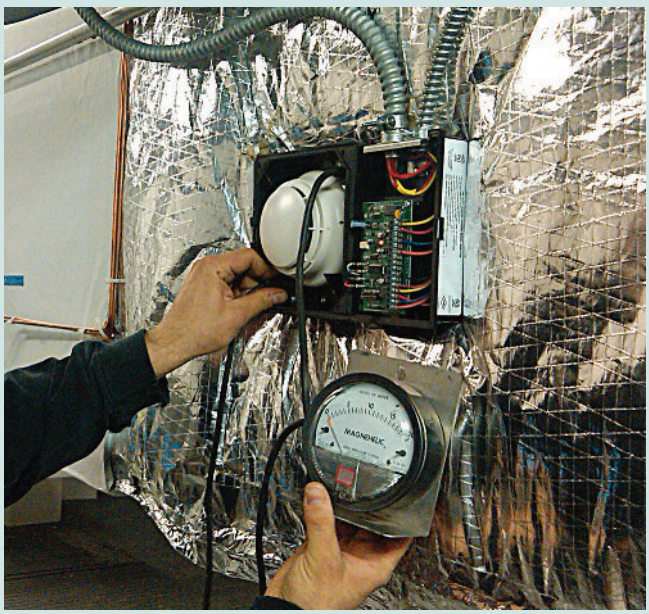

Duct Detector Installation Being Tested with a Manometer. (Courtesy of Warren Olsen, FSCI, Elgin, IL)

17(7)(g).

It is required to test of both portions of a combination unit if possible. The issue of the failure of one feature or the other is not explicitly addressed, but it would be prudent to replace the unit if either the smoke detection or heat detection portion of the device fails the test. Refer to Table 14.4.3.2, Item 17(12), for additional testing methods required for multi-sensor, multi-criteria, and combination detectors.

17(7)(h).

The required test method is used to verify the output to an emergency control function actuated by a smoke detector on an initiating device circuit, even if all other devices on the circuit activate. For example, a smoke detector on an initiating device circuit might be used to initiate elevator recall. The detector initiating the recall signal must be capable of operation even if all other devices on the circuit activate simultaneously. If a circuit-powered smoke detector tries to activate after a manual fire alarm box on the same circuit has activated, the smoke detector might not activate. When used for control functions, smoke detectors installed on initiating device circuits should be powered separately to permit simultaneous operation of all devices on the circuit without loss of control capability. See 21.3.4 and related commentary for more detailed information.

17(8).

The permitted means of testing smoke detector sensitivity are listed. Each of the five options provides a measured means of determining sensitivity.

NFPA 720

Δ ***TABLE 14.4.3.2*** *Continued*

Component	*Initial Acceptance*	*Periodic Frequency*	*Method*
(9) Carbon monoxide detectors/carbon monoxide alarms			
(a) CO entry test	X	Annually	Test the devices in place to ensure CO entry to the sensing chamber by introduction through the vents, to the sensing chamber of listed and labeled product acceptable to the manufacturer or in accordance with manufacturer's published instructions
(b) Air sampling	X	Annually	Per test methods documented in the manufacturer's published instructions, verify detector alarm response through the end sampling port on each pipe run; verify airflow through all other ports as well.
(c) Duct type	X	Annually	Test or inspect air duct detectors to ensure that the device will sample the airstream in accordance with the manufacturer's published instructions.
(d) CO detector with control output functions	X	Annually	Within each protected space, verify that the control capability remains operable even if all of the initiating devices connected to the same initiating device circuit or signaling line circuit are in an alarm state.
(10) Initiating devices, supervisory			
(a) Control valve switch	X	Semiannual	Operate valve and verify signal receipt to be within the first two revolutions of the handwheel or within one-fifth of the travel distance, or per the manufacturer's published instructions. Continue to cycle outside stem and yoke valves and verify switch does not reset during full travel of the valve stem.
(b) High- or low-air pressure switch	X	Annually	Operate switch and verify receipt of signal is obtained where the required pressure is increased or decreased a maximum 10 psi (70 kPa) from the required pressure level.
(c) Steam pressure	X	Annually	Operate switch and verify receipt of signal is obtained before pressure decreases to 110 percent of the minimum operating pressure of the steam-operated equipment.
(d) Pressure supervisory devices for other sources	X	Annually	Operate switch and verify receipt of signal is obtained where the required pressure is increased or decreased from the normal operating pressure by an amount specified in approved design documents.
(e) Room temperature switch	X	Annually	Operate switch and verify receipt of signal to indicate the decrease in room temperature to 40°F (4.4°C) and its restoration to above 40°F (4.4°C).
(f) Water level switch	X	Annually	Operate switch and verify receipt of signal indicating the water level raised or lowered a maximum 3 in. (70 mm) from the required level within a pressure tank, or a maximum 12 in. (300 mm) from the required level of a nonpressure tank. Also verify its restoral to required level.
(g) Water temperature switch	X	Annually	Operate switch and verify receipt of signal to indicate the decrease in water temperature to 40°F (4.4°C) and its restoration to above 40°F (4.4°C).

(continues)

Table Commentary

17(9).

These carbon monoxide (CO) detectors/alarms detect CO emissions. Such detectors must be functionally tested for CO entry into the device. These are not the same devices used to detect CO for toxicity/life safety. These devices are required to be tested as described in 17(9)(a) through 17(9)(d). The test requirements are very similar to those for a smoke detector.

17(10)(b).

High- or low-air pressure switches are typically installed to supervise the air pressure in dry pipe sprinkler systems, in some types of preaction sprinkler systems, and in pressure tanks installed as part of a fire protection water supply.

Δ ***TABLE 14.4.3.2*** *Continued*

Component	*Initial Acceptance*	*Periodic Frequency*	*Method*
(11) Mechanical, electrosonic, or pressure-type waterflow device	X	Semiannually	Water shall be flowed through an inspector's test connection indicating the flow of water equal to that from a single sprinkler of the smallest orifice size installed in the system or other listed and approved waterflow switch test methods for wet-pipe systems, or an alarm test bypass connection for dry-pipe, pre-action, or deluge systems in accordance with NFPA 25.
(12) Multi-sensor fire detector or multi-criteria fire detector or combination fire detector	X	Annually	Test each of the detection principles present within the detector (e.g., smoke/heat/CO, etc.) independently for the specific detection principle, regardless of the configuration status at the time of testing. Also test each detector in accordance with the manufacturer's published instructions. Test individual sensors together if the technology allows individual sensor responses to be verified. Perform tests as described for the respective devices by introduction of the physical phenomena to the sensing chamber of element. An electronic check (magnets, analog values, etc.) is not sufficient to comply with this requirement. Verify by using the detector manufacturer's published instructions that the test gas used will not impair the operation of either sensing chamber of a multisensor, multicriteria, or combination fire detector. Confirm the result of each sensor test through indication at the detector or control unit. Where individual sensors cannot be tested individually, test the primary sensor.[n] Record all tests and results.
18. Special hazard equipment			
(1) Abort switch (dead-man type)	X	Annually	Operate abort switch and verify correct sequence and operation.
(2) Abort switch (recycle type)	X	Annually	Operate abort switch and verify development of correct matrix with each sensor operated.
(3) Abort switch (special type)	X	Annually	Operate abort switch and verify correct sequence and operation in accordance with authority having jurisdiction. Observe sequencing as specified on as-built drawings or in system owner's manual.
(4) Cross-zone detection circuit	X	Annually	Operate one sensor or detector on each zone. Verify occurrence of correct sequence with operation of first zone and then with operation of second zone.
(5) Matrix-type circuit	X	Annually	Operate all sensors in system. Verify development of correct matrix with each sensor operated.
(6) Release solenoid circuit[o]	X	Annually	Verify operation of solenoid.
(7) Squibb release circuit	X	Annually	Use AGI flashbulb or other test light approved by the manufacturer. Verify operation of flashbulb or light.
(8) Verified, sequential, or counting zone circuit	X	Annually	Operate required sensors at a minimum of four locations in circuit. Verify correct sequence with both the first and second detector in alarm.

(continues)

Table Commentary

17(11).

The preferred means of testing a waterflow switch is to flow water past the flow switch by opening a test connection that simulates the flow of a single sprinkler head of the smallest orifice size installed in the sprinkler system. However, due to restrictions on the use of water, environmental concerns, or jurisdictional licensing requirements, personnel conducting fire alarm system testing may not be permitted to use the sprinkler system test valves to flow water. Thus, testing of the waterflow switch by flowing water may best be handled through coordination with the testing performed for compliance with NFPA 25.

17(12).

These methods expand on those contained in Item 17(7)(g). Refer to the definitions of the terms *combination*, *multi-criteria,* and *multi-sensor* detectors in 3.3.70.4, 3.3.70.12, and 3.3.70.13, respectively. These test methods apply to all three types of detectors. These requirements verify sensor performance independently by actuating each sensor incorporated into the detector. For example, a detector that requires sensing both smoke and CO to activate would be tested such that both smoke and CO are present to ensure that the detector activates as expected.

Testing combination detectors requires that each sensing mechanism be tested. The heat detection portion is tested in accordance with the requirements for heat detectors. The smoke detection portion is tested in accordance with the requirements for smoke detectors. Also refer to the manufacturer's published instructions.

Exhibit 14.23 shows a multi-criteria (smoke, heat, and CO) detector tester.

EXHIBIT 14.23

Multi-Criteria Detector Tester. (Courtesy of SDi, LLC, Neptune, NJ)

18(5).

A priority matrix is an alternative to cross-zoned detectors. Instead of two separate initiating device (i.e., detection) circuits that require a detector on each circuit to activate to initiate a function, such as suppression system discharge, the priority matrix is used with addressable systems programmed to actuate a function whenever two or more addressable devices are activated. The testing requirement is to ensure that all possible combinations of detectors actuate the function. For example, if there were four detectors in the space, then each possible detector combination would have to be tested to ensure correct system response. As the number of detectors in the space increases, the possible combination of detectors that could activate should be reviewed to determine the number of tests required to ensure proper system operation. For example, if the space contains 50 detectors, there would be several thousand possible combinations of two detectors. However, it would be unlikely that the only two detectors to active in a given scenario would be the two detectors most remote from each other so that combination might not need be tested.

Δ ***TABLE 14.4.3.2*** *Continued*

Component	*Initial Acceptance*	*Periodic Frequency*	*Method*
(9) All above devices or circuits or combinations thereof	X	Annually	Verify supervision of circuits by creating an open circuit.
19. Combination systems			
(1) Fire extinguisher electronic monitoring device/system	X	Annually	Test communication between the device connecting the fire extinguisher electronic monitoring device/system and the fire alarm control unit to ensure proper signals are received at the fire alarm control unit and remote annunciator(s) if applicable.
(2) Carbon monoxide device/system	X	Annually	Test communication between the device connecting the carbon monoxide device/system and the fire alarm control unit to ensure proper signals are received at the fire alarm control unit and remote annunciator(s) if applicable.
20. Interface equipment[p]	X	See 14.4.4.4	Test interface equipment connections by operating or simulating the equipment being supervised. Verify signals required to be transmitted are received at the control unit. Test frequency for interface equipment is the same as the frequency required by the applicable NFPA standard(s) for the equipment being supervised.
21. Guard's tour equipment	X	Annually	Test the device in accordance with the manufacturer's published instructions.

(continues)

Table Commentary

18(9).

These tests are intended for fire alarm or signaling systems that actuate a special hazard fire suppression system such as a clean agent or carbon dioxide system. Testing these functions is not the aim of the Code, unless the fire alarm or signaling system being tested actuates the suppression system. In many cases, these tests will apply to a releasing system fire alarm system that reports to the building fire alarm system. When testing a fire alarm system that actuates a special hazard fire suppression system, the test plan required by 14.2.10 should detail the procedures to be used to prevent accidental operation of the suppression system. The manufacturer's test procedures should always be reviewed before conducting any tests. These procedures often involve isolating or impairing the suppression system during the tests. Proper impairment handling procedures must be observed, and care must be taken to confirm full restoration of the system at the conclusion of testing. After all equipment has been tested independently, all connections or test switches must be returned to their normal positions. Also refer to the requirements in 14.2.6 and its related commentary.

The requirements of Chapter 14 do not apply directly to special hazard fire suppression systems. The inspection, testing, and maintenance of these systems are covered by the specific code or standard that apply to the system. For example, the inspection, testing, and maintenance of a clean agent fire suppression system are covered by NFPA 2001. However, 4.3.1.1 of NFPA 2001, 2018 edition, states, "Detection, actuation, alarm, and control systems shall be installed, tested, and maintained in accordance with appropriate NFPA protective signaling systems standards." *NFPA 72* is the applicable signaling systems standard, so these requirements apply by reference from the suppression system standard.

20.

The signals being verified include the status (i.e., alarm, supervisory, and trouble conditions) of the interfaced equipment. Examples of interfaced equipment include special hazards fire suppression control units, power availability to an elevator shunt trip relay, a preaction sprinkler system control unit, or a smoke control system.

Δ ***TABLE 14.4.3.2*** *Continued*

Component	*Initial Acceptance*	*Periodic Frequency*	*Method*
22. Alarm notification appliances			
(1) Audible[q]	X	N/A	For initial and reacceptance testing, measure sound pressure levels for signals with a sound level meter meeting ANSI S1.4a, *Specifications for Sound Level Meters*, Type 2 requirements. Measure sound pressure levels throughout the protected area to confirm that they are in compliance with Chapter 18. Set the sound level meter in accordance with ANSI/ASA S3.41, *American National Standard Audible Emergency Evacuation (E2) and Evacuation Signals with Relocation Instructions (ESRI),* using the time-weighted characteristic F (FAST).
	N/A	Annually	[r]For periodic testing, verify the operation of the notification appliances.

(continues)

Table Commentary

22(1).

During initial and reacceptance testing, sound pressure level measurements are required throughout the protected area. However, with careful planning, the number of test locations can be minimized by selection of worst-case locations. With the approval of the authority having jurisdiction, areas that are physically remote from the audible notification appliances are selected as worst-case locations to measure and record sound pressure levels. If these areas comply with Code requirements, then the authority having jurisdiction may deem further measurements unnecessary.

Areas failing to meet the requirements of Section 18.4 generally require changes in the output tap settings of audible notification appliances or the provision of additional appliances to meet the required sound pressure levels. Only the audible evacuation signal or alert signal is used to evaluate audibility (sound pressure level). Sound pressure levels for compliance with *NFPA 72* are not measured using a voice message. In systems using multiple alert tones, it might be necessary to conduct at least one test using each tone to ensure that all tones produce the same relative sound pressure level. Different signals (tones) from a system using horns to produce different tones or signals will not likely vary in sound pressure level. Systems using loudspeakers to reproduce tones could vary in sound pressure level output due to differences in the volume of the tones as programmed in the control unit software. A check of the sound pressure level from each tone as measured in a single location should show whether there are any significant differences in the sound pressure level produced by different tones. The measurement of the audibility of voice messages is not required.

Sound pressure level meters used to test audible notification appliances should be set to the "FAST" response time on the "A" weighted scale (i.e., dBA). Testing with the meter set to slow would damp out noise but would also affect measurements of time by varying sounds such as the temporal patterns used for fire alarm and CO alarms. Document the maximum sound pressure level taken at each measurement location. Note that the maximum is the highest root-mean-square (RMS) reading of the meter and not the peak. This is similar to measuring alternating current voltage. The meter might have a "max hold" or "peak hold" to save the highest reading. Check the meter documentation to determine if it is saving the highest RMS value or the highest true waveform peak value.

FAQ

Are measurements of sound pressure levels required throughout the building for periodic testing?

After initial acceptance testing, it is only necessary to verify the operation of notification appliances. However, where areas are affected by building, system, or occupancy changes, measuring sound pressure levels should be considered to ensure audibility has not been adversely affected. These areas should be evident during the visual inspection required throughout the building. As specified in 14.3.5, the visual inspections are intended to make certain that no changes have been made that will affect equipment performance adversely. Building modifications triggering consideration for additional sound pressure level measurements might include areas where the occupancy changed, renovated or remodeled areas, and areas where new equipment or processes have increased the ambient or peak sound pressure levels.

Δ ***TABLE 14.4.3.2*** *Continued*

Component	*Initial Acceptance*	*Periodic Frequency*	*Method*
(2) Audible textual notification appliances (loudspeakers and other appliances to convey voice messages)	X	N/A	For initial and reacceptance testing, measure sound pressure levels for signals with a sound level meter meeting ANSI S1.4a, *Specifications for Sound Level Meters*, Type 2 requirements. Measure sound pressure levels throughout the protected area to confirm that they are in compliance with Chapter 18. Set the sound level meter in accordance with ANSI/ASA S3.41, *American National Standard Audible Emergency Evacuation (E2) and Evacuation Signals with Relocation Instructions (ESRI)*, using the time-weighted characteristic F (FAST). Verify audible information to be intelligible and in compliance with 14.4.11.
	N/A	Annually	[r]For periodic testing, verify the operation of the notification appliances.
(3) Visual	X	N/A	Perform initial and reacceptance testing in accordance with the manufacturer's published instructions. Verify appliance locations to be per approved layout and confirm that no floor plan changes affect the approved layout. Verify the candela rating or method of candela control marking on each visual appliance and rating when reported by the FACU agrees with the approved drawings. Confirm that each appliance flashes.
	N/A	Annually	For periodic testing, verify that each appliance flashes.
23. Exit marking audible notification appliance	X	Annually	Perform tests in accordance with manufacturer's published instructions.
24. Emergency control functions[s]	X	Annually	For initial, reacceptance, and periodic testing, verify emergency control function interface device activation. Where an emergency control function interface device is disabled or disconnected during initiating device testing, verify that the disabled or disconnected emergency control function interface device has been properly restored, including electromagnetic devices used for door releasing services as part of a fire alarm system.

(continues)

Table Commentary

22(2).

These test methods address both the signals produced by audible textual notification appliances (loudspeakers) and the intelligibility of voice messages produced by these appliances. Requirements for the measurement of sound pressure levels for signals are similar to those in Item 22(1).

Audible information must be verified as distinguishable, understandable, and in compliance with 14.4.11 and 18.4.11 (by reference). Quantitative measurements to determine intelligibility is neither a requirement nor a goal. (See the commentary following A.14.4.11.) Voice messages are required to be verified only as distinguishable and understandable and permitting qualitative assessment — a simple listen test. In some cases, it may be acceptable to ensure that the voice messages broadcast over the loudspeakers in a fire alarm or ECS are intelligible (understandable) to the building occupants. Voice intelligibility requirements in 18.4.11 are specified using the term *acoustically distinguishable space (ADS)*, defined in 3.3.6. Only those spaces requiring voice intelligibility need to be verified as distinguishable and understandable.

An important concept is that the sound pressure level measurements required apply to signals (evacuations signals and alert tones). The measurement of sound pressure levels for voice messages is not required (see 18.4.1.6), although it may be done in conjunction with measurements for intelligibility. It is required that intelligibility be verified but it is not required that the verification be specifically confirmed by testing (intelligibility measurements). Subjective verification (listening) may be sufficient in many situations. Designers, owners, and authorities having jurisdiction have to decide when and where testing is desirable, if at all.

For periodic testing, verification of notification appliance operation is required. Changes in occupancy, the building, or the system may affect the audibility of signals and the intelligibility of voice messages. It is important to verify that audibility and intelligibility have not been adversely affected. See the related commentary following Item 22(1). Compliance with the requirement for voice intelligibility begins with the system design. To comply with requirements for audibility and intelligibility, many installers attempt to tap loudspeakers at a higher wattage rather than increase the number of loudspeakers in an area. This incorrect approach to sound level compliance leads to distortion of voice messages through the loudspeakers. Refer to 18.4.11, 24.4.2, the related Annex A material, and Annex D. Also refer to "Voice Intelligibility for Emergency Voice/Alarm Communications Systems" at the end of Annex D in this handbook.

22(3).

Acceptance tests must ensure that visual notification appliances operate and that the marked candela rating agrees with the approved drawings. Periodic tests require only verification that each appliance operates. The visual inspection required by 14.3.1 includes verification that the visual appliance is not blocked by shelving, furniture, ceiling-mounted light fixtures, movable partitions, or other obstructions.

24.

The Code generally uses the term *emergency control functions* to refer to fire safety functions, as well as other non-fire–related control functions that may apply in ECSs as well. Refer to the definition of *emergency control functions* in 3.3.94. Emergency control functions might include control of elevators, HVAC systems, door closures, and other functions initiated by the protective signaling system during an emergency.

Δ ***TABLE 14.4.3.2*** *Continued*

Component	*Initial Acceptance*	*Periodic Frequency*	*Method*
25. Two-way emergency communications systems	X	Annually	Use the manufacturer's published instructions and the as-built drawings provided by the system supplier to verify correct operation after the initial testing phase has been performed by the supplier or by the supplier's designated representative. Test the two-way communication system to verify operation and receipt of visual and audible signals at the transmitting unit and the receiving unit, respectively. Operate systems with more than five stations with a minimum of five stations operating simultaneously. Verify voice quality and clarity. Verify directions for the use of the two-way communication system, instructions for summoning assistance via the two-way communication system, and written identification of the location is posted adjacent to the two-way communication system. Verify that all remote stations are readily accessible. Verify the timed automatic communications capability to connect with a constantly attended monitoring location per 24.5.3.4.
26. Special procedures			
(1) Alarm verification	X	Annually	Verify time delay and alarm response for smoke detector circuits identified as having alarm verification.
(2) Multiplex systems	X	Annually	Verify communications between sending and receiving units under both primary and secondary power. Verify communications between sending and receiving units under open-circuit and short-circuit trouble conditions. Verify communications between sending and receiving units in all directions where multiple communications pathways are provided. If redundant central control equipment is provided, verify switchover and all required functions and operations of secondary control equipment. Verify all system functions and features in accordance with manufacturer's published instructions.
27. Supervising station alarm systems — receiving equipment			
(1) All equipment	X	Monthly	Perform tests on all system functions and features in accordance with the equipment manufacturer's published instructions for correct operation in conformance with the applicable sections of Chapter 26. Actuate initiating device and verify receipt of the correct initiating device signal at the supervising station within 90 seconds. Upon completion of the test, restore the system to its functional operating condition. If test jacks are used, perform the first and last tests without the use of the test jack.

(continues)

Table Commentary

25.

Area of refuge systems are installed to permit occupants requiring assistance in an emergency, such as someone with a physical disability, to communicate with emergency personnel. The system must be tested to ensure initiation of audible and visual signals at the receiving unit, and that voice communications are clear. Exhibit 14.24 shows an example of an area of refuge station used to communicate with emergency personnel.

EXHIBIT 14.24

Area of Refuge Station Used for Emergency Communications. (Courtesy of Housing Devices, Inc., Medford, MA)

26(1).

To reduce the time required for testing circuits or devices equipped with alarm verification, the alarm verification feature may be disabled at the start of testing and re-enabled after the final test. If this procedure is used, all circuits equipped with alarm verification must be tested again to ensure that the alarm verification feature is operable. Note that 23.8.5.4.1 permits alarm verification only for smoke detectors.

26(2).

The performance of circuits and pathways should be verified in accordance with the circuit designations (classes as defined by Chapter 12), as well as the requirements of the control unit manufacturer. The authority having jurisdiction requires testing to meet the minimum requirements of the Code; however, it is possible that the system design exceeds minimum requirements. All system devices and functions installed should be verified for proper operation. The authority having jurisdiction might not witness testing of all installed devices and functions, but the installation contractor is responsible for testing the entire system and confirming proper operation in accordance with the design documents.

Δ ***TABLE 14.4.3.2*** *Continued*

Component	*Initial Acceptance*	*Periodic Frequency*	*Method*
(2) Digital alarm communicator receiver (DACR)	X	Monthly	Disconnect each transmission means in turn from the DACR, and verify audible and visual annunciation of a trouble signal in the supervising station. Cause a signal to be transmitted on each individual incoming DACR line (path) at least once every 6 hours (24 hours for DACTs installed prior to adoption of the 2013 edition of *NFPA 72*). Verify receipt of these signals.
(3) Digital alarm radio receiver (DARR)	X	Monthly	Cause the following conditions of all DARRs on all subsidiary and repeater station receiving equipment. Verify receipt at the supervising station of correct signals for each of the following conditions: (1) AC power failure of the radio equipment (2) Receiver malfunction (3) Antenna and interconnecting cable failure (4) Indication of automatic switchover of the DARR (5) Data transmission line failure between the DARR and the supervising or subsidiary station
(4) McCulloh systems	X	Monthly	Test and record the current on each circuit at each supervising and subsidiary station under the following conditions: (1) During functional operation (2) On each side of the circuit with the receiving equipment conditioned for an open circuit Cause a single break or ground condition on each transmission channel. If such a fault prevents the functioning of the circuit, verify receipt of a trouble signal. Cause each of the following conditions at each of the supervising or subsidiary stations and all repeater station radio transmitting and receiving equipment; verify receipt of correct signals at the supervising station: (1) RF transmitter in use (radiating) (2) AC power failure supplying the radio equipment (3) RF receiver malfunction (4) Indication of automatic switchover
(5) Radio alarm supervising station receiver (RASSR) and radio alarm repeater station receiver (RARSR)	X	Monthly	Cause each of the following conditions at each of the supervising or subsidiary stations and all repeater station radio transmitting and receiving equipment; verify receipt of correct signals at the supervising station: (1) AC power failure supplying the radio equipment (2) RF receiver malfunction (3) Indication of automatic switchover, if applicable
(6) Private microwave radio systems	X	Monthly	Cause each of the following conditions at each of the supervising or subsidiary stations and all repeater station radio transmitting and receiving equipment; verify receipt of correct signals at the supervising station: (1) RF transmitter in use (radiating) (2) AC power failure supplying the radio equipment (3) RF receiver malfunction (4) Indication of automatic switchover

(continues)

(table continues next page)

Δ ***TABLE 14.4.3.2*** *Continued*

Component	*Initial Acceptance*	*Periodic Frequency*	*Method*
(7) Performance-based technologies	X	Monthly	Perform tests to ensure the monitoring of integrity of the transmission technology and technology path. Where a single communications path is used, disconnect the communication path. Verify that failure of the path is annunciated at the supervising station within 60 minutes of the failure (within 5 minutes for communication equipment installed prior to adoption of the 2013 edition of *NFPA 72*). Restore the communication path. Where multiple communication paths are used, disconnect both communication paths and confirm that failure of the path is annunciated at the supervising station within not more than 6 hours of the failure (within 24 hours for communication equipment installed prior to adoption of the 2013 edition of *NFPA 72*). Restore both communication paths.
28. Public emergency alarm reporting system transmission equipment			
(1) Publicly accessible alarm box	X	Semiannually	Actuate publicly accessible initiating device(s) and verify receipt of not less than three complete rounds of signal impulses. Perform this test under normal circuit conditions. If the device is equipped for open circuit operation (ground return), test it in this condition as one of the semiannual tests.
(2) Auxiliary box	X	Annually	Test each initiating circuit of the auxiliary box by actuation of a protected premises initiating device connected to that circuit. Verify receipt of not less than three complete rounds of signal impulses.
(3) Master box			
(a) Manual operation	X	Semiannually	Perform the tests prescribed for 28(a).
(b) Auxiliary operation	X	Annually	Perform the tests prescribed for 28(b).
29. Low-power radio (wireless systems)	X	N/A	The following procedures describe additional acceptance and reacceptance test methods to verify wireless protection system operation: (1) Use the manufacturer's published instructions and the as-built drawings provided by the system supplier to verify correct operation after the initial testing phase has been performed by the supplier or by the supplier's designated representative. (2) Starting from the functional operating condition, initialize the system in accordance with the manufacturer's published instructions. Confirm the alternative communications path exists between the wireless control unit and peripheral devices used to establish initiation, indication, control, and annunciation. Test the system for both alarm and trouble conditions. (3) Check batteries for all components in the system monthly unless the control unit checks all batteries and all components daily.

(continues)

Table Commentary

29.

This requirement applies only to low-power radio (wireless) systems covered by Section 23.16 and not radio-type public emergency alarm reporting systems.

Δ ***TABLE 14.4.3.2*** *Continued*

Component	*Initial Acceptance*	*Periodic Frequency*	*Method*
30. Mass notification systems			
(1) Functions	X	Annually	At a minimum, test control equipment to verify correct receipt of alarm, supervisory, and trouble signals (inputs); operation of evacuation signals and auxiliary functions (outputs); circuit supervision, including detection of open circuits and ground faults; and power supply supervision for detection of loss of ac power and disconnection of secondary batteries.
(2) Fuses	X	Annually	Verify the rating and supervision.
(3) Interfaced equipment	X	Annually	Verify integrity of single or multiple circuits providing interface between two or more control units. Test interfaced equipment connections by operating or simulating operation of the equipment being supervised. Verify signals required to be transmitted at the control unit.
(4) Lamps and LEDs	X	Annually	Illuminate lamps and LEDs.
(5) Primary (main) power supply	X	Annually	Disconnect all secondary (standby) power and test under maximum load, including all alarm appliances requiring simultaneous operation. Reconnect all secondary (standby) power at end of test. For redundant power supplies, test each separately.
(6) Audible textual notification appliances (loudspeakers and other appliances to convey voice messages)	X	Annually	Measure sound pressure level with a sound level meter meeting ANSI S1.4a, *Specifications for Sound Level Meters*, Type 2 requirements. Measure and record levels throughout protected area. Set the sound level meter in accordance with ANSI/ASA S3.41, *American National Standard Audible Emergency Evacuation Signal*, using the time-weighted characteristic F (FAST). Record the maximum output when the audible emergency evacuation signal is on. Verify audible information to be distinguishable and understandable.

(continues)

Table Commentary

30.

The testing frequencies and methods apply to free-standing MNSs that are not part of a fire alarm system or those that were installed before the adoption of the 2010 Code edition. (Before the 2010 edition, there were no established standards for MNSs.) Where an MNS is integrated with a fire alarm system, test frequencies must comply with the requirements for fire alarm systems.

30(1).

A local operating console (LOC) installed as part of a mass notification or ECS should be tested as part of the control equipment. The buttons visible on the LOC shown in Exhibit 14.25 are used to activate each of the preprogrammed voice messages. This LOC could be limited to eight messages (see 24.3.6.1).

EXHIBIT 14.25

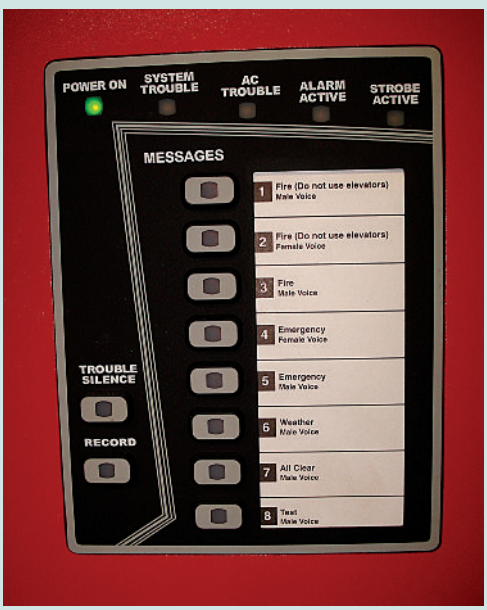

Local Operating Console (LOC) with Preprogrammed Voice Messages. (Courtesy of Jeffrey Moore, P.E., JENSEN HUGHES)

30(6).

Note that the method for textual audible notification appliances (loudspeakers) that are part of a mass notification is essentially the same as for fire alarm systems as described in Item 22(2), except for periodic testing.

Δ ***TABLE 14.4.3.2*** *Continued*

Component	*Initial Acceptance*	*Periodic Frequency*	*Method*
(7) Visual	X	Annually	Perform test in accordance with manufacturer's published instructions. Verify appliance locations to be per approved layout and confirm that no floor plan changes affect the approved layout. Verify the candela rating or method of candela control marking on each visual appliance and rating when reported by the FACU agrees with the approved drawings. Confirm that each appliance flashes.
(8) Control unit functions and no diagnostic failures are indicated	X	Annually	Review event log file and verify that the correct events were logged. Review system diagnostic log file; correct deficiencies noted in file. Delete unneeded log files. Delete unneeded error files. Verify that sufficient free disk space is available. Verify unobstructed flow of cooling air is available. Change/clean filters, cooling fans, and intake vents.
(9) Control unit reset	X	Annually	Power down the central control unit computer and restart it.
(10) Control unit security	X	Annually	If remote control software is loaded onto the system, verify that it is disabled to prevent unauthorized system access.
(11) Audible/visual functional test	X	Annually	Send out an alert to a diverse set of predesignated receiving devices and confirm receipt. Include at least one of each type of receiving device.
(12) Software backup	X	Annually	Make full system software backup. Rotate backups based on accepted practice at site.
(13) Secondary power test	X	Annually	Disconnect ac power. Verify the ac power failure alarm status on central control equipment. With ac power disconnected, verify battery voltage under load.

(continues)

Table Commentary

30(7).

Exhibit 14.26 is an example of a fire alarm and MNS visual notification appliance. The clear lens is for fire alarm notification, and the amber lens is for mass notification functions. If the MNS is combined with the fire alarm system, testing is conducted in accordance with the requirements of the fire alarm system. If the MNS is separate from the fire alarm system, testing is conducted in accordance with the requirements for MNSs.

EXHIBIT 14.26

Combination Fire/Alert Visual Notification Appliance.

Δ ***TABLE 14.4.3.2*** *Continued*

Component	*Initial Acceptance*	*Periodic Frequency*	*Method*
(14) Wireless signals	X	Annually	Check forward/reflected radio power is within specifications.
(15) Antenna	X	Annually	Check forward/reflected radio power is within specifications. Verify solid electrical connections with no observable corrosion.
(16) Transceivers	X	Annually	Verify proper operation and mounting is not compromised.

[a]Some transmission equipment (such as, but not limited to, cable modems, fiber-optic interface nodes, and VoIP interfaces) are typically powered by the building's electrical system using a secondary (standby) power supply that does not meet the requirements of this Code. This is intended to ensure that the testing authority verifies full secondary (standby) power as required by Chapter 10. Additionally, refer to Table 14.4.3.2, items 7 through 9, for secondary (standby) power supply testing.

[b]The automatic transmission of the check-in (handshake) signal can take up to 60 minutes to occur.

[c]See Table 14.4.3.2, Item 4(1) for the testing of transmission equipment.

[d]The battery tests in Table 14.4.3.2 Item 9 are based on VRLA batteries and it is the intent that the tests specified in (1) through (4) be performed in order. For other secondary battery types, refer to the battery manufacturer's published instructions or IEEE 450, *Recommended Practice for Maintenance, Testing, and Replacement of Vented Lead-Acid Batteries for Stationary Applications,* for vented lead-acid batteries, and IEEE 1106, *Recommended Practice for Installation, Maintenance, Testing, and Replacement of Vented Nickel-Cadmium Batteries for Stationary Applications*, for nickel-cadmium batteries.

The battery test methods and procedures in Table 14.4.3.2 have been updated to reflect current industry standards.

[e]Example: 4000 mAh × 1⁄25 = 160 mA charging current at 77°F (25°C).

[f]If the charger is adjustable, adjust the output voltage to 2.265 volts per cell ±0.015 volts at 77°F (25°C) or as specified by the alarm equipment manufacturer.

[g]See A.14.4.3.2 Item 9(4). A load test per Item 9(5) is permitted in lieu of an ohmic test.

[h]See A.14.4.3.2 Item 9(5)

[i]The voltmeter sensitivity has been changed from 1000 ohms per volt to 100 ohms per volt so that the false ground readings (caused by induced voltages) are minimized.

[j]Initiating devices such as smoke detectors used for elevator recall, closing dampers, or releasing doors held in the open position that are permitted by the Code (see *9.6.3 of NFPA 101*) to initiate supervisory signals at the fire alarm control unit (FACU) should be tested at the same frequency (annual) as those devices when they are generating an alarm signal. They are not supervisory devices, but they initiate a supervisory signal at the FACU.

[k]Fusible thermal link detectors are commonly used to close fire doors and fire dampers electrically connected to the fire alarm control unit. They are actuated by the presence of external heat, which causes a solder element in the link to fuse, or by an electric thermal device, which, when energized, generates heat within the body of the link, causing the link to fuse and separate.

[l]Note, it is customary for the manufacturer of the smoke detector to test a particular product from an aerosol provider to determine acceptability for use in smoke entry testing of their smoke detector/smoke alarm. Magnets are not acceptable for smoke entry tests.

[m]There are some detectors that use magnets as a manufacturer's calibrated sensitivity test instrument.

[n]For example, it might not be possible to individually test the heat sensor in a thermally enhanced smoke detector.

[o]Manufacturer's published instructions should be consulted to ensure a proper operational test. No suppression gas or agent is expected to be discharged during the test of the solenoid. See Test Plan of 14.2.10.

[p]A monitor module installed on an interface device is not considered a supervisory device and therefore not subject to the quarterly testing frequency requirement. Test frequencies for interface devices should be in accordance with the applicable standard. For example, fire pump controller alarms such as phase reversal are required to be tested annually. If a monitor module is installed to identify phase reversal on the fire alarm control unit, it is not necessary to test for phase reversal four times a year.

[q]Chapter 18 would require 15 dB over average ambient sound for public mode spaces. Sometimes the ambient sound levels are different from what the design was based upon. Private operating mode would require 10 dB over average ambient at the location of the device.

[r]Where building, system, or occupancy changes have been observed, the owner should be notified of the changes. New devices might need to be installed and tested per the initial acceptance testing criteria.

[s]See A.14.4.3.2 and Table 14.4.3.2, Item 24.

A.14.4.3.2 Table 14.4.3.2 Item 9(4). Ohmic testing is a means to determine the state of health of a VRLA battery's cells by measuring some form of a cell's internal resistance. Typically ohmic testing equipment uses one of three techniques — conductance, impedance, or resistance — to make these measurements.

In simplest technical terms, ohmic technology is based on Ohm's Law, which expresses the relationship between volts, amperes, and ohms in an electrical circuit. Ohmic testing attempts to use voltage and current to determine the resistive characteristic of a battery's cells. As the cells in a battery age and start to lose capacity, the internal components of the battery are undergoing a degradation process. The degradation of these components (plates, grids, internal connection straps) within the battery's cells causes an increased resistance in the conduction paths of the cell, which in turn causes a change in the internal ohmic values. A measured increase in impedance or resistance, or a decrease in conductance, indicates the battery is losing its ability to produce the energy it was designed to deliver when called upon to support the connected loads.

The key to effective application of ohmic testing is the appropriate trending of test results over time compared to a baseline or reference value. Studies have demonstrated that an individual battery produces a unique ohmic "signature" and the use of ohmic testing equipment to trend changes in this signature from installation through the life of the battery is the most effective use of the technology. A program that involves ohmic testing on a regular interval to note changes in the battery is a good maintenance practice.

An ohmic baseline reference value is a benchmark value based on data collected from known good batteries. Reference values can be determined from site-specific measurement, or from testing a sample of new healthy batteries, or by using a generic baseline value to get started.

(1) The best baseline is one established on the installed battery within three to six months after installation and trend accordingly using good record keeping. Ideally the individual ohmic value should be measured at installation and again after the battery has been on float charge for at least 72 hours in order for it to reach a high state of stabilization. These initial "site-specific" values should be recorded and permanently affixed to the battery as a baseline for subsequent tests over the life of the battery. The ohmic value will typically increase for conductance and decrease for resistance and impedance between the initial installation and after being on float-charge for 90 to 180 days (10 percent to 15 percent depending on battery type and size). Six months after installation measure and compare the ohmic readings to the readings taken at installation. Use whichever value is greater for conductance or lower for resistance and impedance as the baseline for that particular battery at that site going forward.

(2) A sample of new healthy batteries in a fully charged state can be tested to obtain a baseline value representative of a new battery. A sample size of at least 30 batteries from one manufacturer with the same make, model, amp-hour rating, age (within 6 months), and manufacturing lot is recommended. Record the following information for the batteries:

(a) Battery manufacturer
(b) Model number
(c) Date of manufacture
(d) Manufacturing lot number (if available)
(e) Battery temperature
(f) Whether or not the battery has had a freshening charge
(g) Battery voltage
(h) Ohmic test value
(i) Calculate the average ohmic value of the batteries. Do not include batteries that deviate more than 30 percent from the average because they could be outside of an acceptable range. Use the average value as a baseline starting point for this model battery.

(3) A generic baseline value for a specific battery model can often be found by contacting the ohmic test equipment manufacturer or from the battery manufacturer. While it is important to note that the use of generic reference values might not be as accurate, it is still possible to identify grossly failed batteries and significant changes in battery condition by applying this method. Generic baseline values are typical averages to be used as general guidelines and should only be used when no other data is available. When testing older batteries for which no initial site-specific ohmic value is available, reference values can be obtained in the following ways:

(a) Contact the equipment or battery manufacturer for assistance.
(b) Consult your company documentation to see if reference values were created for the battery you are testing.
(c) Using ohmic readings of recently installed batteries of the same manufacturer and model of the battery, manufacturer and model of the alarm panel/system, charging circuit, and temperature at time of measurements, calculate the average ohmic value of the best 8 to 10 batteries and use this value as a baseline reference.

As a battery ages and loses capacity, the internal ohmic values change. Although the change might not be perfectly consistent over all battery models and sizes, experience and extensive test data shows that a deviation of ohmic values from the established baseline by 30 percent or more for conductance and 40 percent or more for resistance or impedance indicates that the actual battery capacity has dropped to 80 percent or lower. (For lead-acid batteries, capacity drops off rapidly once the 80 percent capacity point is reached in the lifetime curve, so this is known as the "knee" of the capacity vs. lifetime curve). This 80 percent capacity is the level at which battery manufacturers recommend battery replacement. Figure A.14.4.3.2 illustrates an ohmic trend of a 5-year design life battery with an actual expected service life of 3 years. Note that while battery Unit #1 still has good ohmic readings, semiannual measurements show Unit #2 failing prematurely. For this case, it is desirable to replace both units at the same time. If one unit fails at 2 1⁄2 years, it is likely the second unit will fail in one of the next semiannual tests. Full replacement ensures that all units will "float" together. One exception might be when a unit fails in the first year.

Ohmic testing can be a safe, simple, accurate, and reliable means of determining the state of health of VRLA batteries. It is important however to understand the following basic guidelines in order to maximize the benefits and avoid possible misleading test results:

(1) Follow safety regulations: wear eye protection and remove metal jewelry, and so forth prior to working with batteries.
(2) Conduct a visual inspection prior to testing. A cracked case, leaking terminal or post, or bulging battery should be replaced, not tested.
(3) Temperature changes affect measured ohmic values and battery capacity. Ohmic measurements should be taken at 77°F (25°C) ± 13°F (7°C).
(4) For maximum accuracy and consistency, batteries should be tested when in a fully charged state.
(5) Check the battery charging current prior to test. The charging current should be stable and be within the normal float current recommendations of the battery manufacturer for the battery model. If it is not, it is likely that the batteries have recently been discharged and a test is not appropriate until this float current stabilizes.
(6) Whenever possible, ohmic readings should be taken each time with the same instrument, but as a minimum with the same model. Changing models will skew the data and require re-establishing the baseline.
(7) When test equipment is provided with an alert, set the ohmic baseline and/or thresholds prior to beginning the test to provide an indication of any deviations from baseline.

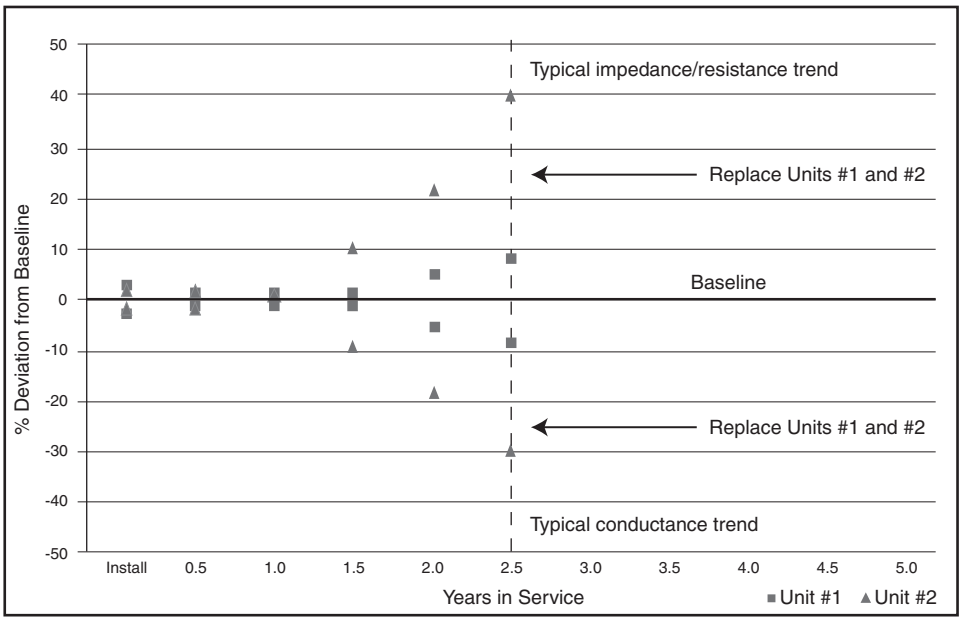

N ***FIGURE A.14.4.3.2*** *Example Ohmic Trend Analysis for a 24-Volt Battery Made Up of Two 12-Volt Units.*

(8) It is essential to take ohmic measurements at the battery terminal or post. For consistency and accuracy, subsequent tests should always have probes or clamps placed at the same point while avoiding battery hardware such as bolt heads or washers. Connecting on the hardware will influence the readings and could cause replacement of a healthy battery.

(9) Maintain good contact at the test point for the duration of the test. If the probe or clamp slips off during the test, an incorrect reading will result.

(10) For batteries with fully insulated quick disconnect connectors, the battery should be taken offline by removing the quick disconnects from the battery terminals and then measuring and recording the internal ohmic value of the battery.

(11) Do not condemn a battery based upon results of a single test without any trending data or an established baseline for that specific battery.

(12) When one or more units in a battery falls outside the acceptable range from baseline, replace the entire string.

(13) A battery tested online can display a different value than when tested offline due to the charger circuit and load being across the battery. Always test the same way, either online or offline, to have consistent and meaningful results. When ohmic testing is performed online, a change in current occurs due to the ohmic test set signal that could impact battery voltage readings. Because battery float voltage is directly tied to float current, the sum of the voltages of each battery cell/unit have to equal the charger float voltage of the battery string. If a load is applied from the ohmic test set that depresses one cell/unit, then the others have to rise somewhat to offset it. As ohmic testing progresses through the battery string, each cell/unit gets pulled down by the ohmic test set somewhat, and the charger must boost the string current to maintain the voltage, raising the voltage of the cells/units that have not yet been tested. For this reason, voltage readings should be taken with a voltmeter prior to performing ohmic testing online.

Table 14.4.3.2 Item 9(5). Battery capacity is determined by the mass of active material contained in the battery and is a measure of the battery's stored energy. The rated capacity of small VRLA batteries used in fire alarm and signaling system applications is typically measured in ampere-hours (Ah) where the ampere-hour rating is based on the battery's capability to provide a constant current at the nominal battery voltage for 20 hours. The rated capacity might vary from manufacturer to manufacturer.

The *actual* battery capacity during service life, often referred to as the state of charge (SOC), can vary significantly from *rated* capacity due to aging, charge and discharge cycles, temperature, and other factors. The unique failure modes of VRLA batteries due to aging and internal degradation are attributed for a high failure rate where the *actual* battery capacity has degraded to 80 percent of the manufacturer's *rated* capacity. As a result, battery manufacturers often recommend replacement much sooner than the rated design life for critical systems.

A test of battery capacity is designed to determine if the battery is capable of continuing to deliver the voltage level specified by the manufacturer. The results of a capacity test can also be used to estimate where the battery is in its service life. A test of capacity is performed by applying a constant current load to the battery based on the manufacturer's published discharge rates until voltage falls to specified levels. Although discharging the battery for capacity testing concerns some, VRLA batteries are designed to handle numerous discharges within the limits established by the battery manufacturer.

The discharge rate selected for testing should be representative of the battery duty cycle. At shorter test times, the test duration has a greater effect on the capacity calculation. For example, a 1-minute difference in actual test time for a 5-minute discharge rate compared to a 3-hour discharge rate will result in a greater deviation of the calculated capacity. The battery is also operating less efficiently at shorter discharge rates and the effects of aging and degradation might not be as prevalent during shorter discharges.

Fire alarm and signaling system loading is typically insufficient for the practical application of a battery load test because the system load cannot be varied to maintain a constant current equal to the battery manufacturer's published discharge rates. The fixed load applied by the system will result in final voltage levels that are deceptively high. Battery sizing is also a factor. The calculated system loads for the battery duty cycle (e.g., 24 hours standby followed by 5 minutes in an alarm) will rarely align with published discharge rates necessary for load testing. In many applications where the battery size is large in comparison to the required system current, the system loading could be too small to accurately determine battery capacity. In these cases, a battery near failure could conceivably satisfy the low discharge rate applied by the fire alarm or signaling system.

In order to satisfy the load test requirements of Table 14.4.3.2, battery capacity testing can be performed in the following manner or in accordance with other methods such as those identified in IEEE Std TM 1188, *Recommended Practice for Maintenance, Testing, and Replacement of Valve-Regulated Lead-Acid (VRLA) Batteries for Stationary Applications*:

(1) Referring to the battery manufacturer's specifications, determine the load current for the 3-hour battery rating to the selected end voltage, typically 1.67 volts per cell (10.2 volts for a 12-volt system or 20.4 volts for a 24-volt system).
(2) Record the battery temperature at the negative terminal.
(3) Disconnect the charger and connect a load bank to the battery terminals.
(4) Apply the constant current specified for the 3-hour rate to the battery. Once the constant current is applied, continue the test until the battery terminal voltage decreases to the specified end voltage.
(5) Stop the test when the selected end voltage is reached.
(6) Record the actual test duration in minutes.
(7) Disconnect the load bank and reconnect the charger.
(8) Calculate percent battery capacity as follows:

$\%\ \text{Capacity} = [T_{actual}/(180 \times K_T)] \times 100$

where:

T_{actual} = the test duration in minutes

K_T = the temperature correction factor for the actual battery temperature at the start of the test from Table 14.4.3.2. Additional temperature correction factors can be obtained from IEEE 1188.

(9) Replace the battery if the battery capacity is less than or equal to 80 percent. Replace the battery at the next scheduled test interval if the battery capacity is less than 85 percent.

N ***TABLE A.14.4.3.2*** *Temperature Correction Factors*

Temperature		K_T
°F	(°C)	
65	18.3	0.92
66	18.9	0.927
67	19.4	0.935
68	20	0.942
69	20.6	0.948
70	21.1	0.955
71	21.7	0.96
72	22.2	0.97
73	22.8	0.975
74	23.4	0.98
75	23.9	0.985
76	24.5	0.99
77	25	1
78	25.6	1.002
79	26.1	1.007
80	26.7	1.011
81	27.2	1.017
82	27.8	1.023
83	28.3	1.03
84	28.9	1.035
85	29.4	1.04
86	30	1.045
87	30.6	1.05
88	31.1	1.055
89	31.6	1.06
90	32.2	1.065
95	35	1.09
100	37.8	1.112

As a good practice, a new battery should be fully charged and then load tested following the battery manufacturer's recommendations prior to installation. A new fully charged battery should have a capacity of at least 90 percent.

Table 14.4.3.2, Item 17. Where the manufacturer publishes limits of accuracy for the operation of an initiating device, the test method should verify actuation is within the tolerances provided.

Data sheets and manufacturer's published instructions are part of the information that should be retained for the life of the system. The information is needed for inspection, testing, and maintenance of the fire detection devices over the course of their life cycle.

Table 14.4.3.2 Item 22(1) and 22(2). If, during the course of the periodic test of audible appliances, it is suspected that alarm sound levels could be lower than the required minimum, the system owner or the system owner's designated representative should be notified in writing. Such notification will allow the building owner or designated building representative to determine whether sound pressure level readings should be taken for the area(s) in question.

Table 14.4.3.2, Item 24. The extent of testing of a fire alarm or signaling system, including devices that were not tested, should be documented in accordance with the test plan in 14.2.10. *NFPA 72* does not require testing of an emergency control function, such as elevator recall, but does require testing of the emergency control function interface device, such as the relay powered by the fire alarm or signaling system. Where the emergency control function is not being tested concurrent with the fire alarm or signaling system testing, measurement of the emergency control function interface device output should be verified using the proper test devices. This might require reading or observing the condition of a relay, a voltage measurement, or the use of another type of test instrument. Once testing is complete, verification that any disabled or disconnected interface devices have been restored to normal is essential, and this verification should be documented in the testing results.

Testing of the emergency control functions themselves is outside of the scope of *NFPA 72*. A complete end-to-end test that demonstrates the performance of emergency control functions actuated by the fire alarm or signaling system might be required by some other governing laws, codes, or standards, or the authority having jurisdiction. In that situation, other applicable installation standards and design documents, not *NFPA 72*, would address testing and performance of the emergency control functions. NFPA 4 provides requirements for integrated (end-to-end) system testing.

It is important to note that the appropriate NFPA standard would provide the acceptance criteria for the overall emergency control function operation requirements, including performance and test methods, while *NFPA 72* covers the required performance and testing of the emergency function interface device.

For instance, if an end-to-end test for a building with an engineered smoke control system is required by some other governing laws, codes, standards, or the authority having jurisdiction, the test protocol would have unique criteria for the smoke control system design, and a special inspector would be responsible for the overall operation and performance of the smoke control system in accordance with the appropriate standard (NFPA 92 and NFPA *101*) during the testing, including measuring pressure differentials and ensuring proper fan and damper operation. Refer to the following extract from NFPA *101* on smoke control:

> **9.3.2 System Design.** The engineer of record shall clearly identify the intent of the system, the design method used, the appropriateness of that method used, and the required means of inspecting, testing, and maintaining the system. [***101*:** 9.3.2]
>
> **9.3.3 Acceptance Testing.** Acceptance testing shall be performed by a special inspector in accordance with Section 9.13. [***101*:** 9.3.3]

Even though the fire alarm or signaling system initiating device might actuate the smoke control system, the actual testing of the dampers and fan operation would be as required by the smoke control design and not part of the fire alarm or signaling system.

Other emergency control operation requirements might be as follows: For fan shutdown and smoke damper operation, the fan and damper operations would be in accordance with NFPA 90A and NFPA 105 respectively, and those equipment operations would be verified by those responsible for HVAC systems in combination with the fire alarm system personnel.

Guidance for elevator inspection and testing can be found in ASME A.17.2, *Guide for Inspection of Elevators, Escalators and Moving Walks*. For elevator systems, the recall function, elevator power shutdown, and hat illumination would be done with the elevator mechanics present during the test. This operational test is often accomplished during routine periodic fire alarm testing. For fire door holder and fire shutter release, it would be expected that the emergency control function operation of the doors/shutters would be verified in accordance with NFPA 80 and NFPA *101* during the test. In some cases, the door manufacturer representative might need to be present to reset the equipment.

14.4.3.3 Video image smoke and flame detectors shall be inspected, tested, and maintained in accordance with the manufacturer's published instructions.

14.4.3.4 Gas detectors shall be inspected, tested, and maintained in accordance with manufacturers' published instructions.

Video image smoke and flame detection are addressed in 17.7.7 and 17.8.5. Requirements for gas detection are addressed in Section 17.10. Paragraphs 14.4.3.3 and 14.4.3.4 include requirements for testing this equipment to comply with the manufacturer's published instructions.

N **14.4.3.5 Testing of CO System Detectors.** For all carbon monoxide system detectors installed after January 1, 2012, carbon monoxide tests shall be performed at initial acceptance and annually by the introduction of carbon monoxide into the sensing chamber or element.

FM

NFPA 720

This requirement applies to CO detectors connected to a system. It does not apply to single- or multiple-station CO alarms.

14.4.4* Testing Frequency. Unless otherwise permitted by other sections of this Code, testing shall be performed in accordance with the schedules in Table 14.4.3.2 or more often if required by the authority having jurisdiction.

FM

Table 14.4.3.2 details the required frequency of tests. These occurrences must be observed unless the authority having jurisdiction permits a reduced testing frequency as permitted by 14.4.4.1 or an increased frequency as directed by the authority having jurisdiction.

A.14.4.4 It is suggested that the annual test be conducted in segments so that all devices are tested annually.

The intent of 14.4.4 is to prevent a test from being made at intervals exceeding those allowed by Table 14.4.3.2. Annual tests should be made every 12 months; monthly tests should be made every 30 days, and so forth. For example, it is not acceptable to conduct an annual test in January of year one, and December of year two (23-month frequency), just because Table 14.4.3.2 requires a test once each year. See the definition of *frequency* in 3.3.121 for minimum and maximum time between testing events.

14.4.4.1 Devices or equipment that are inaccessible for safety considerations (e.g., continuous process operations, energized electrical equipment, radiation, and excessive height) shall be permitted to be tested during scheduled shutdowns if approved by the authority having jurisdiction. Extended intervals shall not exceed 18 months.

Personnel conducting inspections often encounter situations that prevent testing of components in locations or areas that pose a significant safety hazard. Such situations might include inside compartments or areas containing radiation hazards, inside electrical equipment, or on the top of a continuous

process structure. This paragraph provides some relief from the testing frequencies in these situations. However, a system component is not exempt from testing simply because it may be inconvenient or difficult to access. In all cases, a reduced testing frequency requires the approval of the authority having jurisdiction.

14.4.4.2 If automatic testing is performed at least weekly by a remotely monitored fire alarm control unit specifically listed for the application, the manual testing frequency shall be permitted to be extended to annually. Table 14.4.3.2 shall apply.

This paragraph is intended to accommodate development of new technologies that test system equipment and components remotely. Currently, the sensitivity of most analog addressable smoke detectors can be tested from the control unit. The control equipment must be specifically listed to perform the remote testing.

14.4.4.3* In other than one- and two-family dwellings, sensitivity of smoke detectors shall be tested in accordance with 14.4.4.3.1 through 14.4.4.3.6.

A.14.4.4.3 Detectors that cause unwanted alarms should be tested at their lower listed range (or at 0.5 percent obscuration if unmarked or unknown). Detectors that actuate at less than this level should be replaced.

14.4.4.3.1 Sensitivity shall be checked within 1 year after installation.

14.4.4.3.2 Sensitivity shall be checked every alternate year thereafter unless otherwise permitted by compliance with 14.4.4.3.3.

14.4.4.3.3 After the second required calibration test, if sensitivity tests indicate that the device has remained within its listed and marked sensitivity range (or 4 percent obscuration light gray smoke, if not marked), the length of time between calibration tests shall be permitted to be extended to a maximum of 5 years.

After two test results in which sensitivity has remained stable, sensitivity testing may be extended to 5-year intervals in recognition of the apparent stability of the detector and the environment in which it is installed. Extending the sensitivity testing frequency requires maintaining detailed records of unwanted alarms that may indicate the detector has drifted outside the acceptable range of sensitivity. Such changes may warrant more frequent testing, or cleaning or replacement of the detector. Exhibit 14.27 illustrates test equipment that can be used for smoke detector sensitivity testing.

Detectors found to be outside their listed and marked sensitivity range must be recalibrated and then retested or replaced in accordance with 14.4.4.3.4 and 14.4.4.3.5. Removal tools can assist maintenance personnel in removal of smoke detectors. See Exhibit 14.28 for an example of a removal tool.

FAQ What sensitivity should be used for old smoke detectors without sensitivity markings?

Detectors manufactured before current standards did not require a sensitivity range to be marked on the product. These detectors typically have a sensitivity in the range of 0.5 percent to 4 percent per foot obscuration using light gray smoke. Sensitivities less than 0.5 percent obscuration per foot may lead to unwanted alarms. Sensitivities over 4 percent per foot may result in detection delays. The manufacturer of the smoke detector can usually provide a recommended level of sensitivity for unmarked smoke detectors.

EXHIBIT 14.27

Test Equipment. (Left) Smoke Detector Sensitivity Tester (Courtesy of SDi, LLC, Neptune, NJ); (Right) A Calibrated Smoke Detector Sensitivity Test Instrument. (Source: Gemini Scientific, Sunnyvale, CA)

EXHIBIT 14.28

Removal Tool Used to Remove Detectors on High Ceilings. (Courtesy of SDi, LLC, Neptune, NJ)

14.4.4.3.3.1 If the frequency is extended, records of nuisance alarms and subsequent trends of these alarms shall be maintained.

14.4.4.3.3.2 In zones or in areas where nuisance alarms show any increase over the previous year, calibration tests shall be performed.

14.4.4.3.4 Unless otherwise permitted by 14.4.4.3.5, smoke detectors found to have a sensitivity outside the listed and marked sensitivity range shall be cleaned and recalibrated or be replaced.

14.4.4.3.5 Smoke detectors listed as field adjustable shall be permitted to either be adjusted within the listed and marked sensitivity range, cleaned, and recalibrated, or be replaced.

14.4.4.3.6 The detector sensitivity shall not be tested or measured using any device that administers an unmeasured concentration of smoke or other aerosol into the detector or smoke alarm.

Available means for sensitivity testing of smoke detectors include the use of manufacturer calibrated test instruments, control equipment listed for the purpose, a smoke detector/control unit arrangement whereby the detector causes a signal at the control unit when its sensitivity is outside the listed range of sensitivity, or other calibrated sensitivity methods approved by the authority having jurisdiction.

14.4.4.4 Test frequency of interfaced equipment shall be the same as specified by the applicable NFPA standards for the equipment being supervised.

Fire detection and alarm equipment installed as part of a special suppression system or dedicated function fire alarm system is tested in accordance with the applicable standard for the system. For example, heat detectors installed to actuate a high-pressure carbon dioxide extinguishing system are covered in NFPA 12.

14.4.4.5 Restorable fixed-temperature, spot-type heat detectors shall be tested in accordance with 14.4.4.5.1 through 14.4.4.5.4.

Accurate record keeping is imperative to ensure that the same detectors are not tested each year and all detectors are tested over the 5-year period. Note that 14.4.4.5 and its subparagraphs apply only to restorable fixed-temperature, spot-type heat detectors. All other heat detectors require annual tests.

14.4.4.5.1 Two or more detectors shall be tested on each initiating circuit annually.

14.4.4.5.2 Different detectors shall be tested each year.

14.4.4.5.3 Test records shall be kept by the building owner specifying which detectors have been tested.

14.4.4.5.4 Within 5 years, each detector shall have been tested.

NFPA 720 *N* **14.4.4.5.5** Carbon monoxide apparatus that require resetting to maintain normal operation shall be restored to normal as promptly as possible after each test and alarm and kept in normal condition for operation. All test signals received shall be recorded to indicate date and time.

This requirement was originally part of NFPA 720 and requires that any equipment is restored to service as soon as possible after testing.

14.4.4.6* Circuit and pathway testing of each monitored circuit or pathway shall be conducted with initial acceptance or reacceptance testing to verify signals are indicated at the control unit for each of the abnormal conditions specified in Sections 23.5 through 23.7.

A.14.4.4.6 It is not intended to require testing the pathways at every device or circuit junctions.

Circuits must be tested to confirm proper operation under fault conditions. The specific performance required of a specific circuit depends on the class of the circuit as defined by Chapter 12, Circuits and Pathways. The abnormal conditions to be introduced refer to those specified in Sections 23.5, 23.6, and 23.7 for fire alarm systems.

14.4.5 Single- and Multiple-Station Alarms. (SIG-HOU)

Δ **14.4.5.1** Single- and multiple-station alarms and connected appliances shall be inspected, tested, and maintained in accordance with Table 14.3.1, Table 14.4.3.2, the manufacturer's published instructions.

14.4.5.2 Alarms and connected appliances shall be inspected and tested at least monthly.

Subsection 14.4.5 requires smoke alarms to be tested in accordance with the manufacturer's published instructions at least monthly. It is important that homeowners keep the manufacturer's instructions that were supplied with the smoke alarm because they may require testing more frequently than once per month. The instructions also include important information about maintenance of the smoke alarm, including periodic cleaning and battery replacement information.

14.4.5.3* The responsibility for inspection, testing, and maintenance of smoke alarms and connected appliances shall be in accordance with 14.2.3.

A.14.4.5.3 It is intended that smoke alarms and connected appliances be considered as a "fire protection system" for the purpose of applying the responsibility provisions in 14.2.3.

Subsection 14.2.3 specifies that the responsibility of inspection, testing, and maintenance lies with the property, building, or system owner or the owner's designated representative. For rental properties, the responsibility can be delegated to the tenant or a management company through specific provisions in the lease, written use agreement, or management contract.

N **14.4.5.4*** Notwithstanding other requirements of 14.2.3, the occupant of a dwelling unit shall be deemed qualified to perform inspection, testing, and maintenance on single- and multiple-station alarms protecting that dwelling unit when provided with information from the manufacturer or a manufacturer's certified representative.

This paragraph clarifies that when provided with instructions from the manufacturer, the occupants of an individual dwelling are permitted to inspect, test, and maintain the single- and multiple-station alarms within the dwelling they occupy.

• *N* **A.14.4.5.4** Permanent occupants (whether renters or owners) of a dwelling unit should be provided with training and information sufficient to operate, inspect, test, and maintain their own alarms. The information should cover basic maintenance requirements, testing, and troubleshooting procedures, and contact information for further support. It is not intended that occupants be trained to a level similar to a factory technician or to qualify them to redesign, program, or extend their alarms without further training.

14.4.5.5 Alarms and connected appliances shall be replaced when they fail to respond to operability tests.

14.4.5.6 Smoke alarms shall not remain in service longer than 10 years from the date of manufacture, unless otherwise provided by the manufacturer's published instructions.

14.4.5.7 Carbon monoxide alarms shall be replaced when either the end-of-life signal is dactuated or the manufacturer's replacement date is reached. NFPA 720

14.4.5.8 Combination smoke/carbon monoxide alarms shall be replaced when the end-of-life signal activates actuates or 10 years from the date of manufacture, whichever comes first, unless otherwise provided by the manufacturer's published instructions. NFPA 720

FAQ

Does the requirement to replace smoke alarms every 10 years apply to system smoke detectors?

The 10-year replacement requirement applies only to smoke alarms (not smoke detectors) in any occupancy type. If the manufacturer provides a means for an extended life beyond 10 years, the 10-year replacement requirement does not apply.

Combination smoke/CO alarms include CO sensing elements that may have a shorter life span than 10 years. These alarms include an end-of-life signal for the CO sensor. Therefore, these alarms must be replaced when the end-of-life signal activates or at the 10-year limit, whichever occurs first.

14.4.5.9 Where batteries are used as a source of energy for alarms, the batteries shall be replaced in accordance with the alarm equipment manufacturer's published instructions.

14.4.6 Household Fire Alarm Systems. (SIG-HOU)

Δ **14.4.6.1** Household alarm systems shall be inspected, tested, and maintained at least annually according to Table 14.3.1, Table 14.4.3.2, and the manufacturer's published instructions.

N **14.4.6.2** The responsibility for inspection, testing, and maintenance of smoke alarms and connected appliances shall be in accordance with 14.2.3.

> While 14.2.3 designates the property, building, or system owner as the responsible party for inspection, testing, and maintenance of a household fire alarm system, this can be delegated to another party, such as a contractor, through a written contract.

N **14.4.6.3*** Notwithstanding other requirements of 14.2.3, the occupant of a dwelling unit shall be deemed qualified to perform inspection, testing, and maintenance on a household alarm system protecting that dwelling unit when provided with information and/or training from the manufacturer or a manufacturer's certified representative.

> This paragraph clarifies that when provided with instructions from the manufacturer, the occupants of an individual dwelling are permitted to inspect, test, and maintain the household alarm system within the dwelling they occupy.

N **A.14.4.6.3** Permanent occupants (whether renters or owners) of a dwelling unit should be provided with training and information sufficient to operate, inspect, test, and maintain their own household alarm system. The information should cover basic maintenance requirements, testing and troubleshooting procedures, and contact information for further support. It is not intended that occupants be trained to a level similar to a factory technician or to qualify them to redesign, program, or extend their systems.

N **14.4.6.4** The installing contractor shall be required to provide thisthe information in 14.4.6.3 in writing to the customer upon completion of the system installation.

> The installing contractor must provide the dwelling occupant with information necessary to inspect, test, and maintain a household fire alarm system.

NFPA 720 *N* **14.4.6.5** Carbon monoxide detectors shall be replaced when the end-of-life signal is activate-dactuated, the manufacturer's replacement date is reached, or when they fail to respond to operability tests.

> This paragraph clarifies that when provided with instructions from the manufacturer, the occupants of an individual dwelling are permitted to inspect, test, and maintain the CO detectors within the dwelling they occupy.

N **14.4.6.6** Maintenance of household alarm systems shall be conducted according to the manufacturer's published instructions.

> The installing contractor is required by 14.4.6.4 to provide the system owner with copies of the manufacturer's instructions for inspection, testing, and maintenance of a household fire alarm system.

14.4.7 Circuits from Central Station. Circuits extending from the central station that have had no signal activity in the preceding 24 hours shall be tested at intervals of not more than 24 hours.

Operators at the central station initiate these tests to verify that all circuits and pathways between the central station and the protected premises are operating.

N **14.4.8 Household Carbon Monoxide Detection Systems.**

NFPA 720

N **14.4.8.1 Testing of Household Carbon Monoxide Detection Systems.**

A household CO detection system is very similar to a household fire alarm system. Likewise, the inspection, testing, and maintenance of this system is similar to a fire alarm system. The requirements for CO detection systems were originally in NFPA 720. The requirements were incorporated into *NFPA 72* because NFPA 720 has been withdrawn.

N **14.4.8.1.1** Household carbon monoxide detection systems shall be tested by a qualified service technician at least every 3 years according to the methods in line 1 of Table 14.4.3.2.

N **14.4.8.1.2** Household carbon monoxide detection systems shall be tested in accordance with the manufacturer's published instructions.

N **14.4.8.1.3*** Notwithstanding other requirements of 14.2.3.6, the occupant of a dwelling unit shall be deemed qualified to perform inspection, testing, and maintenance on an alarm system protecting that dwelling unit when provided with information and training from the manufacturer or a manufacturer's certified representative.

N **A.14.4.8.1.3** Permanent occupants (whether renters or owners) of a dwelling unit should be provided with training and information sufficient to operate, inspect, test, and maintain their own alarm systems. The training should cover basic maintenance requirements, testing and troubleshooting procedures, and contact information for further support. It is not intended that occupants be trained to a level similar to a factory technician or to qualify them to redesign, program, or extend their systems.

14.4.9 Public Emergency Alarm Reporting Systems.

14.4.9.1 Emergency power sources other than batteries shall be tested at least weekly in accordance with 14.4.9.1.1 and 14.4.9.1.2.

14.4.9.1.1 Testing shall include operation of the power source to supply the system for a continuous period of 1 hour.

14.4.9.1.2 Testing shall require simulated failure of the normal power source.

14.4.9.2 Unless otherwise permitted by 14.4.9.3, testing facilities shall be installed at the communications center and each subsidiary communications center, if used.

14.4.9.3 Testing facilities for systems leased from a nonmunicipal organization shall be permitted to be installed at locations other than the communications center if approved by the authority having jurisdiction.

14.4.10 In-Building Emergency Radio Communication Systems. In-building emergency radio communication systems shall be inspected and operationally tested in accordance with the requirements of NFPA 1221.

Two-way radio communications enhancement systems are permitted by Section 24.9. These systems are installed to enhance the radio communications used by the fire department and are typically installed at the request of the responding fire department in place of a two-way, in-building wired

emergency services communications system in the facility. Where such systems are installed, inspection and testing must comply with the requirements of NFPA 1221, *Standard for the Installation, Maintenance, and Use of Emergency Services Communications Systems,* because that document has jurisdiction over such systems.

14.4.11* Voice Intelligibility.

A.14.4.11 See Annex D, Speech Intelligibility.

Annex D, Speech Intelligibility, provides guidance on the planning, design, installation, and especially the testing of voice communications systems. Refer to the commentary following Table 14.4.3.2, Item 22(2).

14.4.11.1 Voice communication using prerecorded messages and manual voice announcements shall be verified as being intelligible in accordance with the requirements of 18.4.11.

FAQ After acceptance testing, should systems be tested periodically for intelligibility?

Systems must be periodically tested for intelligibility, but measurements might not be required. Table 14.4.3.2, item 22(2), for audible textual notification appliances (loudspeakers), requires an annual periodic test of the operation of the notification appliances. If there are changes to the building or the system — all factors that can affect intelligibility — additional testing might be warranted. However, if the system is classified as an MNS, Table 14.4.3.2, item 30(6), requires annual qualitative testing of the message clarity and annual measurement with a meter of the alert or evacuation tone sound pressure level.

System Design Tip

Although Annex D has a recommended protocol for testing speech intelligibility, the body of the Code only requires a "listen" test. Designers, owners, and authorities having jurisdiction will have to decide when and where testing is desirable, if at all.

Refer to the FAQ following 18.4.11.6 relative to quantitative measurements for intelligible voice communication.

14.4.11.2 Intelligibility shall not be required to be determined through quantitative measurements.

Quantitative measurement is not required to determine voice message intelligibility. Voice messages are required to only be verified as being distinguishable and understandable and permits qualitative assessment — a simple listen test. In some cases, it may be acceptable to ensure that the voice messages broadcast over the loudspeakers in a fire alarm or ECS are intelligible (understandable) to the building occupants.

System Design Tip

While a quantitative evaluation, described in Annex D, using intelligibility meters is permitted, it is not required. Even if intelligibility meters were used, intelligibility testing in every office or space might not be necessary if voice messages can be understood. Or, if a meter measurement were made in one office, similar offices would not need to be tested if a qualitative assessment was made to ensure that the message quality was similar. Subsection 18.4.11 addresses requirements for a designer to designate where intelligibility is required and where it is not required or will not be provided.

Note that attempting to test for intelligibility in a building without interior finishes and furnishings will likely yield a lower level of measured intelligibility than with the building fully furnished and occupied. The presence of people and the noise that they generate can result in higher intelligibility due to their absorbing the energy of the louder voice message or intelligibility test signal, even though a meter may indicate an error due to interference from other sources of sound.

14.4.11.3 Quantitative measurements as described in Annex D shall be permitted but shall not be required.

14.5 Maintenance.

See 3.3.159 for the definition of the term *maintenance*.

14.5.1 System equipment shall be maintained in accordance with the manufacturer's published instructions.

14.5.2 The frequency of maintenance of system equipment shall depend on the type of equipment and the local ambient conditions.

14.5.3 The frequency of cleaning of system equipment shall depend on the type of equipment and the local ambient conditions.

Maintenance is required to be performed in accordance with the manufacturer's published instructions, with an emphasis on cleaning. Cleaning should be in strict accordance with the manufacturer's instructions and as frequently as the ambient conditions of the placement area demand. For example, the manufacturer of a smoke detector could recommend annual cleaning, but ambient conditions might dictate cleaning be conducted at 6-month intervals. Areas subject to accumulations of dust and dirt that require more frequent cleaning include elevator hoistways and machine rooms, HVAC ducts, and boiler rooms.

14.5.4 All apparatus requiring rewinding or resetting to maintain normal operation shall be rewound or reset as promptly as possible after each test and alarm.

14.5.5 Unless otherwise permitted by 14.5.6, the retransmission means as defined in Section 26.3 shall be tested at intervals of not more than 12 hours.

Subsection 14.5.5 applies to the frequency of testing the means of signal retransmission from the central station to the communications center. This subsection applies only to central station fire alarm systems.

14.5.6 When the retransmission means is the public-switched telephone network, testing shall be permitted at weekly intervals to confirm its operation to each communications center.

14.5.7 As a part of the testing required in 14.5.5, the retransmission signal and the time and date of the retransmission shall be recorded in the central station.

14.6 Records.

14.6.1* Permanent Records. After successful completion of acceptance tests approved by the authority having jurisdiction, the requirements in 14.6.1.1 through 14.6.1.3 shall apply.

A.14.6.1 For final determination of record retention, see 14.4.4.3 for sensitivity options.

14.6.1.1 A set of reproducible as-built installation drawings, operation and maintenance manuals, and a written sequence of operation shall be provided to the building owner or the owner's designated representative.

14.6.1.2* The requirements of 7.5.7 shall apply to site-specific software.

A.14.6.1.2 With many software-based fire systems, a copy of the site-specific software is required to restore system operation if a catastrophic system failure should occur. Without a back-up copy readily available on site, recovery of system operation by authorized service personnel can be substantially delayed.

The intent of this requirement is to provide authorized service personnel with an on-site copy of the site-specific software. The on-site copy should provide a means to recover the last installed and tested version of the site-specific operation of the system. This typically would be an electronic copy of the source files required to load an external programming device with the site-specific data. This requirement does not extend to the system executive software, nor does it require that the external programmer software if required be stored on site.

It is intended that this copy of the software be an electronic version stored on a nonrewritable media containing all of the file(s) or data necessary to restore the system and not just a printed version of the operation stored on electronic media. One example of a nonrewritable medium is a CD-R.

14.6.1.3 The system owner shall be responsible for maintaining these records for the life of the system for examination by any authority having jurisdiction. Paper or electronic media shall be permitted.

FAQ

Who is responsible for maintaining fire alarm system records?

The system owner is responsible for maintaining records for the life of the system. A historical record of the system installation that includes the information required by Chapter 7 provides the technician valuable information to assist with diagnosing and repairing system faults. The owner is to be provided with and maintain a copy of the site-specific software so that it is available to determine how the system is programmed and to reprogram the system if the program in the control unit is corrupted or deleted.

FM

14.6.2 Maintenance, Inspection, and Testing Records.

14.6.2.1 Records shall be retained until the next test and for 1 year thereafter.

14.6.2.2 For systems with restorable fixed-temperature, spot-type heat detectors tested over multiple years, records shall be retained for the 5 years of testing and for 1 year thereafter.

14.6.2.3 The records shall be on a medium that will survive the retention period. Paper or electronic media shall be permitted.

14.6.2.4* A record of all inspections, testing, and maintenance shall be provided in accordance with 7.8.2.

A.14.6.2.4 One method used to define the required sequence of operations and to document the actual sequence of operations is an input/output matrix *(see Figure A.14.6.2.4)*.

14.6.3 Supervising Station Records. For supervising station alarm systems, records pertaining to signals received at the supervising station that result from maintenance, inspection, and testing shall be maintained for not less than 12 months.

System Outputs

No.	System Inputs	A	B	C	D	E	F	G	H	I	J	K	L	M	N	O	P	Q	R	S	T	U	V	W	X	Y	Z	AA	BB	CC	DD	EE	FF	GG	No.
		Control Unit Annunciation									Notification							Required Fire Safety Control											Supplementary						
		Actuate common alarm signal indicator	Actuate audible alarm signal	Actuate common supervisory signal indicator	Actuate audible supervisory signal	Actuate common trouble signal indicator	Actuate audible common trouble signal	Actuate 1st floor (zone 1) alarm indicator	Actuate 1st floor (zone 2) alarm indicator	Actuate 1st floor (zone 3) alarm indicator	Actuate 1st floor evacuation signals	Actuate 2nd floor evacuation signals	Actuate 3rd floor evacuation signals	Display/print change of status	Transmit fire alarm signal to supervising station	Transmit supervisory signal to supervising station	Transmit trouble signal to supervising station	Release magnetically held smoke doors	Recall elevators to primary recall floor	Recall elevators to alternate recall floor	Close smoke/fire dampers in rated walls	Actuate 1st floor smoke exhaust	Actuate 2nd floor smoke exhaust	Actuate 3rd floor smoke exhaust	Unlock exits	Actuate suppression system predischarge alarms	Initiate suppression system releasing sequence	Energize releasing solenoids	Actuate graphics system – display floor map	Pressurize stairwells	Shutdown process #1	Shutdown process #2	Shutdown process #3	Actuate exterior visual notification appliance at f.d. response point	
1	Manual fire alarm boxes – 1st floor	●	●					●			●			●	●			●							●				●		●			●	1
2	Manual fire alarm boxes – 2nd floor	●	●						●			●		●	●			●							●				●			●		●	2
3	Manual fire alarm boxes – 3rd floor	●	●							●			●	●	●			●							●				●				●	●	3
4	Smoke detectors – 1st floor	●	●					●			●			●	●			●	●			●			●				●					●	4
5	Smoke detectors – 3rd floor	●	●						●			●		●	●			●	●				●		●				●					●	5
6	Smoke detectors – 1st floor	●	●							●			●	●	●			●	●					●	●				●					●	6
7	Smoke detectors – 1st floor elev. lobby	●	●					●			●			●	●			●		●					●				●					●	7
8	2nd floor computer rm. smoke det.-zone 1	●	●						●			●		●	●			●	●						●	●			●					●	8
9	2nd floor computer rm. smoke det.-zone 2	●	●						●			●		●	●			●	●						●		●	●	●					●	9
10	In-duct smoke detector – supply fan 1	●	●					●						●	●			●							●				●					●	10
11	In-duct smoke detector – supply fan 2	●	●					●						●	●			●							●				●					●	11
12	In-duct smoke detector – 1st floor return	●	●					●						●	●			●							●				●					●	12
13	In-duct smoke detector – 2nd floor return	●	●						●					●	●			●							●				●					●	13
14	In-duct smoke detector – 3rd floor return	●	●							●				●	●			●							●				●					●	14
15	Heat detectors – 1st floor mech. rm.	●	●					●						●	●			●	●						●				●					●	15
16	Heat detectors – 2nd floor storage room	●	●						●					●	●			●	●						●				●					●	16
17	Heat detectors – 3rd floor janitor's closet	●	●							●				●	●			●	●						●				●					●	17
18	Waterflow – 1st floor	●	●					●						●	●			●	●		●	●			●				●	●	●			●	18
19	Waterflow – 2nd floor	●	●						●					●	●			●	●		●		●		●				●	●		●		●	19
20	Waterflow – 3rd floor	●	●							●				●	●			●	●		●			●	●				●	●			●	●	20
21	Sprinkler control valve – 1st floor			●	●									●		●													●						21
22	Sprinkler control valve – 2nd floor			●	●									●		●													●						22
23	Sprinkler control valve – 3rd floor			●	●									●		●													●						23
24	Fire pump running	●	●											●	●			●							●				●					●	24
25	Fire pump power failure/phase reversal			●	●									●		●													●						25
26	Fire alarm ac power failure					●	●										●																		26
27	Fire alarm system low battery					●	●										●																		27
28	Open circuit					●	●										●																		28
29	Ground fault					●	●										●																		29
30	Notification appliance circuit short					●	●										●																		30
		A	B	C	D	E	F	G	H	I	J	K	L	M	N	O	P	Q	R	S	T	U	V	W	X	Y	Z	AA	BB	CC	DD	EE	FF	GG	

N ***FIGURE A.14.6.2.4*** *Typical Input/Output Matrix.*

14.6.3.1 Records shall be permitted to be maintained on either paper or electronic media.

14.6.3.2 Upon request, a hard copy record shall be provided to the authority having jurisdiction.

14.6.4 Simulated Operation Note. If the operation of a device, circuit, fire alarm control unit function, or special hazard system interface is simulated, it shall be noted on the inspection/test form that the operation was simulated.

Interfaced systems, such as elevators, sprinkler systems, HVAC systems, and smoke control systems, are not usually fully tested during a fire alarm system test because these interfaced systems generally require personnel with special training and knowledge to test them properly. If testing the fire alarm system simply simulates operation of the interfaced systems, this must be noted on the test report. For example, if a fire alarm system test simulates actuation of a suppression system by measuring the output voltage from a set of contacts, that needs to be noted on the test report. Refer to the commentary following 14.2.10.

References Cited in Commentary

"Cry Wolf," *NEMA Magazine*, Fall 2003, National Electrical Manufacturers Association, Rosslyn, VA.

NFPA 4, *Standard for Integrated Fire Protection and Life Safety System Testing*, 2018 edition, National Fire Protection Association, Quincy, MA.

NFPA 11, *Standard for Low-, Medium-, and High-Expansion Foam*, 2016 edition, National Fire Protection Association, Quincy, MA.

NFPA 12, *Standard on Carbon Dioxide Extinguishing Systems*, 2018 edition, National Fire Protection Association, Quincy, MA.

NFPA 12A, *Standard on Halon 1301 Fire Extinguishing Systems*, 2018 edition, National Fire Protection Association, Quincy, MA.

NFPA 16, *Standard for the Installation of Foam-Water Sprinkler and Foam-Water Spray Systems*, 2019 edition, National Fire Protection Association, Quincy, MA.

NFPA 17, *Standard for Dry Chemical Extinguishing Systems*, 2017 edition, National Fire Protection Association, Quincy, MA.

NFPA 25, *Standard for the Inspection, Testing, and Maintenance of Water-Based Fire Protection Systems*, 2017 edition, National Fire Protection Association, Quincy, MA.

NFPA 80, *Standard for Fire Doors and Other Opening Protectives,* 2016 edition, National Fire Protection Association, Quincy, MA.

NFPA 551, *Guide for the Evaluation of Fire Risk Assessments*, 2016 edition, National Fire Protection Association, Quincy, MA.

NFPA 720, *Standard for the Installation of Carbon Monoxide (CO) Detection and Warning Equipment* (withdrawn), National Fire Protection Association, Quincy, MA.

NFPA 1221, *Standard for the Installation, Maintenance, and Use of Emergency Services Communications Systems,* 2016 edition, National Fire Protection Association, Quincy, MA.

NFPA 2001, *Standard on Clean Agent Fire Extinguishing Systems*, 2018 edition, National Fire Protection Association, Quincy, MA.

SFPE Handbook of Fire Protection Engineering, 5th edition, National Fire Protection Association, Quincy, MA, and Society of Fire Protection Engineers, Bethesda, MD, 2016.

Reserved Chapters

In the 2019 edition of *NFPA 72®, National Fire Alarm and Signaling Code®*, the following chapters are reserved for future use:

- Chapter 15
- Chapter 16

Initiating Devices

CHAPTER

17

Chapter 17 covers the design and installation criteria for all sensors and devices that recognize — or are used to provide recognition of — the existence of a fire or the status of a protected space and the fire protection systems within that space. The term *initiating device* in 3.3.141 refers to all forms of signal input devices and sensors, which include manually operated fire alarm boxes, automatic fire detectors, gas detectors, and switches that detect the operation of a fire extinguishing or fire suppression system. Also, various supervisory switches for control valve status, temperature, pressure, water level, and potential other conditions are covered in Chapter 17. In short, this chapter covers any device that provides an incoming signal to the fire alarm control unit (FACU).

The following list is a summary of significant changes to Chapter 17 for the 2019 edition:

- Expanded requirements in 17.7.3.6 to recognize the current knowledge and practices for the proper use of air-sampling systems.
- Revised requirements in 17.17.2.2 to better address air pressure monitoring for both high and low differential dry sprinkler valves.
- During the development of the 2019 edition, a major effort was undertaken to relocate the requirements of NFPA 720, *Standard for the Installation of Carbon Monoxide (CO) Detection and Warning Equipment*, into various chapters of *NFPA 72®, National Fire Alarm and Signaling Code®*. Accordingly, requirements related to placement, product listing, and installation of CO detectors are now found in new Section 17.12. These requirements apply when required by other codes and ordinances.

Selection of Performance- or Prescriptive-Based Approach

System Design Tip

Performance-based detection designs play a prominent role in the application of fire alarm systems. The designer has the option of selecting either a prescriptive- or a performance-based approach to design with heat detectors and smoke detectors. Once the design option has been selected, the designer follows the criteria outlined for that option. The performance-based design method is the only permitted option for video image smoke detection (17.7.7) and radiant energy–sensing fire detectors (Section 17.8).

System Design Tip

In general, the earlier a fire detector or other initiating device status change is reported, the better. In the case of fire detectors, a prompt signal allows for an emergency response to smaller fires that are easier to extinguish and less damaging than larger fires. The objective of the system design is to achieve sufficient speed and assurance of response to a fire or supervised condition with minimal probability that such signals are the result of a nonfire stimulus or false source. System designers can achieve this objective only if they select the proper type of initiating device for each application. This selection process requires a thorough understanding of how each type of initiating device operates and how it is affected by its environment. The mission effectiveness of the fire alarm system depends heavily on this choice.

Automatic fire detectors respond to changes in the ambient conditions in the vicinity of the detector that are the result of the fire. A heat detector responds to an increase in the ambient temperature in its immediate vicinity. A smoke detector responds to the presence of smoke in the air in its immediate vicinity. A flame detector responds to the influx of radiant energy that has traveled from the fire to the detector. In each case, heat, smoke, or electromagnetic radiation (light) must travel from the fire to the detector before the detector initiates an alarm signal.

Factors that influence initiating device selection and location

Smoke and Heat Detectors. The placement and spacing of both smoke detectors and heat detectors depend on the transfer of combustion products (i.e., heat, smoke) from the location of the fire to the vicinity of the detector. A set of physical principles referred to as fire plume dynamics describes this transfer of smoke aerosol or of heated combustion product gases and air. The combustion reactions of the fire heat the air immediately above it as hot combustion product gases and radiant energy are released. The hot air and combustion gas mixture rises in an expanding buoyant column, or plume, from the fire to the ceiling. As the fire burns, it continues to produce additional hot combustion product gases, which flow upward as a buoyant plume. When the plume collides with the ceiling, it turns and flows horizontally beneath the ceiling. This horizontal flow of combustion product gases beneath the ceiling is a ceiling jet. The ceiling jet consists of a layer of hot air and combustion gases that expand radially away from the fire plume centerline, as shown in Exhibit 17.1.

The ceiling jet carries the heat and combustion product gases (smoke) to the heat detector or smoke detector mounted on the ceiling. The location and spacing criteria for heat and smoke detectors in Chapter 17 are derived from an understanding of how the ceiling jet forms and behaves. The speed of response of a system using heat detectors or smoke detectors is determined, in part, by two factors: (1) the velocity of the ceiling jet as it conveys heat and smoke from the fire plume to the detector, and (2) the distance the ceiling jet must travel from the fire plume centerline to the nearest detector.

Radiant Energy–Sensing Detectors. Radiant energy–sensing detectors respond to the electromagnetic radiation from the fire. The fire emits radiation in all directions. All materials in the environment, including the air through which the radiation must travel, reflect, diffract, absorb, and transmit radiant energy. As the distance between the fire and the detector increases, the intensity of the radiant energy available to the detector diminishes. The speed of response of the radiant energy–sensing detector is determined, in part, by the distance between the detector and the fire and the effect of air on the transmission of radiant energy from the fire to the detector.

Manual Fire Alarm Boxes. Manual fire alarm boxes provide a means for human observers to initiate a fire alarm signal. They are distributed in a manner that provides both relatively short travel time and ease of operation while occupants are leaving the building. The speed of response is determined largely by the speed with which the occupants can travel and the distance they must travel to reach a manual fire alarm box.

System Expectations

The prescriptive system design requirements in this chapter are intended to provide the minimum criteria sufficient to fulfill generally accepted response expectations. However, the Code does not quantify those response expectations. Where the needed response differs from general expectations or where conditions are different from those presumed by the prescriptive criteria, this chapter permits the use

EXHIBIT 17.1

Ceiling Jet Formed by Fire Plume.

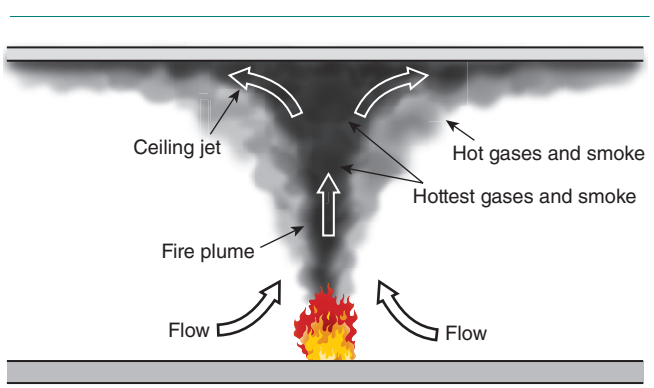

of performance-based design methods. See Annex B, Engineering Guide for Automatic Fire Detector Spacing, and "Performance-Based Design and Fire Alarm Systems" at the end of Annex B.

17.1 Application.

Section 17.1 addresses the applicability of the requirements of Chapter 17. Subsections 17.1.1, 17.1.2, and 17.1.7 provide the basic scope of the chapter and establish an understanding of this chapter's scope limitations. Subsections 17.1.3, 17.1.4, and 17.1.5 describe the relationships between this chapter and the remainder of the Code. Subsection 17.1.6 establishes the intended audience for the chapter.

17.1.1* The performance, selection, use, and location of automatic or manual initiating devices shall comply with the minimum requirements of this chapter.

NFPA 720

In prior editions of *NFPA 72*, the paragraph on "Application" included examples of initiating devices covered by this chapter, which was deemed unenforceable text. That list is relocated to Annex A in A.17.1.1.

N **A.17.1.1** Examples of initiating devices include, but are not limited to, fire detection devices, carbon monoxide or other gas detection devices, devices that detect the operation of fire suppression and extinguishing systems, waterflow detectors, pressure switches, manual fire alarm boxes, and other supervisory signal–initiating devices (including guard tour reporting) used to ensure timely warning for the purposes of life safety and the protection of a building, a space, a structure, an area, or an object.

17.1.2* This chapter establishes the minimum installation criteria for initiating devices required by other governing laws, codes, standards, or sections of this document. This chapter does not, by itself, require the installation of initiating devices.

A.17.1.2 The initiating devices chapter does not specify requirements for having or using any particular type of initiating device for a particular application. The requirements to have certain initiating devices are found in other NFPA codes and standards, or in other governing laws, codes, or standards. In a few instances other parts of this Code might require some minimal complement of initiating devices. For example, 10.4.5 requires a smoke detector at control unit locations but does not require complete smoke detection of any particular area. Similarly, 23.8.5.1.2 requires at least one manual fire alarm box on any fire alarm system that is connected to a supervising station and that also employs automatic fire detectors or waterflow detection devices. Thus, a system that might be required solely for the purpose of monitoring a sprinkler system and sending a signal off premises would still require a smoke detector at any control unit locations as well as a single manual pull station.

FAQ Does Chapter 17 establish the need for the installation of initiating devices?

Chapter 17 establishes the selection and placement criteria for initiating devices. These criteria ultimately establish the number and type of initiating devices. When a designer places detection in a specific area or in a manner to protect from a specific hazard, the detection devices to be installed must follow the requirements outlined.

The requirement for some form of fire or supervisory signal initiation is established in the codes and standards that cover a specific class of occupancy or, in some cases, a specific class of fire protection

System Design Tip

system. The property owner, property insurance carrier, or other authority having jurisdiction might also establish requirements for fire alarm or supervisory signal initiation. Once a requirement has been established by some other code or authority, the designer then refers to Chapter 17 for the specifics of selection, installation, and placement.

Assume a community adopts NFPA *101®*, *Life Safety Code®*, or a local ordinance that states residential buildings must install smoke detectors in corridors per *NFPA 72*. In this case, corridor smoke detectors are mandated by a legal code adoption and must follow the requirements of Chapter 17. Accordingly, Chapter 17 establishes the design and installation requirements for that corridor smoke detection system but does not, by itself, require the corridor smoke detection system.

System Design Tip

As another example, Chapter 40 of NFPA *101*, which covers industrial occupancies, requires a fire alarm system where 100 or more people are on-site and 25 or more people are on a floor other than the exit discharge–level floor. Chapter 40 also addresses the means (i.e., manual initiation, automatic fire detection, automatic sprinkler operation) needed to initiate the fire alarm system and the requirements for occupant notification. The fire protection designer of such an industrial site must then refer to *NFPA 72* for the relevant requirements for that fire alarm system and to Chapter 17 for the determination of the type, quantity, and placement of the fire detection devices, as well as the installation requirements for waterflow switches, pressure switches, and other initiating devices that are associated with a suppression system or monitored process.

For example, NFPA 664, *Standard for the Prevention of Fires and Explosions in Wood Processing and Woodworking Facilities*, requires the use of spark/ember detectors in certain instances. The designer using NFPA 664 must then refer to Chapter 17 of the Code for the relevant installation requirements for spark/ember detectors.

17.1.3 The requirements of Chapters 7, 10, 12, 21, 23, and 24 shall also apply unless they are in conflict with this chapter.

System Design Tip

Chapter 17 provides the installation requirements regarding fire alarm signal and supervisory signal–initiating devices. Chapters 7, 10, 12, 21, 23, and 24 include requirements that relate to where and under what circumstances such devices are required. The designer must refer to Chapters 7, 10, and 12 for requirements relating to the means of connection. Chapters 21, 23, and 24 have criteria that are implemented by referring to Chapter 17.

17.1.4 The requirements of Chapter 14 shall apply.

Chapter 14 covers the inspection, testing, and maintenance criteria for the fire alarm system, including all initiating devices.

17.1.5 The requirements of single- and multiple-station alarms and household fire alarm systems shall be determined in accordance with Chapter 29.

17.1.6 The material in this chapter shall be applied by persons knowledgeable in the application of fire detection and fire alarm systems and services.

System Design Tip

The phrase "persons knowledgeable in the application of fire detection and fire alarm systems and services" refers to someone of a skill and knowledge level that goes beyond knowing the requirements of the Code. The user is expected to understand the role that the fire alarm system plays in the overall fire safety strategy for the site. Knowing the limitations of the types of detectors is as important as knowing which detector is the right choice for the application. Understanding which type of system will meet the owner's goals is as important as understanding how the system will operate. Many jurisdictions have licensure or certification requirements for persons working on fire protection equipment. See also the requirements for the system designer in 10.5.1.

17.1.7 The interconnection of initiating devices with control equipment configurations and power supplies, or with output systems responding to external actuation, shall be as detailed elsewhere in this Code or in other governing laws, codes, or standards.

The interconnection of initiating devices to the FACU via system wiring is subject to requirements that relate to both the initiating device and the FACU. During the design process, the user must apply the requirements of this chapter and Chapters 7, 10, 12, 21, 23, and 24, as well as requirements in any relevant occupancy standards.

17.2 Purpose.

Automatic and manual initiating devices shall contribute to life safety, fire protection, and property conservation by providing a reliable means to signal other equipment arranged to monitor the initiating devices and to initiate a response to those signals.

The purpose of an initiating device is to provide an initiating signal to other equipment that performs the necessary functions, such as occupant notification, suppression system release, or elevator recall. It is not sufficient to install initiating devices by themselves.

17.3* Performance-Based Design.

The process of performance-based design is described in "Performance-Based Design and Fire Alarm Systems" at the end of Annex B. This chapter provides a performance-based design alternative to the prescriptive criteria for the design of the initiating devices of the fire alarm system and includes specific requirements that pertain to the review and approval of performance-based designs in Section 17.3. Usually, a performance-based design is deemed "engineering," and designers performing this work are subject to the licensure requirements of the governing jurisdiction.

System Design Tip

A.17.3 Annex B, Engineering Guide for Automatic Fire Detector Spacing, provides a detailed design guide for the implementation of the performance-based design of fire alarm systems.

17.3.1 Performance-based designs submitted to the authority having jurisdiction for review and approval shall include documentation, in an approved format, of each performance objective and applicable scenario, together with any calculations, modeling, or other technical substantiation used in establishing the proposed design's fire and life safety performance.

17.3.2 The authority having jurisdiction shall determine whether such identified performance objectives are appropriate and have been met.

Performance-based approaches might use various calculation and engineering methodologies including those for fire development and detector activation estimates. Although many authorities having jurisdiction are familiar and knowledgeable in the general application of fire detection devices, a performance-based approach could merit a peer review from a qualified engineer. This review can greatly assist the authority having jurisdiction in determining the adequacy of a performance-based design.

System Design Tip

17.3.3 The authority having jurisdiction shall approve modifications to or variations from the approved design or design basis in advance.

17.4 General Requirements.

17.4.1 The requirements of 17.4.2 through 17.4.7 shall apply to all initiating devices.

As used in this Code, the term *initiating device* covers not only fire detection devices such as manual fire alarm boxes, heat detectors, smoke detectors, and radiant energy–sensing detectors, but other devices that monitor conditions related to fire safety. These other devices include gas detectors, sprinkler system waterflow switches, pressure switches, valve tamper switches, building temperature monitoring devices, and any signaling switches used to monitor special extinguishing systems or activate suppression systems such as that shown for a foam system in Exhibit 17.2. The requirements in Section 17.4 apply to all monitoring devices that provide information in the form of binary, digital, or analog data transmitted to an FACU.

NFPA 720

17.4.2 Mechanical Protection.

A prudent system designer and installer would apply mechanical protection to every component of the fire alarm system. Damage to a detector or other initiating device has been determined to be the cause of many unwanted alarms as well as system failures.

Mechanical damage to initiating devices can be expected in low ceiling areas or tight equipment areas where detectors are near a zone of frequent maintenance operations. An inadvertent blow from a heavy tool or an abrupt collision from some person or object can seriously damage a detector or other initiating device. Also, mechanical damage can occur over an extended time from vibration, extremes in temperature, corrosive atmospheres, other chemical reactions, or excessive humidity. The designer and the installer must be sure that the initiating device is appropriate for the environment in which it is to be installed.

System Design Tip

FAQ Why must mechanical guards be listed for use with the detector?

Mechanical guards used to protect smoke detectors, heat detectors, and radiant energy–sensing detectors must be listed for that purpose. Because both smoke detectors and heat detectors rely on the ceiling jet to convey smoke and hot combustion product gases from the fire plume to the detector, any object that impedes that flow affects the detector's response. Similarly, any object that impedes the transmission of radiant energy to radiant energy–sensing detectors would have an adverse effect on the detector's response. The only means to be certain the mechanical guard is not a material impediment to detector response is to require that a qualified testing laboratory test and list the guard for the specific make and model detector. The listing will indicate the reduction in spacing or sensitivity that will result from use of the guard. See Exhibit 17.3 for an example of a mechanical guard for a smoke detector.

Initiating devices must always be mounted as shown in the manufacturer's installation instructions. The requirements for listing include a method for mounting that adequately supports the initiating device so that no undue mechanical stresses are applied to the circuit conductors. If the instructions show the use of an electrical device or outlet box, then installation of the device with a box is a requirement of the listing, and the specific type of box shown must be used. If not shown, the use of an electrical box is determined by field conditions and the requirements of *NFPA 70®, National Electrical Code® (NEC®)*.

The copper used in the wiring conductors is not formulated to serve as a mechanical support. Copper fatigues over time if placed under a mechanical stress, resulting in increasing brittleness and electrical resistance. Ultimately, the fatigued conductor breaks or its resistance becomes too high to allow the circuit to function properly. In either case, the operation of the circuit is impaired, and a loss of life or property could conceivably result because of fire alarm system failure.

EXHIBIT 17.2

Foam Fire Suppression System Manual Activation Switch. (Courtesy of Jeffrey Moore, P.E., JENSEN HUGHES)

N **17.4.2.1** Initiating devices subject to mechanical damages shall be protected.

N **17.4.2.2** If guards or covers are employed, they shall be listed for use with the initiating device.

N **17.4.2.3*** The protection shall not prevent the initiating device from achieving the objectives of the system by adversely affecting the use, operation, or performance of the initiating device.

N **A.17.4.2.3** Situations exist where supplemental enclosures are necessary to protect the physical integrity of an initiating device. Protective enclosures should not interfere with the performance characteristics of the device. If the enclosure degrades the performance, methods should be detailed in the manufacturer's published instructions of the protection device that clearly identify the degradation. In some cases, adjustments to initiating device sensitivity or range of operation are necessary to ensure the objective and performance of the system.

EXHIBIT 17.3

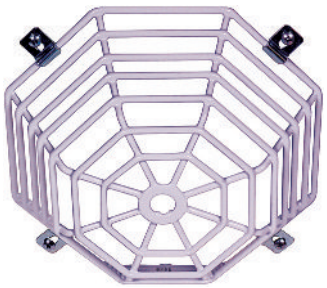

Protective Mechanical Guard for a Smoke Detector. (Source: Safety Technology International, Inc., Waterford, MI)

• **17.4.3** Initiating devices shall be installed in a manner that provides accessibility for periodic inspection, testing, and maintenance.

It is not permitted to install initiating devices where they cannot be inspected, tested, and maintained during the life of the system. If the initiating devices are inaccessible, the maintenance contractor will not be able to maintain them in accordance with Chapter 14, and they cannot be expected to provide reliable service. The term *inaccessible* is not defined in the Code; however, Chapter 3 has incorporated three definitions of the term *accessible* from *NFPA 70*. The definitions of *accessible (as applied to equipment)*, *accessible (as applied to wiring methods)*, and *accessible, readily (readily accessible)* provide the criteria to judge the acceptability of equipment, wiring, and device locations. Also see *Accessible Spaces (as applied to detection coverage in Chapter 17)* in 3.3.4.

The intent is not to discourage the use of portable ladders to access detection devices; the use of portable ladders would typically be needed to service detectors on ceilings of normal height and higher. Rather, the Code is concerned with extreme cases in which unusually tall extension ladders (such as those required in atriums) would be needed to service the devices. In high ceiling space areas, the only method of readily accessing detectors would be by using proper equipment such as high lifts. If special equipment is necessary to install a detection device, the designer should ensure that the owner understands that this special equipment will be needed for future inspection, testing, and maintenance of that device. The accessibility of a detector or other initiating device will ultimately be reflected in the ability of service personnel to perform the required inspection, testing, and maintenance in accordance with Chapter 14.

System Design Tip

17.4.4 Initiating devices shall be installed in all areas, compartments, or locations where required by other governing laws, codes, or standards.

Initiating devices must be used wherever required by another code or standard. Chapter 17 answers the questions about how many devices are required and how they should be installed. (Also see 17.5.3 as it relates to coverage for automatic detection.)

17.4.5* Duplicate terminals, leads, or connectors that provide for the connection of installation wiring shall be provided on each initiating device for the express purpose of connecting into the fire alarm system to monitor the integrity of the signaling and power wiring unless the initiating devices are connected to a system that provides the required monitoring.

Traditionally, FACU initiating device circuits (IDCs) have used a small monitoring current to recognize a break in a conductor or the removal of a device from the circuit. Under normal conditions, the

monitoring current flows through the circuit. When a device is removed or a conductor is broken, the current path is interrupted and the flow of current stops. The control unit translates this action into a trouble signal.

A common practice in the electrical trade in the installation of electrical receptacles is to remove a short section of insulation from the conductor and loop the wire beneath the screw terminal without ever cutting the conductor. This method of installation is unacceptable for a fire alarm initiating device. If this method were used, the connection to the initiating device (detector) could loosen over time and the device could become disconnected from the circuit. If this situation were to occur, the control unit would not recognize this as a break in the circuit and a loss of a detection device.

FAQ

Are duplicate leads required for initiating devices that are interrogated by an addressable system?

A microcomputer in the control unit maintains a list of the binary code that serves as the "name" of each initiating device in the system. The control unit sequentially addresses each device by name, also known as point-identification (binary code), and verifies the response from that device. The control unit recognizes if an initiating device fails to respond when it has been addressed, indicating that the device has failed or has been removed or that a break has occurred in the wiring. This method does not depend on the continuous flow of current. Therefore, these systems are exempt from the duplicate terminal requirement unless a Class A circuit is used.

See Exhibits 17.4 and 17.5 for examples of duplicate terminals/leads.

A.17.4.5 The monitoring of circuit integrity relies on the interruption of the wiring continuity when the connection to the initiating device is lost. Terminals and leads, as illustrated in Figure A.17.4.5(a) and Figure A.17.4.5(b), monitor the presence of the device on the initiating device circuit.

The following Closer Look feature provides the user with a fundamental understanding and comparison of two-wire and four-wire detector operation on a typical IDC.

EXHIBIT 17.4

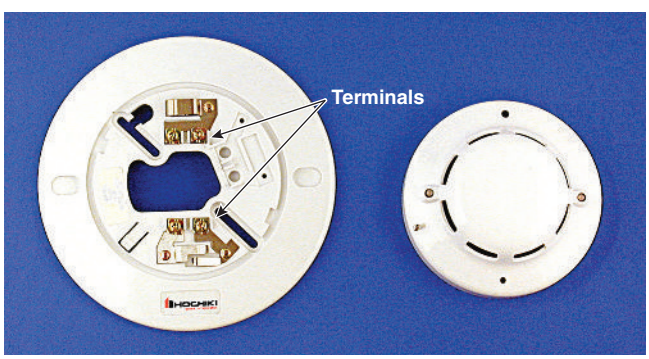

Smoke Detector with Base Showing Incoming and Outgoing Terminals. (Source: Hochiki America Corp., Buena Park, CA; photo courtesy of Mammoth Fire Alarms, Inc., Lowell, MA)

EXHIBIT 17.5

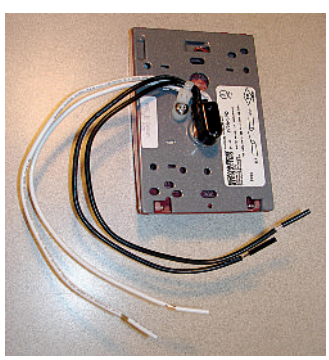

Connections for Manual Fire Alarm Box Showing Incoming and Outgoing Leads. (Source: Edwards, Mebane, NC)

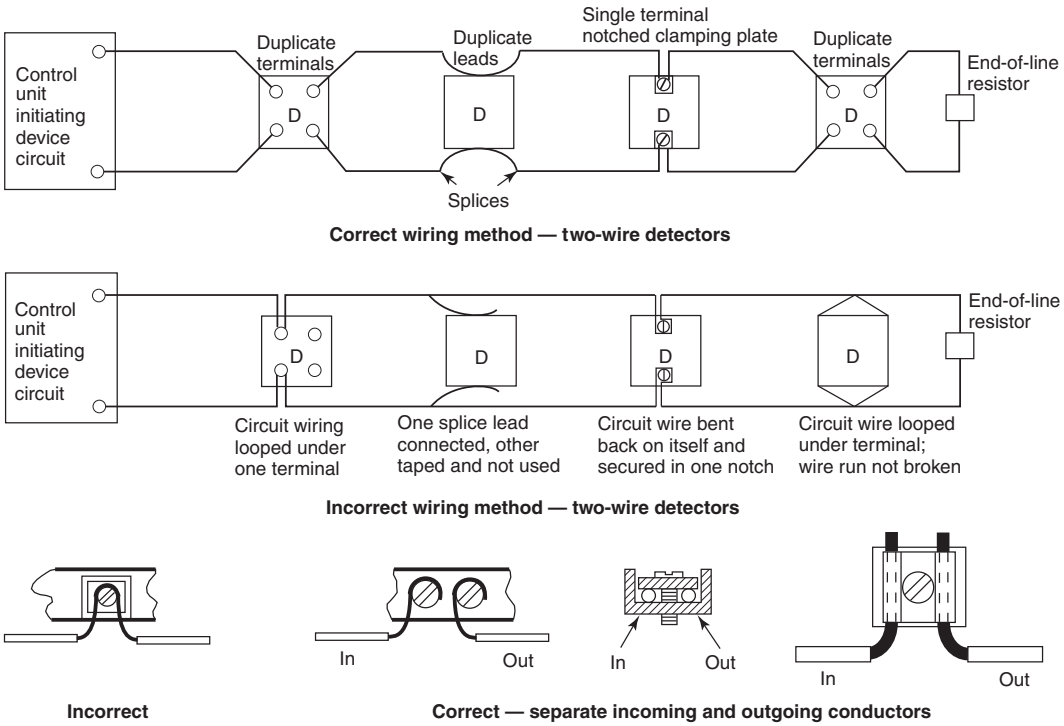

FIGURE A.17.4.5(a) *Correct (and Incorrect) Wiring Methods.*

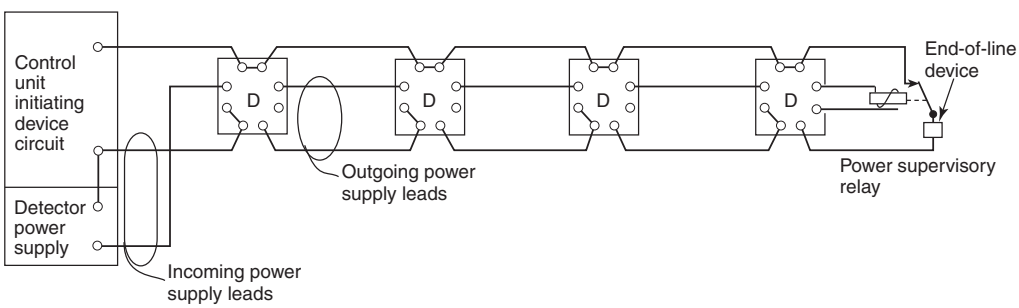

Illustrates four-wire smoke detector employing a three-wire connecting arrangement. One side of power supply is connected to one side of initiating device circuit. Wire run broken at each connection to smoke detector to provide supervision.

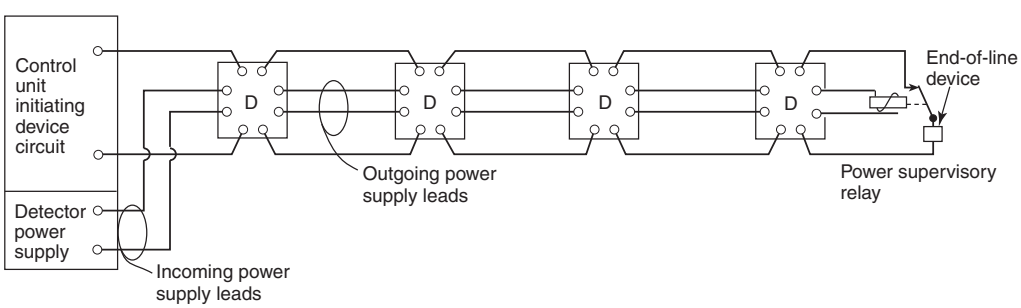

Illustrates four-wire smoke detector employing a four-wire connecting arrangement. Incoming and outgoing leads or terminals for both initiating device and power supply connections. Wire run broken at each connection to provide supervision.

D = Detector

FIGURE A.17.4.5(b) *Wiring Arrangements for Four-Wire Detectors.*

Closer Look

Two-Wire and Four-Wire Detector Operation on a Typical Initiating Device Circuit

Exhibit 17.6(a) illustrates a typical Class B IDC with five hardwired conventional (nonaddressable) initiating devices (two manual fire alarm boxes and three heat detectors). These devices are basic initiating devices that simply use a set of normally open contacts as an alarm reporting method. Circuit current normally flows from terminal 1 of the FACU along the length of the circuit, through the end-of-line resistor, and returns to terminal 2 of the FACU. When a device is activated, that device's contacts close and a short circuit is generated shunting the end-of-line resistor. The FACU then interprets this short circuit as an alarm condition and proceeds with activation of notification appliances and other pre-established control functions.

For example, Exhibit 17.6(b) depicts initiating device 2 in alarm state, as its normally open contact is now closed. This causes the current (I) to flow from FACU terminal 1, through device 2, and then back to FACU terminal 2. During this alarm condition, no current flows through the remaining wiring and devices 1, 3, 4, and 5, nor through the end-of-line resistor. A subsequent alarm state from the remaining devices may create a new path for the current (I) to flow, but the FACU will be unable to interpret it as a new alarm condition. This is a major limitation of Class B wiring for hardwired conventional initiating devices.

In Exhibit 17.6(c), devices 3, 4, and 5 have been replaced with a different type of detector. This type of detector is capable of obtaining its operating power and report an alarm condition on the same pair of wires; hence, the name "two-wire" detector. Rather than close a normally open contact during an alarm state, two-wire detectors impose a resistance on the circuit, as illustrated in Exhibit 17.6(d). The FACU then interprets this change in circuit resistance as an alarm condition and proceeds with activation of notification appliances and other pre-established control functions.

A distinct advantage of two-wire detectors is that the fire alarm circuit requires only two wires to operate rather than four. This simplifies operation and has distinct wire and labor savings. One disadvantage of two-wire detectors is that, after multiple alarms, it is possible that other devices on the same circuit will not be able to operate as they are "starved" of power. Ordinarily, this is not critical, as the first detector has already operated the circuit and the alarm condition has been acted upon.

System Design Tip

Another advantage of two-wire detectors is that emergency control functions — such as Elevator Phase I Emergency Recall Operation or fan shutdown — can be performed by the detector if additional relay contacts are provided. As discussed above, it is possible that only the first device will activate and provide its intended function. The designer needs to be aware of this aspect of two-wire detector operation. Exercise caution and refer to Table 14.4.3.2, Item 17(7)(h) for additional information. During acceptance and reacceptance testing, emergency control functions should always be tested and verified. Only those two-wire detectors that have been listed as compatible with the specific make and model FACU can be used. See 10.3.3.

For Exhibit 17.6(e), devices 3, 4, and 5 have been replaced with four-wire detectors. Unlike two-wire detectors, these detectors require two wires to report an alarm state condition and two additional wires to connect to a low voltage power source needed to power the detector; hence, the name "four-wire" detector.

Four-wire detectors are provided with a normally open alarm contact like the heat detectors illustrated in Exhibit 17.6(a), but the four-wire detectors will require separate power to operate. This power, also known as auxiliary power, is typically a 24 VDC circuit from the FACU as illustrated in Exhibit 17.6(e).

One important advantage of four-wire detectors is that they do not have the power concerns of hardwired conventional detectors [Exhibit 17.6(a)] and of two-wire detectors [Exhibit 17.6(d)] that only one detector on the circuit will operate. However, the auxiliary power to all four-wire detectors must be monitored so that power is provided to all devices to ensure that they operate properly. An end-of-line relay is provided to ensure power is available to all four-wire detectors. See Exhibit 17.6(e).

Failure of the end-of-line relay to energize will be interpreted by the FACU as a breach on the circuit, and it will be reported as an open circuit trouble. The system must be wired according to the manufacturer's published instructions.

EXHIBIT 17.6

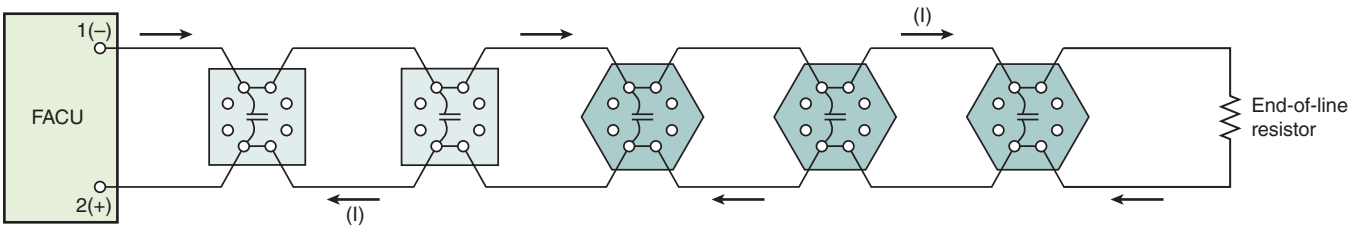

(a) Initiating device circuit (IDC) with two manual fire alarm boxes and three heat detectors

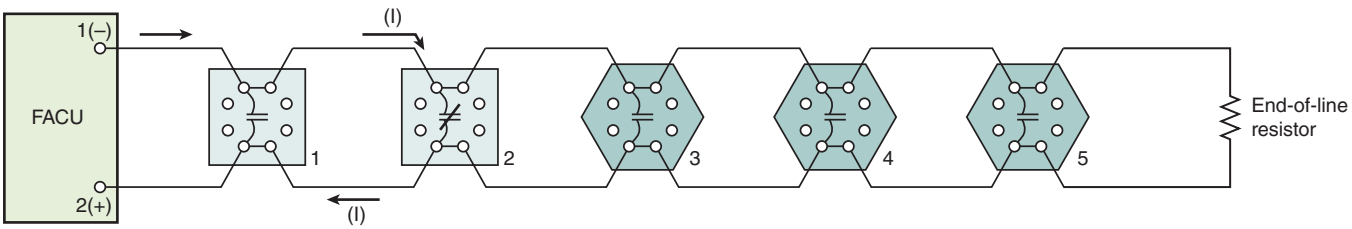

(b) Activation of manual fire alarm box #2

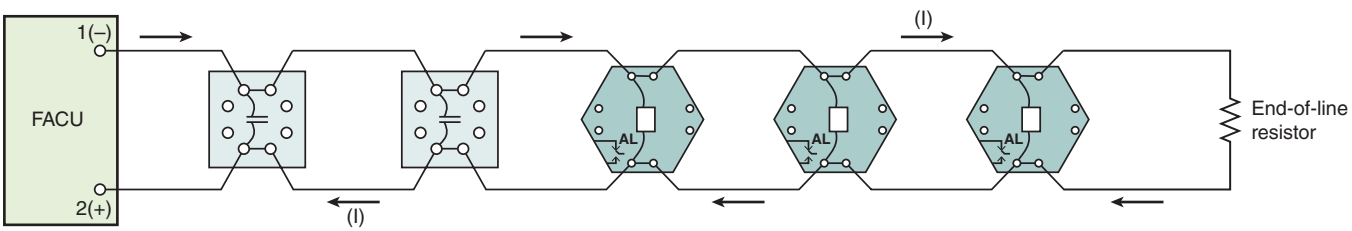

(c) The concept of two-wire detectors

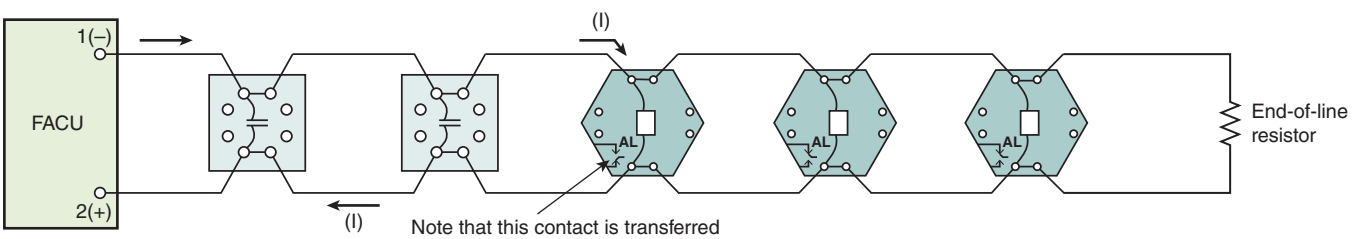

(d) Initiating device circuit with two manual fire alarm boxes and three two-wire detectors

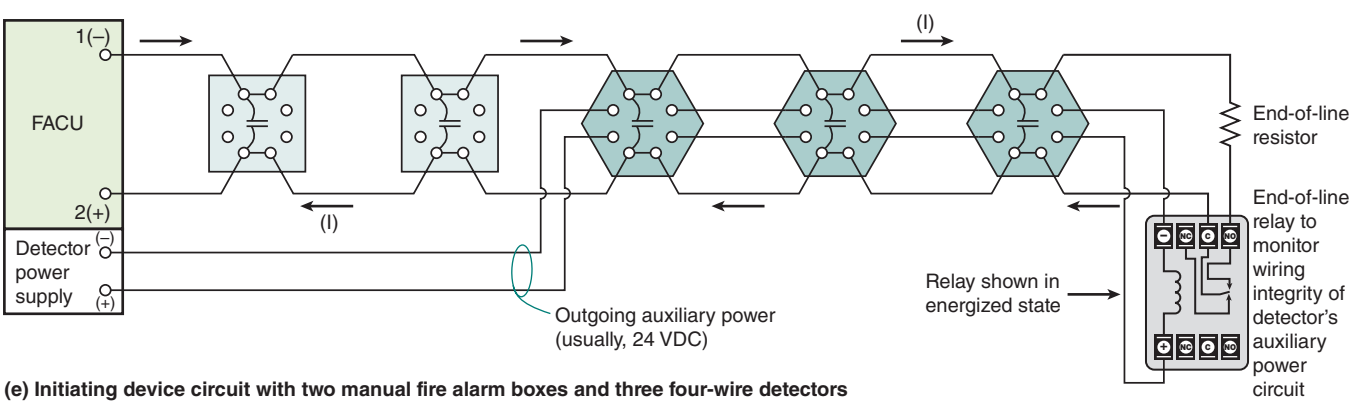

(e) Initiating device circuit with two manual fire alarm boxes and three four-wire detectors

Typical Class B IDC.

Δ NFPA 720

17.4.6 Where detectors are installed in concealed locations more than 10 ft (3.0 m) above the finished floor or in arrangements where the detector's alarm or supervisory indicator is not visible to responding personnel, the detectors shall be provided with remote alarm or supervisory indication in a location acceptable to the authority having jurisdiction.

EXHIBIT 17.7

Remote Indicator Used for Concealed Detectors. (Source: System Sensor Corp., St. Charles, IL)

Subsection 17.4.6 requires remote alarm or supervisory indication whenever a detector's built-in alarm indicator is not visible to building staff or emergency responders. Exhibit 17.7 shows an example of a remote alarm indicator. Paragraph 17.4.6.3 offers an alternative approach for displaying the signal at the control unit. The requirements apply to all detectors, including CO detectors that are now addressed in Chapter 17. In previous editions of *NFPA 72*, these requirements applied only to smoke detectors.

The remote indicator could include other functions or indicators such as a power-on indicator, reset switch, or test switch. Any detector accessories such as these must be listed and installed in accordance with the manufacturer's installation instructions. The location of the remote alarm or supervisory indicator must be acceptable to the authority having jurisdiction.

Remote alarm or supervisory indication is required whenever the detector status indicator is not visible to a person standing on the floor. This is true where any of the following conditions is present:

- An installed object (e.g., a duct or cable tray) obstructs the view of the detector.
- The installed orientation of the detector places its status indicator out of sight.
- The detector is located inside a space that does not permit access to view the detector status indicator (e.g., inside a locked closet or above a suspended ceiling that is more than 10 ft (3 m) above the finished floor).

Concealed spaces with a means of access (e.g., readily movable ceiling tiles) that can be reached by a person standing on the floor are not considered to be impediments to viewing a detector's status indicator. The height limitation of 10 ft (3 m) for a concealed location provides a maximum elevation at which a person could lift a ceiling tile to view detectors located in the ceiling void. For example, if the detector is installed above a suspended ceiling that is 9.5 ft (2.9 m) above the finished floor and if the detector can be seen when a ceiling tile is lifted, then remote indication is not required. However, if the suspended ceiling is 10.5 ft (3.2 m) above the finished floor, the space is not considered to be accessible and remote indication at an indicating device or the control unit (see 17.4.6.3) is required.

Where remote indication is not provided for a detector installed in an accessible concealed space, a means of identifying the presence and location of the detector should be provided.

Normally, detectors receive their operating power from the FACU. See 23.8.5.4.6.4 for an application where a duct smoke detector(s) is not resettable from the protected premises fire alarm system. Also refer to Exhibit 21.5, which follows 21.7.4.1, for examples of audible/visual signal indicators.

EXHIBIT 17.8

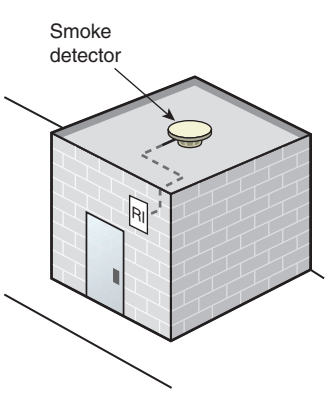

Concealed Smoke Detector in Locked Room with Remote Indicator (RI).

17.4.6.1* If a remote alarm indicator is provided, the location of the detector and the area protected by the detector shall be prominently indicated at the remote alarm indicator by a permanently attached placard or by other approved means.

A.17.4.6.1 Embossed plastic tape, pencil, ink, or crayon should not be considered to be a permanently attached placard.

A remote alarm indicator, usually a red light-emitting diode (LED) mounted on a single gang plate, is the most common method of indicating an alarm from a concealed detector. Locating and marking the remote alarm indicator are important so that the activated detector can be found easily. Engraved phenolic plates permanently attached to the remote alarm indicator are commonly used to comply with this requirement. See Exhibits 17.7 and 17.8 for examples of a remote indicator and a concealed smoke detector, respectively.

17.4.6.2 Remote alarm or supervisory indicators shall be installed in an accessible location and shall be clearly labeled to indicate both their function and any device or equipment associated with each detector.

Identification of which initiating device is activated is crucial, particularly wherever devices are installed in unfinished ceilings or in the above-ceiling space, because of the difficulties typically involved in getting to such detectors. This is especially true where duct-type smoke detectors are used for HVAC system shutdown or damper actuation. Because the fire causing activation may be far from the detector location, rapid identification of the individual activated detector is critical.

17.4.6.3 Detectors installed in concealed locations where the specific detector alarm or supervisory signal is indicated at the control unit (and on the drawings with its specific location and functions) shall not be required to be provided with remote alarm indicators as specified in 17.4.6.

In an addressable fire alarm system, a liquid crystal display (LCD) or video screen at the FACU or remote annunciator may provide detailed detector location information and function. Such a system is an acceptable alternative to the remote indicator. (See Exhibit 17.9.) Even if the FACU is used for the code-required indication, any remote alarm indicator additionally used for fire detectors in concealed spaces must meet the requirements of 17.4.6.1 and 17.4.6.2.

EXHIBIT 17.9

FACU/LCD Display. (Source: Gamewell-FCI, Northford, CT)

17.4.7* If the intent is to initiate action when smoke/fire threatens a specific object or space, the detector shall be permitted to be installed in close proximity to that object or space.

A.17.4.7 Some applications that do not require full area protection do require detection to initiate action when specific objects or spaces are threatened by smoke or fire, such as at elevator landings that have ceilings in excess of 15 ft (4.6 m) and for protection of fire alarm control units. In high-ceiling areas, to achieve the desired initiation, such as for elevator recall and protection of fire alarm control units (FACUs), detection should be placed on the wall above and within 60 in. (1.52 m) from the top of the elevator door(s) or FACU.

The purpose of the closely installed detector is to indicate a proximate threat to a specific object or space. See A.10.4.5, A.17.4.7, and 21.3.5, which provide detailed discussions on scenarios where ceiling heights exceed 15 ft (4.6 m) in the area of an installed FACU or the elevator lobby. In actual application, these subsections describe what constitutes a "close proximity" smoke detector installation. For the FACU and elevator lobby high ceiling scenarios, smoke detectors within 60 in. (1.52 m) are considered to be in close proximity. Detailed consideration of technical factors in a given space and other scenarios might warrant different positioning rules for detector(s) to achieve a "close proximity" detector installation.

17.5 Requirements for Smoke and Heat Detectors.

As both heat detectors and smoke detectors rely on the fire plume and the ceiling jet, many requirements apply equally to both heat and smoke detectors. These requirements are grouped together in Section 17.5.

17.5.1 Recessed Mounting. Unless tested and listed for recessed mounting, detectors shall not be recessed into the mounting surface.

Both heat and smoke detectors rely on the flow of the ceiling jet to convey the heat and smoke, respectively, to the detector. Recessing detectors that are not tested and listed for recessed mounting would locate the detector out of the prevailing flow of the ceiling jet and would have an adverse effect on the detector's ability to perform as intended. The accompanying Closer Look feature examines why smoke and heat detectors are not permitted to be recessed unless tested and listed for that purpose.

17.5.2* Partitions. Where partitions extend to within 15 percent of the ceiling height, the spaces separated by the partitions shall be considered as separate rooms.

Closer Look

Recessed Mounting

A heat detector must absorb heat from the hot gases of the ceiling jet, as illustrated in Exhibit 17.1, before it can respond. Approximately 92 percent to 98 percent of the heat that a heat detector receives is carried to the detector in the hot air and combustion product gases of the ceiling jet created by the fire. This process is called *convection* or *convective heat transfer*. Note that the velocity, temperature, and smoke concentration are not uniform across the thickness of the ceiling jet. At the surface of the ceiling, the ceiling jet moves more slowly due to frictional losses and is slightly cooler due to heat transfer to the ceiling. A heat detector that is recessed is removed from the flow of air; as a result, the quantity of heat it receives per unit of time is reduced. The heat detector's response slows, allowing the fire to grow larger before it is detected. A heat detector also receives a small percentage of radiated heat. If the detector is recessed, less of this radiated heat energy can strike the detector. If heat detectors are installed recessed into the ceiling, then the system will likely respond more slowly, if at all, than if the heat detectors are mounted as required by the Code.

The effect is the same with smoke detectors. Smoke detectors depend on air movement to convey smoke from the fire to the detector. Usually this air movement is the ceiling jet produced by the fire. Smoke detectors are typically mounted on the ceiling to take advantage of fire plume dynamics and the ceiling jet. However, because of frictional energy loss between the ceiling jet and the ceiling surface, a very thin layer of air immediately beneath the ceiling surface is flowing more slowly than the layer a little farther down. The force that pushes the smoke into the sensing chamber is a function of the ceiling jet velocity. If the velocity at the detector is low, smoke moves into the detector slowly. If a smoke detector is recessed, this more slowly moving air immediately beneath the ceiling surface is the only flow affecting the detector. Because a recessed detector is in a no-flow or low-flow location relative to the ceiling jet it will be very slow to respond — if it responds at all — compared with the same detector mounted on the ceiling surface.

FAQ

What is the reason for the value of 15 percent when considering the effect of partitions?

Research on fire plumes and ceiling jets indicates that the thickness of the ceiling jet under most conditions is approximately 10 percent of the distance from the floor to the ceiling in the fire compartment. The ceiling jet velocity varies with the distance from the ceiling, and the 10 percent depth criterion is the depth above which the majority of the flow occurs. Some flow exists below the upper 10 percent of the floor-to-ceiling height. Once the ceiling jet collides with the walls of the compartment, it forms an upper layer. This layer will increase in thickness as the fire grows. However, during the time a fire alarm system should respond, the 10 percent ceiling jet thickness is generally valid.

The 10 percent number from the research was increased to 15 percent of the floor-to-ceiling height for the requirement. This increase helps to provide for a margin of safety and address the fact that the ceiling jet does not have an abrupt lower boundary. Partitions that are more than 85 percent of the floor-to-ceiling height are expected to interfere with the natural flow of the ceiling jet and retard detector response. Exhibit 17.10 illustrates when a room is considered to be separated by a partition.

In the case of a fire with an established plume, the plume jet is the dominant air mover and produces a ceiling jet. With a small, low-energy fire, normal air currents may be the dominant air mover. The objective is to ensure that the partition does not interfere with the smoke travel across the ceiling to the detector location. This treatment of partitions is very different from the treatment of partitions in NFPA 13, *Standard for the Installation of Sprinkler Systems*, where the principal concern is the discharge pattern of the sprinkler head and the impact of the partition on that discharge pattern and, thus, on the control of the fire.

EXHIBIT 17.10

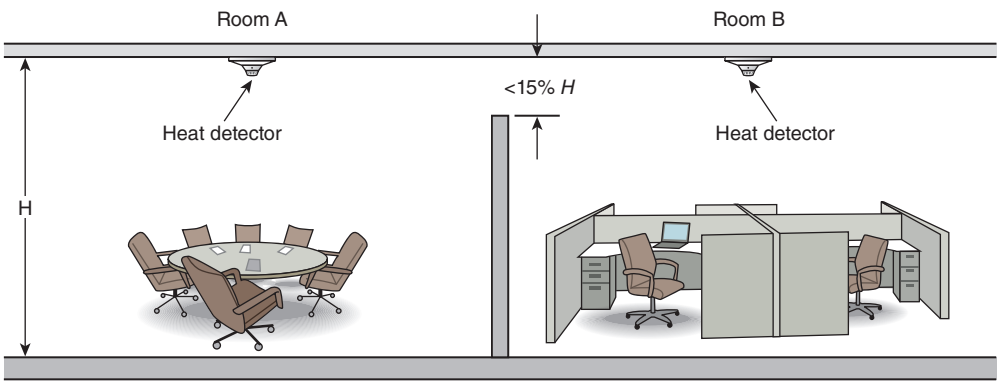

Partitions Extending Higher Than 85 Percent of Floor-to-Ceiling Height, Requiring Addition of Heat Detectors for Each Partitioned-Off Area.

A.17.5.2 This requirement is based on the generally accepted principle that the ceiling jet is approximately 10 percent of the distance from the base of the fire to the ceiling. To this figure, an additional safety factor of 50 percent has been added. Performance-based methods are available to predict the impact of partitions on the flow of smoke to detectors and can be used to substantiate a less restrictive design criterion.

17.5.3* Detector Coverage.

A.17.5.3 The requirement of 17.5.3 recognizes that there are several different types of detector coverage.

Subsection 17.5.3 describes different detection coverage concepts, allowing the designer alternatives for the application under consideration. The extent of detection coverage is generally related to the tacit performance expectations in the relevant building code. These tacit performance expectations can be inferred from the prescribed coverage requirements based on the occupancy.

System Design Tip

Where the locally adopted code is not specific about the type and extent of the automatic detection coverage required, the owner and the designer should consult with the local authority having jurisdiction and establish the type and extent of coverage to be provided. The type of coverage established for the system should be included as a part of the system documentation addressed in Chapter 7.

System Design Tip

When a fire ignites in a building compartment that is not equipped with detection, the smoke and/or heat must travel a longer distance before it affects a detector that can initiate an alarm signal. This scenario usually results in a substantial — and often critical — delay in fire detection. This delay allows the fire time to grow much larger before detection than would have been the case if detection were installed in the compartment of fire origin.

The Code does not specify the type of detection (heat, smoke, flame, etc.) required for a specific type of occupancy. The relevant building code or the performance objectives of the owner establish the type and extent of required coverage. If the governing, adopted building code does not dictate the type of detection or its required coverage, then the designer should develop the detection strategy (type of detection and spacing) based on speed of response, environmental conditions, output functions to be initiated, and other project or loss control objectives. See 17.6.1.1, 17.7.1.1, and 17.8.1.1.

System Design Tip

17.5.3.1* Total (Complete) Coverage. Where required by other governing laws, codes, or standards, and unless otherwise modified by 17.5.3.1.1 through 17.5.3.1.5, total coverage of a building or a portion thereof, shall include all rooms, halls, storage areas, basements, attics, lofts, spaces above suspended ceilings, and other subdivisions and accessible spaces.

With regard to the total coverage detection approach, 17.5.3.1 was revised for the 2016 edition of the Code to eliminate the references to closets, elevator shafts, enclosed stairways, dumbwaiter shafts, and chutes. These types of spaces are unique for different buildings and are subject to special detection requirements; they should not be subject to requirements for total coverage. Closets are generally small, limited-content areas that can be served by other total coverage detectors in the main occupied space. The factors affecting stairs can be numerous depending on the height of the stair, compartmentation of the stair, fuel load or lack of fuel load within the stair, and so forth. Dumbwaiter shafts and chutes are unique vertical spaces that require special consideration consistent with design objectives. See A.17.5.3.1 for additional guidance.

FAQ What does "total coverage" mean?

The concept of total, or complete, detector coverage is effectively defined in 17.5.3.1. The term *total coverage* means that detectors are installed in all accessible compartments or spaces. Specifically, the term *accessible spaces* (see 3.3.4) applies to spaces or concealed areas of construction that can be entered via openable panels, doors, hatches, or other readily movable elements such as lift-out ceiling tiles in a suspended ceiling grid. The underlying premise is that if an enclosed compartment is accessible, it might be used to store combustible materials. This requirement is parallel to that of Section 4.1 of NFPA 13, as follows:

NFPA 13 (2019)

4.1 Level of Protection.

4.1.1 A building, where protected by an automatic sprinkler system installation, shall be provided with sprinklers in all areas except where specific sections of this standard permit the omission of sprinklers.

FAQ Do detectors connected to a suppression system releasing panel satisfy the requirement for total coverage in the protected area, or are additional detectors connected directly to the building FACU necessary?

Alarm and supervisory signals generated at the releasing service FACU must be annunciated at a protected premises FACU, in accordance with 23.8.5.10. If the releasing control unit alarm signal is used to initiate the general protected premises alarm response, the releasing system detectors can be used to satisfy the total coverage requirement.

A.17.5.3.1 The degree of detection coverage is generally a design issue. Usually the design of detection correlates with the smoke compartmentation of the building.

Vertical spaces such as stairways and elevator shafts are often difficult design challenges. For elevator shafts, Section 21.4 provides design criteria to achieve correlation with ANSI/ASME A17.1, *Safety Code for Elevators and Escalators*.

Stairways can be equipped with smoke detection but the number and location are determined by the design of the stairway.

Generally at least one smoke detector should be located at the top of the stairway. Additional detectors should be located on additional floors to achieve design objectives.

17.5.3.1.1 Where inaccessible areas are constructed of or contain combustible material, unless otherwise specified in 17.5.3.1.2, they shall be made accessible and shall be protected by a detector(s).

Under the concept of total coverage, detectors must be placed in all compartments. An inaccessible compartment that contains combustible material is a potential fire location and must be equipped

with detection if total coverage is to be provided. Since all detectors must be accessible, the inaccessible compartment that contains combustible materials must be made accessible. Note that other sections of the Code prohibit the installation of smoke detection under certain situations such as elevator hoistways (see 21.3.6).

17.5.3.1.2 Detectors shall not be required in combustible blind spaces if any of the following conditions exist:

(1) Where the ceiling is attached directly to the underside of the supporting beams of a combustible roof or floor deck.
(2) Where the concealed space is entirely filled with a noncombustible insulation. (In solid joist construction, the insulation shall be required to fill only the space from the ceiling to the bottom edge of the joist of the roof or floor deck.)
(3) Where there are small concealed spaces over rooms, provided that any space in question does not exceed 50 ft^2 (4.6 m^2) in area.
(4) In spaces formed by sets of facing studs or solid joists in walls, floors, or ceilings, where the distance between the facing studs or solid joists is less than 6 in. (150 mm).

Combustible blind spaces include a number of boxed-in spaces that are common in stud-wall, curtain-wall, and frame construction. These spaces are in place because of construction or where renovations have created void spaces with no access, which prevents the storage of combustible materials. If a space is inaccessible, the probability of ignition becomes extremely remote. Consequently, 17.5.3.1.2 excludes these specific spaces from the total coverage requirement.

17.5.3.1.3 Detectors shall not be required below open grid ceilings if all of the following conditions exist:

(1) Openings of the grid are ¼ in. (6.4 mm) or larger in the least dimension.
(2) Thickness of the material does not exceed the least dimension.
(3) Openings constitute at least 70 percent of the area of the ceiling material.

All three criteria must be met for a compartment or room with an open grid ceiling to qualify for an exemption for detectors under the concept of total coverage. Where true open grid ceilings complying with the criteria of 17.5.3.1.3 exist, the ceiling does not represent a significant barrier to the movement of smoke and fire gases. With many suspended ceilings, the grid is not sufficiently open to allow smoke to travel through the grid, and the compartment does not comply with the criteria of 17.5.3.1.3. Furthermore, the above-ceiling space often contains combustibles, resulting in the need for detection both above and beneath the ceiling plane where total coverage is required.

FAQ Are detectors required below cloud or canopy ceilings?

System Design Tip

Spaces that have cloud or canopy ceilings and that also require the installation of ceiling-level detectors might require a performance-based analysis to determine if the fire detection objectives are met. Cloud ceilings are partial or limited-area ceiling surfaces installed below the formal or structural ceiling of a room or space to enhance the design aesthetics or acoustical performance of the space. Depending on the type of detectors used and the extent of the cloud or canopy ceiling, there might or might not be delays in detection caused by the interruption of the fire/smoke plume as it rises to the detectors located at the formal or structural ceiling. If there are significant delays or interference, it might be necessary to install additional detectors below the cloud or canopy ceilings.

17.5.3.1.4* Where concealed accessible spaces above suspended ceilings are used as a return air plenum meeting the requirements of NFPA 90A detection shall be provided in one of the following means:

(1) Smoke detection shall be provided in accordance with 17.7.4.2, or
(2) Smoke detection shall be provided at each connection from the return air plenum to the central air-handling system.

Above-ceiling spaces are referred to in *NFPA 70* as "other spaces used for environmental air." Where these above-ceiling, return air spaces meet the requirements of NFPA 90A, *Standard for the Installation of Air-Conditioning and Ventilating Systems*, and are equipped with smoke detection at each connection to the central air-handling system, detectors are not required throughout the above-ceiling space. The relevant sections of NFPA 90A limit the types and quantities of combustible materials that can be included within the above-ceiling return air space. This exemption relies on the construction limitations and the limitations on combustibles imposed by NFPA 90A.

Detectors in the above-ceiling space do *not* supplant detectors installed on the compartment ceiling for general area protection — area detection at the ceiling plane is still required. Also see the commentary following 17.5.3.1.5(4).

A.17.5.3.1.4 Total coverage requires that a fire above the suspended ceiling be detected. Detector spacing and location for above ceiling spaces are addressed in 17.7.3.5.2. If that above-ceiling space is used as an air return plenum, this detection can be provided either by smoke detectors placed in accordance with 17.7.4.2 or where the air leaves the smoke compartment in accordance with 17.7.5.4.2.2.

17.5.3.1.5 Detectors shall not be required underneath open loading docks or platforms and their covers and for accessible underfloor spaces if all of the following conditions exist:

(1) Space is not accessible for storage purposes or entrance of unauthorized persons and is protected against the accumulation of windborne debris.
(2) Space contains no equipment such as steam pipes, electric wiring, shafting, or conveyors.
(3) Floor over the space is tight.
(4) No flammable liquids are processed, handled, or stored on the floor above.

All the criteria of 17.5.3.1.5 must exist if detectors are to be omitted from underneath open loading docks or platforms where total coverage is to be provided for a facility.

Given the preceding review and discussion of the terms *total coverage* and *accessible spaces*, and the exceptions related to total coverage, several scenarios can be illustrated to further explain how total coverage is to be implemented when it is required by another building code or standard.

Exhibit 17.11 illustrates total coverage, Scenario 1. This scenario relates to 17.5.3.1, 17.5.3.1.1, and 17.5.3.1.2 where combustible concealed spaces are present. Exhibit 17.11 illustrates a combustible concealed space created by a wood truss structure. To accomplish total coverage in Scenario 1, detectors are shown installed below the ceiling and in the concealed space. If the ceiling was intended to be a hard ceiling preventing entry into the combustible concealed space, then access panels or other openings are required to be installed to permit access to the detectors in the combustible concealed space for inspection, testing, and maintenance.

Exhibit 17.12 illustrates total coverage, Scenario 2, which considers a steel structural system that forms an isolated noncombustible concealed space. Isolated and with no easy entry possible, this concealed space does not require detectors to be installed. However, the occupied space below the ceiling is required to have detectors installed, as well as an adjacent mechanical space. In Scenario 2, the ceiling provides no access to the concealed area and, therefore, there is no risk of storage or other combustibles migrating into the concealed space.

Exhibit 17.13 illustrates total coverage, Scenario 3, which addresses a situation similar to Scenario 2. However, in Scenario 3 is a suspended ceiling that provides access into the noncombustible concealed space, where there is a potential for combustibles being stored or placed above the suspended ceiling. To meet the criteria for total coverage, detectors are required to be installed in the concealed space.

Exhibit 17.14 addresses the requirements of 17.5.3.1.4 related to concealed spaces serving as air-handling plenums, which are diagrammed as total coverage in Scenario 4. This scenario illustrates how total coverage can be achieved when an air return plenum has detection in the connection(s) to a central air-handling system. In this case, the plenum must be an NFPA 90A–compliant return air space, which effectively means combustibles are limited. However, if a fire incident occurs in the plenum, it can

EXHIBIT 17.11

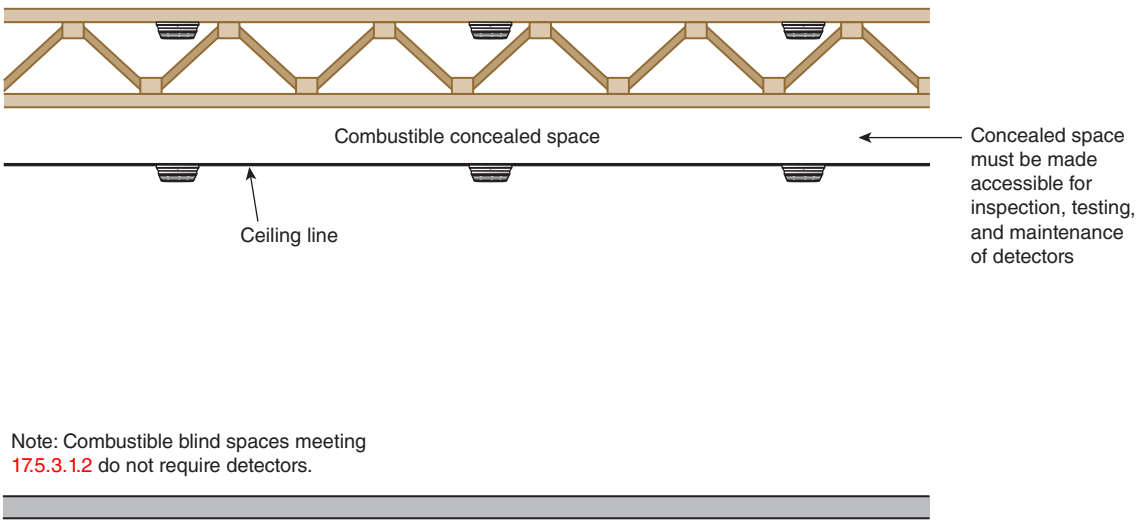

Total Coverage — Scenario 1. (Source: JENSEN HUGHES, Lincolnshire, IL)

EXHIBIT 17.12

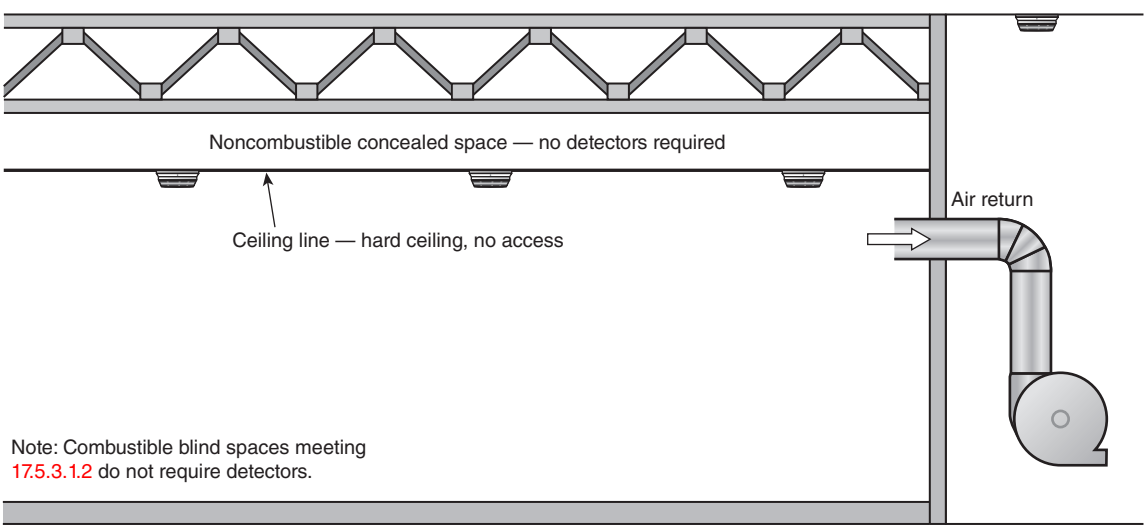

Total Coverage — Scenario 2. (Source: JENSEN HUGHES, Lincolnshire, IL)

EXHIBIT 17.13

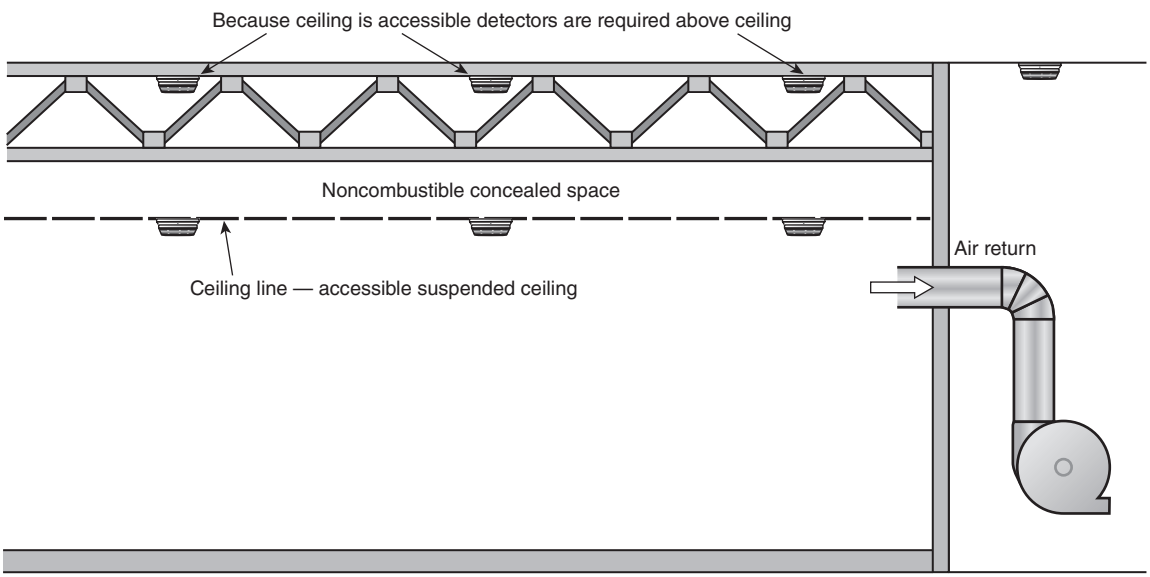

Total Coverage — Scenario 3. (Source: JENSEN HUGHES, Lincolnshire, IL)

EXHIBIT 17.14

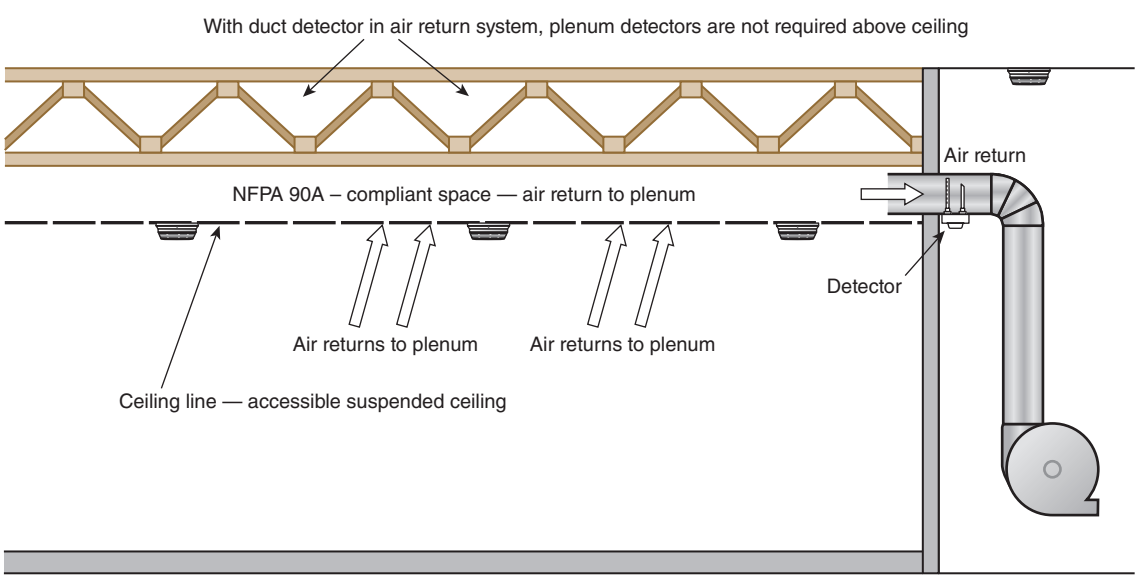

Total Coverage — Scenario 4. (Source: JENSEN HUGHES, Lincolnshire, IL)

be handled by the transport of heat/smoke to detector(s) in the connection(s) to the air handler. With this type of plenum detection scheme, detectors are not deemed necessary in the concealed plenum space ceiling area.

Exhibits 17.11 to 17.14 address the four basic total coverage scenarios; however, two additional variations are possible with smoke compartments using return air system arrangements. These additional two scenarios are discussed later in the commentary following 17.7.5.4.2.2.

17.5.3.2* Partial or Selective Coverage. Where other governing laws, codes, or standards require the protection of selected areas only, the specified areas shall be protected in accordance with this Code.

A.17.5.3.2 If there are no detectors in the room or area of fire origin, the fire could exceed the design objectives before being detected by remotely located detectors. When coverage other than total coverage is required, partial coverage can be provided in common areas and work spaces such as corridors, lobbies, storage rooms, equipment rooms, and other tenantless spaces. The intent of selective coverage is to address a specific hazard only.

Where a specific area is to be protected, all points within that area should be within 0.7 × the adjusted detector spacing for spot-type detectors as required by 17.6.3 and 17.7.3.2. Note that an area does not necessarily mean an entire room. It is possible to provide properly spaced detectors to provide detection for only part of a room. Similarly, the Code permits protection of a specific hazard. In that case, detectors within a radius of 0.7 × the adjusted detector spacing from the hazard provide the required detection. An example of protection of specific risk is the smoke detector required by Section 21.3 to be within 21 ft (6.4 m) of an elevator, where elevator recall is required.

It should also be noted that fire detection by itself is not fire protection. Also, protection goals could be such that detection being provided for a specific area or hazard might require a form of total coverage for that particular area or hazard. That is, it might be necessary to provide detectors above suspended ceilings or in small closets and other ancillary spaces that are a part of, or an exposure to, the area or hazard being protected.

FAQ

What is meant by the terms *partial coverage* and *selective coverage*?

Many locally adopted building codes require an automatic fire alarm system in all corridors, foyers, common spaces, mechanical equipment rooms, and other tenantless spaces. Where the building code itemizes the portions of a building required to be equipped with smoke detection, it is effectively establishing a requirement for partial coverage. Selective coverage addresses only a specific hazard.

Partial or selective coverage permits the protection of the selected compartments or areas without requiring additional detection in other compartments or areas of the building. However, the detectors used for this coverage must be installed in conformance with the appropriate prescriptive spacing and location. If the prescriptive criteria result in an excessive equipment burden, performance-based design methods can be used to tailor the detection system design to a specific performance objective.

The building owner or operator must understand that, although partial or selective coverage might fulfill a minimum compliance requirement, it does not necessarily provide sound fire protection. A fire alarm system cannot be expected to detect a fire in a timely manner if detectors are not in the compartment of fire origin.

Building codes often require smoke detectors in a corridor without requiring detection in the rooms served by that corridor. The tacit objective served by that requirement is to notify building occupants that the tenability of the route to the means of egress is compromised by smoke. The detectors are not there to detect fires in the rooms served by the corridor. Where smoke detectors are required in a corridor but not in the rooms served by that corridor, a substantial delay is to be expected in detecting a fire in one of the rooms, especially if the door to the room of fire origin is closed. When a fire ignites in a room, it can grow undetected until it becomes sufficiently large to pressurize the room and force smoke out past the closed door into an adjoining compartment that is equipped with detectors. Such a scenario can result in a substantial delay in warning occupants and initiating response to the fire. Factors, such as doors, ceiling irregularities, ventilation supplies and returns, and distance, can retard the flow of smoke and heat toward a building compartment equipped with detection. In addition, where selective coverage is provided only for a specific hazard, it will provide little protection for personnel or assets outside the vicinity of the detector(s), depending on the circumstances.

System Design Tip

Where any detection coverage other than total is used in a system design, the designer should be aware that the interconnecting wiring between the devices, appliances, and the FACU will often pass through unprotected areas of the building. The designer should consider the potential for thermal impact of a fire on the detection system wiring before the initiation of a fire alarm signal. The designer should consider protecting the fire alarm system wiring in those areas through which fire alarm system wiring passes. Generally, installation in a fire-rated enclosure or using fire-rated circuit integrity cable can provide important protection.

17.5.3.3* Nonrequired Coverage.

The term *nonrequired* is not the same as the terms *supplementary* and *partial* or *selective* (see 17.5.3.2). Refer to the definitions of the terms *nonrequired* and *supplementary* in 3.3.180 and 3.3.296, along with their associated commentary.

The subparagraphs of 17.5.3.3 address circumstances in which fire detection serves purposes or achieves objectives not established by a locally adopted, minimum-compliance building or fire code. Often, a user has specific fire protection goals or objectives that can be achieved only by using automatic fire detection. For example, a building operator might have a mission continuity objective and intends to use a special extinguishing system, actuated by automatic detection, to achieve that objective. Such a system is a nonrequired system because it is installed at the option of the operator and not because of a building or fire code requirement.

The language of these subparagraphs provides the necessary latitude in design for systems that are being installed to meet an objective other than the minimum requirements for property protection and life safety provided in the local building code. Although the requirements in 17.5.3.3.1 and 17.5.3.3.2 are specified in prescriptive terms, designs for some objectives might be best achieved with the performance-based design option. The process of performance-based design involves a documented formal analysis that serves as the basis for design decisions. This process is outlined in Annex B and "Performance-Based Design and Fire Alarm Systems" at the end of Annex B. Also see the commentary following Section 17.3.

System Design Tip

Where the building owner or system designer elects to install fire detection systems or components that are not required by the relevant building codes, the systems still must be installed in accordance with the minimum-compliance criteria of this Code.

A.17.5.3.3 The requirement of 17.5.3.3 recognizes there will be instances where, for example, a facility owner would want to apply detection to meet certain performance goals and to address a particular hazard or need, but that detection is not required. Once installed, of course, acceptance testing, annual testing, and ongoing maintenance in accordance with this Code is expected. The intent of this section is to allow the use of a single detector, or multiple detectors provided for specific protection, with spacing to meet specific fire safety objectives as determined in accordance with 17.6.1.1 and 17.7.1.1.

17.5.3.3.1 Detection installed for reasons of achieving specific fire safety objectives, but not required by any laws, codes, or standards, shall meet all of the requirements of this Code, with the exception of the prescriptive spacing criteria of Chapter 17.

FAQ What requirements apply to installations of nonrequired coverage?

Even where detection is not required by some applicable law, code, or standard, detection must still comply with all the requirements of *NFPA 72*, including the specific detector location, installation, operation, and maintenance requirements for the type of detector used. This requirement helps to

ensure that purchasers of nonrequired systems receive systems that work. Decades of experience in fire alarm system design, installation, and maintenance have demonstrated that compliance with the criteria in this Code results in systems that have a high probability of providing consistent, reliable service. The requirement includes an exception that permits the use of detector spacing that is different from the spacing specified in the prescriptive sections of this Code. With some system objectives, the prescriptive spacing is not necessary to achieve the intended performance of the nonrequired system.

Whenever any system is designed, 17.6.1.1, 17.7.1.1, and 17.8.1.1 require that the objectives for that system be stipulated in the design documentation. Consequently, these paragraphs apply to nonrequired systems. The selected detection spacing must be substantiated in the design documentation to show that design objectives for the system will be satisfied.

System Design Tip

17.5.3.3.2 Where nonrequired detectors are installed for achieving specific fire safety objectives, additional detectors not necessary to achieve the objectives shall not be required.

Generally, the objective of nonrequired coverage is to attain an early warning of a fire involving a specific asset but not necessarily other portions of the compartment. Under these circumstances, providing detection for the portion of the compartment where the asset is located, rather than throughout the entire compartment or building, might be sufficient.

Achieving a specific fire safety objective could require the use of special application detectors that are suitable for use in a challenging environment or hazard configuration. Exhibits 17.15 and 17.16 represent special application detection devices.

EXHIBIT 17.15

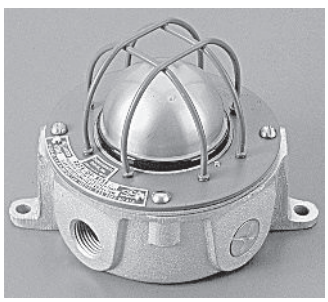

Explosionproof Spot-Type Heat Detector. (Source: Kidde-Fenwal, Ashland, MA)

17.6 Heat-Sensing Fire Detectors.

The relationship between heat and temperature must be understood if heat-sensing detectors are to be applied properly. Heat is energy and is quantified in terms of an amount usually measured in British thermal units (Btu) or joules (J). Temperature is a measure of the quantity of heat in a given mass of material and is measured as an intensity, measured in degrees Fahrenheit or Celsius.

The majority of the heat flowing into or absorbed by a heat detector is from the hot gases that make up the ceiling jet. This process is called *convective heat transfer*. A much smaller portion of the heat absorbed by a heat detector is transferred by radiation, a process called *radiant heat transfer.* Heat detectors operate on one or more of three principles: fixed-temperature, rate compensation, and rate-of-rise.

Most heat detectors are devices that change in some way when the temperature at the detector achieves a particular level or set point. These detectors are classified as fixed-temperature heat detectors. (See 3.3.70.7.) Another type of detector adjusts its set point temperature in response to the rate of increase in the temperature. These heat detectors are classified as rate compensation heat detectors. (See 3.3.70.18.) Other detectors respond to the rate of temperature change and are classified as rate-of-rise heat detectors. (See 3.3.70.19.)

Each principle has its performance advantages and can be applied in either of two general types of heat detectors: a spot-type detector (3.3.70.22) or a line-type detector (3.3.70.11). Spot-type detectors occupy a specific spot or point, while line-type detectors are linear and extend over a distance, sensing temperature along their entire length.

A number of different technologies can be used to detect the heat from a fire. The designer must be careful not to confuse the terms *type* and *principle* with *technology*, which is the method used to achieve heat detection.

Exhibit 17.17 illustrates two types of heat detector circuits on a single FACU.

Exhibits 17.18 through 17.23 illustrate various examples of typical heat detectors. A precise definition and explanation of the mode of operation for each type of heat detector can be found in 3.3.70.

EXHIBIT 17.16

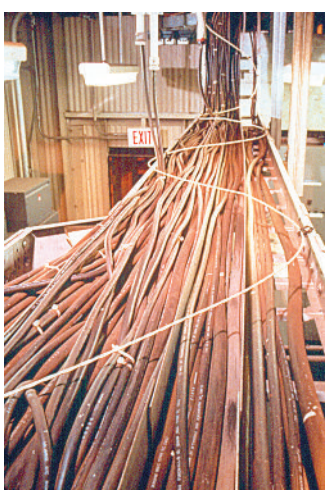

Line-Type Heat Detector Installed in a Cable Tray Application. (Source: The Protectowire Co., Inc., Pembroke, MA)

System Design Tip

EXHIBIT 17.17

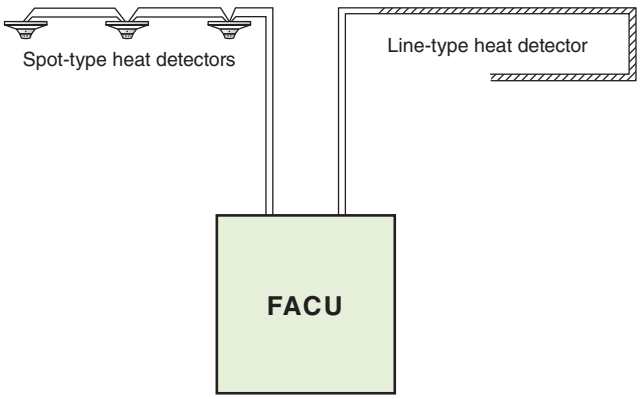

Two Types of Heat Detectors: Spot-Type and Line-Type.

EXHIBIT 17.18

Electronic Spot-Type Heat Detector. (Source: System Sensor Corp., St. Charles, IL)

EXHIBIT 17.19

Spot-Type Fixed-Temperature Heat Detector. (Source: System Sensor Corp., St. Charles, IL)

EXHIBIT 17.20

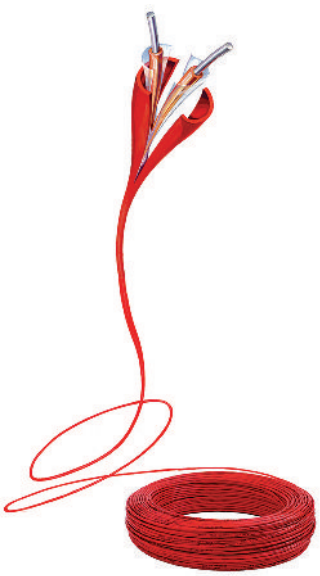

Line-Type Heat Detector. (Source: The Protectowire Co., Inc., Pembroke, MA)

EXHIBIT 17.21

Rate Compensation Heat Detector — Horizontal Mounting. (Source: Kidde-Fenwal, Ashland, MA)

EXHIBIT 17.22

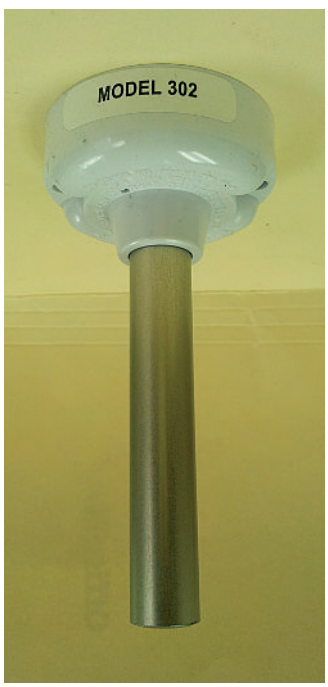

Rate Compensation Heat Detector — Vertical Mounting. (Source: Thermotech Inc., Ogden, UT)

EXHIBIT 17.23

Spot-Type Combination Rate-of-Rise and Fixed-Temperature Heat Detector. (Source: Kidde-Fenwal, Ashland, MA)

17.6.1 General.

17.6.1.1* The heat detection design documentation shall state the required performance objective of the system.

A.17.6.1.1 The performance objective statement should describe the purpose of the detector placement and the intended response of the fire alarm control unit to the detector activation.

This statement can include a narrative description of the required response time of the detectors, a narrative of the sequence of operations, a tabular list of programming requirements or some other method.

The performance objective of a fire detection system is usually expressed in terms of time and the size fire the system is intended to detect, measured in British thermal units per second (Btu/sec) or kilowatts (kW). Typically, the fire alarm system designer does not establish this criterion. It is usually obtained from the design documentation prepared by the designer responsible for the strategy of the structure as a whole. Where a prescriptive design is being provided, this requirement is fulfilled by stating in the design documentation that the design conforms to the prescriptive provisions of this Code.

FAQ

When is a statement of the detection system performance objective required to be included in the design documentation?

System Design Tip

The designer has two routes in the design of a fire detection system using heat detectors. One route is the prescriptive process, in which the designer follows the prescribed spacing and location criteria in the Code. The second route is to use the performance-based design methods outlined in Annex B. Also see the commentary following Section 17.3. In either case, the performance objective of the system must be stated in the heat detection design documentation.

17.6.1.2 Designs not in accordance with 17.6.1.3 shall be deemed prescriptive designs and shall be designed in accordance with the prescriptive requirements of this chapter.

17.6.1.3* Performance-based designs shall be executed in accordance with Section 17.3.

A.17.6.1.3 In a performance-based design environment, the performance objectives for the fire alarm system are not established by the fire alarm system designer.

A fire protection strategy is developed to achieve those goals. General performance objectives are developed for the facility. These general objectives give rise to specific performance objectives for each fire protection system being employed in the facility. Consequently, the performance objectives and criteria for the fire alarm system are part of a much larger strategy that often relies on other fire protection features, working in concert with the fire alarm system to attain the overall fire protection goals for the facility.

In the performance-based design environment, the designer uses computational models to demonstrate that the spacing used for automatic fire detectors connected to the fire alarm system will achieve the objectives established by the system, by showing that the system meets the performance criteria established for the system in the design documentation. Consequently, it is imperative that the design objectives and performance criteria to which the system has been designed are clearly stated in the system documentation.

System Design Tip

A performance-based design as described in A.17.6.1.1 and A.17.6.1.3 is a holistic process that leads to a design from a starting point of stated, agreed-on, quantified objectives. In most heat detection system designs, the objective is to detect a fire before it exceeds a specified size, assuming a growing fire. Annex B and "Performance-Based Design and Fire Alarm Systems" at the end of Annex B provide an overview of the process and the methods employed in that process.

N **17.6.1.4** Heat sensing fire detectors shall be listed in accordance with applicable standards such as ANSI/UL 521, *Standard for Heat Detectors for Fire Protective Signaling Systems*.

One recognized standard for listing of heat detectors is ANSI/UL 521, *Standard for Heat Detectors for Fire Protective Signaling Systems*; however, Chapter 17 would permit the use of heat detectors listed to other

recognized, authoritative standards, such as FM Approval Standard 3210, *Heat Detectors for Automatic Fire Alarm Signaling*.

17.6.1.5* Spot-type heat detectors shall include in their installation instructions, technical data, and listing documentation the operating temperature and response time index (RTI) as determined by the organization listing the device.

A.17.6.1.5 In order to predict the response of a heat detector using current fire modeling programs and currently published equations describing plume dynamics, two parameters must be known: operating temperature and response time index (RTI). The RTI is the quantification of the rate of heat transfer from the ceiling jet to the detector sensing element per unit of time, expressed as a function of ceiling jet temperature, ceiling jet velocity, and time. Spot-type heat detectors manufactured prior to July 1, 2008, were not required to be marked with an RTI.

Two performance parameters must be quantified to predict the operation of a heat detector for a fire scenario in a given compartment or building environment: set point temperature and response time index (RTI). Set point temperature is the temperature at which the detector is designed to operate. RTI is a measure of the speed of the detector's response and is quantified during the listing evaluation. These two operating parameters are the result of the physical design of the detector.

17.6.2 Temperature.

System Design Tip

In general, where a heat detector with a lower operating temperature is used, the system will produce a faster response to a fire. However, when the detector operating temperature is too close to the maximum ambient temperature, the probability of a nuisance alarm increases. The prudent designer makes certain that the heat detector operating temperature stipulated is consistent with the requirements of 17.6.2.3 and the criteria in Table 17.6.2.1.

Δ **17.6.2.1 Classification.** Heat-sensing fire detectors of the fixed-temperature or rate-compensated, spot type shall be classified as to the temperature of operation in accordance with Table 17.6.2.1.

Δ ***TABLE 17.6.2.1*** *Temperature Classification and Color Code for Heat-Sensing Fire Detectors*

Temperature Classification	*Temperature Rating Range*		*Maximum Ceiling Temperature*		*Color Code*
	°F	*°C*	*°F*	*°C*	
Low	100–134	38–56	80	28	Uncolored
Ordinary	135–174	57–79	115	47	Uncolored
Intermediate	175–249	80–121	155	69	White
High	250–324	122–162	230	111	Blue
Extra high	325–399	163–204	305	152	Red
Very extra high	400–499	205–259	380	194	Green
Ultra high	500–575	260–302	480	249	Orange

Spot-type heat detectors are the most widely used type of heat detector for general purpose use. Spot-type heat detectors of the fixed-temperature or rate compensated design are required to be classified as to the temperature of operation.

FAQ

What factors must be considered in the selection of a heat detector temperature classification?

Table 17.6.2.1 presents specific criteria for the nominal temperature range of a heat detector versus the maximum expected ceiling temperature for the location of the detector. This relationship is consistent with 17.6.2.3, which requires that the designer selects a detector temperature classification that provides at least a 20°F (11°C) difference between the temperature classification of the detector and the maximum expected ambient ceiling temperature. This minimizes the likelihood of nuisance alarms due to normal fluctuations in the ambient environment. As discussed in A.17.6.2.3, the detector selected should not have a detector temperature classification higher than necessary, because the higher the temperature classification, the longer the detector will take to initiate an alarm — a larger fire will be needed to produce the higher temperature at the detector location.

System Design Tip

There are special circumstances in which a heat detector with an unusually high temperature rating [i.e., greater than 20°F (11°C) above maximum ceiling temperature] might be selected. An example of such a circumstance would be where heat detectors are used to trigger roof vents in a sprinklered building. In this situation, a prematurely open vent could allow heat to escape before the sprinklers activate. The delayed activation of the high temperature detectors, and therefore the roof vents, ensures proper sprinkler operation. To select an appropriate temperature rating in these special circumstance, the designer must consider the detector operating temperature, the maximum expected ambient temperature, and coordination with other safety equipment operations.

System Design Tip

17.6.2.2 Marking.

17.6.2.2.1 Color Coding.

17.6.2.2.1.1 Heat-sensing fire detectors of the fixed-temperature or rate-compensated, spot type shall be marked with a color code in accordance with Table 17.6.2.1.

17.6.2.2.1.2 If the overall color of a heat-sensing fire detector is the same as the color code marking required for that detector, one of the following arrangements, applied in a contrasting color and visible after installation, shall be employed:

(1) Ring on the surface of the detector
(2) Temperature rating in numerals at least ⅜ in. (9.5 mm) high

Color coding is the required method of identifying a temperature rating. Unified color coding allows the temperature rating of a ceiling-mounted heat detector to be identified from the floor, which helps facilitate inspections. If the overall color of the heat detector is the same as the required color code, two options are provided for marking. Most often, the manufacturer marks the temperature rating on the detector.

17.6.2.2.2 Operating Temperature.

17.6.2.2.2.1 Heat-sensing fire detectors shall be marked with their listed operating temperature.

17.6.2.2.2.2 Heat-sensing fire detectors where the alarm threshold is field adjustable shall be marked with the temperature range.

Addressable/analog heat detectors permit the designer to adjust the alarm threshold temperature at the FACU and select a unique threshold temperature based on an analysis of the compartment and the fire hazard. An example of an addressable heat detector is shown in Exhibit 17.24. Such devices can be appropriate for sensing fast, flaming fires in those environments where smoke detectors might not function properly. A fixed color code would be meaningless for this technology. Where addressable/analog technology is used, an alternative means for facilitating inspection should be in place.

System Design Tip

EXHIBIT 17.24

Addressable Heat Detector. (Source: Edwards, Mebane, NC)

17.6.2.2.2.3 Spot-type heat detectors shall also be marked with their RTI.

RTI is a measure of the speed with which heat can flow into the detector and raise the temperature of the heat-sensing component. RTI can be thought of as a measure of the sensitivity of the heat-sensing element responding to rising temperature. Heat detectors generally exhibit RTIs with values less than 100, with 10 indicating a more rapid response than 100. Small differences in the numerical value of RTI represent only small differences in response time. A heat detector with an RTI of 15 is not significantly faster than one with an RTI of 16. However, a heat detector with an RTI of 5 will respond substantially faster than one with an RTI of 50, when all other factors affecting response are held constant.

The response time of a heat detector to a given fire in a given compartment can be predicted only if both the operating temperature and the RTI are known. The computational method for predicting heat detector response is outlined in Annex B with design examples provided in B.3.3. RTI is measured in units of $sec^{1/2}/m^{1/2}$ — the computational method that uses RTI requires that only SI units be employed. The recognized test method for determining RTI is the "plunge test" as outlined in FM Approval Standard 3210. See the commentary following 3.3.251 and Exhibit 3.41.

17.6.2.3* Ambient Ceiling Temperature.

This minimum temperature difference between the highest expected ceiling temperature and the temperature set point of the detector is to prevent nuisance alarms due to variations in the ambient temperature. A detector with a higher set point temperature will allow the fire to grow larger before an alarm is achieved. A detector should be selected that has a set point temperature higher than, but as close as practical to, the requirement of 17.6.2.3.

A.17.6.2.3 Detectors should be selected to minimize this temperature difference in order to minimize response time. However, a heat detector with a temperature rating that is somewhat in excess of the highest normally expected ambient temperature is specified in order to avoid the possibility of premature operation of the heat detector to non-fire conditions. Heat-sensing fire detectors of a low temperature classification per Table 17.6.2.1 are intended only for installation in areas where the ambient temperature is controlled.

N **17.6.2.3.1** Detectors having fixed-temperature or rate-compensated elements shall be selected in accordance with Table 17.6.2.1 for the maximum expected ambient ceiling temperature.

N **17.6.2.3.2** The temperature rating of the detector shall be at least 20°F (11°C) above the maximum expected temperature at the ceiling.

17.6.3 Location and Spacing.

Subsection 17.6.3 prescribes the proper location and spacing of heat detectors for general purpose, open area protection. The distance between the fire and the nearest heat detector establishes the response time of the fire detection system. The hot combustion product gases must rise to the ceiling plane and then move horizontally across the ceiling to the detector location. Detectors that are closer to the fire will give a more rapid response. Detectors are placed according to a defined geometric spacing. The smaller the spacing, the more rapid the anticipated response of the system.

Another factor that affects response time is the shape of the ceiling. Smooth ceilings allow the ceiling jet gases to flow without obstruction from the fire toward the detectors. Joists, beams, or other downward projecting features on the ceiling will impede the flow of the ceiling jet gases and increase the time needed for the hot gases to reach the first detector, delaying system response. If joists and beams are present in the compartment, then the detector spacing must be reduced to compensate for the change in response time due to the construction features.

17.6.3.1 Smooth Ceiling.

17.6.3.1.1* Spacing. One of the following requirements shall apply:

(1) The distance between detectors shall not exceed their listed spacing, and there shall be detectors within a distance of one-half the listed spacing, measured at right angles from all walls or partitions extending upward to within the top 15 percent of the ceiling height.

(2) All points on the ceiling shall have a detector within a distance equal to or less than 0.7 times the listed spacing (0.7*S*).

When detectors need to be installed throughout a large area that uses partial height walls or partitions, the spacing arrangement needs to consider the extent of the height of the walls/partitions. If the walls/partitions extend upward to within 15 percent of the ceiling height as shown in Exhibit 17.25, then a detector is required on each side of the wall/partition as if they extend to the full height of the ceiling. If the clearance is greater than 15 percent, then there is clearance for the free flow of smoke and heat across the tops of the partial height walls/partitions, and normal detector spacing requirements apply as if no partitions exist.

The number of detectors necessary for a given application also depends on the ceiling height, the type of ceiling (whether it has exposed joists or beams), and other features that may affect the flow of air or the accumulation of heat from a fire. All these factors are addressed in the spacing design requirements that are provided in 17.6.3.

FAQ What is the basis of the spacing factor, *S*, for heat detectors?

The number of detectors required is a function of the spacing factor, *S*, of the chosen detector. *S* is established through a series of fire tests conducted in the course of the detector listing. The spacing approximates the relative sensitivity of the detector. The accompanying Closer Look feature examines how a fire test is used to determine the spacing factor.

Closer Look

How Fire Tests Are Used to Determine the Spacing Factor

The spacing derived from the fire tests relates the response of the heat detector to the response of a specially chosen 160°F (71.1°C) automatic sprinkler head. The fire test room has a ceiling height of 15 ft 9 in. (4.8 m) and has no airflow. The test fire is situated at the center of a square array of the test sprinkler heads, installed on 10 ft × 10 ft (3 m × 3 m) centers. This arrangement places the centerline of the test fire 7.07 ft (2.2 m) from the test sprinklers.

Heat detectors are mounted in square arrays that are centered about the test fire with progressively increased spacing. See Figure A.17.6.3.1.1(c). The fire is approximately 3.0 ft (0.9 m) above the floor and consists of a number of pans of an ethanol/methanol mixture yielding an output of approximately 1138 Btu/sec (1200 kW). The height of the test fire and the fire area are adjusted to produce a time versus temperature curve at the test sprinklers that falls within the envelope established for the test and causes the activation of the test sprinkler at 2 minutes ± 10 seconds. The greatest detector spacing that produces an alarm signal before a test sprinkler actuates becomes the listed spacing for the heat detector.

With this method of measuring heat detector performance, heat detector response is defined relative to the distance at which it could detect the same fire that fused the test sprinkler head in 2 minutes ± 10 seconds. For example, a heat detector installed on a 50 ft × 50 ft (15.2 m × 15.2 m) array receives a 50 ft (15.2 m) listed spacing if it responds to the test fire before the test sprinkler head operates.

It is important to keep in mind that the *listed spacing* for a heat detector is a "lumped" parameter, meaning that a number of unrelated variables are lumped together into a single parameter. These variables include fire size, fire growth rate, ambient temperature, ceiling height, and RTI.

System Design Tip

The listed spacing is sufficiently accurate to compare two heat detectors, but it cannot be used to predict when a given detector will respond, except in the context of the fire test in the test room under test conditions. Outside the context of the listing test, the listed spacing is only a relative indication of the detector thermal response. When using the prescriptive design requirements, the designer uses a spacing based on the detector listed spacing.

If a quantitative prediction of detector performance is needed either for analysis or for the basis of a design, the alternative design method in Annex B should be used. (See Section 17.3.) In this case, fairly precise predictions of heat detector response time can be developed using the RTI of the heat detector, its operating temperature, and the prediction calculations in Section B.3.

EXHIBIT 17.25

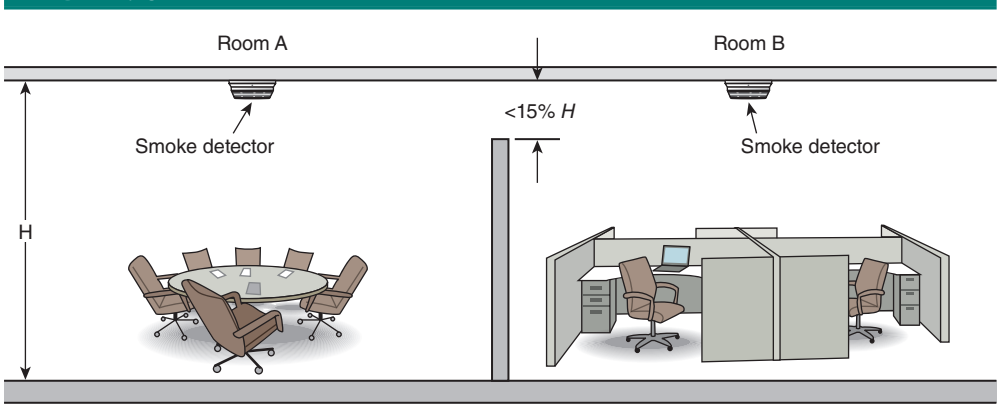

Partitions Extending Higher Than 85 Percent of Floor-to-Ceiling Height, Requiring Addition of Smoke Detectors for Each Portioned-Off Area.

A.17.6.3.1.1 Maximum linear spacings on smooth ceilings for spot-type heat detectors are determined by full-scale fire tests. *[See Figure A.17.6.3.1.1(c).]* These tests assume that the detectors are to be installed in a pattern of one or more squares, each side of which equals the maximum spacing as determined in the test, as illustrated in Figure A.17.6.3.1.1(a). The detector to be tested is placed at a corner of the square so that it is positioned at the farthest possible distance from the fire while remaining within the square. Thus, the distance from the detector to the fire is always the test spacing multiplied by 0.7 and can be calculated as shown in Table A.17.6.3.1.1. Figure A.17.6.3.1.1(b) illustrates the smooth ceiling spacing layout for line-type heat detectors.

TABLE A.17.6.3.1.1 *Test Spacing for Spot-Type Heat Detectors*

Test Spacing		***Maximum Test Distance from Fire to Detector (0.7D)***	
ft	***m***	***ft***	***m***
50 × 50	15.2 × 15.2	35.0	10.7
40 × 40	12.2 × 12.2	28.0	8.5
30 × 30	9.1 × 9.1	21.0	6.4
25 × 25	7.6 × 7.6	17.5	5.3
20 × 20	6.1 × 6.1	14.0	4.3
15 × 15	4.6 × 4.6	10.5	3.2

Once the correct maximum test distance has been determined, it is valid to interchange the positions of the fire and the detector. The detector is now in the middle of the square, and the listing specifies that the detector is adequate to detect a fire that occurs anywhere within that square — even out to the farthest corner.

In laying out detector installations, designers work in terms of rectangles, as building areas are generally rectangular in shape. The pattern of heat spread from a fire source, however, is not rectangular in shape. On a smooth ceiling, heat spreads out in all directions in an ever-expanding circle. Thus, the coverage of a detector is not, in fact, a square, but rather a circle whose radius is the linear spacing multiplied by 0.7.

This is graphically illustrated in Figure A.17.6.3.1.1(d). With the detector at the center, by rotating the square, an infinite number of squares can be laid out, the corners of which create the plot of a circle whose radius is 0.7 times the listed spacing. The detector will cover any of these squares and, consequently, any point within the confines of the circle.

So far this explanation has considered squares and circles. In practical applications, very few areas turn out to be exactly square, and circular areas are extremely rare. Designers deal generally with rectangles of odd dimensions and corners of rooms or areas formed by wall intercepts, where spacing to one wall is less than one-half the listed spacing. To simplify the rest of this explanation, the use of a detector with a listed spacing of 30 ft × 30 ft (9.1 m × 9.1 m) should be considered. The principles derived are equally applicable to other types.

Figure A.17.6.3.1.1(g) illustrates the derivation of this concept. In Figure A.17.6.3.1.1(g), a detector is placed in the center of a circle with a radius of 21 ft (0.7 × 30 ft) [6.4 m (0.7 × 9.1 m)]. A series of rectangles with one dimension less than the permitted maximum of 30 ft (9.1 m) is constructed within the circle. The following conclusions can be drawn:

(1) As the smaller dimension decreases, the longer dimension can be increased beyond the linear maximum spacing of the detector with no loss in detection efficiency.
(2) A single detector covers any area that fits within the circle. For a rectangle, a single, properly located detector may be permitted, provided the diagonal of the rectangle does not exceed the diameter of the circle.

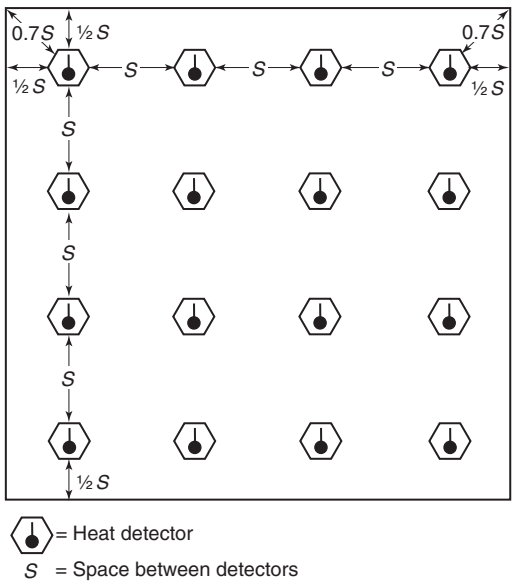

FIGURE A.17.6.3.1.1(a) *Spot-Type Heat Detectors.*

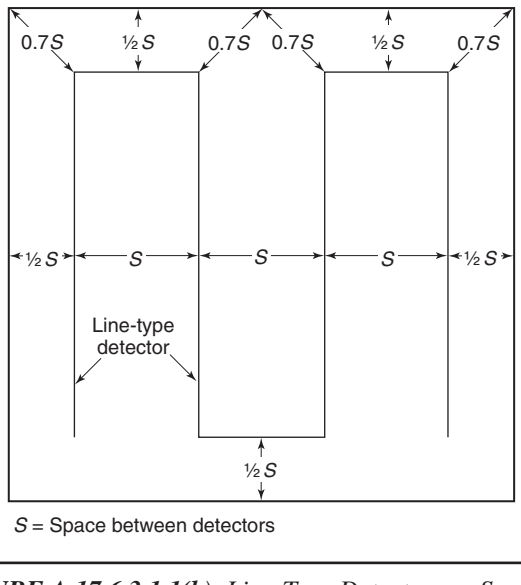

FIGURE A.17.6.3.1.1(b) *Line-Type Detectors — Spacing Layouts, Smooth Ceiling.*

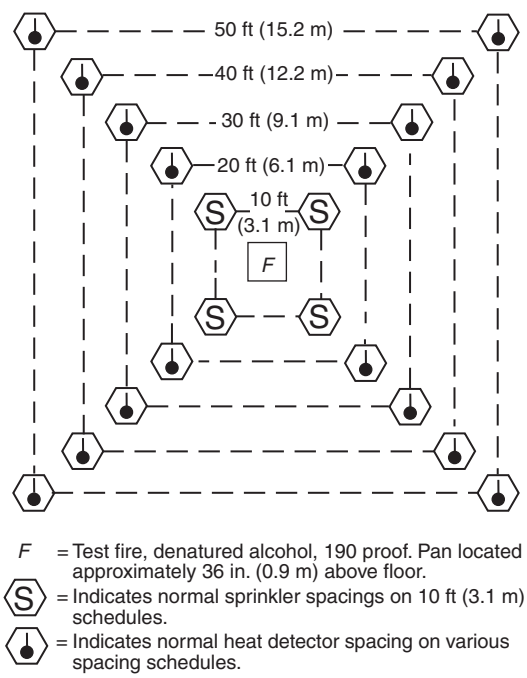

FIGURE A.17.6.3.1.1(c) *Fire Test Layout.*

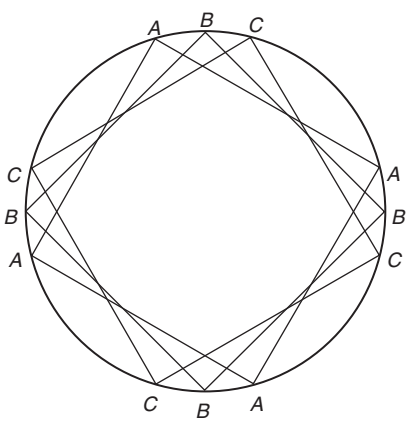

FIGURE A.17.6.3.1.1(d) *Detector Covering any Square Laid Out in Confines of Circle in Which Radius Is 0.7 Times Listed Spacing.*

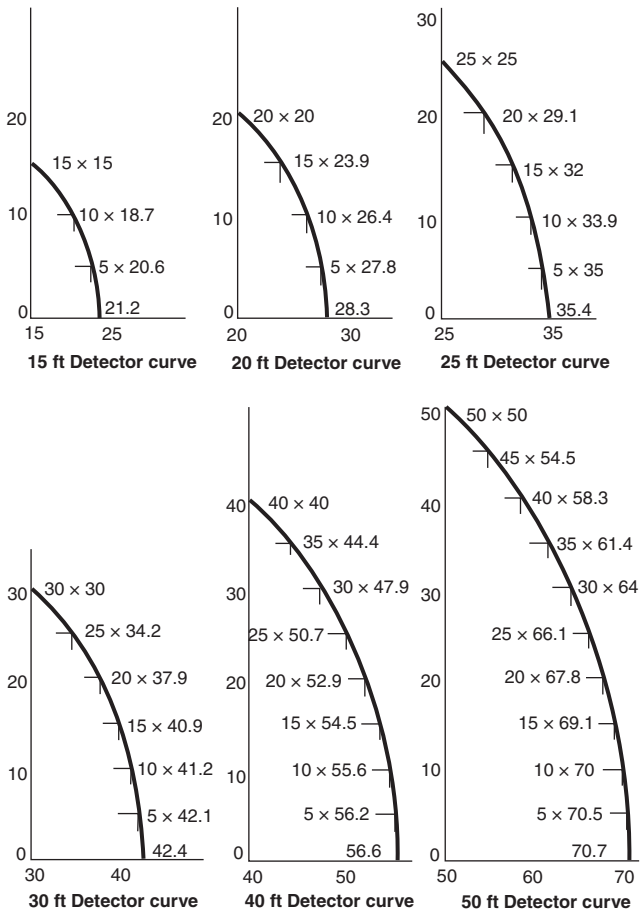

Note: All measures are in feet.

FIGURE A.17.6.3.1.1(e) *Typical Rectangles for Detector Curves of 15 ft to 50 ft.*

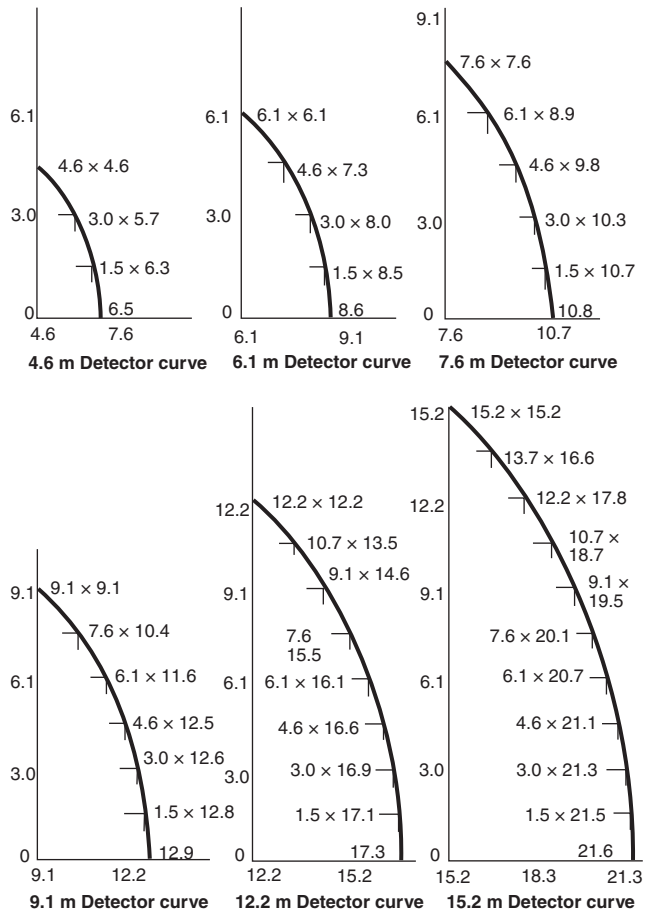

Note: All measures are in meters.

FIGURE A.17.6.3.1.1(f) *Typical Rectangles for Detector Curves of 4.6 m to 15.2 m.*

(3) Relative detector efficiency actually is increased, because the area coverage in square meters is always less than the 900 ft^2 (84 m^2) permitted if the full 30 ft × 30 ft (9.1 m × 9.1 m) square were to be utilized. The principle illustrated here allows equal linear spacing between the detector and the fire, with no recognition for the effect of reflection from walls or partitions, which in narrow rooms or corridors is of additional benefit. For detectors that are not centered, the longer dimension should always be used in laying out the radius of coverage.

Areas so large that they exceed the rectangular dimensions given in Figure A.17.6.3.1.1(g) require additional detectors. Often proper placement of detectors can be facilitated by breaking down the area into multiple rectangles of the dimensions that fit most appropriately *[see Figure A.17.6.3.1.1(e) and Figure A.17.6.3.1.1(f)]*. For example, refer to Figure A.17.6.3.1.1(h). A corridor 10 ft (3.0 m) wide and up to 82 ft (25.0 m) long can be covered with two 30 ft (9.1 m) spot-type detectors. An area 40 ft (12.2 m) wide and up to 74 ft (22.6 m) long can be covered with four spot-type detectors. Irregular areas need more careful planning to make certain that no spot on the ceiling is more than 21 ft (6.4 m) away from a detector. These points can be determined by striking arcs from the remote corner. Where any part of the area lies beyond the circle with a radius of 0.7 times the listed spacings, additional detectors are required.

Figure A.17.6.3.1.1(h) illustrates smoke or heat detector spacing layouts in irregular areas.

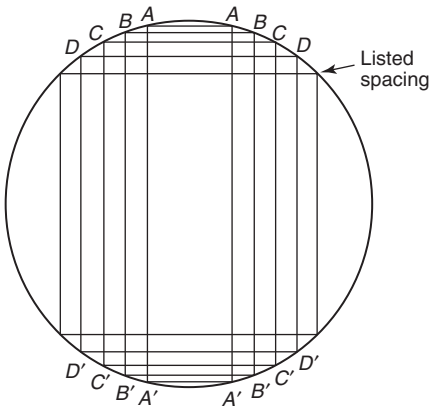

Rectangles

A = 10 ft × 41 ft = 410 ft^2 (3.1 m × 12.5 m = 38 m^2)
B = 15 ft × 39 ft = 585 ft^2 (4.6 m × 11.9 m = 54 m^2)
C = 20 ft × 37 ft = 740 ft^2 (6.1 m × 11.3 m = 69 m^2)
D = 25 ft × 34 ft = 850 ft^2 (7.6 m × 10.4 m = 79 m^2)
Listed spacing for heat detectors only = 30 ft × 30 ft = 900 ft^2 (9.1 m × 9.1 m = 84 m^2)

Note: Smoke detectors are not listed for spacing. Use manufacturer's coverage recommendations and this figure.

FIGURE A.17.6.3.1.1(g) *Detector Spacing, Rectangular Areas.*

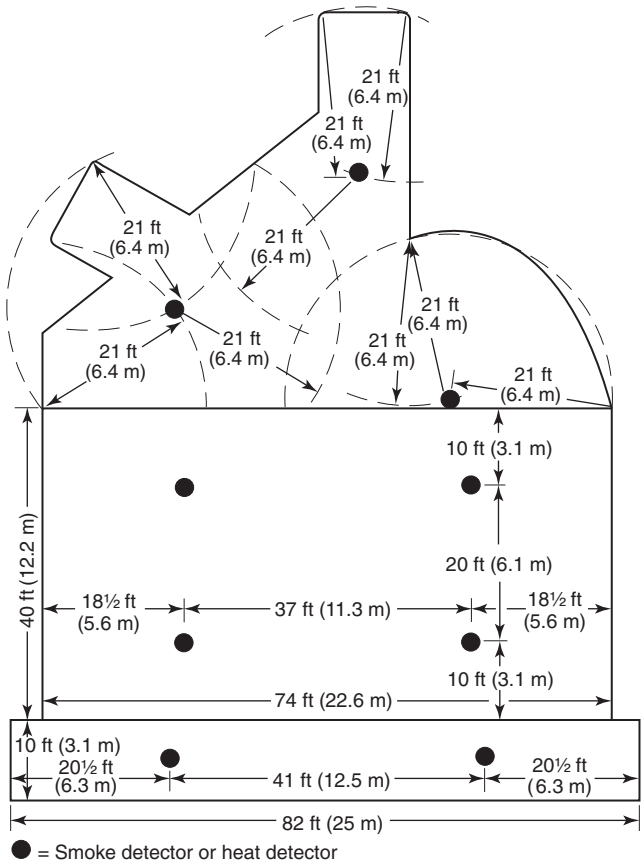

FIGURE A.17.6.3.1.1(h) *Smoke or Heat Detector Spacing Layout in Irregular Areas.*

System Design Tip

FAQ Why is reduced spacing required?

The spacing criteria determines how many detectors of a given type are necessary to provide heat detection for a compartment of a given area. The designer must reduce the spacing used for design from the listed spacing to compensate for the impact that variations in the specific compartment can have on the temperature and velocity of the ceiling jet. These spacing reductions, addressed in 17.6.3.2 through 17.6.3.5, compensate for environmental impacts on the detector performance and provide response roughly equivalent to that attainable from the same detectors installed on smooth, level ceilings 10 ft (3 m) in height using the listed spacing.

17.6.3.1.2 Irregular Areas. For irregularly shaped areas, the spacing between detectors shall be permitted to be greater than the listed spacing, provided that the maximum spacing from a detector to the farthest point of a sidewall or corner within its zone of protection is not greater than 0.7 times the listed spacing.

In Figure A.17.6.3.1.1(h), an arc having a radius of 0.7*S* has been drawn about each detector in the irregular areas to verify that no point in the room is more than a distance of 0.7*S* from the nearest detector. This method often results in detectors being placed in an asymmetrical pattern.

17.6.3.1.3 Location.

17.6.3.1.3.1* Unless otherwise modified by 17.6.3.2.2, 17.6.3.3.2, or 17.6.3.7, spot-type heat-sensing fire detectors shall be located on the ceiling not less than 4 in. (100 mm) from the sidewall or on the sidewalls between 4 in. and 12 in. (100 mm and 300 mm) from the ceiling.

A.17.6.3.1.3.1 Figure A.17.6.3.1.3.1 illustrates the proper mounting placement for detectors.

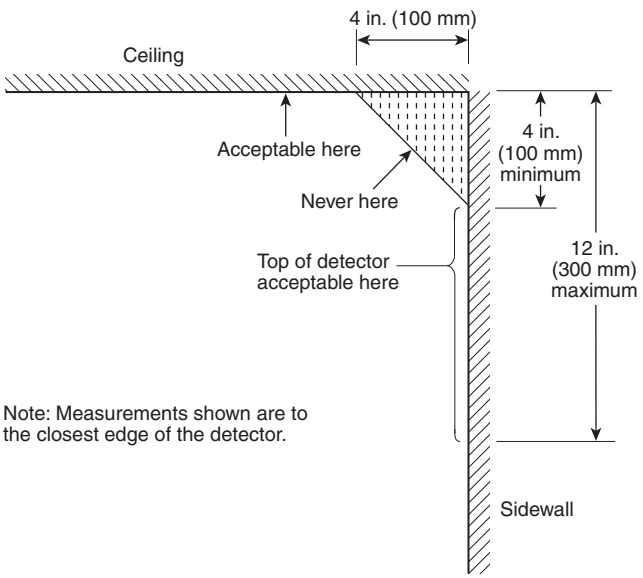

FIGURE A.17.6.3.1.3.1 *Example of Proper Mounting for Heat Detectors.*

These mounting distances apply only to spot-type heat detectors. The term *ceiling* is defined in 3.3.38 as "the upper surface of a space, regardless of height."

FAQ What is the best location for the installation of heat detectors?

The ceiling location derives the maximum benefit from the upward flow of the fire plume and the horizontal flow of the ceiling jet beneath the ceiling plane. As the ceiling jet approaches the wall, its velocity decreases. Lower ceiling jet velocities result in slower heat transfer to the detector and, therefore, a delayed response. Generally, it is best to keep detectors farther from the wall than the 4 in. (100 mm) minimum distance. In practice, this requirement is also appropriately applied where heat detectors are installed near to downward projecting obstructions such as beams.

The original research data used to support the existence of a "dead air space" where the walls meet the ceiling in a typical room was based on work performed in 1993 [Fire Protection Research Foundation, 1993]. Figure A.17.6.3.1.3.1 shows this potential dead air space extending 4 in. (100 mm) in from the wall and 4 in. (100 mm) down from the ceiling. More recent work related to smoke detection but not heat detection indicates that this dead air may not exist to the degree originally thought [NFPA Fire Protection Research Foundation Report, April 2006]. Since the research has yet to be extended to heat detectors, heat detectors are still excluded from being installed in those areas.

17.6.3.1.3.2 Unless otherwise modified by 17.6.3.2.2, 17.6.3.3.2, or 17.6.3.7, line-type heat detectors shall be located on the ceiling or on the sidewalls not more than 20 in. (510 mm) from the ceiling.

Line-type heat detectors are generally considered equivalent to a row of spot-type detectors for the purposes of spacing and location. However, manufacturers of line-type detectors have had their products listed with different mounting techniques. The location of line-type detectors must always be in conformance with the manufacturer's installation instructions. Attaching a line-type detector directly to and in contact with a structural building component that can absorb heat will act as a "heat sink" and retard detector operation.

17.6.3.2* Solid Joist Construction.

The definition of the term *joist* must be inferred from the definition of the term *solid joist construction* in 3.3.40.4. Joists are solid projections, whether structural or not, extending downward from the ceiling more than 4 in. (100 mm) in depth and spaced on centers of 36 in. (910 mm) or less. The 2 in. × 10 in. (50 mm × 254 mm) rafters installed on 16 in. (406 mm) centers supporting a roof deck are typical of solid joist construction.

The structural component commonly called a bar joist is actually an open web beam. If the upper web member of an open web beam is less than 4 in. (100 mm) deep, the beam is ignored. If it is more than 4 in. (100 mm) deep, it is called either a joist or a beam, depending on the center-to-center spacing.

A.17.6.3.2 In addition to the special requirements for heat detectors that are installed on ceilings with exposed joists, reduced spacing also could be required due to other structural characteristics of the protected area, such as possible drafts or other conditions that could affect detector operation.

See Figure A.17.6.3.2 for an example of reduced spacing for solid joist construction.

Figure A.17.6.3.2 illustrates the result of the 50 percent spacing reduction for solid joists per 17.6.3.2.1. The example maximizes the efficiency of the heat detector distribution by also providing a dimension of ¼*S* from the walls at each end of the space. However, it should be noted that the ¼*S* dimension illustrated in Figure A.17.6.3.2 is not a requirement and that this dimension could be greater than ¼*S*, provided the basic spacing requirements of 17.6.3.1.1 are not violated. Due to the effects of heat reflection

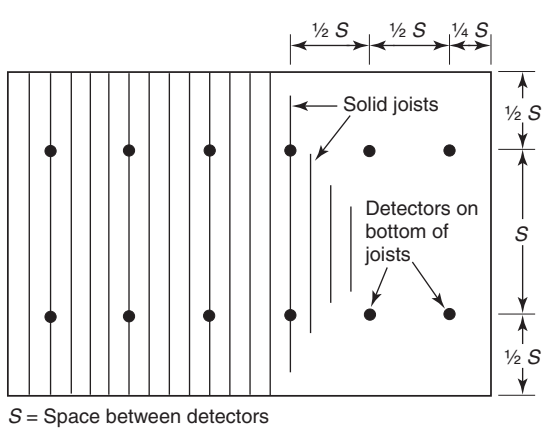

FIGURE A.17.6.3.2 *Detector Spacing Layout, Solid Joist Construction.*

from the wall or corner boundaries, effective detection is expected with heat detectors spaced more than ¼*S* from the walls.

17.6.3.2.1 Spacing. The design spacing of heat detectors, where measured at right angles to the solid joists, shall not exceed 50 percent of the listed spacing.

Hot combustion product gases and smoke from a fire rise vertically in a plume until the plume impinges on the ceiling. There, the hot combustion product gases and entrained air of the fire plume change direction and move horizontally across the ceiling, becoming a ceiling jet.

Where the joists are running parallel to the direction of travel of the ceiling jet, they have little effect on the speed with which the hot gases of the ceiling jet move across the ceiling. However, where the joists are perpendicular to the direction of gas flow from the fire to the detector, they produce turbulence and reduce the ceiling jet velocity, as depicted in Exhibit 17.26. Consequently, a closer spacing for heat detectors in the direction perpendicular to the joists is necessary to attain uniform performance.

17.6.3.2.2 Location. Detectors shall be mounted at the bottom of the joists.

The thickness of the ceiling jet is usually taken to be approximately one-tenth the floor-to-ceiling height. In a normal room with an 8 ft (2.4 m) ceiling, this height leads to a presumed ceiling jet thickness of 9.6 in. (244 mm). Locating a heat detector on the bottom of a 4 in. (100 mm) joist would place the detector in the center of the ceiling jet.

17.6.3.3* Beam Construction.

A definition of the term *beam* must be inferred from the definition of *beam construction* in 3.3.40.1. Beams are effectively defined as solid projections, whether structural or not, extending downward from the ceiling more than 4 in. (100 mm) in depth and spaced on centers of more than 36 in. (910 mm). The principal distinction between a joist and a beam is the center-to-center spacing. Unlike joists, the location of detectors in an area with beams varies depending on the depth and center-to-center spacing of the beams.

Due to their increased depth, beams create barriers to the horizontal flow of the ceiling jet because they project more than 4 in. (100 mm) from the ceiling and are on center-to-center spacing greater than 36 in. (910 mm). The bay created by the beams and the walls at either end or by the purlins (cross beams) fills up with smoke and hot combustion product gases before spilling into the next bay. This fill-and-spill progression of the ceiling jet is slower than the velocity attained on a smooth, flat ceiling.

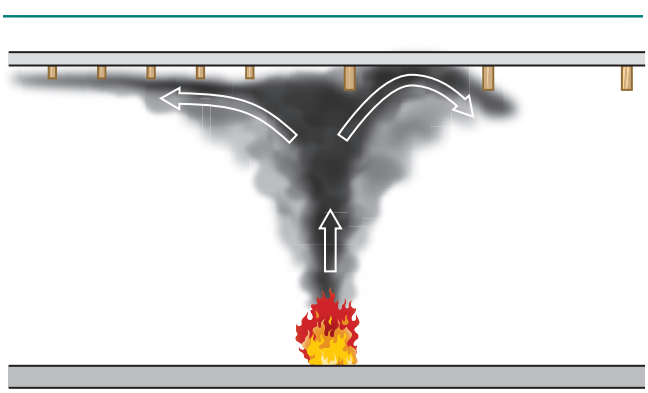

Joists: 3 ft (0.9 m) or less on center, more than 4 in. (100 mm) deep
Beams: More than 3 ft (0.9 m) on center, more than 4 in. (100 mm) deep

EXHIBIT 17.26

Effect of Joists and Beams on Ceiling Jet.

As the rate of heat transfer from the ceiling jet gases to the detector is proportional to the velocity of the ceiling jet flow, slower flow results in slower detector response. For the design to attain consistent performance, the detector spacing in the direction perpendicular to the beams must be reduced to compensate for the reduced ceiling jet velocity and the reduced speed of response.

Open web beams and trusses have little effect on the passage of air currents that are caused by fire. Generally, open web beams and trusses are not considered in determining the proper spacing of detectors unless the solid part of the top cord extends more than 4 in. (100 mm) down from the ceiling.

A.17.6.3.3 The location and spacing of heat detectors should consider beam depth, ceiling height, beam spacing, and fire size.

If the ratio of beam depth (*D*) to ceiling height (*H*), (*D/H*), is greater than 0.10 and the ratio of beam spacing (*W*) to ceiling height (*H*), (*W/H*), is greater than 0.40, heat detectors should be located in each beam pocket.

If either the ratio of beam depth to ceiling height (*D/H*) is less than 0.10 or the ratio of beam spacing to ceiling height (*W/H*) is less than 0.40, heat detectors should be installed on the bottom of the beams.

The criteria included in A.17.6.3.3 make some tacit assumptions regarding the thickness of the ceiling jet under varied conditions. Research has shown that, to a first-order approximation, the ceiling jet can be thought of as occupying the upper 10 percent of the compartment volume [Alpert, 1972; Heskestad and Delichatsios, 1989]. If the downward extension of the beams is less than 10 percent of the ceiling height, the impact of the beams on the flow of the hot combustion product gases in the ceiling jet will be lessened because a significant portion of the ceiling jet will pass beneath the beams.

Research also shows that as the plume rises from the fire, it expands [Heskestad, 1975; Morton, Taylor, and Turner, 1956; Schifiliti, 1986]. Generally, a first-order approximation of the plume diameter at the ceiling is 40 percent of the ceiling height (0.4*H*). Therefore, when relatively narrow center-to-center beam spacing is encountered with a beam spacing-to-ceiling height ratio of less than 0.4, the plume will be wider than the bay formed by the beams and purlins in at least one direction when it impinges on the ceiling.

FAQ What effects do beam spacing and depth have on detection?

As more than one bay will be filling from the plume and the bays will fill rapidly, the fill part of the fill-and-spill propagation of the ceiling jet causes only a relatively short delay in time. Where the beam depths are relatively large or the bay volumes that are proportional to beam center-to-center spacing are large, the fill delay is significant and detectors must be located in each bay.

Exhibit 17.27 shows the measurements that affect the location of heat detectors where beamed ceilings are encountered. Generally, joists will be more closely spaced than beams, as shown in Exhibits 17.27(a) and (b). The depth and spacing of beams are key parameters to determining how heat detectors should be spaced in accordance with 17.6.3.3.1. When beams and girders are involved, as shown in Exhibit 17.27(c), the location of the girder top edge must be considered. In cases where the girder top edge is more than 4 in. (100 mm) below the ceiling, the girder is not considered a factor in the detector's placement. The converse is true when the girder top edge is within 4 in. (100 mm) of the ceiling.

17.6.3.3.1 Spacing.

17.6.3.3.1.1 A ceiling shall be treated as a smooth ceiling if the beams project no more than 4 in. (100 mm) below the ceiling.

Beams with a depth of 4 in. (100 mm) or less have insufficient effect on the overall flow of the ceiling jet to affect system response.

EXHIBIT 17.27

Beam Measurements for Predicting Effects on Detection.

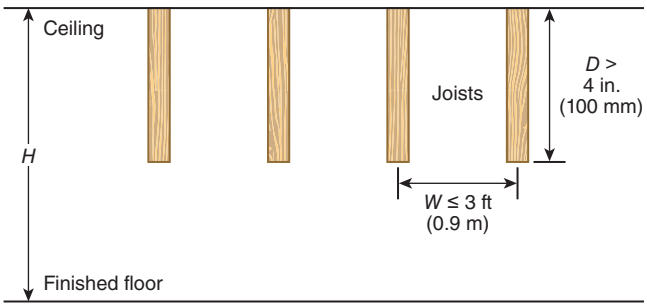

(a) Defining characteristics for joists

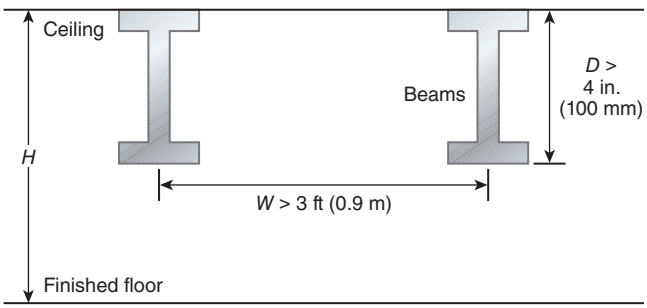

(b) Defining characteristics for beams

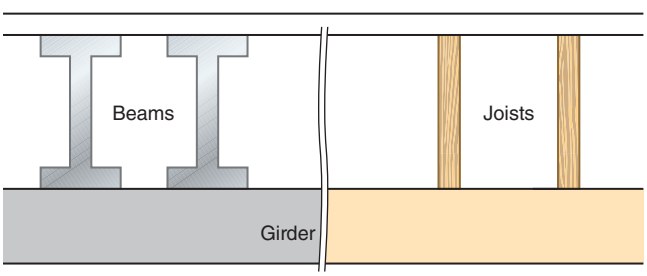

Note: A girder is a support for beams or joists that runs at right angles to the beams or joists. If the top of the girder is >4 in. (100 mm) from the ceiling, it is not a factor in detector location. If the top of the girder is <4 in. (100 mm) from the ceiling, the girder is to be considered a beam.

(c) Defining characteristics for girders

17.6.3.3.1.2 Where the beams project more than 4 in. (100 mm) below the ceiling, the spacing of spot-type heat detectors at right angles to the direction of beam travel shall be not more than two-thirds of the listed spacing.

17.6.3.3.1.3 Where the beams project more than 18 in. (460 mm) below the ceiling and are more than 8 ft (2.4 m) on center, each bay formed by the beams shall be treated as a separate area.

Where bays more than 8 ft (2.4 m) on center are formed by beams more than 18 in. (460 mm) deep, each bay is to be treated as a separate area for the placement of heat detectors. Exhibit 17.28 depicts a fire plume rising up to a beamed ceiling having dimensions that sufficiently capture the plume and ceiling jet, which delay the spill of heat gases into the next bay.

EXHIBIT 17.28

Delaying Effect of Beams on the Ceiling Jet.

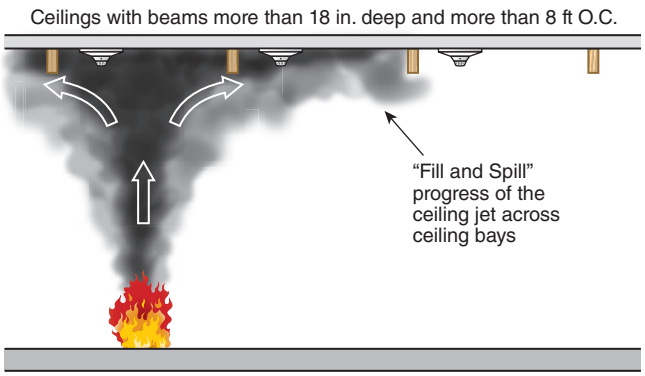

17.6.3.3.2 Location. Where beams are less than 12 in. (300 mm) in depth and less than 8 ft (2.4 m) on center, detectors shall be permitted to be installed on the bottom of beams.

The installation of heat detectors on the bottom of beams is permitted only where the beams are less than 12 in. (300 mm) deep and only where the beams are on centers of less than 8 ft (2.4 m). If the beams are more than 12 in. (300 mm) deep, they will likely project downward far enough to sufficiently interrupt and divert the ceiling jet. Additionally, if the beams are spaced more than 8 ft (2.4 m) apart, the volume enclosed by the bay formed by the beams will be of a sufficient size that a large quantity of ceiling jet gases must accumulate in that bay before they will spill into the adjacent bay. Since these two factors will retard detector response, the detectors must be placed on the ceiling surface between the beams.

System Design Tip

The designer needs to be aware that the only permitted location for spot-type heat detectors is at or near the ceiling plane. Detectors are not permitted to be mounted on the bottoms of open web beams. Research is not available to provide guidance for detector placement in areas without ceilings. If the space does not have a sufficiently solid ceiling on which to locate heat detectors, heat detection cannot be installed in compliance with the prescriptive requirements. For example, a slatted ceiling open to the atmosphere or other large area would not be an appropriate ceiling surface to accommodate heat detectors. Such would also be the case for the installation of detectors on the underside of open grate flooring in an industrial setting.

17.6.3.4* Sloping Ceilings (Peaked and Shed).

When the fire plume impinges on a sloped ceiling, the development of the ceiling jet is affected, as the buoyancy of the hot gases continues to accelerate the plume up the sloped ceiling.

Furthermore, less energy is needed to turn the flow of combustion product gases and entrained air up a sloped ceiling than to turn it 90 degrees for a flat ceiling. These two effects result in the ceiling jet moving much more rapidly up a sloped ceiling and much more slowly down the slope than it would across a level ceiling. When the ceiling jet reaches the peak of the roof, its flow stops.

System Design Tip

In the design of detection for sloped ceilings, two spacings must be applied. The first is the spacing perpendicular to the slope of the ceiling. All the detectors on this row are the same height from the floor, and the spacing is determined by the ceiling height criteria in 17.6.3.4.1.1 or 17.6.3.4.1.2, depending on the slope of the ceiling. For shallow slopes (<30°), the designer assumes the ceiling height is established by the peak of the roof. For steeper slopes (>30°), the designer must use, at a minimum, the average height to calculate the spacing.

The second spacing is in the up-slope direction. To compensate for the slope, the horizontal projection of the ceiling onto the floor is used. The distance between the detectors will be greater as the slope gets steeper, but the buoyancy effects will also be greater, accelerating the ceiling jet up the slope.

A.17.6.3.4 Figure A.17.6.3.4(a) illustrates smoke or heat detector spacing for peaked-type sloped ceilings.

Figure A.17.6.3.4(b) illustrates smoke or heat detector spacing for shed-type sloped ceilings.

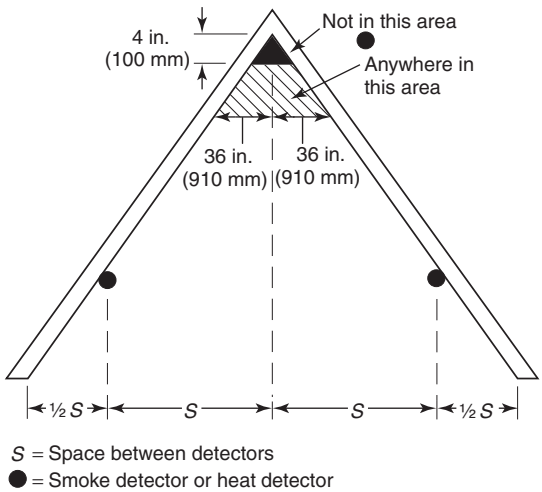

FIGURE A.17.6.3.4(a) *Smoke or Heat Detector Spacing Layout, Sloped Ceilings (Peaked Type).*

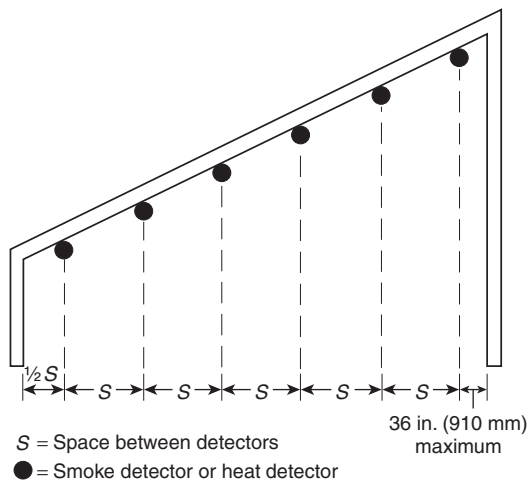

FIGURE A.17.6.3.4(b) *Smoke or Heat Detector Spacing Layout, Sloped Ceilings (Shed Type)*

17.6.3.4.1 Spacing.

17.6.3.4.1.1 Ceiling Slope Less Than 30 Degrees. For a ceiling slope of less than 30 degrees, all detectors shall be spaced using the height at the peak.

The term *sloping ceiling* is defined in 3.3.38.2 as a ceiling that has a slope of more than 1 in 8, which means 1 in. (25.4 mm) rise (vertical) over 8 in. (200 mm) of run (horizontal). This slope corresponds to a rise-over-run ratio of 0.125, or an angle of about 7.2°. Any slope less than or equal to 1 in 8 is considered equivalent to a level ceiling.

Since the buoyancy of the ceiling jet gases accelerates the ceiling jet beneath a sloped ceiling, the spacing of detectors along the slope can be increased. A spacing based on the horizontal projection down from the ceiling provides a response roughly equivalent to that of a horizontal ceiling.

17.6.3.4.1.2 Ceiling Slopes of 30 Degrees or Greater. All detectors, other than those located in the peak, shall be spaced using the average slope height or the height of the peak.

Where the slope of the ceiling is 30° or more, the acceleration of the ceiling jet due to buoyancy becomes more of a factor. Since less cooling of the ceiling jet occurs as it flows up the ceiling slope, less compensation is necessary and, therefore, the average ceiling height is used for the determination of detector spacing.

17.6.3.4.1.3 Spacing shall be measured along a horizontal projection of the ceiling in accordance with the type of ceiling construction.

The acceleration of the ceiling jet up the sloped ceiling is accounted for by using the horizontal projection of the ceiling onto the floor. The horizontal projection is the cosine of the slope angle. For a ceiling

slope of 30 degrees and a design spacing of 30 ft (9.1 m) (projected onto the floor), divide 30 ft (9.1 m) by cos 30° to obtain the actual distance along the ceiling between detectors:

$$\frac{30\text{ ft }(9.1\text{m})}{0.866} = 34.6\text{ ft }(10.5\text{ m})$$

Thus, adjacent detectors will be 34.6 ft (10.5 m) apart when measured along the ceiling surface. Although 17.6.3.4.1.3 requires measurement along a horizontal projection, this commentary helps clarify the dimensions along the slope.

17.6.3.4.2 Location.

17.6.3.4.2.1 A row of detectors shall first be located at or within 36 in. (910 mm) of the peak of the ceiling.

The buoyancy of the fire plume and ceiling jet affects the location of heat detectors as well as the spacing. The spacing is affected in the up/down slope direction and is adjusted for buoyancy by using the horizontal projection measurements between detectors. At the peak, the ceiling jet collides with a mass of the hottest air that normally exists beneath the ceiling. The ceiling jet usually displaces this air because the ceiling jet is usually hotter than the air at the peak of the roof. Because the volume of the roof peak area is relatively small, it rapidly fills with the hottest gas from the plume.

Usually the speed of response for a heat detector is a factor of both the temperature of the ceiling jet gases and the velocity of the ceiling jet flow. The hotter the gas and the faster the flow, the more rapid the detector response. At the peak of the roof, even though the ceiling jet velocity decreases, the temperature remains high as the flow of gases continues up to the peak creating the initial hot gas zone. For this reason, a row of spot-type detectors is required in the peak of the roof that serves as an effective heat collection zone.

17.6.3.4.2.2 Additional detectors shall be located as determined in 17.6.3.4.1.

The process of design starts with a row of detectors, spaced in accordance with 17.6.3.1, 17.6.3.2, or 17.6.3.3, as appropriate at the peak, within 36 in. (910 mm) of the ridge beam. Then additional rows of detectors are located downslope from the peak, with spacing measured across the floor in a horizontal projection from the roof, until a row of detectors is installed within one-half the design spacing of the ceiling-wall intersection.

17.6.3.5 High Ceilings.

FAQ

What is the reason that detector spacing must be reduced for ceilings higher than 10 ft (3 m)?

The speed of response of a heat detector depends on both the temperature of the ceiling jet gas and the speed of the ceiling jet flow. The higher the gas temperature and flow velocity are, the more rapid the heat detector response. As the fire plume rises, it cools due to fresh air entrainment and volumetric expansion. As the plume cools, its buoyancy is reduced and its upward velocity decreases. These cooling and velocity loss phenomena continue after the plume turns and forms a ceiling jet. The ceiling jet entrains cool air as it moves across the ceiling. As the ceiling jet moves further from the plume centerline, its velocity decreases, as does its temperature.

In compartments with higher than normal ceilings, the plume gases undergo increased cooling due to the increased cool air entrainment and expansion as the plume travels the increased distance to the ceiling. In the case of a room with a high ceiling, the plume is cooler and slower, yielding a ceiling jet that is both cooler and moving at a slower initial velocity. Consequently, if all other variables are held constant, heat detectors installed on high ceilings experience lower temperatures at lower velocities than when they are installed on lower ceilings.

One way to compensate for the cooler and slower flow of the ceiling jet at high ceiling elevations is to move the detectors closer together and, accordingly, closer to the fire plume centerline, where velocity and temperature will be higher. To attain a roughly equivalent response to one obtained at normal ceiling heights [10 ft (3.0 m)], the detector spacing must be reduced for high ceilings. Essentially, Table 17.6.3.5.1 is a basis of adjustment to ensure roughly equivalent heat detector response times for ceiling heights from 10 ft to 30 ft (3.0 m to 9.1 m).

Note that the prescriptive requirements for spacing heat detectors, including the spacing reduction for increased ceiling heights, need not be used for a performance-based design acceptable to the authority having jurisdiction.

17.6.3.5.1* Unless otherwise modified by 17.6.3.5.2, on ceilings 10 ft to 30 ft (3.0 m to 9.1 m) high, heat detector spacing shall be reduced in accordance with Table 17.6.3.5.1 prior to any additional reductions for beams, joists, or slope, where applicable.

Δ ***TABLE 17.6.3.5.1*** *Heat Detector Spacing Reduction Based on Ceiling Height*

Ceiling Height Greater than (>)		*Up to and Including*		*Multiply Listed Spacing by*
ft	*m*	*ft*	*m*	
0	0	10	3.0	1.00
10	3.0	12	3.7	0.91
12	3.7	14	4.3	0.84
14	4.3	16	4.9	0.77
16	4.9	18	5.5	0.71
18	5.5	20	6.1	0.64
20	6.1	22	6.7	0.58
22	6.7	24	7.3	0.52
24	7.3	26	7.9	0.46
26	7.9	28	8.5	0.40
28	8.5	30	9.1	0.34

Δ **A.17.6.3.5.1** Both 17.6.3.5.1 and Table 17.6.3.5.1 are constructed to provide detector performance on higher ceilings [to 30 ft (9.1 m) high] that is essentially equivalent to that which would exist with detectors on a 10 ft (3.0 m) ceiling. Table 17.6.3.5.1 is only applicable to spot-type heat detectors.

The Fire Detection Institute Fire Test Report *[see I.1.2.18(10)]* is used as a basis for Table 17.6.3.5.1. The report does not include data on integration-type detectors. Pending development of such data, the manufacturer's published instructions will provide guidance.

Table 17.6.3.5.1 provides for spacing modification to take into account different ceiling heights for generalized fire conditions. Information regarding a design method that allows the designer to take into account ceiling height, fire size, and ambient temperatures is provided in Annex B.

The listed spacing factor for a given heat detector is a rough measure of how far the ceiling jet can travel from the test fire (used in the listing evaluation) before the jet has cooled and slowed down too much to provide detection in the required time period (<2 minutes ± 10 seconds).

Increased ceiling height has a significant effect on the ceiling jet temperature and velocity. The reduction of detector spacing with increased ceiling height places detectors closer to the fire plume centerline, thus allowing the hot combustion product gas, air, and radiated heat to travel a shorter distance before encountering a detector.

System Design Tip

The inverse square law of radiation heat transfer predicts that when the distance between the fire and the detector is doubled, the amount of radiated heat that reaches the detector will be reduced by a factor of 4. Thus the extent to which radiant heat transfer plays a role in activating a heat detector is reduced as the ceiling height is increased.

Table 17.6.3.5.1 covers ceiling heights up to 30 ft (9.1 m), which is the highest measurement with available test data. (See references in Annex B.) A theoretical basis has yet to be developed to extrapolate for higher ceiling heights. Where ceilings are higher than 30 ft (9.1 m), the designer must act with the knowledge that those conditions are beyond the limits of the testing that provided the basis for the requirements.

The computational method in Annex B can be used in conjunction with performance-based design methods in accordance with 17.6.1.3 to account for ceiling height. The predicted response obtained from Annex B calculations is preferable to the predictions obtained from the table because the calculations are based on the actual RTI of the detector, rather than an average.

The Code does not prohibit the use of heat detectors on ceilings higher than 30 ft (9.1 m). Computer models such as FPETOOL and Fire Dynamics Simulator (FDS) have been used to predict detector performance at higher ceiling heights. Some studies have confirmed the predictions derived from these models. However, in the context of growing fires, a much larger fire will be necessary to actuate the detectors on higher ceilings. The fire allowed by the delayed detection might be considerably larger than that normally assumed. This delay could mean that the detection system will not meet the protection goals of the owner nor the intent of the Code. The final decision whether a design is acceptable rests with the authority having jurisdiction.

N **17.6.3.5.2** For line-type electrical conductivity detectors *(see 3.3.70.11)* and pneumatic rate-of-rise tubing heat detectors (*see 3.3.70.15)*, which rely on the integration effect, the derating required by Table 17.6.3.5.1 shall not apply, and the manufacturer's published instructions shall be followed for appropriate alarm point and spacing.

17.6.3.5.3* Spacing Minimum. The minimum spacing of heat detectors shall not be required to be less than 0.4 times the height of the ceiling.

A.17.6.3.5.3 The width of uniform temperature of the plume when it impinges on the ceiling is approximately 0.4 times the height above the fire, so reducing spacing below this level will not increase response time. For example, a detector with a listed spacing of 15 ft (4.6 m) or 225 ft^2 (21 m^2) need not be spaced closer than 12 ft (3.7 m) on a 30 ft (9.1 m) ceiling, even though Table 17.6.3.5.1 states that the spacing should be 0.34 × 15 ft (0.34 × 4.6 m), which equals 5.1 ft (1.6 m).

System Design Tip

The Code requires the reduction of the heat detector listed spacing, such as the requirements for high ceilings [>10 ft (3.0 m)] and those requirements for joist and beam construction. The required reductions, however, are limited to a practical minimum dimension of 0.4 times the height of the ceiling.

Research shows that as the plume rises from the fire it expands. Generally, when the plume contacts the ceiling its diameter is approximately 40 percent of the ceiling height (0.4*H*), as shown in Exhibit 17.29. Given this fact, as a practical matter, the spacing between any two heat detectors need never be less than 40 percent of the ceiling height. If, when applying other reduction factors, the resulting spacing was 0.3*H*, then the minimum requirement of 0.4*H* would take precedence. At 40 percent of the ceiling height, there will always be one, and possibly two, heat detector(s) exposed directly to the rising fire plume from a fire on the floor below. Although the temperatures do vary across the width of the plume at ceiling level, the intent is not to intercept the maximum temperature zone of the rising plume but, rather, know that a detector will intercept the plume as it first reaches the ceiling. Consequently, no practical advantage is accrued where heat detectors are installed with spacings smaller than 40 percent of the ceiling height, given that most heat detection spacing schemes are based on detecting the heat transfer from the ceiling jet zone and not the higher temperature plume ceiling-strike zone.

In some circumstances, particularly with high ceilings and small design fires, the designer must understand that further reductions in the detector spacing cannot improve the system response. When the

detector spacing is reduced to less than 0.4 of the ceiling height, a detector is in the plume regardless of the fire location. Because the temperature and velocity gradients across the plume are not large, further spacing reductions likely will not enhance system performance. The design goals for the hazard area might require a faster response than that attainable from heat detectors. Under this set of circumstances, the designer will have to consider other types of detection.

Consider the following example: A heat detection system using spot detectors with a listed spacing of 25 ft (7.6 m) are to protect an area with a 29 ft (8.8 m) high ceiling. Per the ceiling height reduction factors of Table 17.6.3.5.1, 25 ft (7.6 m) multiplied by 0.34 equates to a reduced spacing of 8.5 ft (2.6 m) between detectors. However, since the minimum spacing need not be less than 40 percent of the ceiling height (0.4*H*), the spacing need only be reduced to 11.6 ft (3.5 m) [0.4 × 29 ft (8.8 m)].

17.6.3.6* Integral Heat Sensors on Combination and Multi-Sensor Detectors. A heat-sensing detector integrally mounted on a smoke detector shall be listed for not less than 50 ft (15.2 m) spacing.

A.17.6.3.6 The linear space rating is the maximum allowable distance between heat detectors. The linear space rating is also a measure of the heat detector response time to a standard test fire where tested at the same distance. The higher the rating, the faster the response time. This Code recognizes only those heat detectors with ratings of 50 ft (15.2 m) or more.

Some smoke detectors are equipped with an integral heat sensor. Due to the customary 30 ft (9.1 m) spacing of smoke detectors and because they primarily fulfill an early warning role, if the heat detector is needed in addition to the smoke detector, the heat detector should be sensitive enough to provide a response before the fire has grown to an excessive size. For the heat sensor portion of the detector to fulfill this expectation, it must have a minimum 50 ft (15.2 m) spacing factor.

See Exhibit 17.30 for an example of a combination smoke and heat detector. The entrance to the smoke-sensing chamber is shown at the center with heat-sensing thermistors on either side.

17.6.3.7 Other Applications. Where a detector is used in an application other than open area protection, the manufacturer's published instructions shall be followed.

17.6.3.8 Alternative Design Methods. Annex B shall be permitted to be used as one alternative design method for determining detector spacing.

The computational method for heat detection system design presented in Annex B is based on first principles of physics and experimental correlations. This method serves as an alternative design to the prescriptive criteria in 17.6.3. Designers who elect to use Annex B should involve the authority having

System Design Tip

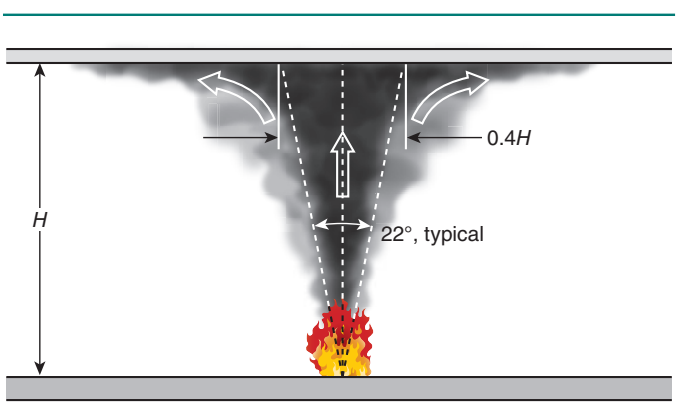

EXHIBIT 17.29

Generally Accepted Behavior of Axisymmetric Fire Plume and Ceiling Jet.

EXHIBIT 17.30

Smoke Detector with 50 ft (15.2 m) Listed Heat Detection. (Source: System Sensor Corp., St. Charles, IL)

jurisdiction. Although the design method in Annex B can lead to detector spacings that exceed the listed spacing, it does not mean the spacings are wrong. Where the design objectives, fire behavior, and compartment dimensions differ from those in the standard fire test room, different spacing would be expected. The performance that characterizes a particular fire will likely be quite different from the characteristics of the test fire used to evaluate the detector for listing.

17.7 Smoke-Sensing Fire Detectors.

The definition of the term *smoke detector* can be found in 3.3.70.20. Also refer to the definitions in 3.3.276 for the mode of operation of each type of smoke detection.

17.7.1 General.

17.7.1.1* The smoke detection design documentation shall state the required performance objective of the system.

A.17.7.1.1 The performance objective statement should describe the purpose of the detector placement and the intended response of the fire alarm control unit to the detector activation. This statement can include a narrative description of the required response time of the detectors, a narrative of the sequence of operations, a tabular list of programming requirements, or some other method.

The performance objective of a fire detection system is usually expressed in terms of time and the size fire the system is intended to detect, measured in British thermal units per second (Btu/sec) or kilowatts (kW). Typically, the fire alarm system designer does not establish this criterion. It is usually obtained from the design documentation prepared by the designer responsible for the strategy of the structure as a whole. Where a prescriptive design is being provided, this requirement is fulfilled by stating in the design documentation that the design conforms to the prescriptive provisions of this Code.

System Design Tip

The designer has two routes in the design of a fire detection system using smoke detectors. One route is to use the performance-based process, in which the designer follows the prescribed spacing and location criteria in the Code. The second route is the use of the performance-based design methods outlined in Annex B. Also see the commentary following Section 17.3. In either case, the performance objective of the system must be stated in the smoke detection design documentation.

Smoke detectors are required by the relevant building code where a life safety objective is to be achieved. Smoke detectors are also used where a property conservation objective justifies early warning. The term *early warning* is not defined and can be interpreted in many ways. In general, it implies that detection is achieved during the insipient stage of a fire, which typically produces more smoke than heat when ordinary combustibles are involved. Thus, smoke detection is considered to provide an earlier warning than heat detection when installed in a normal building environment.

Customarily, smoke detectors are spaced using a 30 ft (9.1 m) spacing. Industry experience suggests that this spacing is adequate to achieve the life safety objectives implied by the building codes. If the objective for the fire detection system is other than life safety, some other spacing could conceivably be more appropriate, meaning that it would achieve the response objectives with the minimum number of smoke detectors. It is imperative that the design documentation state explicitly the objectives the system is meant to achieve.

FAQ What types of fire are assumed in the methods in Annex B for predicting the actuation of smoke detectors?

Annex B provides two methods for predicting the actuation of smoke detectors for fires that produce a buoyant plume. The applicability of Annex B to buoyant plume fires for smoke detector design is limited

because both methods use conservation of momentum and energy relationships to infer temperature at a given location relative to the fire centerline. The methodology then uses correlations to temperature to infer the probable optical density or mass density at the detector locations. Because both methods assume a buoyant plume and a ceiling jet as the mechanism of smoke transfer, the validity of these methods is limited to a flaming fire.

Popular computer models, such as FPETOOL and FastLite, treat the smoke detector as a very sensitive (RTI = 1) heat detector. These models usually presume that a smoke detector will actuate when a temperature rise of 20°F (13°C) occurs at the detector. This simplified assumption of a correlation of temperature to smoke density was introduced in early research [Schifiliti, 1986]. Many researchers now consider this estimate extremely conservative. Algorithms are used in FDS to predict the temperature, mass, and velocity of the ceiling jet to infer the operation of a smoke detector.

Computational methods outlined in Annex B provide a more analytical and precise method of determining detector spacing if a specific fire-size criterion has been established for smoke detection system response. In some applications, these methods can yield smoke detector spacings that are considerably greater than the customary prescriptive spacing of 30 ft (9.1 m).

System Design Tip

The designer must understand the behaviors of the fire plume and the ceiling jet to understand how the building structure can affect the flow of smoke through the compartment and from one compartment to others. The site evaluation includes an audit of all combustibles within the compartment, as well as all ignition sources, including transient ones [Babrauskas, et al., 1982; Heskestad and Delichatsios, 1986, 1995]. The designer models the fires to obtain an estimate of the rate of fire growth for each combustible and ignition source scenario and then compares the fire scenarios to the performance objectives for the compartment. This procedure leads to a basis for design.

Without sound performance metrics and validated modeling methods for smoke detectors, the selection of detector locations often becomes more of an art than a science. Most manufacturers recommend a spacing of 30 ft (9.1 m) on center. The convention of using 30 ft (9.1 m) can only be attributed to observations over many years that listed detectors, when used on that spacing, seem to provide the level of performance expected of them.

17.7.1.2* Designs not in accordance with 17.7.1.3 shall be deemed prescriptive designs and shall be designed in accordance with the prescriptive requirements of this chapter.

A.17.7.1.2 The person designing an installation should keep in mind that, in order for a smoke detector to respond, the smoke has to travel from the point of origin to the detector. In evaluating any particular building or location, likely fire locations should be determined first. From each of these points of origin, paths of smoke travel should be determined. Wherever practicable, actual field tests should be conducted. The most desired locations for smoke detectors are the common points of intersection of smoke travel from fire locations throughout the building.

NOTE: This is one of the reasons that specific spacing is not assigned to smoke detectors by the testing laboratories.

17.7.1.3* Performance-based designs shall be executed in accordance with Section 17.3.

A.17.7.1.3 In a performance-based design environment, the performance objectives for the fire alarm system are not established by the fire alarm system designer.

A fire protection strategy is developed to achieve those goals. General performance objectives are developed for the facility. These general objectives give rise to specific performance objectives for each fire protection system being employed in the facility. Consequently, the performance objectives and criteria for the fire alarm system are part of a much larger strategy that often relies on other fire protection features, working in concert with the fire alarm system to attain the overall fire protection goals for the facility.

In the performance-based design environment, the designer uses computational models to demonstrate that the spacing used for automatic fire detectors connected to the fire alarm system will achieve the objectives established by the system, by showing that the system

meets the performance criteria established for the system in the design documentation. Consequently, it is imperative that the design objectives and performance criteria to which the system has been designed are clearly stated in the system documentation.

A performance-based design as described in A.17.7.1.1 and A.17.7.1.3 is a holistic process that leads to a design from a starting point of stated, agreed-on, quantified objectives. In most smoke detection system designs, the objective is to detect a fire before it exceeds a specified size, assuming a growing fire. Annex B and "Performance-Based Design and Fire Alarm Systems" at the end of Annex B provide an overview of the process and the methods employed in that process.

17.7.1.4 The prescriptive requirements in this section shall be applied only where detectors are installed in ordinary indoor locations.

Applying prescriptive requirements and recommendations of Section 17.7 is limited to ordinary indoor locations. The authority having jurisdiction must decide whether a hazard area falls into this category. Although the term *ordinary indoor locations* is not defined, outdoor locations are not considered conducive to smoke detectors due to the variable, uncontrolled conditions of wind, humidity, precipitation, and temperatures. Ordinary indoor locations should be thought of as typical building spaces with relatively constant environmental conditions, or without conditions that would subject the smoke detectors to nuisance alarms. An inside truck dock might qualify as an indoor location but not as an ordinary location due to the vehicle exhaust fumes (e.g., diesel) that would adversely affect smoke detectors.

System Design Tip

Where the application falls outside the conditions assumed for the prescriptive requirements of Section 17.7, the designer must consider the impact of those conditions on the operability and reliability of the detector. In evaluating the reasons why the conditions are not appropriate, the designer might identify an alternative design approach that solves the problem. Some authorities having jurisdiction establish additional requirements for specific types of occupancies that go above and beyond the requirements of Section 17.7. To protect extremely valuable assets, the designer might also reduce the smoke detector spacing in certain areas, such as in a data center or where the owner's fire protection goals demand a faster response. In some cases, the situation might warrant the use of a more fully developed performance-based approach or the use of a different type of fire detection than smoke-sensing fire detection.

System Design Tip

Finally, special compartments, such as switchgear enclosures, laboratories, or wafer fabrication facilities, might not be ordinary indoor locations. Although a particular design might use detectors in these and similar locations, the designer should carefully consider the impact of the environment on both detector response and stability.

17.7.1.5 Where smoke detectors are being installed to control the spread of smoke, they shall be installed in accordance with the requirements of 17.7.5.

Smoke inhalation is the principal cause of death associated with fires. To protect occupants in place, smoke detectors are used to activate the HVAC system or an engineered smoke control system, which automatically controls the flow of smoke. The use of smoke detectors for this purpose is covered in 17.7.5.

17.7.1.6 Smoke detectors shall be installed in all areas where required by other governing laws, codes, or standards or by other parts of this Code.

FAQ Where does *NFPA 72* require the installation of smoke detectors?

System Design Tip

NFPA 72 does not stipulate where or in which occupancies detection must be installed. Rather, the Code establishes how detection must be designed and installed once an applicable law, code, or standard has established the requirement for detection in the occupancy in question.

17.7.1.7 The selection and placement of smoke detectors shall take into account both the performance characteristics of the detector and the areas into which the detectors are to be installed to prevent nuisance and unintentional alarms or improper operation after installation.

The process of detector selection and how the design addresses the criteria outlined in A.17.7.1.8 and A.17.7.1.10 should be documented as part of the project file. See 17.7.1.1.

17.7.1.8* Unless specifically designed and listed for the expected conditions, smoke detectors shall not be installed if any of the following ambient conditions exist:

(1) Temperature below 32°F (0°C)
(2) Temperature above 100°F (38°C)
(3) Relative humidity above 93 percent
(4) Air velocity greater than 300 ft/min (1.5 m/sec)

System Design Tip

The cited temperature, humidity, and airflow criteria reflect the test criteria in the test standards used by the listing agency in the process of the listing evaluation. Different detection technologies are affected differently by these environmental extremes. Although the identification of these effects is beyond the scope of this handbook, the designer must recognize that some detector designs are inherently more forgiving than others.

Tests performed in the process of obtaining a listing ascertain whether a detector meets minimum performance criteria. Specific detectors can be designed to be used effectively in extreme environmental conditions outside these limits. The manufacturer should be consulted if such an application is contemplated.

System Design Tip

Environmental limits could force the designer to consider alternative detection methods. For example, where a hazard area undergoes a broad range of environmental conditions, heat- or radiant energy–sensing detection might be a better choice than smoke detection.

Δ **A.17.7.1.8** Product-listing standards include tests for temporary excursions beyond normal limits. In addition to temperature, humidity, and velocity variations, smoke detectors should operate reliably under such common environmental conditions as mechanical vibration, electrical interference, and other environmental influences. Tests for these conditions are also conducted by the testing laboratories in their listing program. In those cases in which environmental conditions approach the limits shown in Table A.17.7.1.8, the detector manufacturer's published instructions should be consulted for additional information and recommendations.

Δ ***TABLE A.17.7.1.8*** *Environmental Conditions that Influence Smoke Detector Response*

Detection Protection	*Air Velocity >300 ft/min (>91.44 m/min)*	*Altitude >3000 ft (>914.4 m)*	*Humidity >93% RH*	*Temperature <32°F> 100°F (<0°C >37.8°C)*	*Color of Smoke*
Ion	X	X	X	X	O
Photo	O	O	X	X	X
Beam	O	O	X	X	O
Air sampling	O	O	X	X	O

X: Can affect detector response. O: Generally does not affect detector response.

N **17.7.1.9*** Smoke detectors installed in ducts and other locations with air velocities greater than 300 ft/min (1.5 m/sec) shall be listed for the velocity conditions anticipated and installed in accordance with the manufacturer's published instructions.

The typical air velocity testing conditions for ceiling–mounted smoke detectors is 300 ft/min (1.5 m/sec). However, the air velocities in ducts can be far greater than this. Depending on the design and technology used, duct smoke detectors need to be listed for the higher velocity environments found in duct systems.

N **A.17.7.1.9** The velocities indicated in individual duct detector listings are based on applicable standards such as ANSI/UL 268A, *Standard for Smoke Detectors for Duct Application*.

17.7.1.10* The location of smoke detectors shall be based on an evaluation of potential ambient sources of smoke, moisture, dust, or fumes, and electrical or mechanical influences, to minimize nuisance alarms.

A.17.7.1.10 Smoke detectors can be affected by electrical and mechanical influences and by aerosols and particulate matter found in protected spaces. The location of detectors should be such that the influences of aerosols and particulate matter from sources such as those in Table A.17.7.1.10(a) are minimized. Similarly, the influences of electrical and mechanical factors shown in Table A.17.7.1.10(b) should be minimized. While it might not be possible to

TABLE A.17.7.1.10(a) *Common Sources of Aerosols and Particulate Matter Moisture*

Moisture	Humid outside air Humidifiers Live steam Showers Slop sink Steam tables Water spray
Combustion products and fumes	Chemical fumes Cleaning fluids Cooking equipment Curing Cutting, welding, and brazing Dryers Exhaust hoods Fireplaces Machining Ovens Paint spray
Atmospheric contaminants	Corrosive atmospheres Dust or lint Excessive tobacco smoke Heat treating Linen and bedding handling Pneumatic transport Sawing, drilling, and grinding Textile and agricultural processing
Engine exhaust	Diesel trucks and locomotives Engines not vented to the outside Gasoline forklift trucks
Heating element with abnormal conditions	Dust accumulations Improper exhaust Incomplete combustion

Δ ***TABLE A.17.7.1.10(B)*** *Sources of Electrical and Mechanical Influences on Smoke Detectors*

Electrical Noise and Transients	***Airflow***
Vibration or shock	Gusts
Radiation	Excessive velocity
Radio frequency	
Intense light	
Lightning	
Electrostatic discharge	
Power supply	

isolate environmental factors totally, an awareness of these factors during system layout and design favorably affects detector performance.

In applications where the factors listed in Table A.17.7.1.10(a) and Table A.17.7.1.10(b) cannot be sufficiently limited to allow reasonable stability and response times, alternative modes of fire detection should be considered.

17.7.1.11* The effect of stratification below the ceiling shall be taken into account. The guidelines in Annex B shall be permitted to be used.

A.17.7.1.11 Stratification of air in a room can hinder air containing smoke particles or gaseous combustion products from reaching ceiling-mounted smoke detectors or fire–gas detectors.

Stratification occurs when air containing smoke particles or gaseous combustion products is heated by smoldering or burning material and, becoming less dense than the surrounding cooler air, rises until it reaches a level at which there is no longer a difference in temperature between it and the surrounding air.

Stratification also can occur when evaporative coolers are used, because moisture introduced by these devices can condense on smoke, causing it to fall toward the floor. Therefore, to ensure rapid response, it might be necessary to install smoke detectors on sidewalls or at locations below the ceiling.

In installations where detection of smoldering or small fires is desired and where the possibility of stratification exists, consideration should be given to mounting a portion of the detectors below the ceiling. In high-ceiling areas, projected beam–type or air sampling–type detectors at different levels also should be considered. *(See Figure A.17.7.1.11.)*

Regardless of room dimensions or temperature, the potential for stratification must be considered whenever and wherever smoke detectors are employed.

When gaseous combustion products (smoke) form in a fire, they expand due to heat. These expanded gases are less dense than the surrounding air and are buoyed upward. The rising plume gases mix with the surrounding air, entraining the air as the plume flows upward. The entrainment of ambient

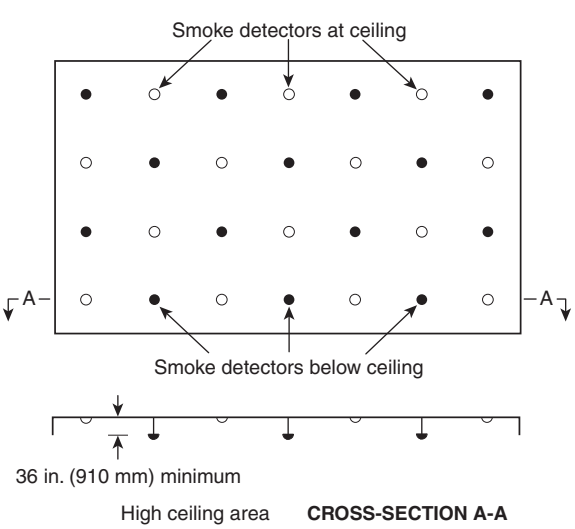

FIGURE A.17.7.1.11 *Smoke Detector Layout Accounting for Stratification.*

air contributes to the cooling of the plume. As long as the plume remains hotter than the surrounding air, it continues to rise and entrain more ambient air. This process results in a V-shaped fire plume that is small at the bottom and grows larger in diameter as it rises. Eventually, the gaseous combustion products in the fire plume are no longer hotter than the surrounding air, and the plume loses buoyancy and spreads out in a layer. If that happens before the fire plume impinges on the ceiling, the smoke will stratify below the ceiling–mounted smoke detectors and response will be delayed until the fire grows sufficiently large to drive the smoke up to the ceiling plane.

A ceiling jet is formed when the plume hits the ceiling with sufficient momentum. The radial flow of the ceiling jet from the plume centerline is the result of the residual momentum of the upward flowing plume gases. This momentum conveys smoke to the detector location. Without a ceiling jet, the smoke and heat from the fire will not move horizontally beneath the ceiling. Most of the spacing criteria for smoke and heat detectors are based on the assumption that a ceiling jet exists and that it is moving the smoke and heat horizontally in a layer immediately beneath the ceiling. Stratification affects the performance of the detection system because the smoke forms a layer too far below the ceiling-mounted smoke detectors.

The objective of detecting the fire before it has achieved a high-energy output requires additional insight into the placement of detectors. A high energy–output flaming fire produces a fire plume that propels smoke and hot air upward. The larger the fire, the higher the plume extends and the greater the air velocity within the plume.

A low energy–output smoldering fire, such as those often encountered in residential, institutional, and commercial occupancies, produces significant quantities of smoke that might lack the energy to reach ceiling-mounted smoke detectors. In these instances, the smoke might be transported to the detectors via diffusion processes, rather than buoyancy-driven processes, resulting in longer smoke detector activation times. It is difficult to address a smoldering situation where high ceilings are involved. If the situation warrants smoke detection for high–challenge smoldering scenarios, then technologies other than spot detection, such as air sampling, video image detection, and beam detection, should be considered.

FAQ What considerations can affect the height at which stratification occurs?

The height at which stratification occurs depends on both the size of the fire and the ambient temperature and temperature gradient of the space. Stratification is most likely to occur when the fire is very small and the floor-to-ceiling temperature difference is relatively high. The calculation guidelines in Annex B show that very small flaming fires (<10 kW, which is less than a small wastebasket fire) have the ability to drive smoke to relatively high ceilings unless the temperature gradient between the floor and the ceiling becomes quite large. For example, a very small fire of 10 kW can reach a ceiling of 47 ft (14.3 m), assuming an ambient temperature gradient of 80°F (26.7°C) at the ceiling and 72°F (22.2°C) at the floor. However, smoke from a larger fire of around 100 kW would stratify at 25 ft (7.6 m) above the floor, if the ambient air temperature increases by 100°F (37.8°C) over that same height. HVAC systems often form a layer of cool air near the floor, while upper zones near the ceiling are not tempered by HVAC equipment. This can create conditions with a similar or greater effect than naturally occurring stratification.

Where stratification can be expected, the location and spacing of smoke detectors must be adjusted. The design of a smoke detection system must address both the spectrum of ambient conditions and the relevant fire scenarios for the space. In areas of high ceilings, layering of detectors or combining detectors to address credible fire scenarios is often necessary. If a second "layer" of detectors is contemplated, remember that the spacing requirements assume the existence of a ceiling jet to move smoke horizontally to the detector. Smoke detectors suspended below the ceiling do not have the benefit of a ceiling jet, and the conventional spacing rules might not be adequate. In the case of suspended spot-type smoke detectors, a spacing of not more than 0.4 times the installed detector height above the floor could be used on the basis of plume divergence. However, this second layer of detectors generally

System Design Tip

does not eliminate the requirement for ceiling-mounted detectors, and the total number of detectors could be impractical. Consequently, beam detectors, air-sampling detectors, or video image detectors might be better choices for stratified detection scenarios.

17.7.1.12* Protection During Construction.

A.17.7.1.12 Construction debris, dust (especially gypsum dust and the fines resulting from the sanding of drywall joint compounds), and aerosols can affect the sensitivity of smoke detectors and, in some instances, cause deleterious effects to the detector, thereby significantly reducing the expected life of the detector.

17.7.1.12.1 Where detectors are installed for signal initiation during construction, they shall be cleaned and verified to be operating in accordance with the listed sensitivity, or they shall be replaced prior to the final acceptance test of the system.

Because renovation and construction activities include numerous fire ignition sources, smoke detection is often required in areas under construction. Where the authority having jurisdiction requires early installation or detection during construction, the detectors must be cleaned and measured for their normal operating sensitivity before the final acceptance test of the system. Detectors that cannot be restored to their design sensitivity range must be replaced.

17.7.1.12.2 Where detectors are installed but not operational during construction, they shall be protected from construction debris, dust, dirt, and damage in accordance with the manufacturer's recommendations and verified to be operating in accordance with the listed sensitivity, or they shall be replaced prior to the final acceptance test of the system.

This requirement applies to existing smoke detectors that remain in place during a renovation, as well as new detectors that are installed but are not operational. This might apply where smoke detection is required only during certain hours or is temporarily disabled during certain activities. However, if smoke detection is not required at any time during construction, new smoke detectors should not be installed, as specified in 17.7.1.12.3.

Many smoke detectors are shipped with a thin plastic cover that fits over the sensing portion of the detector, similar to the one shown in Exhibit 17.31. These covers are widely assumed to be suitable for protecting the detector from construction dust, dirt, and debris. However, most of these covers are merely for protection during shipping and are not intended to be used in lieu of the manufacturer's recommended protection. Therefore, cleaning detectors after all construction trades have finished work is often still necessary.

It should be recognized that any means of keeping dust and debris out of a smoke detector sensing chamber would also impede the entry of smoke. To ensure operability of the system, the contractor must have a means of verifying that all protective measures are removed from the detectors when the construction trades have completed their work.

Before final acceptance of the system, the sensitivity of the detectors must be measured and verified to be in the correct range. Detectors that do not meet and cannot be restored to their design sensitivity range must be replaced.

EXHIBIT 17.31

Smoke Detector with Protective Plastic Cover. (Source: Hochiki America Corp., Buena Park, CA)

17.7.1.12.3 Where detection is not required during construction, detectors shall not be installed until after all other construction trades have completed cleanup.

This requirement applies only to the installation of new detectors. Refer to 17.7.1.12.1 or 17.7.1.12.2 for existing smoke detectors that remain in place during a renovation.

Many unwanted alarms are caused by smoke detectors installed too early in the construction process. Construction activities produce airborne dust that inevitably finds its way into detectors, contaminating them and making them prone to unwanted alarms. Unless detection is required while the area is under construction, experience has shown that the best practice is not to install smoke detectors until all construction cleanup is completed.

17.7.2* Sensitivity.

A.17.7.2 Throughout this Code, smoke detector sensitivity is referred to in terms of the percent obscuration required to alarm or produce a signal. Smoke detectors are tested using various smoke sources that have different characteristics (e.g., color, particle size, number of particles, particle shape). Unless otherwise specified, this Code, the manufacturers, and the listing agencies report and use the percent obscuration produced using a specific type of gray smoke. Actual detector response will vary when the characteristics of the smoke reaching the detector are different from the smoke used in testing and reporting detector sensitivity.

System Design Tip

Listing agencies base the listings of smoke detectors on repeatable laboratory tests. These tests do not necessarily correlate to actual fires in actual applications, and the listing agencies do not provide a listed spacing for smoke detectors as they do for heat detectors.

One of the tests conducted in the course of a listing investigation is a sensitivity measurement. A smoke box using a cotton lamp wick under controlled airflow is used to produce a light gray smoke with a controlled rate of optical density increase per unit of time. The manufacturer marks the detector with its sensitivity, based on the response obtained in the smoke box test as outlined in the listing investigation standard used. However, the sensitivity measurements obtained from the test are relevant only in the context of the smoke box and smoke used. The measurements are not intended to predict performance in any other context — a marking of a nominal smoke obscuration of 0.6 percent to 4.0 percent obscuration per foot does not necessarily mean that an installed detector will respond to a real fire at that level of optical obscuration. Because the level of optical obscuration at which an alarm signal is generated can be very different in a real compartment fire from that obtained in a smoke box, a designer should not base a design on the marked sensitivity.

Full-scale room fire tests are also conducted during the listing evaluation of a smoke detector. The fire test room has a ceiling height of 10 ft (3.0 m). In accordance with ANSI/UL 268, *Standard for Smoke Detectors for Fire Alarm Systems*, smoke detectors are required to render an alarm when subjected to fires that ultimately produce smoke obscurations of 37 percent per foot for a paper fire, 17 percent per foot for a wood fire, 5 percent for a flaming polyurethane foam fire, 12 percent for a smoldering polyurethane foam fire, and 10 percent per foot for a smoldering wood fire. Additionally, smoke detectors are required not to render an alarm before a smoke obscuration of 1.5 percent per foot is produced in the cooking nuisance smoke test. These pass/fail tests also do not provide a meaningful basis for predicting smoke detector performance.

17.7.2.1* Smoke detectors shall be marked with their nominal production sensitivity and tolerance in percent per foot (percent per meter) obscuration, as required by the listing.

A.17.7.2.1 The production sensitivity range should only be used as a benchmark for testing and should not be used as the sole basis for selection of devices. The percent per foot sensitivity marked on the smoke detector is derived from testing in a smoke chamber, usually referred to as the ANSI/UL 268 Smoke Box. The measurements derived from this measurement apparatus are only valid in the context of the apparatus and cannot be used outside the context of the smoke box. The polychromatic light source employed in the smoke box results in measurements that are highly dependent upon smoke color and does not account for variations in light transmission as a function of wavelength that occurs as fuels and fire ventilation rates change or as smoke ages. Furthermore, the measurement apparatus uses a measurement

of light obscuration by smoke to infer a measure of light reflectance when there is no correlation between these two optical characteristics.

FAQ To what does percent per foot obscuration relate?

Because the mission of most smoke detection systems is the protection of human life, the response of a smoke detector is usually defined in human terms. The percent per foot obscuration method of measuring sensitivity relates to a person's ability to see well enough to escape from a fire. Smoke is composed of both visible and invisible gases and particulate matter. Although the portion of the smoke that is invisible has little immediate impact on an individual's ability to escape, it can constitute the majority of the smoke mass under some fire conditions.

The marking of the detector with its sensitivity does allow for the testing of the unit and comparison of its present sensitivity to its initial nominal production sensitivity. Refer to the commentary following A.17.7.2 for an explanation of how the sensitivity marked on a smoke detector is obtained and what it means with respect to performance in actual fires.

17.7.2.2 Spot-type smoke detectors that have provision for field adjustment of sensitivity via a mechanical means shall have an adjustment range of not less than 0.6 percent per foot (1.95 percent per meter) obscuration.

The adjustment of detector sensitivity over a range of less than 0.6 percent per foot has little, if any, practical benefit. Even where smoke detectors are used for property protection, such as in data centers, the difference in response represented by an adjustment range of less than 0.6 percent per foot is minor.

17.7.2.3 If the means of adjustment of sensitivity is on the detector, a method shall be provided to restore the detector to its factory calibration.

Some smoke detectors have a feature that allows the adjustment of detector sensitivity to accommodate the immediate ambient conditions in the area of the detector. If maintenance personnel use the adjustment feature between cleaning intervals to maintain stability, they should restore the detector to its original design sensitivity after it has been cleaned. Chapter 14 covers the maintenance of smoke detectors.

17.7.2.4 Detectors that have provision for program-controlled adjustment of sensitivity shall be permitted to be marked with their programmable sensitivity range only.

Most addressable/analog smoke detectors have provisions for detector sensitivity adjustment by means of the system software. These smoke detectors send a voltage or current value back to the control unit that is proportional to the concentration of smoke sensed by the detector. In such a case, the detector's trip point is often a voltage or current level stored in the control unit memory. Consequently, the adjustment of the detector's activation point is actually the adjustment of the activation value stored in memory for that detector. When a provision for the adjustment of the detector sensitivity is at the control unit, there must be a means to restore the detector to its factory sensitivity. The manufacturer must mark the detector to show the sensitivity range. If maintenance personnel use the adjustment feature between cleaning intervals to maintain stability, they should restore the detector to its original design sensitivity after it has been cleaned. Chapter 14 covers the maintenance of smoke detectors.

17.7.3 Location and Spacing.

As with heat detectors, smoke detectors rely primarily on plume and ceiling jet flows to transport the smoke from a fire to the detector. Note the similarity in the location criteria between smoke detectors and heat detectors.

Criteria for a given type of smoke detector are organized in a single section. All the spot-type detector criteria are in 17.7.3.2 through 17.7.3.5. The criteria for air sampling–type detectors are in 17.7.3.6, and the criteria for projected beam–type detectors are in 17.7.3.7.

17.7.3.1* General.

A.17.7.3.1 Except in the case of smoldering, low-energy fires, all smoke detectors, regardless of the type of technology, usually rely on the plume and ceiling jet produced by the fire to transport the smoke upward and across the ceiling to the detector, sampling port, or projected sensing light beam. Once sufficient concentration is attained at the detector, sampling port, or sensing light beam location and, in the case of spot-type detectors, sufficient flow velocity is attained to overcome the flow resistance into the sensing chamber, the detector responds with an alarm signal. Detectors are usually mounted at the ceiling plane to take advantage of the flow provided by the plume and the ceiling jet. A hot, energetic fire produces large plume velocities and temperatures and hot, fast ceiling jets. This minimizes the time it takes for the smoke to travel to the detector. A smoldering fire produces little, if any, plume and no appreciable ceiling jet. Far more time elapses between ignition and detection under this circumstance.

17.7.3.1.1 The location and spacing of smoke detectors shall be based upon the anticipated smoke flows due to the plume and ceiling jet produced by the anticipated fire, as well as any pre-existing ambient airflows that could exist in the protected compartment.

System Design Tip

When determining the location and spacing of smoke detectors, the designer must consider how smoke is likely to flow. The likely flow of smoke depends on the ambient conditions as well as the fire. In some cases, the ambient airflow can be deduced by inspection. In other cases, the use of a velometer or an anemometer can be helpful in determining the direction and the speed of ambient air currents that constitute the dominant ambient air movement in the compartment or space. The flow of the plume and the ceiling jet depends on the fuel load, the ambient conditions, and the location of the fire within the space. Usually, the behavior of the fire plume cannot be determined by direct measurements. Computational fluid dynamics programs can be used to model airflows if necessary.

System Design Tip

The designer must analyze the space as part of the design process, even when using a prescriptive design. A prudent designer will document this analysis for future reference. If the air movement patterns are changed in the protected space after the system has been installed, the relocation of smoke detectors might be advisable.

17.7.3.1.2 The design shall account for the contribution of the following factors in predicting detector response to the anticipated fires to which the system is intended to respond:

(1) Ceiling shape and surface
(2) Ceiling height
(3) Configuration of contents in the protected area
(4) Combustion characteristics and probable equivalence ratio of the anticipated fires involving the fuel loads within the protected area
(5) Compartment ventilation
(6) Ambient temperature, pressure, altitude, humidity, and atmosphere

These general criteria are far less specific than those established for heat detectors. The reasoning can be understood by a review of the importance of fire plume dynamics in the location and spacing of heat detectors versus smoke detectors.

Heat detectors depend on the fire plume and ceiling jet to carry hot gaseous combustion products and entrained air to the detector where heat can flow from the ceiling jet into the detector, resulting in an alarm. Although not explicitly stated in the Code, heat detectors are generally used where response is needed once the fire has achieved an energy output of at least 1.2 MW, which is the size of fire used in determining the listed spacing for a heat detector. This size of fire discharges a significant quantity of energy, which serves as the engine that creates its own air currents. The energy from the fire propels the hot air and smoke mixture across the ceiling. As a result, the fire is the dominant air mover in the compartment.

FAQ

What is the dominant factor in predicting smoke flow under smoldering, low-energy-output fire conditions?

Under smoldering, low-energy-output fire conditions, the fire does not yet represent an energy output (heat release rate) sufficient to serve as the primary source of propulsion for the smoke. Existing air currents through the area dominate the flow of smoke with little, if any, contribution from the fire. The flow of smoke is far more dependent on site-specific airflow variables.

Modeling the flow of the fire plume and ceiling jet is possible with computer programs such as FDS that apply the rules of fluid flow physics and thermodynamics to the plume from a fire. If explicit modeling is not used, the designer must determine the location and spacing of smoke detectors based on how the site-specific environmental features will affect the flow of smoke from early-stage, low-energy-output fires.

System Design Tip

17.7.3.1.3 If the intent is to protect against a specific hazard, the detector(s) shall be permitted to be installed closer to the hazard in a position where the detector can intercept the smoke.

Usually, the design process begins by locating detectors so that they will provide general area protection. Additional detectors are added or positions adjusted to take into account known or anticipated ignition sources and known air currents. Detectors may be placed closer to hazards like switchgear enclosures, power supplies, and similar assets with known histories of ignition.

17.7.3.2* Spot-Type Smoke Detectors.

A.17.7.3.2 In high-ceiling areas, such as atriums, where spot-type smoke detectors are not accessible for periodic maintenance and testing, projected beam–type or air sampling–type detectors should be considered where access can be provided.

The importance of accessibility and the maintenance of a smoke detection system cannot be overemphasized. The designer must exercise judgment and discretion to provide a system that can be maintained pursuant to the criteria established in Chapter 14. Paragraph A.17.7.3.2 clarifies 17.4.3, which requires that all initiating devices, including smoke detectors, be installed in a way that they can be maintained effectively.

System Design Tip

Atria and other areas with exceptionally high ceilings — auditoriums, gymnasiums, exhibit halls, storage facilities, and some manufacturing facilities — represent very difficult situations for the use of spot-type smoke detection. Stratification of smoke, accessibility for maintenance and testing, and dissipation of smoke could warrant the use of other types of detection. Paragraph A.17.7.3.2 advises the designer to consider either air sampling or projected beam–type smoke detection as alternatives that might resolve these concerns. However, note that the air-sampling ports of an air sampling–type detector are treated as individual spot-type detectors. Since air sampling–type detectors rely on the plume

System Design Tip

and ceiling jet to carry smoke to the sampling ports, air sampling–type detectors might not represent an advantage over traditional spot-type detectors where stratification is a concern. The beams of projected beam–type smoke detection must be carefully located where stratification is a concern for the design fire to be detected. Video image smoke detection might also be a potential solution. Annex B provides additional information on how to predict the elevation of a stratification plane under known conditions.

17.7.3.2.1* Spot-type smoke detectors shall be located on the ceiling or, if on a sidewall, between the ceiling and 12 in. (300 mm) down from the ceiling to the top of the detector.

A.17.7.3.2.1 Refer to Figure A.17.7.3.2.1 for an example of proper mounting for detectors. Sidewall detectors mounted closer to the ceiling will respond faster.

System Design Tip

Before the 2013 edition of the Code, ceiling-mounted smoke detectors were not permitted within 4 in. (100 mm) of a sidewall, and sidewall-mounted smoke detectors were not permitted within 4 in. (100 mm) of the ceiling. The concern was that smoke flow would be compromised in a "dead-air space" in the corner where the ceiling and the wall meet. However, computational fluid dynamics simulations have predicted that smoke will flow into such corners for a range of room geometries and ceiling heights, thereby removing the dead-air space concern. [Note that the 4 in. (100 mm) prohibition still applies to heat detectors. See 17.6.3.1.3.1.]

The location requirement is valid for both a low-energy incipient fire and a high-energy output fire that is immediately life threatening. Either the normally existing air currents or the fire plume and ceiling jet from the larger fire will convey smoke to ceiling-mounted detectors. While the ceiling-wall corner is permitted, it might not be the most desirable location. For the detectors to respond, they must be installed in the working air volume of the compartment. The designer should avoid locating detectors in tight corner spaces that may inhibit sufficient airflow and circulation of smoke into the detector entry points.

17.7.3.2.2* To minimize dust contamination, smoke detectors, where installed under raised floors, shall be mounted only in an orientation for which they have been listed.

A.17.7.3.2.2 Figure A.17.7.3.2.2 illustrates underfloor mounting installations.

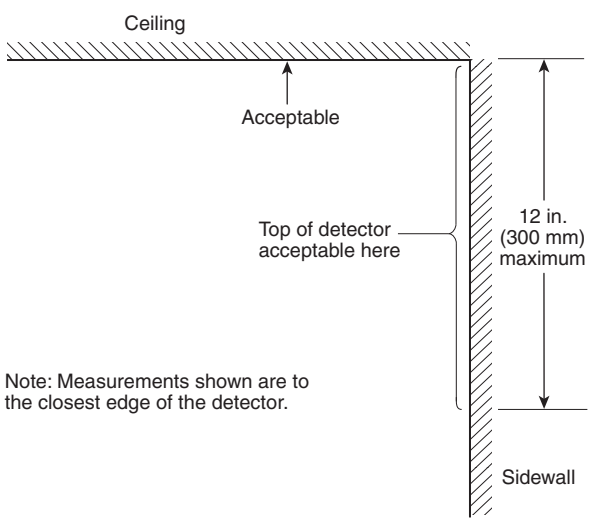

FIGURE A.17.7.3.2.1 *Example of Proper Mounting of Smoke Detectors.*

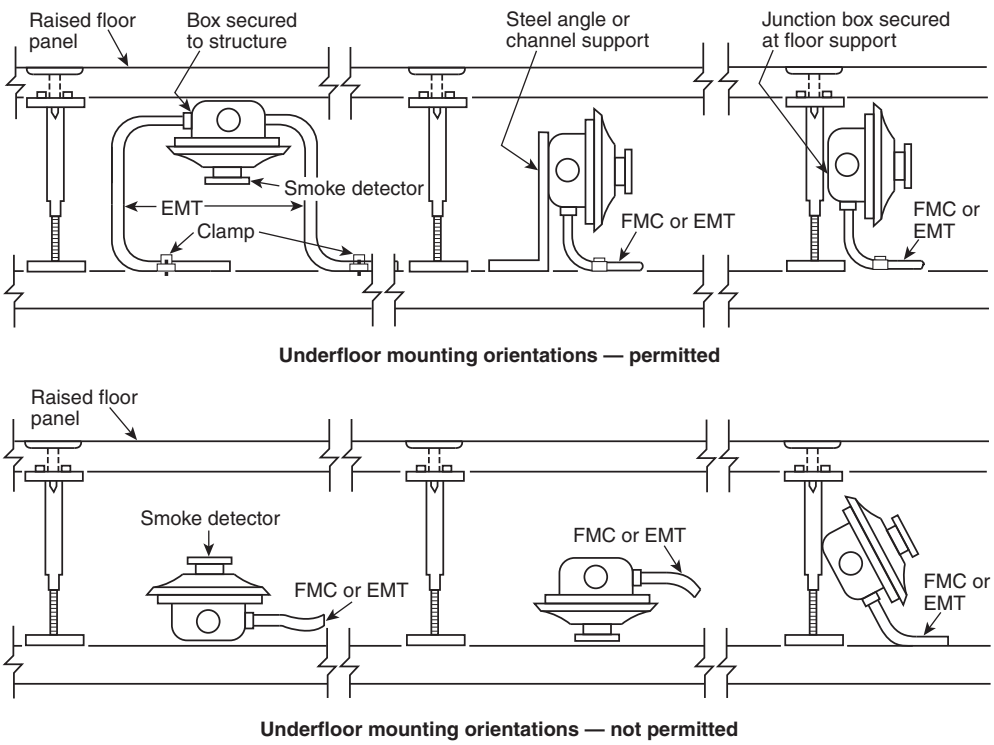

FIGURE A.17.7.3.2.2 *Mounting Installations Permitted (top) and Not Permitted (bottom).*

The fast-moving air in a data center under-floor space has sufficient energy to suspend dust. As that air enters the detector, it slows down and the suspended dust settles in the detector. The accumulation of dust within a smoke detector has an effect similar to that of smoke. In an ionization smoke detector, the dust impedes the flow of current within the chamber. In a spot-type photoelectric detector, the dust increases the reflectance within the chamber. The dust causes each type of detector to become more sensitive, increasing the likelihood of unwanted alarms. The permitted orientations shown in Figure A.17.7.3.2.2 (top) minimize the possibility of dust falling into the detector from the floor and also minimize the effect of air-conveyed dust on the detector.

Other concerns reinforce the benefits of positioning detectors as shown in Figure A.17.7.3.2.2 (top). The detector is placed in the upper half of the under-floor volume. Because the purpose of the under-floor space is to allow the routing of cables between equipment, the floor is usually covered with cable. This cable has the same effect on the flow of air in the under-floor volume that joists have on airflow in a room. The cables create turbulence and force the flow to be concentrated in the upper half of the under-floor volume. Placing the detector in the upper half of the under-floor volume improves the system's ability to respond to an early-stage fire.

Another reason for positioning detectors as shown in Figure A.17.7.3.2.2 (top) is that detectors mounted in the upper half of the under-floor volume are far less likely to be damaged as new cables are installed or old cables are removed or rerouted through the under-floor space. Where water-cooled computers are in use, the detectors are less likely to become wet if the computer cooling system leaks. Also, when air is not flowing, the detectors will be in the best orientation for detection. Figure A.17.7.3.2.2 (top) shows the detectors in the orientation for which they have been tested and listed.

17.7.3.2.3 On smooth ceilings, spacing for spot-type smoke detectors shall be in accordance with 17.7.3.2.3.1 through 17.7.3.2.3.4.

17.7.3.2.3.1* In the absence of specific performance-based design criteria, one of the following requirements shall apply:

(1) The distance between smoke detectors shall not exceed a nominal spacing of 30 ft (9.1 m) and there shall be detectors within a distance of one-half the nominal spacing, measured at right angles from all walls or partitions extending upward to within the top 15 percent of the ceiling height.

(2)* All points on the ceiling shall have a detector within a distance equal to or less than 0.7 times the nominal 30 ft (9.1 m) spacing (0.7*S*).

A.17.7.3.2.3.1 The 30 ft (9.1 m) spacing is a guide for prescriptive designs. The use of such a spacing is based upon customary practice in the fire alarm community.

Where there are explicit performance objectives for the response of the smoke detection system, the performance-based design methods outlined in Annex B should be used.

For the purposes of this section, "nominal 30 ft (9.1 m)" should be determined to be 30 ft (9.1 m) ±5 percent [±18 in. (460 mm)].

System Design Tip

Although the 30 ft (9.1 m) spacing criterion is a requirement, 17.7.1.3 effectively permits designers to use any other spacing they deem appropriate as a performance-based alternative.

The spacing requirements for spot-smoke detectors relative to walls, partitions, and any point on the ceiling are consistent with those applied to spot-type heat detectors. The concept of detector spacing was developed in the context of heat detectors, where the testing laboratories have test standards that compare the response of a given heat detector with that of a fire suppression sprinkler head. (See 'A Closer Look' after 17.6.3.1.1.) The results of the test establish a listed spacing for the detector under test. Since the fire in the test is in the center of a square array of detectors, the distance between the fire and the detectors is equivalent to 0.7 times the spacing between detectors. The detector can be viewed as covering a circular area that encompasses the square array. This concept, called a circle of coverage, is shown in Figure A.17.6.3.1.1(d).

If the detector is capable of covering any point within the circle of coverage, then detectors can be placed in rectilinear arrays, as long as the rectangular area assigned to each detector falls within that same circle of coverage. This arrangement is shown in Figure A.17.6.3.1.1(g). Consequently, a detector spacing of 30 ft (9.1 m) does not necessarily mean that the space between adjacent detectors cannot be greater than 30 ft (9.1 m). As shown in Figure A.17.6.3.1.1(g), if a detector is assigned a coverage area of 10 ft (3.1 m) by 41 ft (12.5 m), which is permitted under a 30 ft (9.1 m) "spacing," and two such rectangular areas are stacked end-to-end, such as might be encountered in a corridor, there will be a distance of 42 ft (12.8 m) between adjacent detectors. This arrangement makes intuitive sense when the effect that walls have on channeling the ceiling jet produced by a fire is considered.

FAQ What is the reason for the 30 ft (9.1 m) "spacing" requirement for spot-type smoke detectors?

According to the listing investigations performed on smoke detectors, no full-scale fire test establishes a listed spacing for smoke detectors. One reason is because a sufficiently explicit response criterion against which a smoke detector can be measured has not been established. However, experience has shown that installing smoke detectors using a nominal 30 ft (9.1 m) spacing criterion achieves the necessary life safety objectives. Where the owner and other relevant stakeholders have objectives other than life safety or are applying a performance-based design, a different spacing criterion might be appropriate. That criterion could be developed using the performance-based methods outlined in Annex B or other acceptable methods.

It is not intended that enforcement authorities measure smoke detector–to–smoke detector spacings with critical precision. The nominal plus or minus 5 percent criterion set forth in A.17.7.3.2.3.1 is intended to provide some latitude in enforcement. The development of a fire and the

extension of smoke through a real space are highly variable. A difference in smoke detector spacing of as much as 2 ft or 3 ft (0.61 m to 0.91 m) will have no material effect on the ultimate performance of the system.

A.17.7.3.2.3.1(2) This is useful in calculating locations in corridors or irregular areas *[see 17.6.3.1.1 and Figure A.17.6.3.1.1(h)]*. For irregularly shaped areas, the spacing between detectors can be greater than the selected spacing, provided the maximum spacing from a detector to the farthest point of a sidewall or corner within its zone of protection is not greater than 0.7 times the selected spacing (0.7*S*).

System Design Tip

The concepts behind the spacing of smoke detectors follow directly from the concepts developed for heat detectors. Paragraph A.17.6.3.1.1 develops the concepts that enable a designer to determine the area that will be covered by a detector. That area can vary in shape if the distance from the detector to the farthest point to be covered by the detector does not exceed 0.7 times the selected spacing. See Figure A.17.6.3.1.1(a) through Figure A.17.6.3.1.1(h) for a graphical representation of these mathematical concepts.

17.7.3.2.3.2 In all cases, the manufacturer's published instructions shall be followed.

When a manufacturer, through its own testing and research program, publishes a specific spacing recommendation that is different from the 30 ft (9.1 m) spacing, that spacing recommendation becomes an enforceable part of this Code.

17.7.3.2.3.3 Other spacing shall be permitted to be used depending on ceiling height, different conditions, or response requirements.

System Design Tip

In the prescriptive design environment, a spacing other than 30 ft (9.1 m) can be used if the justification for doing so is based on the fire dynamics, environment, compartment dimensions, and response objectives. The criteria imply, but do not explicitly require, a formal design process such as that required by 17.7.1.3. The designer should document the basis for selecting a spacing other than 30 ft (9.1 m), and that document should become a permanent part of the project file. The selected spacing will be subject to review and approval by the authority having jurisdiction.

17.7.3.2.3.4 For the detection of flaming fires, the guidelines in Annex B shall be permitted to be used.

System Design Tip

Currently, no computational models are designed to develop predictions of smoke flow for nonflaming fires. Where the design objective is the detection of a smoldering fire, the designer should model ambient compartment air currents and the power commitment to them to determine to what extent they will dominate the flow of smoke.

Two analytical methods are provided in Annex B. Because these methods rely on plume and ceiling jet dynamics, their use must be limited to scenarios involving flaming fires that produce a buoyant plume. For smoldering fire scenarios, other methods must be used until open flaming commences. Then Annex B methods can be used.

Several available computer models (e.g., FPETOOL, FastLite, and Hazard 1) predict smoke detector activation to the flaming fire scenario. However, it must be noted that these applications use a temperature rise model, not optical density or mass density of smoke, to predict the activation of smoke detectors. Their credibility is limited by the validity of the temperature correlation plugged into the model for smoke detector response.

In this regard, a research paper, *Fire Detection Modeling, State of the Art,* analyzes the ways fire applications predict smoke detector operation and points out the advantages and disadvantages of each method [Schifiliti and Pucci, 1998].

FDS, a computational fluid dynamics model, has become popular for modeling the flow of smoke and fire plumes in rooms and buildings. However, this application is not simple to operate and requires considerable skill to generate reliable simulations. FDS tracks mass, velocity, and temperature. Users of the FDS model must again set numerical values for these parameters, which are then used to infer smoke detector activation.

17.7.3.2.4* For solid joist and beam construction, spacing for spot-type smoke detectors shall be in accordance with 17.7.3.2.4.1 through 17.7.3.2.4.6.

A.17.7.3.2.4 Detectors are placed at reduced spacings at right angles to joists or beams in an attempt to ensure that detection time is equivalent to that which would be experienced on a flat ceiling. It takes longer for the combustion products (smoke or heat) to travel at right angles to beams or joists because of the phenomenon wherein a plume from a relatively hot fire with significant thermal lift tends to fill the pocket between each beam or joist before moving to the next beam or joist.

Though it is true that this phenomenon might not be significant in a small smoldering fire where there is only enough thermal lift to cause stratification at the bottom of the joists, reduced spacing is still recommended to ensure that detection time is equivalent to that which would exist on a flat ceiling, even in the case of a hotter type of fire.

17.7.3.2.4.1 Solid joists shall be considered equivalent to beams for smoke detector spacing guidelines.

When the requirements for spacing spot-type smoke detectors in 17.7.3.2.4 are applied, solid joists and solid beams are treated the same. At the fire sizes normally associated with the response of a smoke detection system, the ceiling jet velocities are relatively low and produce less turbulence at the beam and joist bottoms. Consequently, the effects of beams and joists on the ceiling jet flow are expected to be essentially the same.

17.7.3.2.4.2 For level ceilings, the following shall apply:

(1) For ceilings with beam depths of less than 10 percent of the ceiling height (0.1 *H*), the following shall apply:

(a) Smooth ceiling spacing shall be permitted.

(b) Spot-type smoke detectors shall be permitted to be located on ceilings or on the bottom of beams.

System Design Tip

The designer is permitted to use smooth ceiling spacing under level ceilings where beams and joists extend down from the ceiling surface less than 10 percent of the floor-to-ceiling height, regardless of the beam or joist spacing. Since the thickness of the ceiling jet is generally taken to be equal to the upper 10 percent of the floor-to-ceiling height, beams and joists extending down a depth of less than this thickness are not expected to have a significant effect on the response time of the smoke detector. The farthest a detector should be from the fire is 0.7 times the 30 ft (9.1 m) spacing. Therefore, detectors can be located on either the ceiling or the bottom of the beam. See Exhibit 17.32.

(2) For ceilings with beam depths equal to or greater than 10 percent of the ceiling height (0.1 *H*), the following shall apply:

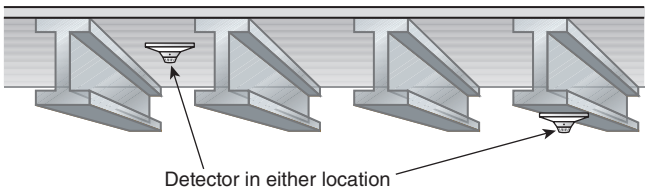

EXHIBIT 17.32

Smoke Detector Locations with Beams Less than 0.1H.

(a) Where beam spacing is equal to or greater than 40 percent of the ceiling height (0.4 *H*), spot-type detectors shall be located on the ceiling in each beam pocket.
(b) Where beam spacing is less than 40 percent of the ceiling height (0.4 *H*), the following shall be permitted for spot detectors:
   i. Smooth ceiling spacing in the direction parallel to the beams and at one-half smooth ceiling spacing in the direction perpendicular to the beams
   ii. Location of detectors either on the ceiling or on the bottom of the beams

The speed with which smoke enters the sensing chamber of a detector is controlled by the velocity of the ceiling jet as it flows past the detector. Where beams or joists extend down from a level ceiling more than 10 percent of the floor-to-ceiling height, they obstruct the ceiling jet flow and cause it to flow more slowly. This could increase the time needed for smoke to enter the detection chamber after the ceiling jet arrives at the detector location.

FAQ

What spacing should be used when beam spacing is greater than 40 percent of the floor-to-ceiling height (0.4*H*)?

Since it is generally accepted that the smoke plume from a fire will diverge at a nominal 22 degrees (see Exhibit 17.29), the width of the plume is assumed to be about 40 percent of the floor-to-ceiling height (0.4*H*). Where the beam spacing exceeds 40 percent of the floor-to-ceiling height, the entire plume can fit within a single beam pocket. If a smoke detector is not in that pocket, the entire bay must fill with smoke before there is fill-and-spill propagation to an adjacent bay where a smoke detector might be. This phenomenon can result in a delayed response. In the case where the beams are both equal to or more than 10 percent of the floor-to-ceiling height in depth and spaced equal to or more than 40 percent of the floor-to-ceiling height, a detector must be installed in each beam pocket, as shown in Exhibit 17.33.

Where the beams are greater than 10 percent of the floor-to-ceiling height and are spaced less than 40 percent of the floor-to-ceiling height, the plume will fill more than one bay regardless of where the plume is relative to the beams. The presence of the beams will retard the flow of the ceiling jet in the direction perpendicular to the beams and channel the flow in the direction parallel to the beams. See Exhibit 17.34.

(3)* For beam pockets formed by intersecting beams, including waffle or pan-type ceilings, the following shall apply:
   (a) For beam depths less than 10 percent of the ceiling height (0.1 *H*), spacing shall be in accordance with 17.7.3.2.4.2(1).
   (b) For beam depths greater than or equal to 10 percent of the ceiling height (0.1 *H*), spacing shall be in accordance with 17.7.3.2.4.2(2).

A.17.7.3.2.4.2(3) The geometry and reservoir effect is a significant factor that contributes to the development of velocity, temperature, and smoke obscuration conditions at smoke

EXHIBIT 17.33

Smoke Detector Location with Beam Depths Greater than 0.1H and Spaced More than 0.4H.

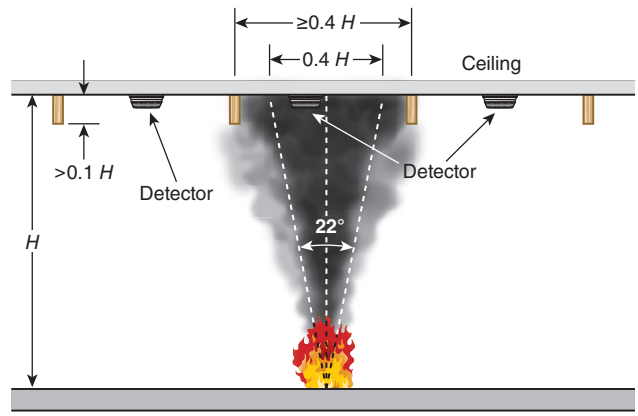

EXHIBIT 17.34

Smoke Detector Location with Beam Depths Greater than 0.1H and Spaced Less than 0.4H.

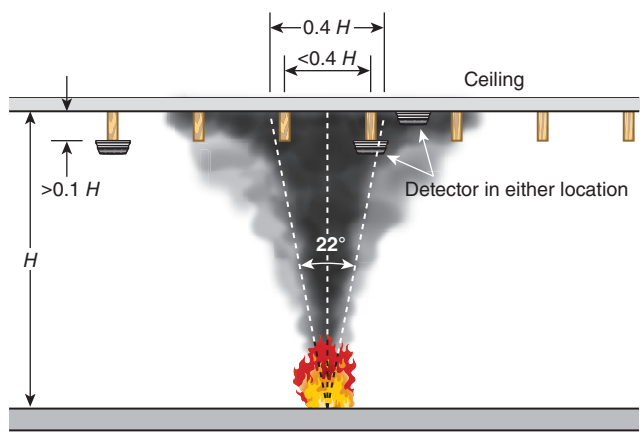

detectors located on the ceiling in beam pocket areas or at the bottom of beams as smoke collected in the reservoir volume spills into adjacent pockets. The waffle- or pan-type ceiling created by beams or solid joists, although retarding the initial flow of smoke, results in increased optical density, temperature rise, and gas velocities comparable to unconfined smooth ceilings.

For waffle- or pan-type ceilings with beams or solid joists, an alternative smoke detector grid arrangement (such as a shifted grid), with detectors located to take advantage of the channeling effect due to the reservoirs created by the beam pockets, will improve detector response and might allow greater spacing. See Figure A.17.7.3.2.4.2(3)(a) and Figure A.17.7.3.2.4.2(3)(b) for an example of shifted grids. The alternative smoke detector grid arrangement and spacing should be justified by an engineering analysis comparing the alternative smoke detector grid arrangement with the performance of smoke detectors on a level ceiling of equal height using 30 ft (9.1 m) smoke detector spacing.

Figure A.17.7.3.2.4.2(3)(a) illustrates the reservoir and channeling effect that results from the deep beam configuration. The strongest gas flows occur in a direction perpendicular to the beam opposite the fire location. The weaker flow occurs in a directional 45 degrees off the beam grid; however, the reservoir effect accounts for higher concentrations of smoke eventually flowing from the strong area reservoirs into the weak area reservoirs.

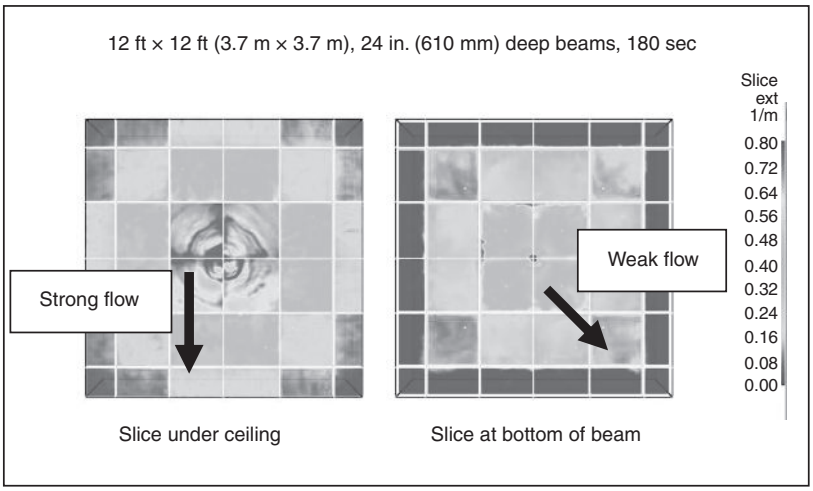

FIGURE A.17.7.3.2.4.2(3)(a) *Reservoir and Channeling Effect of Deep Beams.*

Figure A.17.7.3.2.4.2(3)(b) is a generic example illustrating how a smoke detection grid using 30 ft (9.1 m) spacing can be shifted to take advantage of the channeling and reservoir effect to optimize detection response. In the circle, the fire is split into four beam bays that must fill with smoke before appreciable flows occur into the next adjoining eight beam bays. This represents the worst-case scenario for smoke to reach the detectors on the circle. The three other fire locations shown require the fire to initially fill only one or two bays before spilling to adjacent bays.

Subsection 17.7.3 covers all sets of conditions of beam depth and spacing. The text in A.17.7.3.2.4.2(3) refers to using smooth ceiling spacings under waffle-type ceilings consisting of beam-equivalent elements that are less than the ceiling jet thickness. However, when the beam elements of a waffle ceiling exceed the ceiling jet thickness in depth, a reduced spacing is needed to achieve a response that is equivalent to that for smooth ceilings.

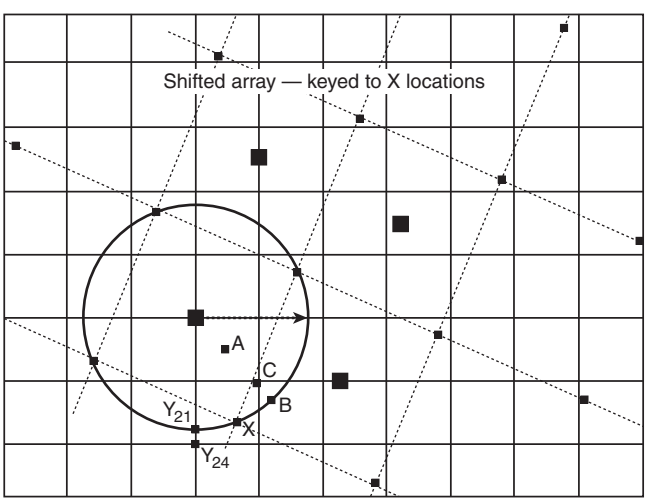

FIGURE A.17.7.3.2.4.2(3)(b) *Shifted Smoke Detection Grid to Optimize Detection for Deep Beam Effects.*

Research performed by Schirmer Engineering has shown that a 30 ft (9.1 m) spacing grid of smoke detectors could be reoriented to take advantage of the strong versus weak smoke flow patterns that develop on gridded deep beam ceilings, as illustrated in Figure A.17.7.3.2.4.2(3)(b). This figure considers the performance of detectors at several locations noted as locations A, B, and C. Of these three locations, location C is a detector mounted under the beams while A and B are on the ceiling in the beam pockets. Also, detectors are at locations X, Y_{21}, and Y_{24} where the 21 and 24 designations represent the radial distance from the centerline vertical axis of the fire location. The circle depicts all possible locations that are 21 ft (6.4 m) from the fire axis, which corresponds to a 30 ft (9.1 m) grid spacing of smoke detectors.

In this example, the detector at the X location is selected as the key position from which all other detectors are distributed on a shifted 30 ft (9.1 m) spacing grid. This X location was chosen because it is in the strong flow pattern from the fire location in the center of the circle, as are locations Y_{21} and Y_{24}. By inspection, the other potential fire locations will result in strong flow patterns to all other detector locations in the shifted grid.

(4)* For corridors 15 ft (4.6 m) in width or less having ceiling beams or solid joists perpendicular to the corridor length, the following shall apply:

(a) Smooth ceiling spacing shall be permitted.
(b) Location of spot-type smoke detectors shall be permitted on ceilings, sidewalls, or the bottom of beams or solid joists.

A.17.7.3.2.4.2(4) Corridor geometry is a significant factor that contributes to the development of velocity, temperature, and smoke obscuration conditions at smoke detectors located along a corridor. This is based on the fact that the ceiling jet is confined or constrained by the nearby walls without opportunity for entrainment of air. For corridors of approximately 15 ft (4.6 m) in width and for fires of approximately 100 kW or greater, modeling has demonstrated that the performance of smoke detectors in corridors with beams has been shown to be comparable to spot smoke detector spacing on an unconfined smooth ceiling surface.

To understand the importance of corridor geometry on constraining the fire plume and ceiling jet, the fires considered were relatively small fires on the order of a medium to large trash can, which equates to a fire size of about 100 kW. Based on the increased smoke densities and gas velocities that develop in corridors, the general smooth ceiling rules can be applied to corridors up to 15 ft (4.6 m) in width, regardless of the beams or joists at the ceiling.

(5) For rooms of 900 ft^2 (84 m^2) or less, the following shall apply:

(a) Use of smooth ceiling spacing shall be permitted.
(b) Location of spot-type smoke detectors shall be permitted on ceilings or on the bottom of beams.

Where smoke detectors are installed in a room of only 900 ft^2 (84 m^2), the small ceiling area constrains the ceiling jet such that even when beams are present, the fire can be detected sufficiently early to achieve the objective. Where other objectives demand more rapid response, performance-based design methods should be employed.

It is not the intent of 17.7.3.2.4.2(5) that the 900 ft^2 (84 m^2) be applied to 5 ft (1.5 m) wide passageways 180 ft (54.9 m) in length, 10 ft (3.1 m) wide corridors 90 ft (27.4 m) in length, or other compartments where the fire hazard and risk are nominally equivalent to the rest of the normally occupied portion of the building. Item (a) requires the use of smooth spacing; see 17.7.3.2.3.1.

17.7.3.2.4.3* For sloping ceilings with beams running parallel up slope, the following shall apply:

(1) Spot-type detector(s) shall be located on the ceiling within beam pocket(s).
(2) The ceiling height shall be taken as the average height over slope.
(3) Spacing shall be measured along a horizontal projection of the ceiling.
(4) Smooth ceiling spacing shall be permitted within beam pocket(s) parallel to the beams.
(5) For beam depths less than or equal to 10 percent of the ceiling height (0.1 *H*), spot-type detectors shall be located with smooth ceiling spacing perpendicular to the beams.
(6) For beam depths greater than 10 percent of the ceiling height (0.1 *H*), the following shall apply for spacing perpendicular to the beams:
    (a) For beam spacing greater than or equal to 40 percent of the ceiling height (0.4 *H*), spot-type detectors shall be located in each beam pocket.
    (b) For beam spacing less than 40 percent of the ceiling height (0.4 *H*), spot-type detectors shall not be required in every beam pocket but shall be spaced not greater than 50 percent of smooth ceiling spacing.

Sloping ceilings are defined in 3.3.38.2 as a ceiling that has a slope of more than 1 in 8 (rise-over-run ratio of 0.125 or an angle of about 7.2 degrees). Any slope less than or equal to 1 in 8 is equivalent to a level ceiling. Beams that are parallel to the slope are perpendicular to the ridge beam of the roof; beams that are perpendicular to the slope are parallel to the ridge beam.

The concept behind these design requirements is analogous to the one regarding heat detectors. When a buoyant plume from a flaming fire impinges on a sloped ceiling, it will progress rapidly upward toward the ridge beam. The buoyancy of the ceiling jet gases accelerates the ceiling jet up the slope. This acceleration provides faster response by detectors that are up-slope from the fire. Computational fluid dynamics modeling demonstrated that the beams are very effective in channeling the smoke in the beam channel up the slope to the peak of the roof. This rapid upward flow reduces the lateral flow parallel to the ridge beam.

A.17.7.3.2.4.3 A smoke detector should be placed within each beam channel. Computer modeling has shown that parallel beams (upslope) are very effective at channeling smoke, and smoke spillover is rarely detectable in adjacent parallel pockets.

Beam channels having beam spacing greater than or equal to 40 percent of the ceiling height (average height over the slope) will need a spot-type smoke detector in each channel. For more closely spaced beams [see 17.7.3.2.4.3(6)(b)], the spacing of spot-type smoke detectors may be extended to 50 percent of the smooth ceiling requirement.

17.7.3.2.4.4* For sloping ceilings with beams running perpendicular across slope, the following shall apply:

(1) Spot-type detector(s) shall be located at the bottom of the beams.
(2) The ceiling height shall be taken as the average height over slope.
(3) Spacing shall be measured along a horizontal projection of the ceiling.
(4) Smooth ceiling spacing shall be permitted within beam pocket(s).
(5) For beam depths less than or equal to 10 percent of the ceiling height (0.1 *H*), spot-type detectors shall be located with smooth ceiling spacing.
(6) For beam depths greater than 10 percent of the ceiling height (0.1 *H*), spot-type detectors shall not be required to be located closer than (0.4 *H*) and shall not exceed 50 percent of smooth ceiling spacing.

Beams that are perpendicular to the slope are parallel to the ridge beam. These beams form dams that prevent the smoke from flowing up the ceiling slope toward the ridge beam. When the smoke encounters a beam running across the slope, the ceiling jet will begin forming a smoke layer. Smoke will flow laterally as the depth of the smoke layer increases. Eventually the smoke layer will become deep enough to spill over the beam and begin filling the next bay. This process is a much slower propagation than when the beams run up the slope. However, the damming effect of the beams will tend to channel smoke across the roof, parallel to the beams. The spacing adjustments in this section are the result of a detailed analysis of the computational fluid dynamics modeling research that was conducted to investigate this issue.

A.17.7.3.2.4.4 Irregular area spacing guidance for level beam ceilings can be used. Computer modeling has shown that spot-type detectors should be located on the bottom of perpendicular beams.

17.7.3.2.4.5* For sloped ceilings with beam pockets formed by intersecting beams, the following shall apply:

(1) Spot-type detector(s) shall be located at the bottom of the beams.
(2) The ceiling height shall be taken as the average height over slope.
(3) Spacing shall be measured along a horizontal projection of the ceiling.
(4) For beam depths less than or equal to 10 percent of the ceiling height (0.1 *H*), spot-type detectors shall be spaced with not more than three beams between detectors and shall not exceed smooth ceiling spacing.
(5) For beam depths greater than 10 percent of the ceiling height (0.1 *H*), spot-type detectors shall be spaced with not more than two beams between detectors, but shall not be required to be spaced closer than (0.4 *H*), and shall not exceed 50 percent of smooth ceiling spacing.

A.17.7.3.2.4.5 Computer modeling has shown that spot-type detectors should be located on the bottom of perpendicular beams and should be aligned with the center of pocket, as shown, in Figure A.17.7.3.2.4.5.

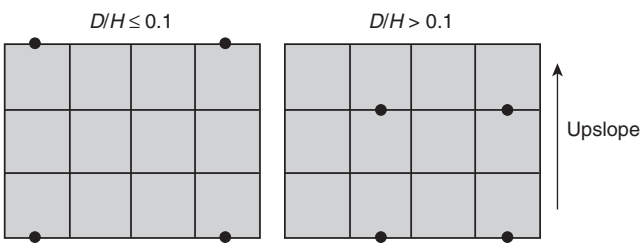

FIGURE A.17.7.3.2.4.5 *Spot-Type Detector Spacing for Sloping Ceilings with Beam Pockets.*

17.7.3.2.4.6 For sloped ceilings with solid joists, the detectors shall be located on the bottom of the joist.

The relatively small channel of space between joists results in smoke filling this space quickly. Once filled, the smoke flows across the bottom of the joists. Locating smoke detectors at the bottom of the joist places them where the dominant flow of smoke is expected to occur. Paragraph 17.7.3.2.4.1 specifies that solid joists be treated as beams for smoke detector spacing guidelines. However, where the beams are actually joists — greater than 4 in. (100 mm) in depth and on centers 3.0 ft (0.9 m) or

less — the detectors must be placed on the bottoms of the joists. Note that bar joists or open web beams do not affect smoke flow unless the solid part of the top cord exceeds 4 in. (100 mm) in depth.

17.7.3.3* Peaked.

A.17.7.3.3 Refer to Figure A.17.6.3.4(a).

N **17.7.3.3.1** Detectors shall first be spaced and located within 36 in. (910 mm) of the peak, measured horizontally.

N **17.7.3.3.2** The number and spacing of additional detectors, if any, shall be based on the horizontal projection of the ceiling.

These criteria apply to all types of smoke detection, including spot-type, air sampling–type, and projected beam–type. Where the ceiling is not level, the plume and the resulting ceiling jet will concentrate smoke in the highest portion of the interior volume. Locating detectors near the peak of the sloped ceiling and at appropriate intervals below that level an optimally responsive design.

17.7.3.4* Shed.

A.17.7.3.4 Refer to Figure A.17.6.3.4(b).

N **17.7.3.4.1** Detectors shall first be spaced and located within 36 in. (910 mm) of the high side of the ceiling, measured horizontally.

N **17.7.3.4.2** The number and spacing of additional detectors, if any, shall be based on the horizontal projection of the ceiling.

See the commentary following 17.7.3.3.2.

17.7.3.5 Raised Floors and Suspended Ceilings. Spaces beneath raised floors and above suspended ceilings shall be treated as separate rooms for smoke detector spacing purposes. Detectors installed beneath raised floors or above suspended ceilings, or both, including raised floors and suspended ceilings used for environmental air, shall not be used in lieu of providing detection within the room.

When total coverage is required by the authority having jurisdiction or other codes, 17.5.3.1 requires detection in all accessible spaces (combustible or noncombustible) and in inaccessible combustible spaces. When these requirements are applied, the spaces beneath raised floors and above suspended ceilings typically require detection using the same location and spacing concepts as required for the occupied portion of a building.

17.7.3.5.1 For raised floors, the following shall apply:

(1) Detectors installed beneath raised floors shall be spaced in accordance with 17.7.3.1, 17.7.3.1.3, and 17.7.3.2.2.
(2) Where the area beneath the raised floor is also used for environmental air, detector spacing shall also conform to 17.7.4.1 and 17.7.4.2.

17.7.3.5.2 For suspended ceilings, the following shall apply:

(1) Detector spacing above suspended ceilings shall conform to the requirements of 17.7.3 for the ceiling configuration.
(2) Where detectors are installed in ceilings used for environmental air, detector spacing shall also conform to 17.7.4.1, 17.7.4.2, and 17.7.4.4.

17.7.3.6 Air Sampling–Type Smoke Detector.

System Design Tip

Air sampling–type detectors are defined in 3.3.70.1. These detectors use an aspirating fan to draw air from the hazard area through a sampling pipe network to a highly sensitive centralized detector that determines the presence of visible smoke or invisible combustion products. The detector can be a cloud chamber–type smoke detector or any of several varieties of high sensitivity, photoelectric-type smoke detectors. See 3.3.276.

Air sampling–type detectors are used in applications where the designer is concerned with very early smoke detection and enhanced sensitivity is needed, such as areas that house valuable equipment. They are used also in conventional settings that do not require high sensitivity, such as areas with high ceilings or environmental conditions that are unsuitable for spot-type detectors. See Exhibits 17.35 through 17.38 for examples of air sampling–type smoke detectors.

N **17.7.3.6.1 General.**

N **17.7.3.6.1.1*** In the absence of specific performance-based design criteria, each sampling port of an air sampling–type smoke detector shall be treated as a spot-type smoke detector for the purpose of location and spacing in accordance with 17.7.3.

The International Fire Detection Research Project showed that the sampling port does not produce the effect of drawing the smoke up to the sampling port from lower down in the compartment. When air sampling–type detectors are used to protect rooms and other large compartments, they rely on either ambient air currents or the fire plume and ceiling jet as much as spot-type smoke detectors.

N **A.17.7.3.6.1.1** For an air sampling–type smoke detector, the sensitivity at the detector is not equal to sensitivity at the sampling port. Sampling port sensitivity is dependent on two main factors:

(1) The number of sampling ports in the piping network
(2) The set alarm sensitivity of the detector

In the absence of performance-based criteria, the sensitivity at each sampling port of an air sampling–type smoke detector should not exceed the 4 percent ft obscuration criteria of a spot-type smoke detector.

EXHIBIT 17.35

Use of Sampling Pipes to Convey Smoke-Laden Air to Central Detection Unit of Air Sampling–Type Detector. (Source: Xtralis, Northford, CT)

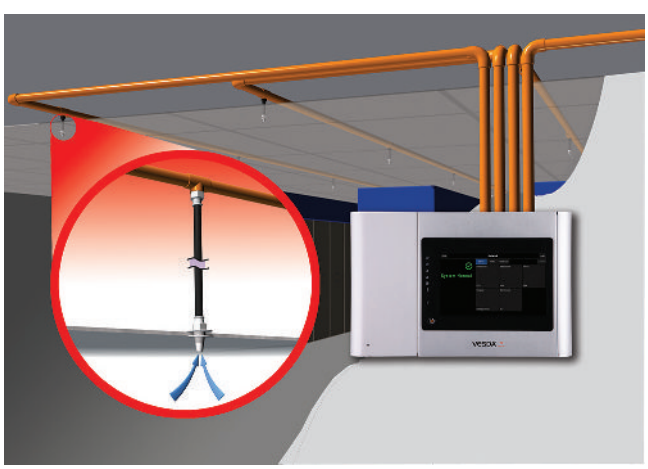

EXHIBIT 17.36

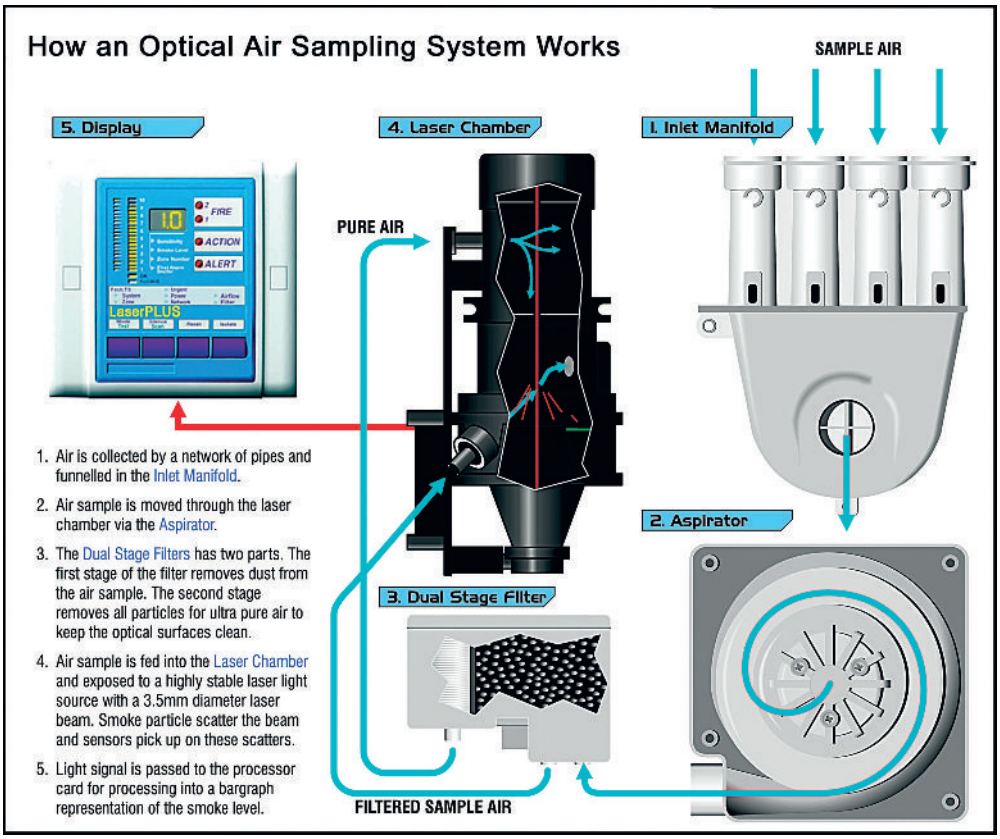

How an Optical Air Sampling System Works. (Source: Xtralis, Northford, CT)

EXHIBIT 17.37

Air Sampling–Type Smoke Detectors. (Source: Xtralis, Northford, CT)

EXHIBIT 17.38

Air Sampling–Type Smoke Detector. (Source: Carrier Corporation, Palm Beach Gardens, FL)

The benefit of the air sampling–type smoke detector is its active nature to draw air into all sampling holes simultaneously; the air is combined in the pipe and transported back to the detector for sampling.

When smoke-laden air is drawn into a single sampling port, it is mixed with clean air drawn from any additional sampling ports on the pipe network. The use of a high-sensitivity detector accounts for this diluting effect, so that an alarm is initiated when the smoke obscuration at the sampling point is equal to or greater than 4 percent per foot.

When smoke-laden air is drawn into multiple sampling ports at once, less clean air is drawn into the pipe network and the smoke particle concentration is diluted less. This increases the detection system sensitivity, so that an alarm can be initiated when the smoke obscuration at the sampling ports is less than 4 percent per foot.

As part of the system design process, the sensitivity of each sampling port must be calculated in accordance with 17.7.3.6.2.2 and 17.7.3.6.2.3.

N **17.7.3.6.1.2** Air sampling–type smoke detectors shall produce trouble signals if the airflow is outside the manufacturer's specified range.

The effectiveness of air sampling–type detectors depends on the sampling pipe network to transport smoke-laden air reliably from the protected hazard to the remote detector. Therefore, the piping network must be supervised to ensure that it remains intact and that the pipe and sampling ports remain clear and unobstructed. Dust from the protected space can cause clogging of the sampling pipes, as well as any filters in the sampling path. Both clogging and filter loading can lead to reduced airflow from the affected portions of the sampling network. Supervision is typically accomplished with a calibrated airflow meter in the detector. A trouble condition is annunciated if the airflow through the detector is outside an acceptable range that is calculated for the specific sampling pipe network in accordance with 17.7.3.6.2.2 and 17.7.3.6.2.3. A high airflow signals an open sampling pipe, and a low airflow signals an obstruction.

N **17.7.3.6.1.3** If provided, atmospheric contaminant filtration shall be listed for use with the detector and installed and maintained in accordance with the air sampling–type smoke detector manufacturer's published instructions.

In many industrial and manufacturing settings, the atmosphere contains dust, such as coal, wood, or other by-products of the manufacturing process. Conventional spot-type smoke detectors are counterproductive in these environments for two reasons. First, traditional spot detectors cannot distinguish between these particulates and products of combustion, resulting in a significant increase in nuisance alarms. Second, dust and dirt particulates can accumulate inside the spot-type smoke detector, resulting in "dirty" detector warnings or damage to the electronic components of the detectors.

Air sampling–type detectors can be more suitable for dirty environments because the detector can be outside the protected space, and the sampled air can be passed through a listed filter to remove the particulates that could damage the internal components. See Exhibit 17.36.

N **17.7.3.6.2 Pipe Network.**

N **17.7.3.6.2.1** Maximum air sample transport time from the farthest sampling port to the detector shall not exceed 120 seconds.

FAQ What effect does limiting the transport time have on the system design?

The air transport time criterion places an effective limit on the design of the fan and the maximum distance from the detector to the farthest sampling port, as well as the size and layout of the sampling pipes. The manufacturer's listing and instructions provide the details on how to comply with this limitation when using a specific product. As part of the system design process, the air transport time must be calculated in accordance with 17.7.3.6.2.2 and 17.7.3.6.2.3.

N **17.7.3.6.2.2** Sampling pipe networks shall be designed on the basis of, and shall be supported by, computer-based fluid dynamics design calculations to ensure required performance.

System Design Tip

The manufacturers of air sampling–type smoke detectors supply engineering guidelines in their installation documentation that ensure that the system is designed using fluid dynamic principles. These guidelines are evaluated by the testing laboratories as part of the listing evaluation procedure.

N **17.7.3.6.2.3** The sampling pipe network design calculations shall include pressure, volumetric flow, and alarm sensitivity at each sampling port.

The transport time is determined by flow calculations. Flow calculations determine that sufficient pressure and flow volume are available at all the sampling ports and that the air sampling–type detector will provide detection over the entire area it is to cover.

N **17.7.3.6.2.4** Software applications for the design of pipe networks shall be listed for use with the manufacturer's equipment.

Software used to design the air sampling pipe network must be evaluated by a listing agency to verify that the calculation routine predicts the system performance accurately, including air flow rate, sample transport time, and sampling port sensitivity.

N **17.7.3.6.2.5** Sampling system piping shall be conspicuously identified as "SMOKE DETECTOR SAMPLING TUBE — DO NOT DISTURB," as follows:

(1) At changes in direction or branches of piping
(2) At each side of penetrations of walls, floors, or other barriers
(3) At intervals on piping that provide visibility within the space, but no greater than 20 ft (6.1 m)

Many building systems are often installed in the above-ceiling space. If the sampling pipe network is subsequently damaged by another trade, a break in the pipe could cause the detector to sample

the above-ceiling air rather than the air beneath the ceiling plane. Piping must be marked clearly, in a manner that will endure for the lifetime of the unit, to ensure that any damage is corrected as quickly as possible.

N **17.7.3.6.2.6*** Sampling ports shall be identified as such.

N **A.17.7.3.6.2.6** Identification can include means such as marking or use of a configuration management program that identifies locations.

N **17.7.3.6.2.7*** If provided, test ports at the end (most remote location) of a pipe run installed in the pipe network solely for the purpose of validating consistency in performance (also referred to as benchmark test points) shall be included in the design calculations and allowed, but not required, to comply with the requirements of 17.7.3.6.2.

N **A.17.7.3.6.2.7** A benchmark test point should be provided at the furthest end of each pipe run, opposite the end of the air sampling–type smoke detector apparatus. This remote test point is intended to benchmark system performance at the time of initial commissioning and during routine test and inspection. The test point should be labeled to document benchmark system performance at the time of commissioning, using manufacturer-supplied labels intended for this purpose. Benchmark labels should be placed just above test points and be positioned so that they are visible without obstruction.

Sampling ports should be tested during the commissioning process to establish a baseline to be used during subsequent testing. For the annual or routine maintenance testing, only a few sampling ports may be tested and the results compared to the original transport times. Typically, the sampling ports farthest from the detector unit are tested. If the transport times remain close to the initial results, the system is operating as designed and no further testing is required. If there is a difference of more than 5 percent from the transport times predicted by the design software, the piping network, hole sizes, or the detector settings should be checked to determine the causes of the difference. Deviations should be addressed and corrected immediately.

N **17.7.3.6.2.8** If the piping and fittings are painted, the painting shall be performed in accordance with the air sampling–type smoke detector manufacturer's published instructions.

N **17.7.3.6.2.9*** Pipe network materials, sizing, and installation shall be in accordance with the manufacturer's published requirements and suitable for use in the environment in which they are installed.

N **A.17.7.3.6.2.9** Where installed in areas having environmental conditions such as high temperature or humidity, radiation or corrosive atmospheres, all pipe network materials should be suitable for the specific environmental conditions anticipated.

Although Article 760 of *NFPA 70* has detailed criteria for detection system wiring, no national consensus standards are published for sampling pipe installation. Each manufacturer makes its own recommendations that establish the minimum compliance criteria for that product. The integrity of the sampling pipe network is just as important to the air sampling–type detector as the integrity of the system wiring. The installation methods used for air-sampling piping should provide equivalent security and mechanical protection.

N **17.7.3.6.2.10** Where used, capillary tubing shall be sized and affixed in accordance with the manufacturer's published instructions and computer-based design calculations.

N **17.7.3.6.3 Installation and Spacing.**

17.7.3.6.3.1* Air sampling pipe network fittings shall be installed air-tight and permanently affixed.

N **A.17.7.3.6.3.1** Where the pipe network connects to the detector, refer to the manufacturer's published instructions for implementation of this connection.

•
N **17.7.3.6.3.2** Sampled air shall be exhausted to a lessor or equal pressure zone. The pressure differential between the sampled air and detector exhaust shall not exceed the manufacturer's published instructions.

The design calculation software for an air sampling detection system assumes that the air pressure in the protected space is the same as the air pressure in the area where the sampled air is exhausted. The sampling hole size, pipe size, transport time, and the fan aspirator speed are all functions of the air volume that passes through the sensing chamber, which is designed to detect smoke particles moving at a specific rate. If the pressure at the sampling ports is greater than at the exhaust port, the velocity of the sampled air entering the chamber is likely to be higher than the design rate, which could negatively impact the detector's ability to sense smoke particles. Conversely, if the pressure at the sampling ports is less than at the exhaust port, the reverse pressure bias might cause the fan to rotate slower than designed, resulting in increased transport times and decreased air flow into the sensing chamber.

Because pressure gradients are not often a concern, most air sampling detection systems are designed to exhaust directly from the detector. However, if a pressure gradient exists between the sampling location and the detector location, an exhaust pipe can be used to return the exhausted air to the room of origin.

N **17.7.3.6.3.3*** Supports for sampling pipe shall be in accordance with the air sampling–type smoke detector manufacturer's published instructions.

N **A.17.7.3.6.3.3** Care should be exercised when attaching clamps to ensure that the pipe is not damaged and to allow for expansion and contraction of the pipe.

N **17.7.3.6.4 Special Applications.**

N **17.7.3.6.4.1 Air Duct Applications.**

N **(A)** The air sampling system shall be listed for air duct applications and shall be installed in accordance with the manufacturer's published instructions.

N **(B)** The inlet and exhaust sections of pipe that are installed inside the air duct shall be air-tight and shall exhaust the sampled air in accordance with the manufacturer's published instructions.

N **17.7.3.6.4.2* Electrical Cabinet Applications.** For protection of cabinets containing electrical equipment, the air sampling ports shall be located in the main airflow at the exhaust vents, downstream of the airflow distribution path, or in accordance with the manufacturer's published instructions.

N **A.17.7.3.6.4.2** Electrical equipment cabinets are commonly ventilated vertically (bottom to top passive cooling) or horizontally (front to back passive cooling) or are fully enclosed with active internal cooling. For passively cooled applications, the sampling pipe can be located external to the cabinet with sampling ports directly in the main airflow of the exhaust vents or in the cabinet with the sampling port(s) located within 1 in. to 2 in. (25 mm to 50 mm) of the cabinet top. For fully enclosed cabinets, the sampling port is located in the cabinet within 1 in. to 2 in. (25 mm to 50 mm) from the cabinet top. In either case, the manufacturer's published installation instructions should be followed.

• **17.7.3.7* Projected Beam–Type Smoke Detectors.**

A.17.7.3.7 On smooth ceilings, a spacing of not more than 60 ft (18.3 m) between projected beams and not more than one-half that spacing between a projected beam and a sidewall (wall parallel to the beam travel) should be used as a guide. Other spacing should be determined based on ceiling height, airflow characteristics, and response requirements.

In some cases, the light beam projector is mounted on one end wall, with the light beam receiver mounted on the opposite wall. However, it is also permitted to suspend the projector and receiver from the ceiling at a distance from the end walls not exceeding one-quarter the selected spacing (*S*). *(See Figure A.17.7.3.7.)*

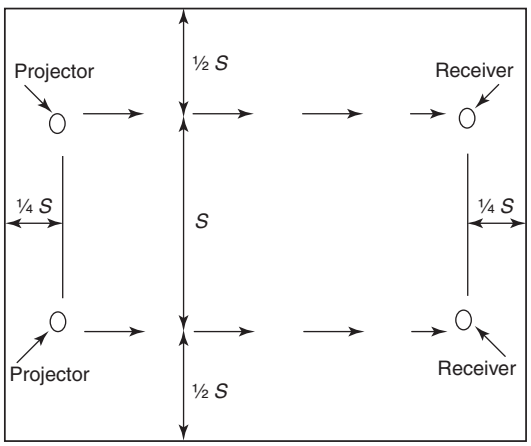

S = Selected detector spacing

FIGURE A.17.7.3.7 *Maximum Distance at Which Ceiling-Suspended Light Projector and Receiver Can Be Positioned from End Wall Is One-Quarter Selected Spacing (S).*

17.7.3.7.1 Projected beam–type smoke detectors shall be located in accordance with the manufacturer's published instructions.

System Design Tip

Each make and model of a linear projected beam–type smoke detector has specific installation limitations as well as performance capabilities. Most notable of these limitations are the minimum and the maximum beam lengths. The designer should make certain that the contemplated installation is consistent with the criteria established in the published installation instructions of the product selected. The spacing criteria provided in Figure A.17.7.3.7 is only a general example — the actual spacing requirements will be dependent on the technology of the beam detector and the performance standards applied by the listing authority.

17.7.3.7.2 The effects of stratification shall be evaluated when locating the detectors.

As with other types of smoke detection, the location selected for detectors must account for the effects of stratification. In high-ceiling areas where stratification is a concern, detectors can be positioned at several levels. Alternatively, the methods in Annex B can be used to calculate the plume divergence at the detector mounting height. The plume width at the detector mounting height can then be used as the "spacing" between adjacent beams in a performance-based design.

17.7.3.7.3 The beam length shall not exceed the maximum permitted by the equipment listing.

FAQ Why is the observance of the manufacturer's beam length limitations important?

Linear projected beam–type smoke detectors have limitations on both the minimum and the maximum beam lengths over which they will operate properly. The minimum beam length limitation is established by the lowest smoke concentration that can be detected at that minimum beam length. The maximum beam length is determined by the maximum distance at which the detector can maintain its design stability even when some normal light obscuration is present. The projected beam–type smoke detector must be able to identify a low concentration of smoke distributed along a substantial portion of the beam and a high concentration of smoke localized in a short segment of the beam. Each manufacturer obtains a listing from a qualified testing laboratory that sets the upper and lower limits on the beam length. Failure to observe these limits could result in an unstable detector or the failure to detect a fire consistent with the performance objectives.

17.7.3.7.4 If mirrors are used with projected beams, the mirrors shall be installed in accordance with the manufacturer's published instructions.

Mirrors used with linear projected beam–type smoke detectors must also be listed for use with the detector.

17.7.3.7.5 A projected beam–type smoke detector shall be considered equivalent to a row of spot-type smoke detectors for level and sloping ceiling applications.

Given the similarities between the installation and spacing concepts developed for line-type heat detectors and projected beam–type smoke detectors, the logic behind the design requirements remains consistent. When spacing strategies are developed, a linear projected beam–type detector can be thought of as equivalent to a row of spot-type smoke detectors, similar to how a line-type heat detector can be considered a row of spot-type heat detectors. The distance between the linear projected beams is analogous to the distance between rows of spot-type smoke detectors.

17.7.3.7.6 Projected beam–type detectors and mirrors shall be mounted on stable surfaces to prevent false or erratic operation due to movement.

17.7.3.7.7 The beam shall be designed so that small angular movements of the light source or receiver do not prevent operation due to smoke and do not cause nuisance or unintentional alarms.

Buildings move under normal, everyday conditions. Wind or uneven thermal expansion can cause buildings to sway, the ebb and flow of the tides can cause oceanfront buildings to flex, and nearby street traffic can cause portions of buildings to vibrate. Modern curtain wall/steel frame buildings are designed to flex. This movement, however, places a demand on fire alarm systems, especially fire alarm systems using projected beam–type smoke detectors. The detectors must be able to accommodate the natural or designed movement of the building. The manufacturers of projected beam–type detectors provide installation instructions that address the potential for this type of difficulty. Because of the physical instability of mounting surfaces and building movement, some manufacturers do not allow the use of mirrors. The diameter of the projected beam and the receiver in relation to the expected flexure of the building can be a limiting factor on beam length.

17.7.3.7.8* The light path of projected beam–type detectors shall be kept clear of opaque obstacles at all times.

A.17.7.3.7.8 Where the light path of a projected beam–type detector is abruptly interrupted or obscured, the unit should not initiate an alarm. It should give a trouble signal after verification of blockage.

Projected beam–type detectors use obscuration algorithms in their software that can distinguish the progressive obscuration that occurs during a fire with the step-wise obscuration that usually indicates interference in the path of the beam by an opaque object. However, in spite of the most sophisticated software, seasonal decorations, party balloons, and hanging plants have been known to cause problems. Obstructions that can gradually grow and block a beam detector, such as trees in an atrium, should also be considered a potential problem.

17.7.4 Heating, Ventilating, and Air-Conditioning (HVAC).

17.7.4.1* In spaces served by air-handling systems, detectors shall not be located where airflow prevents operation of the detectors.

A.17.7.4.1 Detectors should not be located in a direct airflow or closer than 36 in. (910 mm) from an air supply diffuser or return air opening. Supply or return sources larger than those commonly found in residential and small commercial establishments can require greater clearance to smoke detectors. Similarly, smoke detectors should be located farther away from high velocity air supplies. See B.4.10.

System Design Tip

This paragraph applies to both air supply and air return. In research conducted under the International Fire Detection Research Project, computer modeling identified situations where areas of nonactuation extended almost 11 ft (3.4 m) from some supply diffusers. In addition, the research showed that a smoke dilution effect occurred near air returns. An air return pulls air up from levels in the room that are beneath the ceiling jet, which has the effect of diluting smoke concentration near the air return grille. The designer should arrange the detection so that detectors are not adjacent to either air supplies or air returns.

Situations could exist where even a 36 in. (910 mm) separation is not adequate. This situation could depend on the air velocity (supply air and return air), the throw characteristics of the supply diffuser, and the diffuser size. Because the research did not address wide variations in HVAC flow rates, the minimum distance between a detector and the HVAC system supply or return recommended in A.17.7.4.1 might not be valid in all cases. Where in doubt, airflow in the vicinity of the detector should be mapped with a velometer or anemometer. Certainly, the ambient airflow at the detector location should be only a fraction of that used in the ANSI/UL 268 smoke box of 30 ft/min (0.152 m/sec).

Δ **17.7.4.2** In under-floor spaces and above-ceiling spaces that are used as HVAC plenums, detectors shall be listed for the anticipated environment as required by 17.7.1.8.

System Design Tip

HVAC systems distribute frigid or hot air to maintain a specific temperature in a conditioned space. Consequently, HVAC plenums can have ambient conditions that are far more extreme than the spaces they support.

Smoke detectors are electronic sensors. Ambient temperature, relative humidity, and, especially in the case of spot-type ionization detectors, the velocity of the air around the detector all affect detector operation. Not all smoke detectors are listed for the range of conditions in HVAC plenums or in under-floor or above-ceiling spaces. The designer's responsibility is to verify that the detector is listed for use in the range of environmental conditions that will be encountered where it is to be installed. See also 17.7.1.8 and A.17.7.1.8.

N **17.7.4.3** Detector spacings and locations shall be selected on the basis of anticipated airflow patterns and fire type.

Δ **17.7.4.4*** Detectors placed in environmental air ducts or plenums shall not be used as a substitute for open area detectors.

In most buildings, there are periods when the HVAC system is not moving significant quantities of air from the compartments it serves. As a result, the fire detection system cannot be designed to rely on the HVAC system operation for the transport of smoke to detectors in the duct or plenum.

A.17.7.4.4 Smoke might not be drawn into the duct or plenums when the ventilating system is shut down. Furthermore, when the ventilating system is operating, the detector(s) can be less responsive to a fire condition in the room of fire origin due to dilution by clean air.

N **17.7.4.4.1** Where detectors are used for the control of smoke spread, the requirements of 17.7.5 shall apply.

N **17.7.4.4.2** Where open area protection is required, 17.7.3 shall apply.

17.7.4.5 Detectors placed in environmental air ducts or plenums shall be permitted to be either supervisory or alarm initiating devices.

17.7.5* Smoke Detectors for Control of Smoke Spread.

A.17.7.5 Refer to NFPA *101* for the definition of smoke compartment; NFPA 90A for the definition of duct systems; and NFPA 92, for the definition of smoke zone.

Between 1960 and 1971, fires in several high-rise buildings demonstrated the difficulty of trying to evacuate an entire building. Not only did occupants incur injuries during the evacuation, the means of egress often became untenable due to heavy smoke concentrations. Improved building codes resulted in structures that could maintain their integrity in spite of the complete combustion of the interior fire load through passive fire-resistive construction and compartmentation, and defending occupants in place became a viable option. Strategies were developed for establishing smoke compartments and areas of refuge and for managing the flow of smoke by directing it away from the occupants. Experiences with high-rise fires indicate that proactive control of smoke with either automatic smoke detectors and HVAC systems or engineered smoke control systems is a viable strategy for occupant protection in high-rise buildings.

FAQ Does 17.7.5 require the installation of smoke detectors for smoke control?

Subsection 17.7.5 does not require the installation of smoke detectors for smoke control. The purpose of 17.7.5 is to describe the performance and installation requirements for smoke detectors being used for smoke control, if they are required by some other code or standard.

17.7.5.1* Classifications. Smoke detectors installed and used to prevent smoke spread by initiating control of fans, dampers, doors, and other equipment shall be classified in the following manner:

(1) Area detectors that are installed in the related smoke compartments
(2) Detectors that are installed in the air duct systems
(3) Video image smoke detection that is installed in related smoke compartments

Either dedicated detectors installed in the HVAC system or area detectors can be used to control smoke spread. With addressable/analog detection technology, individual ceiling-mounted spot-type detectors produce discrete alarm signal codes that are logged by the FACU. Both projected beam smoke detectors and video image smoke detectors are also used as area detection and can be used as an input signal for the control of the HVAC system serving the related smoke compartments.

A.17.7.5.1 Smoke detectors located in an open area(s) should be used rather than duct-type detectors because of the dilution effect in air ducts. Active smoke management systems installed in accordance with NFPA 92 should be controlled by total coverage open area detection.

17.7.5.2* Limitations.

A.17.7.5.2 Dilution of smoke-laden air by clean air from other parts of the building or dilution by outside air intakes can allow high densities of smoke in a single room with no appreciable smoke in the air duct at the detector location. Smoke might not be drawn from open areas if air-conditioning systems or ventilating systems are shut down.

17.7.5.2.1 Detectors that are installed in the air duct system in accordance with 17.7.5.1(2) shall not be used as a substitute for open area protection.

The use of duct-type smoke detectors to provide open area protection does not address the potential for a fire during instances when the HVAC system is not running, nor does it address the delay in detection due to smoke dilution. The use of duct smoke detection in lieu of open area protection is prohibited.

17.7.5.2.2 Where open area protection is required, 17.7.3 shall apply.

17.7.5.3* Purposes.

A.17.7.5.3 Smoke detectors can be applied in order to initiate control of smoke spread for the following purposes:

(1) Prevention of the recirculation of dangerous quantities of smoke within a building
(2) Selective operation of equipment to exhaust smoke from a building
(3) Selective operation of equipment to pressurize smoke compartments
(4) Operation of doors and dampers to close the openings in smoke compartments

17.7.5.3.1 To prevent the recirculation of dangerous quantities of smoke, a detector approved for air duct use shall be installed on the supply side of air-handling systems as required by NFPA 90A and 17.7.5.4.2.1.

17.7.5.3.2 If smoke detectors are used to initiate selectively the operation of equipment to control smoke spread, the requirements of 17.7.5.4.2.2 shall apply.

17.7.5.3.3 If detectors are used to initiate the operation of smoke doors, the requirements of 17.7.5.6 shall apply.

17.7.5.3.4 If duct detectors are used to initiate the operation of smoke dampers within ducts, the requirements of 17.7.5.5 shall apply.

17.7.5.4 Application.

17.7.5.4.1 Area Smoke Detectors Within Smoke Compartments. Area smoke detectors within smoke compartments shall be permitted to be used to control the spread of smoke by initiating operation of doors, dampers, and other equipment.

Area detectors are permitted to provide signals to initiate the control of the spread of smoke. Addressable/analog detectors, whose principal function is area protection, can be used effectively to provide these signals. Existing detectors can perform double duty through the programming of the FACU. Where area smoke detectors are used, they should be located where they can identify the presence of smoke or the movement of smoke past a particular area. The locations for area smoke detectors are a function of building geometry, anticipated fire locations, and intended goals of smoke control functions.

FAQ Is complete area smoke protection always required?

Except where used as permitted in 17.7.5.4.2.2(B), complete area smoke protection is not necessary to provide for such control features. Specific locations are often identified for specific fire scenarios. For example, smoke detectors are often placed at the perimeter of an atrium to detect smoke movement into the atrium space from a corridor that opens into the atrium. Another example is the use of smoke detectors to release smoke doors only as their associated smoke detector is actuated, thus avoiding premature release of all other doors. Selective door release is sometimes chosen to prevent the premature release of doors needed to facilitate rapid evacuation.

Complete area coverage may be used for the control of smoke spread. In this case, when a compartment detector actuates in the smoke compartment, it signals the FACU, which, in turn, signals the HVAC control system or smoke door release system. The HVAC controller operates or controls fans and dampers to prevent the introduction of smoke into other smoke compartments and to vent the smoke from the fire compartment, facilitating occupant egress. The smoke door release system closes either all doors in the building or all doors in the smoke zone.

17.7.5.4.2* Smoke Detection for Air Duct System.

A.17.7.5.4.2 Smoke detectors are designed to sense the presence of particles of combustion, but depending on the sensing technology and other design factors, different detectors respond to different types of particles. Detectors based on ionization detection technology are most responsive to smaller, invisible sub-micron sized particles. Detectors based on photoelectric technology, by contrast, are most responsive to larger visible particles.

It is generally accepted that particle size distribution varies from sub-micron diameter particles predominant in the proximity of the flame of a flaming fire to particles one or more orders of magnitude larger, which are characteristic of smoke from a smoldering fire. The actual particle size distribution depends on a host of other variables including the fuel and its physical make-up, the availability of oxygen including air supply and fire–gas discharge, and other ambient conditions, especially humidity. Moreover, the particle size distribution is not constant, but as the fire gases cool, the sub-micron particles agglomerate and the very large ones precipitate. In other words, as smoke travels away from the fire source, the particle size distribution shows a relative decrease in smaller particles. Water vapor, which is abundantly present in most fires, when cooled sufficiently will condense to form fog particles — an effect frequently seen above tall chimneys. Because water condensation is basically clear in color, when it is mixed with other smoke particles, it can be expected to lighten the color of the mixture.

In almost every fire scenario in an air-handling system, the point of detection will be some distance from the fire source; therefore, the smoke will be cooler and more visible because of the growth of sub-micron particles into larger particles due to agglomeration and recombination. For these reasons, photoelectric detection technology has advantages over ionization detection technology in air duct system applications.

17.7.5.4.2.1 Supply Air System.

N **(A)** Where the detection of smoke in the supply air system is required by other NFPA standards, a detector(s) listed for the air velocity present shall be installed in the supply air duct downstream of both the fan and the filters.

N **(B)** Where the air duct system passes through other smoke compartments not served by the duct, additional smoke detectors shall not be required to be installed.

The relevant NFPA standards are NFPA 90A; NFPA 92, *Standard for Smoke Control Systems*; and NFPA *101*. The purpose of supply-side smoke detection is the sensing of smoke that might be contaminating

the area served by the duct but not as a result of a fire in that area. The smoke might be coming from another area via return air ducts, from outside via fresh air mixing ducts, or from a fire in the duct (such as in a filter or fan belt). If the source of the smoke is from outside or from in the duct, a fire alarm response for area detection in the space would not normally be expected to produce the most appropriate set of responses.

Different airflow management programs are required for supply-side smoke inflow as opposed to smoke generated in the compartment. Furthermore, compartment area detection cannot be relied on to respond to a supply duct smoke inflow because of the expected dilution of smoke-laden air with fresh air as it enters the smoke compartment where the area detection is installed. This expected condition necessitates the use of detectors downstream of the fan and filters in the supply air duct.

The exception is based on the fire resistance of HVAC ducts and the unlikelihood of smoke escaping from the HVAC duct into a compartment not served by the duct. Refer to the following excerpt from NFPA 90A for supply and return air smoke detection requirements.

NFPA 90A (2018)

6.4.2* Location.

6.4.2.1 Smoke detectors listed for use in air distribution systems shall be located as follows:

(1) Downstream of the air filters and ahead of any branch connections in air supply systems having a capacity greater than 944 L/sec (2000 ft^3/min)

(2) At each story prior to the connection to a common return and prior to any recirculation or fresh air inlet connection in air return systems having a capacity greater than 7080 L/sec (15,000 ft^3/min) and serving more than one story

6.4.2.2 Return system smoke detectors shall not be required where the entire space served by the air distribution system is protected by a system of area smoke detectors.

6.4.2.3 Smoke detectors shall not be required for fan units whose sole function is to remove air from the inside of the building to the outside of the building.

17.7.5.4.2.2* Return Air System. Unless otherwise modified by 17.7.5.4.2.2(A) or 17.7.5.4.2.2(B), if the detection of smoke in the return air system is required by other NFPA standards, a detector(s) listed for the air velocity present shall be located where the air leaves each smoke compartment, or in the duct system before the air enters the return air system common to more than one smoke compartment.

The objective of HVAC system return detection is to prevent the recirculation of smoke-laden air to other, smoke-free portions of the building via the HVAC system. While use of complete area detection is preferable because it provides the earliest possible response, the use of return duct detection is permitted and most often used.

(A) Additional smoke detectors shall not be required to be installed in ducts where the air duct system passes through other smoke compartments not served by the duct.

This is based on the fire resistance of HVAC ducts and the unlikelihood of smoke escaping from the HVAC duct into a compartment not served by the duct. With reference to Figure A.17.7.5.4.2.2(c), the top duct does not need additional detectors and/or dampers where it passes through either the center compartment or the right compartment.

(B) Where total coverage smoke detection is installed in accordance with 17.5.3.1 in all areas of the smoke compartment served by the return air system, installation of additional detector(s) listed for the air velocity present where the air leaves each smoke compartment, or in the duct system before the air enters in the return air system shall not be required, provided that their function is accomplished by the design of the total coverage smoke detection system.

The context for the requirements in 17.7.5.4.2.2 are spaces physically defined as smoke compartments with supply and return air systems and associated smoke detectors that are used to operate doors, dampers, or other equipment to control the spread of smoke. It is permitted to omit the return air duct smoke detector when *total coverage* is installed. Exhibits 17.39 and 17.40 illustrate the scenarios of how this applies.

First, in Exhibit 17.39, a total coverage scenario (Scenario 5) that includes a ducted return air system is shown without any smoke detection in the duct. The second example, Exhibit 17.40, is a total coverage scenario (Scenario 6) that includes a return air plenum system — again, without any smoke detection in the air return duct. In both scenarios, the space below the ceiling is provided with smoke detection and the concealed space must be evaluated according to the requirements of 17.5.3.1 to determine the extent smoke detectors are needed to qualify either scenario as having total coverage. There is no requirement for a smoke detector in the return air duct system with the proper complement of smoke detectors installed to satisfy the definition of total coverage, provided the total coverage smoke detectors serve to close doors, dampers, and so on, as required by 17.7.5.4.2.2(B).

Scenarios 1 through 4 are discussed earlier in this chapter, in the commentary following 17.5.3.1.5.

A.17.7.5.4.2.2 Detectors listed for the air velocity present can be permitted to be installed at the opening where the return air enters the common return air system. The detectors should be installed up to 12 in. (300 mm) in front of or behind the opening and spaced according to the following opening dimensions *[see Figure A.17.7.5.4.2.2(a) through Figure A.17.7.5.4.2.2(c)]*:

EXHIBIT 17.39

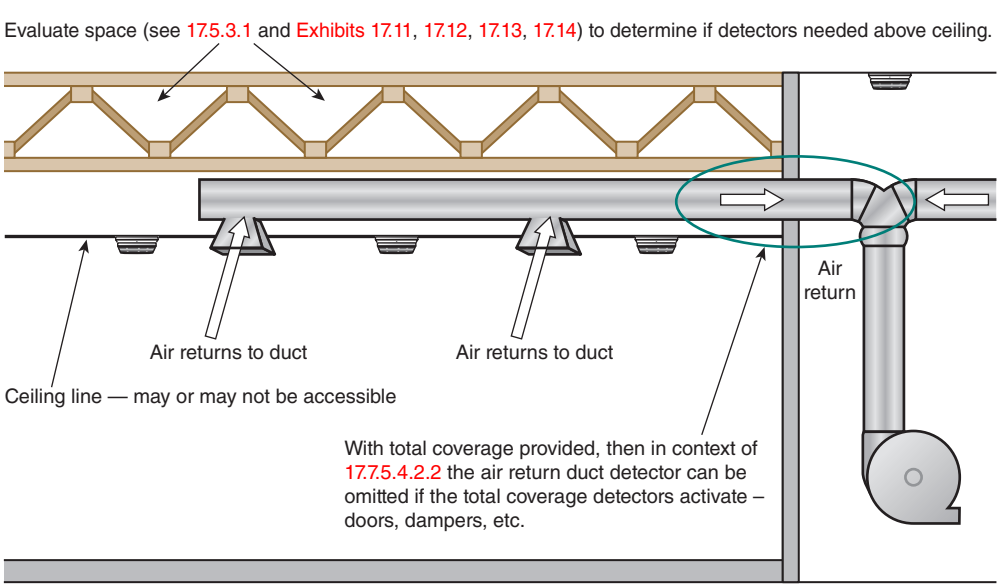

Total Coverage — Scenario 5. (Source: JENSEN HUGHES, Lincolnshire, IL)

EXHIBIT 17.40

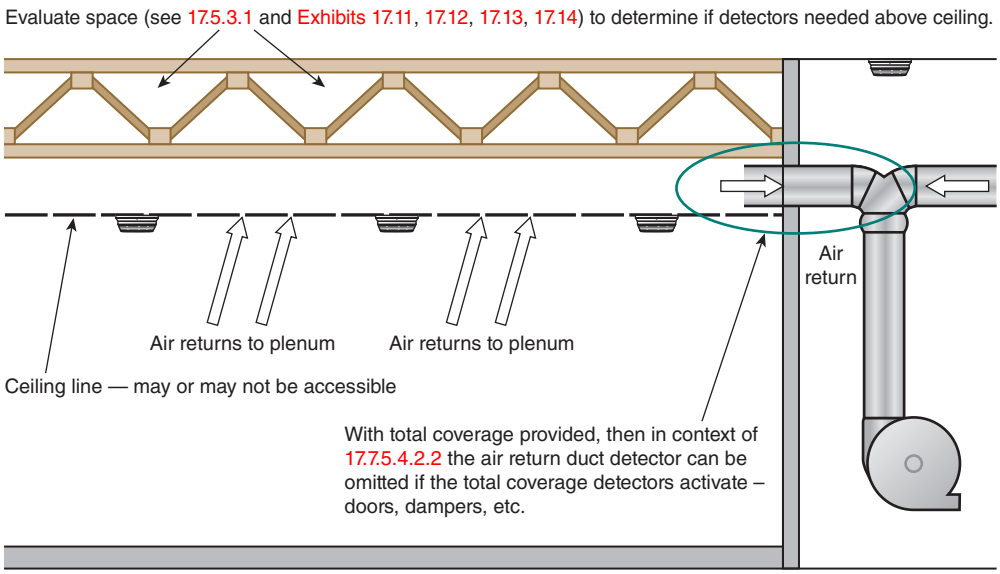

Total Coverage — Scenario 6. (Source: JENSEN HUGHES, Lincolnshire, IL)

(1) *Width.*
   (a) Up to 36 in. (910 mm) — One detector centered in opening
   (b) Up to 72 in. (1.83 m) — Two detectors located at the one-quarter points of the opening
   (c) Over 72 in. (1.83 m) — One additional detector for each full 24 in. (610 mm) of opening

(2) *Depth.* The number and spacing of the detector(s) in the depth (vertical) of the opening should be the same as those given for the width (horizontal) in A.17.7.5.4.2.2(1).

(3) *Orientation.* Detectors should be oriented in the most favorable position for smoke entry with respect to the direction of airflow. The path of a projected beam–type detector across the return air openings should be considered equivalent in coverage to a row of individual detectors.

Additional duct smoke detection is not required where the air leaves each smoke compartment or in the duct system before the air enters the return air system in the return air of a smoke compartment provided with total (complete) smoke detection compliant with 17.5.3 because the addition of duct smoke detection would essentially not add any substantial detection benefit.

FAQ Where must detectors be installed if duct detection is used in return air applications?

If duct detection is used for control of smoke spread, detectors must be installed only where the return air duct leaves the smoke compartment or before the duct joins a return air plenum serving more than one smoke compartment. These locations are intended to minimize the effects of smoke dilution.

The detector location criteria outlined in A.17.7.5.4.2.2 are intended to get a sample of the air flowing in the system. The HVAC system return will draw air from a portion of the room volume based on its location. Ceiling returns pull fresh air up from lower elevations in the room, through the ceiling jet,

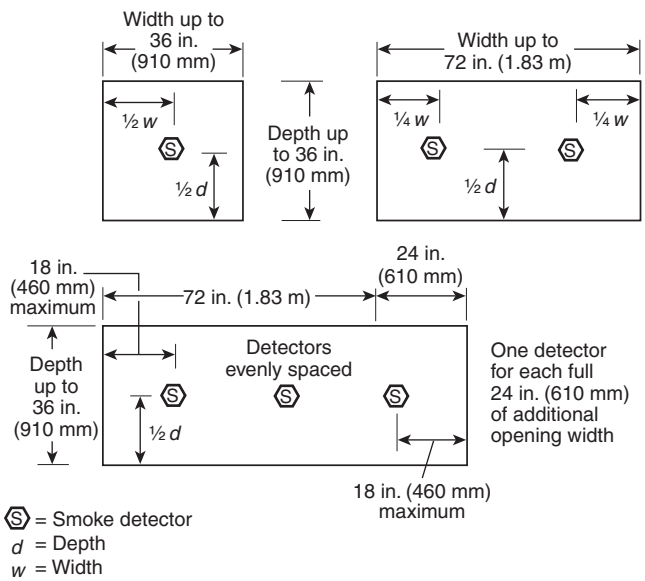

FIGURE A.17.7.5.4.2.2(a) *Location of Smoke Detector(s) in Return Air System Openings for Selective Operation of Equipment.*

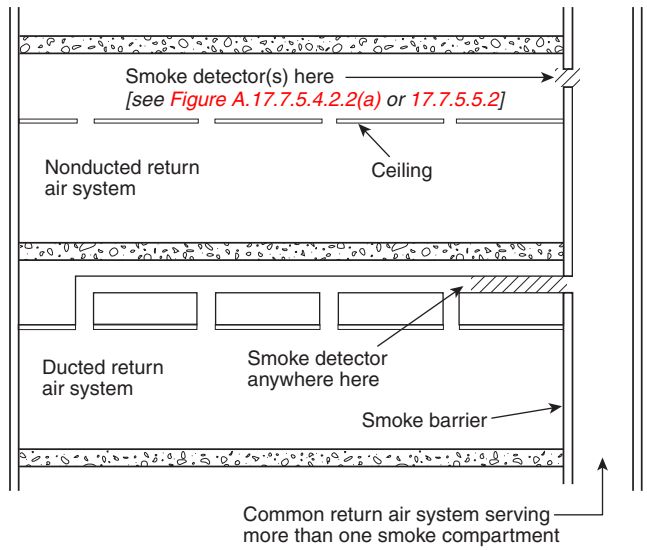

FIGURE A.17.7.5.4.2.2(b) *Location of Smoke Detector(s) in Return Air Systems for Selective Operation of Equipment.*

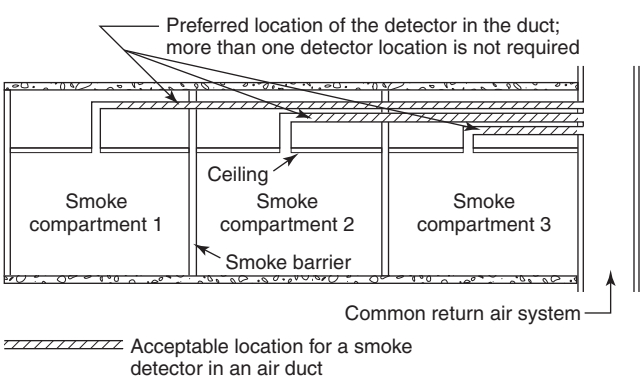

FIGURE A.17.7.5.4.2.2(c) *Detector Location in Duct that Passes Through Smoke Compartments Not Served by Duct.*

diluting the smoke. Because wall-mounted returns also tend to draw in air from a range of elevations in the room, which reduces the relative smoke concentration, dilution is usually present and usually delays response. Dilution is one of the reasons that duct-type smoke detection will be slower than spot detection in the area of the fire.

17.7.5.5 Location and Installation of Detectors in Air Duct Systems.

Sampling tubes provide a flow of air through the detector enclosure due to a pressure differential that results from the flow of air across the tubes. Orientation and installation of the sampling tubes can reduce the pressure differential, rendering them ineffective in drawing air into the detector enclosure, especially at low air velocities in variable air volume (VAV) HVAC systems.

For sampling tubes to take a representative sample of the air passing through the duct, they must be fabricated and installed in a manner consistent with their listing. The pressure differential between the inflow and outflow tubes is usually measured with either a manometer or pressure gauges. If the flow of air through the sampling tube and the detector enclosure assembly cannot be verified, as required by 17.7.5.5.2, there is no basis to presume that the air in the duct is being sampled by the detector. The pressure differential should be measured at the lowest air velocity anticipated for the duct where the detector is in a VAV HVAC system.

Duct-type smoke detectors usually consist of a standard production smoke detector and a specially designed enclosure equipped with a smoke detector mounting base and sampling tube fittings already installed. However, not all detectors are listed for use in a duct smoke detector enclosure that uses sampling tubes. It is important that the detector be listed for use in the duct smoke detector housing as an assembly.

17.7.5.5.1 Detectors shall be listed for the purpose for which they are being used.

Not all smoke detectors are suitable for use as duct detectors. The manufacturer's listing should identify whether a detector can be used in a duct. See also 17.7.5.5.7.

Δ **17.7.5.5.2*** Air duct detectors shall be installed in such a way as to obtain a representative sample of the airstream.

A.17.7.5.5.2 Where duct detectors are used to initiate the operation of smoke dampers, they should be located so that the detector is between the last inlet or outlet upstream of the damper and the first inlet or outlet downstream of the damper.

In order to obtain a representative sample, stratification and dead air space should be avoided. Such conditions could be caused by return duct openings, sharp turns, or connections, as well as by long, uninterrupted straight runs.

In return air systems, the requirements of 17.7.5.4.2.2 take precedence over these considerations. *[See Figure A.17.7.5.5.2(a) and Figure A.17.7.5.5.2(b).]*

Usually, it is necessary to manage smoke flow in buildings. Duct smoke detectors are used to shut down HVAC systems or initiate smoke management.

Filters have a serious effect on the performance of duct smoke detectors. The location of the detector relative to the filter and the source of smoke must be considered during the design process. Where smoke detectors are installed downstream from filters, they should be deemed to serve the purpose of providing an alarm indication of the occurrence of a fire in the HVAC unit (filters, belts, heat exchangers, etc.). These detectors usually serve the purpose of protecting building occupants from the smoke produced by an HVAC unit fire, or smoke ingress via the fresh air intake for the unit. They cannot be expected to serve the purpose of providing detection for the return side of the system.

Where return side detection is required, that requirement should be fulfilled with separate detectors from those monitoring the supply side. In order to be effective, return air duct smoke detectors should be located such that there are no filters between them and the source of the smoke.

Sampling tubes should be oriented to overcome thermal stratification due to buoyancy of the smoke in the upper half of the duct. This condition occurs where duct velocities are low, buoyancy exceeds flow inertia, or the detector is installed close to the fire compartment. A vertical orientation of sampling tubes overcomes the effects of differential buoyancy.

Where a detector is installed on a duct serving a single fire compartment, where the buoyancy exceeds the flow inertia of the air in the duct and the sampling tube cannot be oriented vertically, then the effects of thermal stratification can be minimized by locating the detector sampling tube in the upper half of the duct.

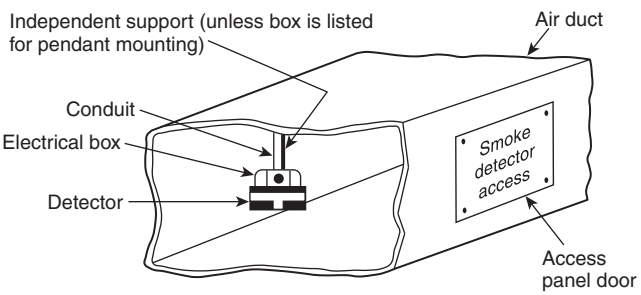

FIGURE A.17.7.5.5.2(a) *Pendant-Mounted Air Duct Installation.*

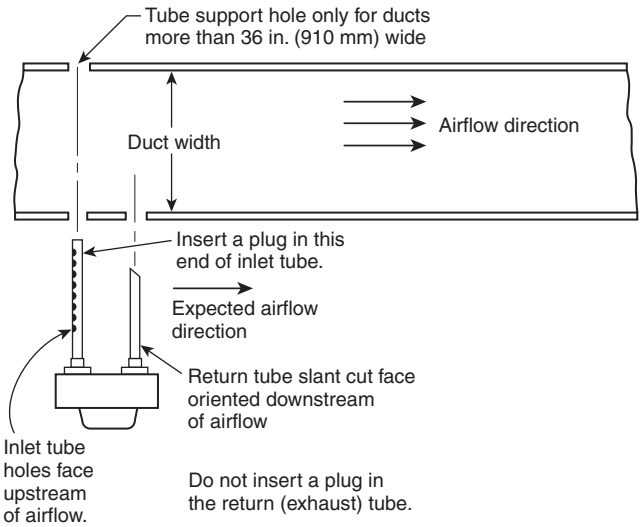

FIGURE A.17.7.5.5.2(b) *Inlet Tube Orientation.*

The thermal stratification is not a concern where the detector is installed far from the fire compartment or where the smoke is at or close to the average temperature in the duct.

The requirements in 17.7.5.5.2 and 17.7.5.5.3 and the guidance in A.17.7.5.5.2 are provided to ensure that the detectors in the air duct are suitably located to obtain an adequate sampling of air. These location guidelines should be followed to maximize the probability that smoke will be distributed evenly throughout the duct cross section at the detector location.

The airflow through a duct is not necessarily uniform. Bends and changes in cross-sectional areas and cross-sectional shapes of the duct produce regions of reduced flow velocity and reduced flow volume. Differing temperatures can also divide the flow in a duct into layers, resulting in smoke being concentrated in a portion of the duct cross section and not uniformly dispersed across the duct area.

FAQ Should detectors be located at a bend or change in dimension?

Exhibit 17.41 illustrates how sharp turns in a duct can result in turbulent and less turbulent areas of airflow. These changes in the airflow can cause nonuniform smoke concentrations and affect the proper operation of the smoke detector. The straight section of the ductwork provides the best location to avoid turbulent conditions and intercept uniform smoke concentrations. Before the 2007 edition of the Code, it was recommended that duct detector sampling tubes be located at least 6 to 10 duct diameters downstream of a bend or change in dimension. Research discovered that these recommendations were unnecessary.

FAQ According to the research, what orientation has been shown to improve detector performance?

In most cases detector performance would be improved by mounting sampling tubes vertically rather than horizontally. Vertical orientation provides effective sampling when thermal stratification in the duct causes variations in smoke concentration. However, the validity of this generalization is less reliable when ducts are encountered that are much wider than they are tall in cross section.

EXHIBIT 17.41

Typical Airflow in an Air Duct at a Bend or Obstruction.

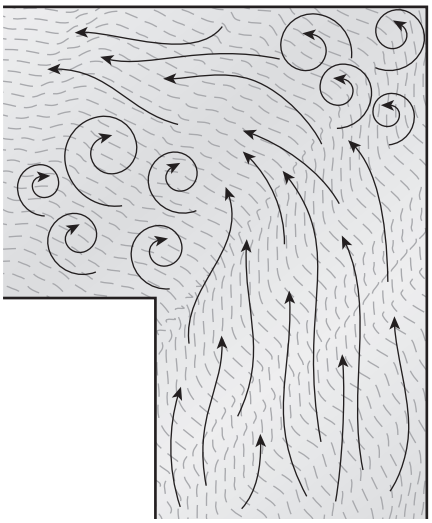

N **17.7.5.5.3** This installation shall be permitted to be achieved by any of the following methods:

(1) Rigid mounting within the duct

Support of the detector by the conduit or raceway containing wiring conductors is not permitted by *NFPA 70* unless the box is specifically listed for the purpose and installed in accordance with the listing.

(2) Rigid mounting to the wall of the duct with the sensing element protruding into the duct
(3) Installation outside the duct with rigidly mounted sampling tubes protruding into the duct
(4) Installation through the duct with projected light beam

System Design Tip

Items (1) and (2) are often most appropriate for smaller ducts or where an engineering analysis shows that smoke concentrations will be even across the duct cross section and that laminar flow is not going to produce a nonuniform smoke concentration. Item (3) is more suited to larger ducts. The use of sampling tubes enables the duct detector to sample the air across the entire duct cross section rather than a small portion of it. The designer should consult the manufacturer's technical instructions for installation limitations. Exhibit 17.42 shows an example of a duct-type smoke detector. Exhibit 17.43 illustrates the internal view of a duct-type smoke detector.

EXHIBIT 17.42

Duct-Type Smoke Detector. (Source: Hochiki America Corp., Buena Park, CA)

17.7.5.5.4 Detectors shall be mounted in accordance with the manufacturer's published instructions and shall be accessible for cleaning by providing access doors or panels in accordance with NFPA 90A.

Chapter 14 provides inspection and testing schedules for each type of detector. The accessibility of detectors is critical to facilitate cleaning. Poor or neglected maintenance is a dominant cause of nuisance alarms in smoke detectors.

17.7.5.5.5 The location of all detectors in air duct systems shall be permanently and clearly identified and recorded.

A permanent placard placed outside the first point of access is advisable to indicate that a detector is accessible from that point. The placard can be mounted on the wall beneath the ceiling tile that must

EXHIBIT 17.43

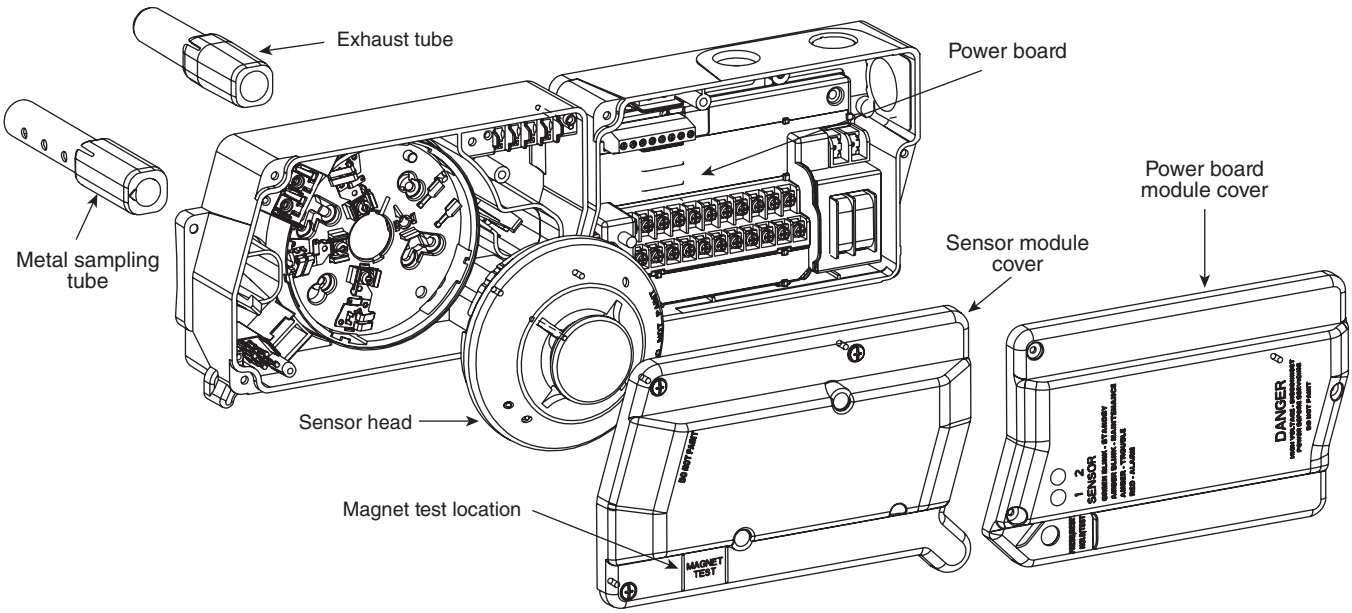

Internal View of Duct-Type Smoke Detector. (Source: System Sensor Corp., St. Charles, IL)

be removed to access the duct. HVAC and fire alarm drawings should clearly show the actual as-built locations of the detectors. In most cases, one drawing that shows only the smoke detector locations is useful. The locations can also be included in the display descriptor of addressable systems.

17.7.5.5.6 Detectors mounted outside of a duct that employs sampling tubes for transporting smoke from inside the duct to the detector shall be designed and installed to allow verification of airflow from the duct to the detector.

17.7.5.5.7 Detectors shall be listed for operation over the complete range of air velocities, temperature, and humidity expected at the detector when the air-handling system is operating.

The listing of the detector stipulates the range of air velocities over which it can operate, as well as the temperature and the relative humidity range. These last two criteria are particularly important where a general purpose detector is being installed in a duct detector housing. Given that HVAC system fans and ducts are often located in areas where comfort heating and cooling are not provided, the environment of the detector might exceed the limits observed in the listing investigation. In addition, when warm moist air is circulated through a cold duct smoke detector housing, condensation can occur in that housing. These conditions can seriously degrade detector performance and stability. Where these extremes are likely, the operating environment of the detector must be maintained within its operating range.

17.7.5.5.8 All penetrations of a return air duct in the vicinity of detectors installed on or in an air duct shall be sealed to prevent entrance of outside air and possible dilution or redirection of smoke within the duct.

17.7.5.6 Smoke Detectors for Door Release Service.

Two general methods of controlling doors with smoke detectors are available. The first is to use area smoke detectors to control the doors for that area. Either smoke detectors served by a selected circuit

of an FACU or specific addressable detectors are programmed to operate magnetic door release devices via the FACU. When one of the area smoke detectors renders an alarm, the control unit transfers to the alarm state and energizes the output circuit that controls the door holders. The requirements for such a system are addressed in Chapter 21. The second method is to control the door holder mechanism directly with a dedicated smoke detector or smoke detectors.

The requirements in 17.7.5.6 apply equally to both design concepts. When open area protection is used, 17.7.5.6.1 permits the spacing in the corridors as normally required for open area protection in conformance with 17.7.3 to be considered acceptable for smoke door release service. In that case, the explicit spacing requirements of 17.7.5.6.2 do not apply. When dedicated smoke detectors are used for door release service, the requirements of 17.7.5.6.3 through 17.7.5.6.6 apply.

17.7.5.6.1 Smoke detectors that are part of an open area protection system covering the room, corridor, or enclosed space on each side of the smoke door and that are located and spaced as required by 17.7.3 shall be permitted to accomplish smoke door release service.

FAQ

What location and spacing requirements apply when open area smoke protection is used?

Area detection installed in accordance with 17.7.3 is permitted to be used as long as area detection is provided on both sides of the doors to be closed. Discrete and dedicated smoke detectors separate from the area protection are not required to be used when the area detectors are wired or programmed to actuate the door release. Furthermore, the requirements of 17.7.5.6.5.1 through 17.7.5.6.5.4, which stipulate the quantities of detectors used for door release service, do not apply where both sides of the door are protected by open area smoke protection in accordance with 17.7.3.

17.7.5.6.2 Smoke detectors that are used exclusively for smoke door release service shall be located and spaced as required by 17.7.5.6.

Where area protection per 17.7.3 is not provided, and where automatic closure of doors at the presence of smoke is required, smoke detectors must be installed according to the prescriptive requirements in 17.7.5.6.3 through 17.7.5.6.6.

17.7.5.6.3 Where smoke door release is accomplished directly from the smoke detector(s), the detector(s) shall be listed for releasing service.

17.7.5.6.4 Smoke detectors shall be of the photoelectric, ionization, or other approved type.

17.7.5.6.5 The number of detectors required shall be determined in accordance with 17.7.5.6.5.1 through 17.7.5.6.5.4.

These placement requirements have been determined from a qualitative understanding of the expected behavior of a ceiling jet, similar to the physical principles from which the requirements for location and placement of area smoke protection have been derived. The original reason for this application of smoke detectors at smoke doors in corridors was to control smoke movement in the corridors. Early designs often used stand-alone smoke detectors that did not connect to a fire alarm system. Generally, this type of design is not used because area smoke detector coverage in the corridors performs the same function more rapidly than waiting for the smoke to travel to the doorway.

System Design Tip

If smoke detectors are installed only for door release, designers should consider the added benefit of using these detectors as part of the fire alarm system (if the building has one) and connect them to the FACU to actuate notification appliances when smoke is detected. If the smoke detectors from the

fire alarm system corridor detection are used to control the doors, they are covered under 17.7.5.6.1 and the spacing requirements at the doors outlined in 17.7.5.6.5 do not apply.

17.7.5.6.5.1 If doors are to be closed in response to smoke flowing in either direction, the requirements of 17.7.5.6.5.1(A) through 17.7.5.6.5.1(D) shall apply.

Both ceiling- and wall-mounted detectors may be used for door release. The prescribed locations for smoke detectors to control doors are depicted in Figure 17.7.5.6.5.1(A).

(A) If the depth of wall section above the door is 24 in. (610 mm) or less, one ceiling-mounted smoke detector shall be required on one side of the doorway only, or two wall-mounted detectors shall be required, one on each side of the doorway. Figure 17.7.5.6.5.1(A), part A or B, shall apply.

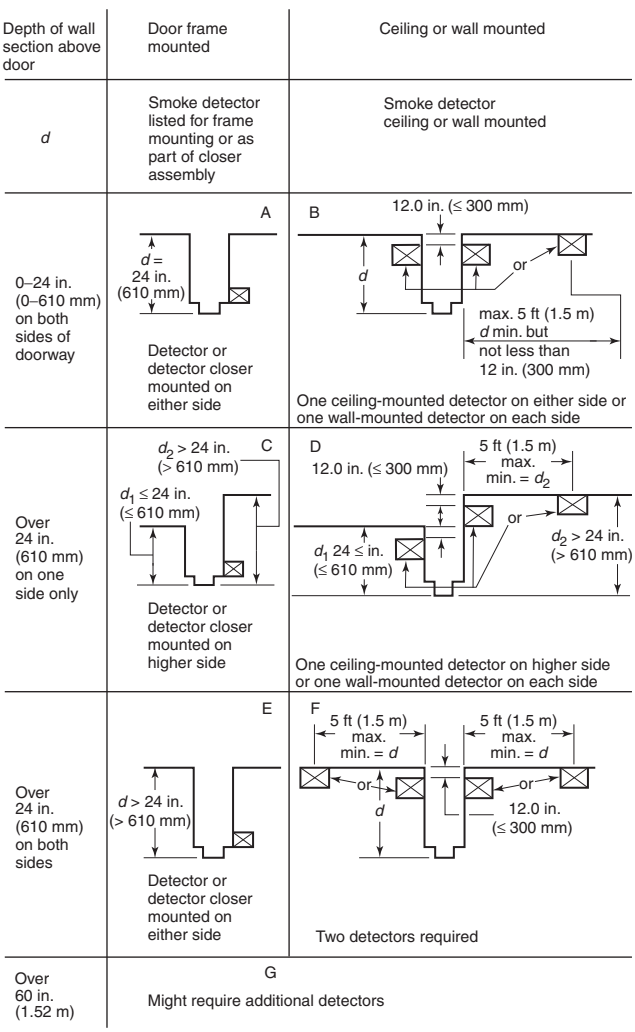

Δ ***FIGURE 17.7.5.6.5.1(A)*** *Detector Location Requirements for Wall Sections.*

The depth of the wall section 24 in. (610 mm) or less above the door is analogous to a deep beam (see 17.7.3.2.4) impeding the flow of smoke across a ceiling. Smoke detectors used for door release are permitted to be near the ceiling. Previously, these detectors would have to be installed at a distance of 4 in. to 12 in. (100 mm to 300 mm) below the ceiling to avoid placement in a dead air space. The 4 in. to 12 in. (100 mm to 300 mm) requirement was deleted in the 2016 edition of the Code to be consistent with current smoke behavior testing and knowledge and to correlate with 17.7.3.2.1.

FAQ

Why are two wall-mounted detectors required as opposed to a single ceiling-mounted detector?

The requirements have been determined from a qualitative assessment of anticipated smoke flows in a corridor where smoke flow is channeled by the corridor walls but must then flow under the door header or wall section immediately above those doors for them to close automatically. Where the wall section above the door is 24 in. (610 mm) or less, only one ceiling-mounted detector is required. It can be located on either side of the smoke-control door. Under the worst-case scenario, the door-control smoke detector is on the far side of the smoke-control door relative to the source of smoke. As smoke begins to flow into a corridor, it forms a layer of smoke immediately beneath the corridor ceiling. The upper portion of the corridor fills with smoke until it begins to spill beneath the top of the door opening. The ceiling-mounted smoke detector on the far side of the door responds, closing the door and preventing further ingress of smoke. Because the wall section is less than 24 in. (610 mm), it does not produce an inordinately long delay in response, even when the detector is on the far side of the door.

However, under the same worst-case scenario, if only one wall-mounted smoke detector is used, response is delayed until smoke fills both the corridor with the source of smoke and the far side corridor to the level of the smoke detector. Under that circumstance, the smoke-control doors have failed in their intended mission: to prevent the ingress of smoke into the corridor. Consequently, if the smoke detectors for door closure are mounted on the corridor walls, a smoke detector must be mounted on each side of the door.

(B) If the depth of wall section above the door is greater than 24 in. (610 mm) on one side only, one ceiling-mounted smoke detector shall be required on the higher side of the doorway only, or one wall-mounted detector shall be required on both sides of the doorway. Figure 17.7.5.6.5.1(A), part D, shall apply.

This paragraph addresses the condition illustrated in Figure 17.7.5.6.5.1(A), part D, where the depth of the wall section is greater than 24 in. (610 mm) on one side of the door only.

(C)* If the depth of wall section above the door is greater than 24 in. (610 mm) on both sides, two ceiling-mounted or wall-mounted detectors shall be required, one on each side of the doorway. Figure 17.7.5.6.5.1(A), part F, shall apply.

A.17.7.5.6.5.1(C) If the depth of wall section above the door is 60 in. (1.52 m) or greater, additional detectors might be required as indicated by an engineering evaluation.

As the average door height is a nominal 84 in. to 96 in. (2.1 m to 2.4 m), the addition of 60 in. (1.52 m) above the door results in a ceiling height as high as 13 ft (3.9 m). The data in Annex B suggest that when the ceiling height exceeds 10 ft (3 m), reduced spacing for heat detectors is required if there is to be no reduction in performance due to the higher ceilings. In the modeling of smoke detectors, a similar logic is accepted. Thus, when the height above the door exceeds 60 in. (1.52 m) on either side of the door opening, an engineering evaluation might be warranted to determine if reduced smoke detector spacing is appropriate for the specific application under consideration. The engineering evaluation would

be most appropriate where the door closing is initiated only by detectors within 5 ft (1.52 m) of the door openings. In cases where multiple devices are used for door closing operation, such as systems with full corridor detection or closing initiated by sprinkler waterflow in fully sprinklered buildings, the need for such an engineering evaluation is generally not warranted.

(D) If a detector is specifically listed for door frame mounting, or if a listed combination or integral detector–door closer assembly is used, only one detector shall be required if installed in the manner recommended by the manufacturer's published instructions. Figure 17.7.5.6.5.1(A), parts A, C, and E, shall apply.

17.7.5.6.5.2 If door release is intended to prevent smoke transmission from one space to another in one direction only, detectors located in the space to which smoke is to be confined, regardless of the depth of wall section above the door, shall be in accordance with 17.7.5.6.6. Alternatively, a smoke detector conforming with 17.7.5.6.5.1(D) shall be permitted to be used.

Occasionally, there is a need to limit smoke spread in only one direction. When that is the case, 17.7.5.6.5.2 permits the elimination of some detectors that would otherwise be required.

17.7.5.6.5.3 If there are multiple doorways, additional ceiling-mounted detectors shall be required as specified in 17.7.5.6.5.3(A) through 17.7.5.6.5.3(C).

(A) If the separation between doorways exceeds 24 in. (610 mm), each doorway shall be treated separately. Figure 17.7.5.6.5.3(A), part E, shall apply.

(B) Each group of three or more doorway openings shall be treated separately. Figure 17.7.5.6.5.3(B) shall apply.

(C) Each group of doorway openings that exceeds 20 ft (6.1 m) in width, measured at its overall extremes, shall be treated separately. Figure 17.7.5.6.5.3(C) shall apply.

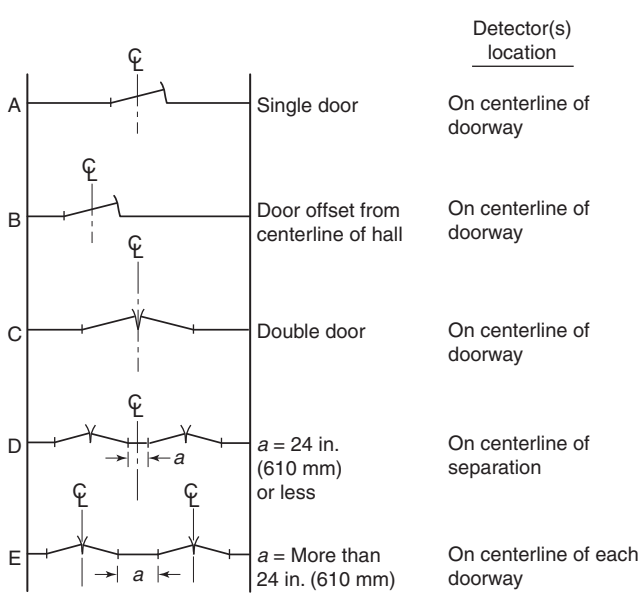

FIGURE 17.7.5.6.5.3(A) Detector Location Requirements for Single and Double Doors.

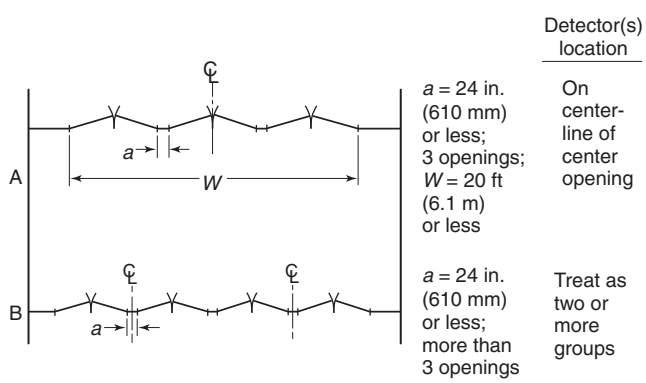

FIGURE 17.7.5.6.5.3(B) Detector(s) Location ±24 in. (610 mm) Requirements for Group Doorways.

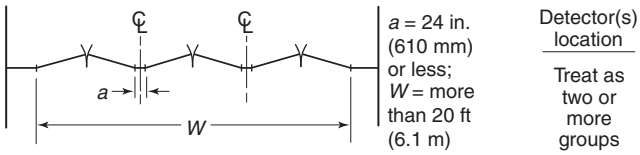

FIGURE 17.7.5.6.5.3(C) *Detector(s) Location ±24 in. (610 mm) Requirements for Group Doorways over 20 ft (6.1 m) in Width.*

The 2016 edition of the Code was revised to permit detectors at grouped doorway openings to be installed 24 in. (0.6 m) from either side of the doorway's centerline, as illustrated in Figures 17.7.5.6.5.3(B) and 17.7.5.6.5.3(C).

17.7.5.6.5.4 If there are multiple doorways and listed door frame–mounted detectors, or if listed combination or integral detector–door closer assemblies are used, there shall be one detector for each single or double doorway.

17.7.5.6.6 The locations of detectors shall be determined in accordance with 17.7.5.6.6.1 and 17.7.5.6.6.2.

17.7.5.6.6.1 If ceiling-mounted smoke detectors are to be installed on a smooth ceiling for a single or double doorway, they shall be located as follows *[Figure 17.7.5.6.5.3(A) shall apply]*:

(1) On the centerline of the doorway
(2) No more than 5 ft (1.5 m), measured along the ceiling and perpendicular to the doorway *[Figure 17.7.5.6.5.1(A) shall apply.]*
(3) No closer than shown in Figure 17.7.5.6.5.1(A), parts B, D, and F

17.7.5.6.6.2 If ceiling-mounted detectors are to be installed in conditions other than those outlined in 17.7.5.6.6.1, an engineering evaluation shall be made.

17.7.6 Special Considerations.

System Design Tip

Although the Code makes every effort to establish minimum compliance criteria to address situations that have a documented history of affecting smoke detection systems, the issues addressed by the requirements of 17.7.6 cannot cover every conceivable contingency. The designer should consider all known factors in the protected area that have the potential to contribute to unwanted alarms or that could prevent the successful conveyance of smoke to the detector.

17.7.6.1 Spot-Type Detectors.

17.7.6.1.1 Combination and multi-sensor smoke detectors that have a fixed-temperature element as part of the unit shall be selected in accordance with Table 17.6.2.1 for the maximum ceiling temperature expected in service.

The temperature rating of a fixed-temperature heat sensor incorporated into a combination or multi-sensor detector does not necessarily imply that the detector is listed for installation in spaces where the ambient temperature is as high as permitted by Table 17.6.2.1. For combination and multi-sensor detectors, care must be taken to ensure that ambient conditions fall within those listed for the detector as a whole. Refer to the definitions of the terms *combination detector* and *multi-sensor detector* in 3.3.70.4 and 3.3.70.13, respectively.

In most fires, smoke detectors respond much sooner than either automatic sprinklers or heat detectors. Even in flaming fire tests, smoke detectors actuate long before typical fixed-temperature heat detectors. The difference in the speed of response becomes even more dramatic with low-energy fires. Because of this profound difference in the speed of response, adding a fixed-temperature heat detector to a smoke detector adds little to overall fire detection performance, particularly when the design criteria imply a life safety objective.

FAQ What advantage can multi-sensor detectors provide in smoke detection applications?

Multi-sensor detectors are available that employ ionization, photoelectric, and thermistor-type thermal sensors in a single device that uses a microcomputer algorithm to match the sensed conditions to known fire "signatures" stored in memory. While these detectors are tested to the same criteria in ANSI/UL 268 as conventional smoke detectors, the multi-sensor architecture provides improved immunity to known false alarm sources. See the definition of *multi-criteria detector* in 3.3.70.12 and the associated commentary.

17.7.6.1.2* Holes in the back of a detector shall be covered by a gasket, sealant, or equivalent means, and the detector shall be mounted so that airflow from inside or around the housing does not prevent the entry of smoke during a fire or test condition.

A.17.7.6.1.2 Airflow through holes in the rear of a smoke detector can interfere with smoke entry to the sensing chamber. Similarly, air from the conduit system can flow around the outside edges of the detector and interfere with smoke reaching the sensing chamber. Additionally, holes in the rear of a detector provide a means for entry of dust, dirt, and insects, each of which can adversely affect the detector's performance.

System Design Tip

The designer should be aware of any factor in the protected area that could contribute to unwanted alarms or that could prevent the successful conveyance of smoke to the detector, and then take steps consistent with the manufacturer's installation instructions to address those factors.

17.7.6.2* High-Rack Storage. The location and spacing of smoke detectors for high-rack storage shall address the commodity, quantity, and configuration of the rack storage.

The term *high-rack storage* is a general term used to describe rack storage that could exceed 12 ft (3.7 m) in height. Some codes use the term *rack storage*; *NFPA 72* uses the term *high-rack storage*.

A.17.7.6.2 For the most effective detection of fire in high-rack storage areas, detectors should be located on the ceiling above each aisle and at intermediate levels in the racks. This is necessary to detect smoke that is trapped in the racks at an early stage of fire development when insufficient thermal energy is released to carry the smoke to the ceiling. Earliest detection of smoke is achieved by locating the intermediate level detectors adjacent to alternate pallet sections as shown in Figure A.17.7.6.2(a) and Figure A.17.7.6.2(b). The detector manufacturer's published instructions and engineering judgment should be followed for specific installations.

A projected beam–type detector can be permitted to be used in lieu of a single row of individual spot-type smoke detectors.

Sampling ports of an air sampling–type detector can be permitted to be located above each aisle to provide coverage that is equivalent to the location of spot-type detectors. The manufacturer's published instructions and engineering judgment should be followed for the specific installation.

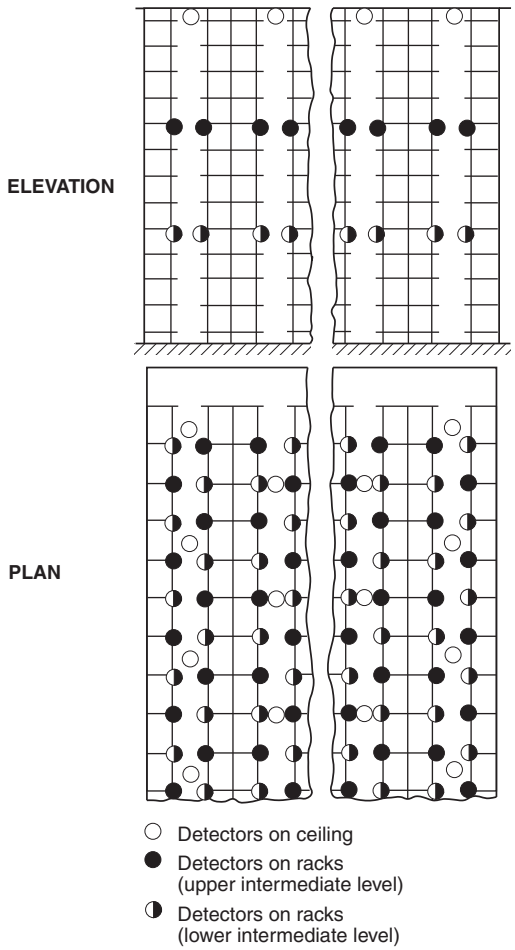

FIGURE A.17.7.6.2(a) *Detector Location for Solid Storage (Closed Rack) in Which Transverse and Longitudinal Flue Spaces Are Irregular or Nonexistent, as for Slatted or Solid Shelved Storage.*

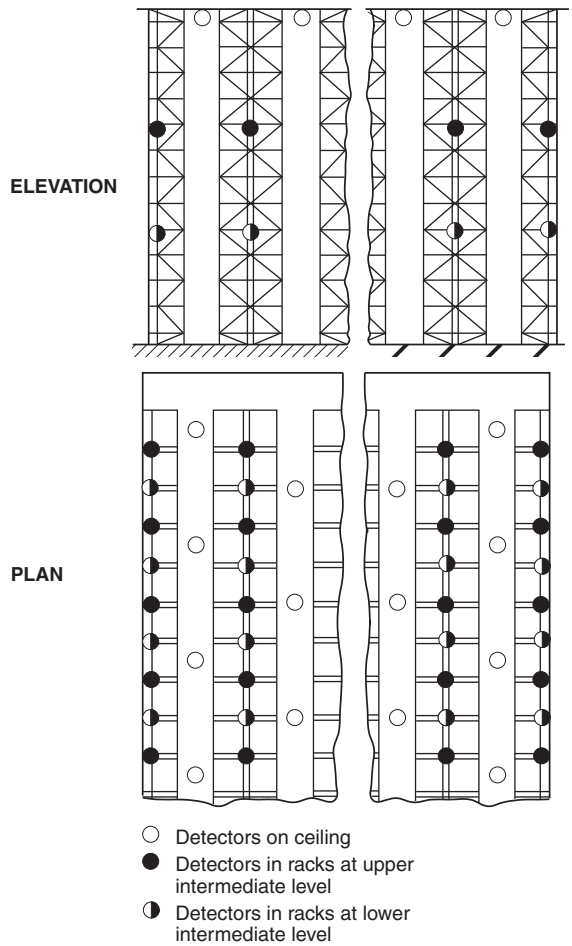

FIGURE A.17.7.6.2(b) *Detector Location for Palletized Storage (Open Rack) or No Shelved Storage in Which Regular Transverse and Longitudinal Flue Spaces Are Maintained.*

Fire protection for high-rack storage warehouses is a difficult problem. The fuel load per unit of floor area is extremely high, and the accessibility to the fuel is relatively low. Also, the combustibility of the materials in any given rack can vary from nominally noncombustible to flammable.

The orientation of the fuel also creates vertical flues between the combustibles that produce ideal conditions for the propagation of the fire and the worst possible conditions for extinguishment. Likewise, the presence of solid shelving can create horizontal flues that materially aid in horizontal fire spread. The shelves also tend to shield the fire from water discharged by the automatic fire suppression sprinkler system and hose streams intended to extinguish the fire. These factors make early detection highly desirable so that rapid extinguishment of the fire in the incipient stages is possible. It is virtually impossible to extinguish the fire once it becomes well established, as demonstrated by the catastrophic total losses that have occurred in high-rack storage facilities.

The guidance provided for locating detectors in rack storage arrays strives to ensure that any vertical flue spaces created by the stored commodities and solid shelves are covered with a detector at some level. Care must be taken when installing detectors in these applications because they are vulnerable to damage as commodities are moved into and out of the storage racks.

Maintaining accessibility for service and maintenance while locating detectors for both maximum speed of response and minimum exposure to damage from operations is possible. System designs exist that have satisfied all three of these apparently conflicting requirements. Air sampling–type smoke detectors, with the piping network extended throughout each rack, as well as projected beam–type detectors, have been used successfully in this application.

17.7.6.3 High Air Movement Areas.

17.7.6.3.1* General. The purpose and scope of 17.7.6.3 shall be to provide location and spacing guidance for smoke detectors intended for early warning of fire in high air movement areas.

N **A.17.7.6.3.1** Detectors provided for the control of smoke spread are covered by the requirements of 17.7.5.

17.7.6.3.2 Location. Smoke detectors shall not be located directly in the airstream of supply registers.

17.7.6.3.3* Spacing.

A.17.7.6.3.3 Smoke detector spacing depends on the movement of air within the room.

17.7.6.3.3.1 Smoke detector spacing shall be reduced where the airflow in a defined space exceeds 8 minutes per air change (total space volume) (equal to 7.5 air changes per hour).

17.7.6.3.3.2 Where spacing must be adjusted for airflow, spot-type smoke detector spacing shall be adjusted in accordance with Table 17.7.6.3.3.2 or Figure 17.7.6.3.3.2 before making any other spacing adjustments required by this Code.

Usually, high air movement areas are characterized by six or more air changes per hour. The most regularly encountered example of a high air movement area is the data center (computer room).

Δ ***TABLE 17.7.6.3.3.2*** *Smoke Detector Spacing Based on Air Movement (Not to Be Used for Under-Floor or Above-Ceiling Spaces)*

Minutes per Air Change	*Air Changes per Hour*	*Spacing per Detector*	
		ft²	*m²*
1	60	125	12
2	30	250	23
3	20	375	35
4	15	500	46
5	12	625	58
6	10	750	70
7	8.6	875	81
8	7.5	900	84
9	6.7	900	84
10	6	900	84

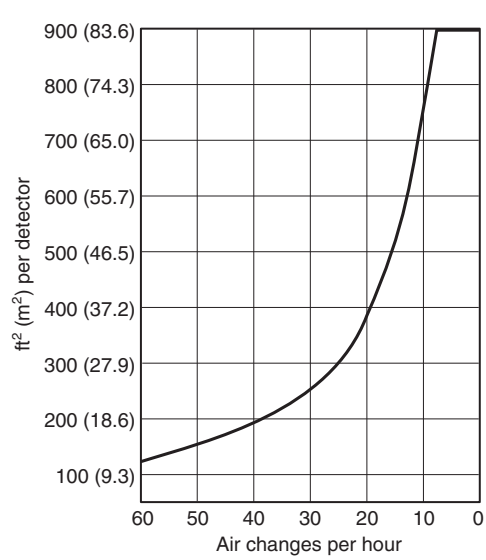

FIGURE 17.7.6.3.3.2 *High Air Movement Areas (Not to Be Used for Under-Floor or Above-Ceiling Spaces).*

Because of the very high concentration of value in a data center, reducing the spacing of spot-type smoke detectors is common. This spacing can be derived from Table 17.7.6.3.3.2 and Figure 17.7.6.3.3.2. In some cases, an authority having jurisdiction, such as an insurance carrier, will establish a spacing criterion for such locations.

FAQ

What are the requirements that apply to smoke detection in under-floor or above-ceiling spaces used for environmental air?

Under-floor and above-ceiling spaces used for environmental air are addressed in 17.7.3.5, 17.7.4.1, 17.7.4.2, and 17.7.4.4. Table 17.7.6.3.3.2 and Figure 17.7.6.3.3.2 are not intended to be used to compute detector spacing for spaces under the floor or above the ceiling — they provide the detector spacing for high air movement ambient conditions in areas other than under-floor and above-ceiling spaces.

As air movement in these spaces increases, air currents disrupt the formation of a ceiling jet, and mixing can result in dilution and other effects that can affect detection. For this reason, detector spacing is reduced as the number of air changes increases. Spot-type detectors might not be the best detectors for most very high air movement areas. Air sampling–type detectors can offer increased sensitivity and have been used for such spaces successfully. See the accompanying Closer Look feature for more on high air movement areas and how they affect smoke detection.

Closer Look

How High Air Movement Areas Affect Smoke Detection

High air movement areas might not necessarily mean high air velocity at the detector or detection location. Airflow patterns at the detector locations should be measured and recorded in the system documentation.

System Design Tip

The velocity of the air stream from supply registers supplying high air movement areas is likely to exceed 300 ft/min (1.5 m/sec), which is the maximum for which most detectors are listed. (See 17.7.1.8 and 17.7.1.9.) When detectors are tested for a listing that includes high airflow environments, they are tested to ensure they do not render a false alarm in high airflow conditions. No test verifies that they will detect fires as quickly as they would in a non–high airflow condition. The designer should take into consideration any potential effects of high air velocity at the detector location on the ability of the detector to sense smoke from the fires it is intended to detect, as well as the effect the air velocity might have on the detector stability and maintenance needs.

System Design Tip

Some authorities having jurisdiction compute the rate of air change based on the entire air volume, including the room, under-floor plenum, and above-ceiling plenum. In other circumstances, the above-ceiling space is not part of the working air volume of the hazard area, and only the volumes of the room and the under-floor space are used to compute air changes per hour. Before the design process begins, the HVAC system must be well understood, and the designer and the authorities having jurisdiction must agree on what air volume the calculations are based.

The spacing adjustments in Table 17.7.6.3.3.2 and Figure 17.7.6.3.3.2 were developed from experimental data that was developed using spot-type detectors. No research has been found that allows the development of analogous spacing reductions, if any, for air sampling–type or projected beam–type smoke detection. On a qualitative basis, the principal impact of high air movement is suspected to be on the disruption of the plume and the distortion or prevention of the formation of a ceiling jet. The fire must compete with the normal air movement to establish the flow effects on which smoke detection normally relies. Because smoke detection is usually placed in high air movement areas to achieve property protection and mission continuity objectives, a performance-based approach should be considered.

17.7.6.3.3.3 Air-sampling or projected beam smoke detectors shall be installed in accordance with the manufacturer's published instructions.

17.7.6.3.4 HVAC Mechanical Rooms. Where HVAC mechanical rooms are used as an air plenum for return air, the spacings of smoke detectors shall not be required to be reduced based on the number of air changes.

Where smoke detection is employed in HVAC mechanical rooms, the objective is to detect a fire involving the HVAC units. This objective does not require a spacing reduction. Where HVAC mechanical rooms are used as a plenum for return air, the HVAC system is the dominant mechanism for smoke transport, and reduced spacing of detectors would not improve detection response.

17.7.7 Video Image Smoke Detection.

Video cameras can be used in conjunction with frame capture and comparison software for the purposes of detecting smoke. See Exhibit 17.44 for an example of a conceptual video detection system. For requirements related to video image flame detection, see 17.8.5.

EXHIBIT 17.44

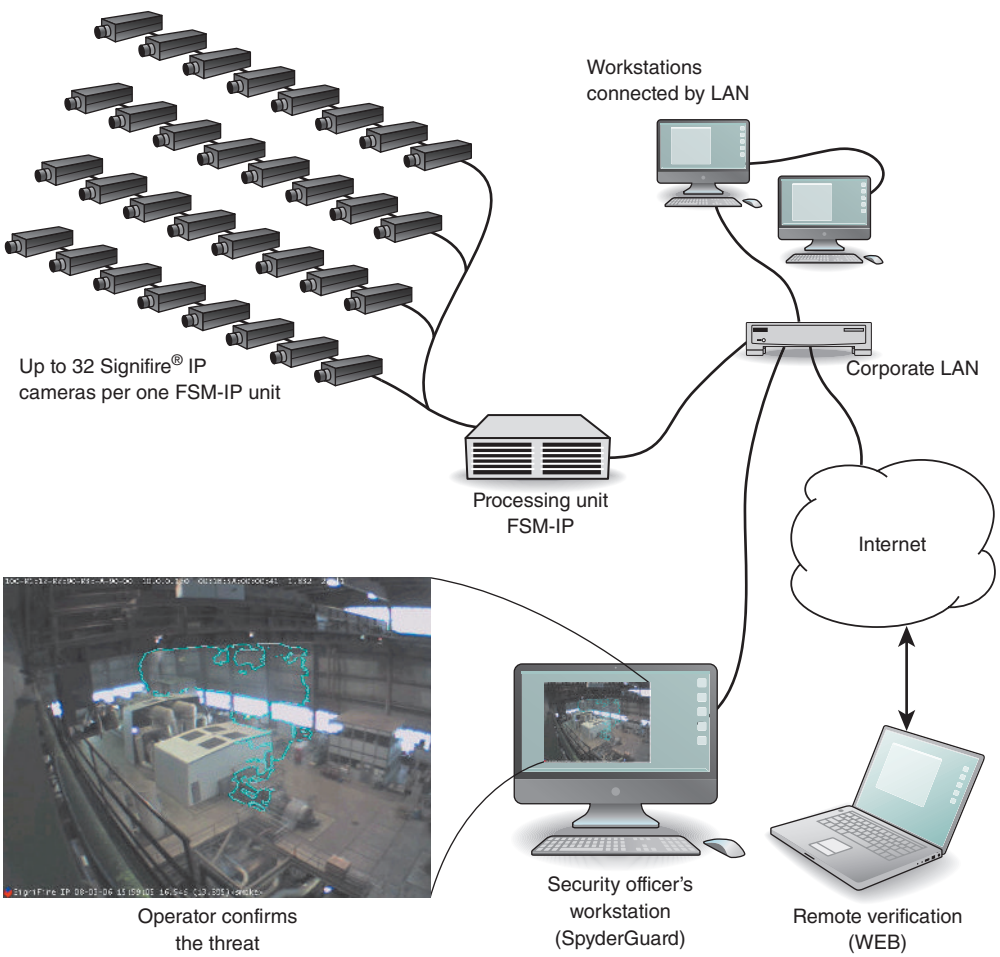

Conceptual Video Detection System. (Source: Fike Video Analytics Corporation, Blue Springs, MO)

17.7.7.1 Video image smoke detection systems and all of the components thereof, including hardware and software, shall be listed for the purpose of smoke detection.

The organization providing the listing is responsible for evaluating the efficacy of the equipment and software for a defined scope of applications. Limits on the size of the monitored compartment versus the size of the fire that can be detected reliably, as well as limitations on the environment in the compartment necessary to allow reliable detection, have not been established.

17.7.7.2 Video image smoke detection systems shall comply with all of the applicable requirements of Chapters 1, 10, 14, 17, and 23 of this Code.

A video image smoke detection system consists of one or more video cameras, a signal router or interface, and a computer to analyze each video image frame in real time. Chapters 1, 10, 14, 17, and 23 each include requirements that apply to such a system. For example, because each of these components requires power, they must comply with the power supply criteria in Chapter 10. All the interconnections between cameras, interfaces, and computers must be monitored for integrity. All the components in the system must be listed for the purpose for which they are used. The alarm signal must be conveyed to the FACU via a circuit that is monitored for integrity. The requirements in Chapters 1, 10, 14, 17, and 23 address these and many other issues that are relevant to the video image smoke detection system.

17.7.7.2.1 Systems shall be designed in accordance with the performance-based design requirements of Section 17.3.

Because prescriptive design criteria have not been developed for video image smoke detection, each video image smoke detection system should be designed with complete documentation, including the basis of the design, calculations demonstrating the capability of detecting the design fire over the entire volume covered by the system, and reliability calculations demonstrating that the system will be adequately reliable over the maintenance interval for the system. Section B.2 provides guidance on the performance-based design method. Also see the commentary following Section 17.3.

17.7.7.2.2 The location and spacing of video image smoke detectors shall comply with the requirements of 17.11.5.

Subsection 17.11.5 establishes general spacing and location rules that apply to video image smoke detection systems.

17.7.7.3* Video signals generated by cameras that are components of video image smoke detection systems shall be permitted to be transmitted to other systems for other uses only through output connections provided specifically for that purpose by the video system manufacturer.

A.17.7.7.3 Facility owners and managers might desire to use cameras and their images for purposes other than smoke detection. The intent of this paragraph is not to prohibit additional uses, but to ensure the integrity of the life safety smoke detection mission of the equipment.

FAQ What types of applications are suitable for video image detection systems?

Video image smoke detection systems are best suited for large open spaces with high-value assets that warrant such protection. In many cases, the facility security system includes cameras to monitor the space during unoccupied periods to maintain surveillance. There is little basis for two sets of cameras,

one for smoke detection and a second for surveillance. The video signal may be shared, provided that the equipment and the software that allow the sharing are listed for the purpose and that the security system does not interfere with the fire safety use of the signal.

Δ **17.7.7.4*** All component controls and software shall be protected from unauthorized changes.

A.17.7.7.4 Video image smoke detection control and software should be protected from tampering by passwords, software keys, or other means of limiting access to authorized/qualified personnel. Component settings include any control or programming that might affect the operation of coverage of the detection. This includes, but is not limited to, camera focus, field of view, motion sensitivity settings, and change of camera position. Any changes in component settings or ambient conditions that affect the design performance of the detector should initiate a trouble signal.

Video image smoke detection systems operate by comparing the view of the hazard area to earlier views of the hazard area and initiating alarm signals when the changes in groups of pixels are consistent with the presence of smoke in the monitored space. Changes in camera position, focus, contrast setting, field of view, ambient lighting, and the criteria in the software for a smoke detection decision all can affect the reliability of the system as a smoke detection means. The system must be designed to provide protection against unauthorized changes that could affect the system's performance or reliability. Any intentional changes must be subject to the acceptance testing criteria in Chapter 14.

N **17.7.7.5** All changes to the software or component settings shall be tested in accordance with Chapter 14.

17.8 Radiant Energy–Sensing Fire Detectors.

The term *radiant energy–sensing fire detectors* encompasses both of the terms *flame detectors* and *spark/ember detectors*. (See the definitions in 3.3.70.8, 3.3.70.17, and 3.3.70.21.) Although the physics behind the operation of both types of radiant energy–sensing fire detectors is largely the same, their applications are radically different. Flame detectors are generally employed in large open spaces where lines of sight from the detector to the anticipated fire location are clear and ambient lighting is normal. These open spaces can include fuel loading racks, aircraft hangars, electrostatic paint booths, and petroleum production and processing facilities. Spark/ember detectors are usually used on pneumatic-conveying system ductwork, enclosed belt conveyors and other normally dark locations in wood processing and woodworking plants, refuse-derived fuel plants, chemical plants, and other facilities where combustible particulate solids are processed or conveyed.

The design approach recognized for radiant energy–sensing fire detectors is a performance-based approach. This type of detector has no prescriptive spacing nor a uniform test standard that results in detectors from different manufacturers all having roughly equivalent sensitivities. The opposite is the case. Each make and model detector has unique performance attributes, and the system design must take into account those design attributes.

For each type of radiant energy–sensing fire detector, the fire to be detected must be quantified in terms of an energy release rate (power), usually measured in terms of Btu per second or kilowatts for flame detectors and milliwatts or microwatts for spark/ember detectors. A worst-case scenario is considered where the "design fire" is situated in the least favorable location relative to the detector. The universal response equation is solved using the sensitivity parameter published for the detector (and verified by the organization providing the listing) to determine whether the detector will respond to the worst-case scenario. This process is repeated with each location or detector in the design. This design method is the only one recognized. A detailed description of the design method is provided in Annex B.

17.8.1* General.

A.17.8.1 For the purpose of this Code, radiant energy includes the electromagnetic radiation emitted as a by-product of the combustion reaction, which obeys the laws of optics. This includes radiation in the ultraviolet, visible, and infrared portions of the spectrum emitted by flames or glowing embers. These portions of the spectrum are distinguished by wavelengths as shown in Table A.17.8.1.

TABLE A.17.8.1 *Spectrum Wavelength Ranges*

Radiant Energy	*µm*
Ultraviolet	0.1–0.35
Visible	0.36–0.75
Infrared	0.76–220

Conversion factors: 1.0 µm = 1000 nm = 10,000 Å.

The radiant emissions from a flame and from an ember are very different. Although they share similar physical principles, flame detectors and spark/ember detectors are applied differently. Subsection A.17.8.1 clarifies radiant energy (which is detected with either flame or spark/ember detectors using electro-optical methods to sense sparks, embers, and flames) to distinguish it from heat, which is commonly detected with heat detectors using convective heat transfer. See 3.3.321 for the definition of the term *wavelength* and A.3.3.321 for its associated explanatory material.

17.8.1.1 The radiant energy detection design documentation shall state the required performance objective of the system.

The design documentation should clearly state the performance objective of the system and the criteria that are used to demonstrate attainment of that objective. The requirements in Section 17.8 establish criteria for radiant energy–sensing fire detectors in performance-based terms that can be addressed only through a performance-based design.

Δ **17.8.1.2** The purpose and scope of Section 17.8 shall be to provide requirements for the selection, location, and spacing of fire detectors that sense the radiant energy produced by burning substances.

N **17.8.1.3** These detectors shall be categorized as flame detectors and spark/ember detectors.

17.8.2* Fire Characteristics and Detector Selection.

System Design Tip

When using radiant energy–sensing fire detectors, the designer must match the detector to the radiant emissions, or signature, of the flame or spark/ember to be detected. The designer must do so with a degree of precision and attention to detail that is not generally required with other types of detectors.

System Design Tip

The requirements of Chapter 17 effectively direct the system designer to work through an analysis to arrive at the most appropriate detector for the fire hazard under consideration. The first decision is whether a flame detector or spark/ember detector is the most appropriate type of radiant energy–sensing fire detector. The type of detector is often determined by the physical state of the material involved in the fire.

FAQ

What is the difference between gas-phase combustion and solid-phase combustion?

Combustion occurs in the gas phase and in the solid phase. Flammable gases, flammable liquids, combustible liquids, and many combustible solids will support the formation of a flame. See the definition of the term *flame* in 3.3.118. With a flame, the combustion takes place in the gas phase, regardless of the physical state of the unburned fuel. The heat from the combustion gasifies the fuel, allowing it to mix with air, supporting the flame. Because gas molecules are free to vibrate in free space, the flame spectra show typical emission spikes that indicate flame intermediates and products. Flame detectors respond to the radiant emissions that occur as the result of gas-phase chemical combustion reactions that take place in the flame.

Many solids also burn in the solid phase as embers. See the definition of the term *ember* in 3.3.87. In solid-phase combustion, the molecules on the surface of the fuel particle are oxidized off the surface of the particle without the development of a layer of gasified fuel, which could produce a flame. Combustion intermediates (partially oxidized molecules) and often combustion products are locked up on the surface of the fuel particle and are not free to assume the diverse vibrational states of a gas-phase molecule. As a result, the radiant emissions in solid-phase combustion are profoundly different from those in gas-phase combustion. Exhibit 17.45 illustrates these differences by comparing the radiant emissions of an oak ember with those of a gasoline flame. This difference in combustion radiant emissions necessitates different types of radiant energy–sensing fire detectors for the different physical combustion states. Spark/ember detectors are designed to respond to the infrared emissions that result from solid-phase combustion reactions in the surface of a solid fuel. While most spark/ember detectors will respond to a flame, most flame detectors will not respond to a glowing ember.

In an effort to reduce unwanted alarms from non-fire radiant-emission sources, flame detector designers have developed detectors that look for specific radiant-emission wavelengths that are associated with the combustion process of particular fuels. The result is that detectors will detect one type of radiant emissions from one class of fuels but will be virtually blind to fires involving other combustibles. A thorough understanding of how these detectors operate is necessary if they are to be applied properly. See Exhibits 17.46 through 17.50 for examples of spectral response characteristics of commonly encountered flame detectors compared to the emissions produced by two fuels.

System Design Tip

EXHIBIT 17.45

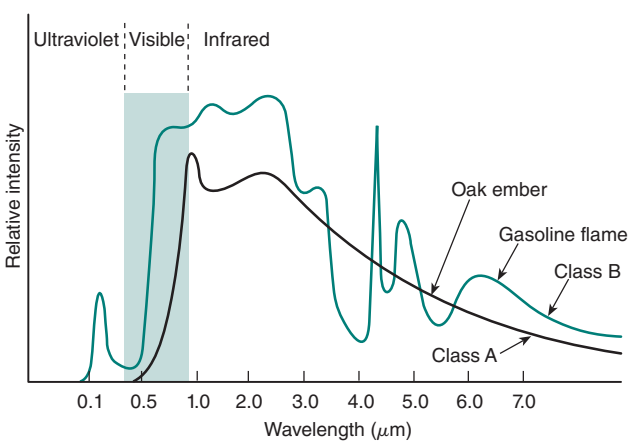

Spectral Emission of Class A (Oak Ember) and Class B (Gasoline Flame) Combustibles. (Source: J. M. Cholin Consultants, Inc., Oakland, NJ)

EXHIBIT 17.46

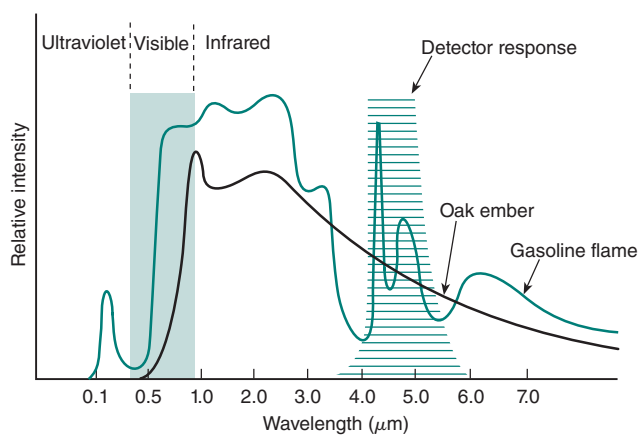

Spectral Response of Single Wavelength Infrared Flame Detector Superimposed on Spectrum of Typical Radiators. (Source: J. M. Cholin Consultants, Inc., Oakland, NJ)

EXHIBIT 17.47

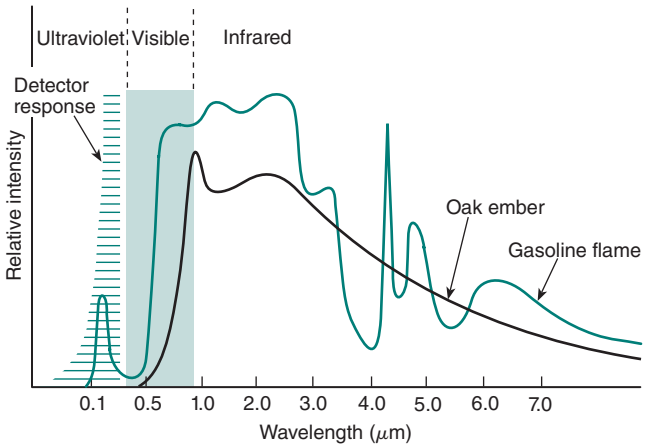

Spectral Response of Ultraviolet (UV) Flame Detector Superimposed on Spectrum of Typical Radiators. (Source: J. M. Cholin Consultants, Inc., Oakland, NJ)

EXHIBIT 17.48

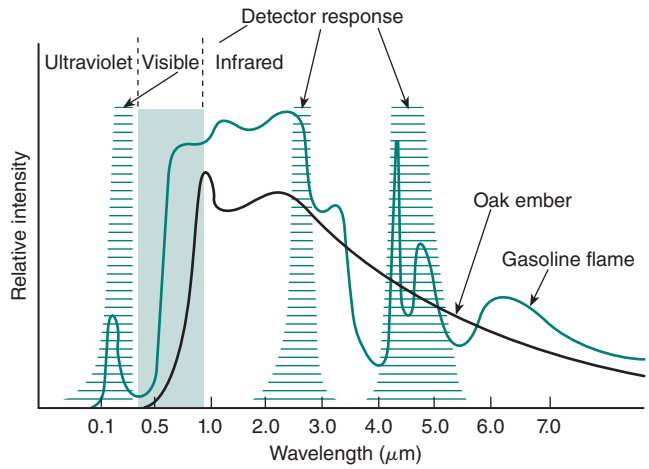

Spectral Response of Ultraviolet/Infrared (UV/IR) Flame Detector Superimposed on Spectrum of Typical Radiators. (Source: J. M. Cholin Consultants, Inc., Oakland, NJ)

EXHIBIT 17.49

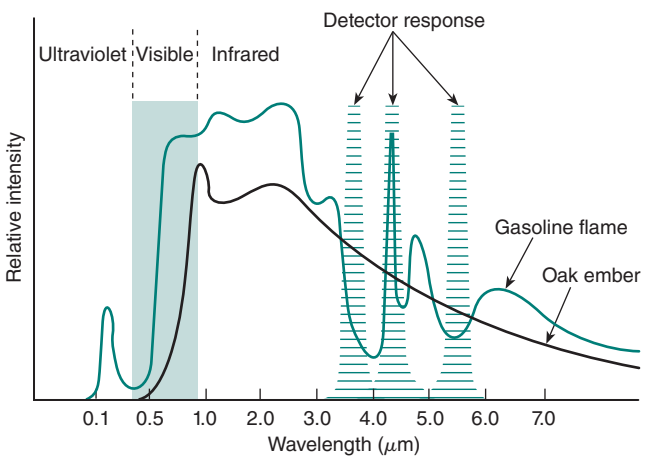

Spectral Response of Multiple Wavelength Infrared (IR/IR) Flame Detector Superimposed on Spectrum of Typical Radiators. (Source: J. M. Cholin Consultants, Inc., Oakland, NJ)

EXHIBIT 17.50

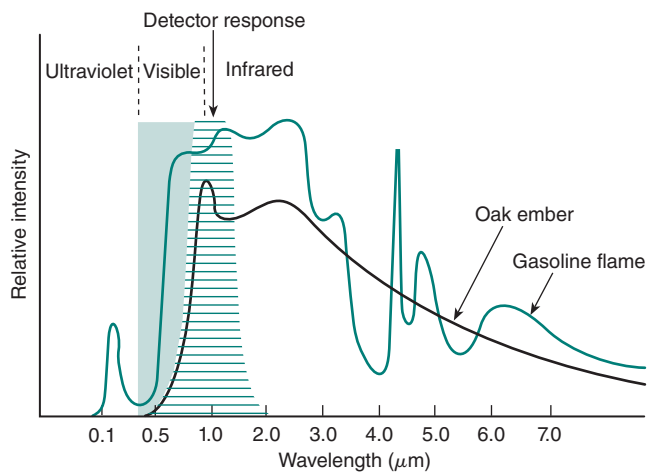

Spectral Response of Infrared Spark/Ember Detector Superimposed on Spectrum of Typical Radiators. (Source: J. M. Cholin Consultants, Inc., Oakland, NJ)

A.17.8.2 Following are operating principles for two types of detectors:

(1) *Flame Detectors.* Ultraviolet flame detectors typically use a vacuum photodiode Geiger–Muller tube to detect the ultraviolet radiation that is produced by a flame. The photodiode allows a burst of current to flow for each ultraviolet photon that hits the active area of the tube. When the number of current bursts per unit time reaches a predetermined level, the detector initiates an alarm. A single wavelength infrared flame detector uses one of several different photocell types to detect the infrared emissions in a single wavelength band that are produced by a flame. These detectors generally include provisions to minimize alarms from commonly occurring infrared sources

such as incandescent lighting or sunlight. An ultraviolet/infrared (UV/IR) flame detector senses ultraviolet radiation with a vacuum photodiode tube and a selected wavelength of infrared radiation with a photocell and uses the combined signal to indicate a fire. These detectors need exposure to both types of radiation before an alarm signal can be initiated. A multiple wavelength infrared (IR/IR) flame detector senses radiation at two or more narrow bands of wavelengths in the infrared spectrum. These detectors electronically compare the emissions between the bands and initiate a signal where the relationship between the two bands indicates a fire.

System Design Tip

Some ultraviolet/infrared (UV/IR) flame detectors require radiant emissions at 0.2 microns (μm) (UV) and 2.5 μm (IR). Other UV/IR flame detectors require radiant emissions at 0.2 μm (UV) and nominal 4.7 μm (IR). Some IR/IR flame detectors compare radiant emissions at 4.3 μm (IR) to a reference at nominal 3.8 μm (IR). Other IR/IR flame detectors use a nominal 5.6 μm (IR) reference.

Different products use different slices of the spectrum for detection. The designer must verify that the fuels in the hazard area emit radiation at the wavelengths that the detectors use for detection.

(2) *Spark/Ember Detectors.* A spark/ember-sensing detector usually uses a solid state photodiode or phototransistor to sense the radiant energy emitted by embers, typically between 0.5 microns and 2.0 microns in normally dark environments. These detectors can be made extremely sensitive (microwatts), and their response times can be made very short (microseconds).

17.8.2.1* The type and quantity of radiant energy–sensing fire detectors shall be determined on the basis of the performance characteristics of the detector and an analysis of the hazard, including the burning characteristics of the fuel, the fire growth rate, the environment, the ambient conditions, and the capabilities of the extinguishing media and equipment.

A.17.8.2.1 The radiant energy from a flame or spark/ember is comprised of emissions in various bands of the ultraviolet, visible, and infrared portions of the spectrum. The relative quantities of radiation emitted in each part of the spectrum are determined by the fuel chemistry, the temperature, and the rate of combustion. The detector should be matched to the characteristics of the fire.

Almost all materials that participate in flaming combustion emit ultraviolet radiation to some degree during flaming combustion, whereas only carbon-containing fuels emit significant radiation at the 4.35 micron (carbon dioxide) band used by many detector types to detect a flame. *(See Figure A.17.8.2.1.)*

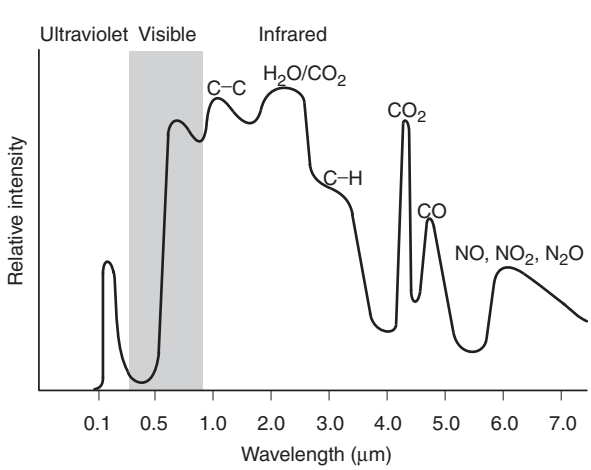

FIGURE A.17.8.2.1 *Spectrum of Typical Flame (Free-Burning Gasoline).*

The radiant energy emitted from an ember is determined primarily by the fuel temperature (Planck's law emissions) and the emissivity of the fuel. Radiant energy from an ember is primarily infrared and, to a lesser degree, visible in wavelength. In general, embers do not emit ultraviolet energy in significant quantities (0.1 percent of total emissions) until the ember achieves temperatures of 3240°F (1727°C or 2000°K). In most cases, the emissions are included in the band of 0.8 microns to 2.0 microns, corresponding to temperatures of approximately 750°F to 1830°F (398°C to 1000°C).

Most radiant energy detectors have some form of qualification circuitry within them that uses time to help distinguish between spurious, transient signals and legitimate fire alarms. These circuits become very important where the anticipated fire scenario and the ability of the detector to respond to that anticipated fire are considered. For example, a detector that uses an integration circuit or a timing circuit to respond to the flickering light from a fire might not respond well to a deflagration resulting from the ignition of accumulated combustible vapors and gases, or where the fire is a spark that is traveling up to 328 ft/sec (100 m/sec) past the detector. Under these circumstances, a detector that has a high-speed response capability is most appropriate. On the other hand, in applications where the development of the fire is slower, a detector that uses time for the confirmation of repetitive signals is appropriate. Consequently, the fire growth rate should be considered in selecting the detector. The detector performance should be selected to respond to the anticipated fire.

The radiant emissions are not the only criteria to be considered. The medium between the anticipated fire and the detector is also very important. Different wavelengths of radiant energy are absorbed with varying degrees of efficiency by materials that are suspended in the air or that accumulate on the optical surfaces of the detector. Generally, aerosols and surface deposits reduce the sensitivity of the detector. The detection technology used should take into account those normally occurring aerosols and surface deposits to minimize the reduction of system response between maintenance intervals. It should be noted that the smoke evolved from the combustion of middle and heavy fraction petroleum distillates is highly absorptive in the ultraviolet end of the spectrum. If using this type of detection, the system should be designed to minimize the effect of smoke interference on the response of the detection system.

The environment and ambient conditions anticipated in the area to be protected impact the choice of detector. All detectors have limitations on the range of ambient temperatures over which they will respond, consistent with their tested or approved sensitivities. The designer should make certain that the detector is compatible with the range of ambient temperatures anticipated in the area in which it is installed. In addition, rain, snow, and ice attenuate both ultraviolet and infrared radiation to varying degrees. Where anticipated, provisions should be made to protect the detector from accumulations of these materials on its optical surfaces.

17.8.2.2* The selection of the radiant energy–sensing detectors shall be based on the following:

(1) Matching of the spectral response of the detector to the spectral emissions of the fire or fires to be detected
(2) Minimizing the possibility of spurious nuisance alarms from non-fire sources inherent to the hazard area

A.17.8.2.2 Normal radiant emissions that are not from a fire can be present in the hazard area. When selecting a detector for an area, other potential sources of radiant emissions should be evaluated. Refer to A.17.8.2.1 for additional information.

System Design Tip

The designer must select the most appropriate detector model or technology only after the type of combustion has been determined and the decision regarding type of detector to be used has been made.

FAQ

What must be determined before the designer can select the most appropriate detector?

The expected emission spectrum from the fuel is matched to the wavelength bands of the candidate detector to ensure response to the fire, using the criteria stated in the detector manufacturer's engineering documentation. The performance capabilities of the detector must be matched with the known radiant emissions of the fuel. To ascertain that the detector is appropriate for the fuels to be detected, the designer can use the performance attributes that were verified by a qualified testing laboratory during the listing evaluation. The candidate detector must then be evaluated for its unwanted alarm immunity with respect to the ambient or nuisance alarm sources anticipated in the hazard area. The information provided in A.17.8.2.1 also relates to 17.8.2.2(2) and should be used as guidance.

System Design Tip

The designer must also consider the impact of the full range of expected ambient conditions on both the detection capability and the stability of the candidate detector. Because both flame detectors and spark/ember detectors are routinely installed outdoors, they are exposed to the weather and fluctuations in temperature. The temperature range limits and other limiting weather-related conditions that are specified by the manufacturer must be examined to ensure that the detector has been qualified for the anticipated extremes. The designer should document the decision-making process in writing for future reference.

System Design Tip

17.8.3 Spacing Considerations.

The spacing considerations for radiant energy–sensing fire detectors are derived from the physics of light transmission. This method contrasts with fire plume dynamics and fluid flow physics, which dictate the spacing of heat and smoke detectors. When using radiant energy–sensing fire detectors, the designer must determine the spacing, location, and aiming of the detectors by considering two critical factors: the field of view of the detector and the sensitivity of the detector. See the definition of the term *field of view* in 3.3.106. Regarding the sensitivity of the detector, refer to the definition of the terms *flame detector sensitivity* and *spark/ember detector sensitivity* in 3.3.120 and 3.3.284, respectively.

System Design Tip

17.8.3.1 General Rules.

17.8.3.1.1* Radiant energy–sensing fire detectors shall be employed consistent with the listing or approval and the inverse square law, which defines the fire size versus distance curve for the detector.

A.17.8.3.1.1 All optical detectors respond according to the following theoretical equation:

$$S = \frac{kP^{-e\zeta d}}{d^2} \qquad \textbf{[A.17.8.3.1.1]}$$

where:

S = radiant power reaching the detector
k = proportionality constant for the detector
P = radiant power emitted by the fire
e = Naperian logarithm base (2.7183)
ζ = extinction coefficient of air
d = distance between the fire and the detector

The sensitivity (S) typically is measured in nanowatts. This equation yields a family of curves similar to the one shown in Figure A.17.8.3.1.1.

The curve defines the maximum distance at which the detector consistently detects a fire of defined size and fuel. Detectors should be employed only in the shaded area above the curve.

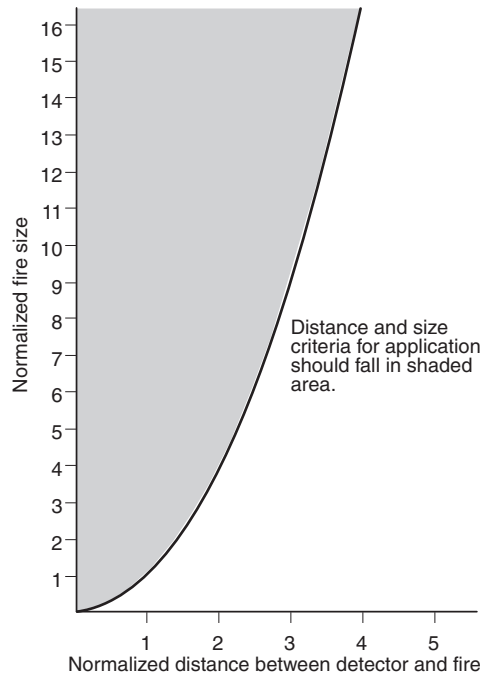

FIGURE A.17.8.3.1.1 *Normalized Fire Size vs. Distance.*

Under the best of conditions, with no atmospheric absorption, the radiant power reaching the detector is reduced by a factor of 4 if the distance between the detector and the fire is doubled. For the consumption of the atmospheric extinction, the exponential term zeta (ζ) is added to the equation. Zeta is a measure of the clarity of the air at the wavelength under consideration. Zeta is affected by humidity, dust, and any other contaminants in the air that are absorbent at the wavelength in question. Zeta generally has values between -0.001 and -0.1 for normal ambient air.

System Design Tip

The inverse square law modeled by the relationship shown in A.17.8.3.1.1 relates the size of the fire, the detector sensitivity, and the distance between the fire and the detector. Using the inverse square law enables the designer to compute with considerable precision how large the fire must be before enough radiant energy hits the detector to cause an alarm. These calculations are critical because they help determine the number of detectors of given sensitivity, location, and aiming that are necessary to detect a fire of given size. See the accompanying Closer Look feature for more on the inverse square law and its application.

17.8.3.1.2 Detector quantity shall be based on the detectors being positioned so that no point requiring detection in the hazard area is obstructed or outside the field of view of at least one detector.

A flame detector or spark/ember detector cannot detect what it cannot "see." The definition of the term *field of view* in 3.3.106 has a sensitivity criterion attached to it. Field of view is the angle off the optical axis of the detector where the effective sensitivity is at least 50 percent of the on-axis sensitivity.

All points where a fire can exist in the hazard area must be in the field of view of at least one detector, as required by 17.8.3.1.2. This requirement also effectively demands that the manufacturer provide sensitivity versus angle of incidence data in its engineering documentation.

Closer Look

The Inverse Square Law and Detector Sensitivity

The inverse square law applies to all radiant energy–sensing fire detectors. However, two tacit assumptions are made when the inverse square law is used for modeling the performance of flame detectors.

The first assumption is that the fire is small and far away from the detector. This permits modeling the fire as a point source. When the fire is modeled as a point source, all of the radiant power is thought of as emanating from a single point. The alternative would be to model the fire as a portion of the field of view. This alternative approach requires the use of advanced calculus and is far more difficult for the average designer.

The second assumption is that the flame is optically dense, meaning that radiation from the back side of the flame does not pass through the flame. Generally, because flame intermediates absorb radiation at the same wavelengths at which they emit radiation, this assumption holds true.

An important point to remember is that fire size is quantified in units of power output, either Btu per second or kilowatts, regardless of the type of radiant energy–sensing fire detector under consideration. Also the normally assumed 35 percent radiative fraction used in other fire calculations is not used when quantifying the power output of a fire in this context. The sensitivity of radiant energy–sensing fire detectors is derived from evaluations performed by the listing agency. The listing evaluations use the whole fire output as the metric.

Finally, for flame detectors, the numerical value of zeta (ζ) is determined by the set of wavelengths that were chosen for sensing and reference in the detector architecture and the atmospheric absorption at those wavelengths. The numerical value for ζ should be stated on the detector engineering and installation documentation. A design cannot be performed in accordance with this Code if the value of ζ for the detector is not provided. If the air is contaminated with vapors or gases not normally in the air, the value of ζ has probably changed. Consult the detector manufacturer for guidance. Refer to Section B.5 for the design process.

In the design of spark/ember detectors, the extinction factor, ζ, is the measure of the opacity of the fuel particulate at the detector operating wavelengths. The extinction relation is used to address the absorption of ember radiation by the nonburning fuel particles between the ember and the detector. In the spark/ember detection context, ζ is determined by the combustible.

System Design Tip

FAQ What is usually required when flame detectors are used to release extinguishing agents?

When flame detectors are used to initiate release of extinguishing agents, such as low-expansion foam, alarm signals from two or more detectors are usually required before the agent is released. Under those circumstances, the designer should apply 17.8.3.1.2 in a manner that requires all points in the hazard area where a fire can exist to be in the fields of view of the number of detectors required to discharge the extinguishing agent. Otherwise, the fire could occur in a portion of the hazard area that is in the field of view of only one detector, resulting in a delayed release of the extinguishing agent until the fire grows to a size sufficient to alarm the additional confirmation detector(s).

The requirements in 17.8.3.1.1 and 17.8.3.1.2 pertain to both flame detectors and spark/ember detectors. Other design considerations are more specific to one type of detector or the other. These considerations are addressed in 17.8.3.2 for flame detectors and 17.8.3.3 for spark/ember detectors, respectively.

System Design Tip

17.8.3.2 Spacing Considerations for Flame Detectors.

17.8.3.2.1* The location and spacing of detectors shall be the result of an engineering evaluation that includes the following:

(1) Size of the fire that is to be detected
(2) Fuel involved
(3) Sensitivity of the detector
(4) Field of view of the detector
(5) Distance between the fire and the detector
(6) Radiant energy absorption of the atmosphere
(7) Presence of extraneous sources of radiant emissions
(8) Purpose of the detection system
(9) Response time required

System Design Tip

The term *spacing* includes the number, location, and aiming of the detectors selected for the hazard area. In every system design using flame detectors, the location of each unit in the system must address the criteria listed. The criteria in 17.8.3.2.1 must be considered during the decision-making process the designer uses to select a flame detector and then apply it to a given location. The commentary following 17.8.3.2.2 provides additional insight into how the decision-making process is driven by the detector performance criteria and the anticipated fire and hazard environment.

Microcomputer-based multi-spectrum flame detectors are available that use a microcomputer to evaluate emissions from four or more different bands in the UV, visible, and IR regions. Exhibit 17.51 shows an example of a flame detector application.

A.17.8.3.2.1 The following are types of application for which flame detectors are suitable:

(1) High-ceiling, open-spaced buildings such as warehouses and aircraft hangars
(2) Outdoor or semioutdoor areas where winds or drafts can prevent smoke from reaching a heat or smoke detector
(3) Areas where rapidly developing flaming fires can occur, such as aircraft hangars, petrochemical production areas, storage and transfer areas, natural gas installations, paint shops, or solvent areas
(4) Areas needing high fire risk machinery or installations, often coupled with an automatic gas extinguishing system
(5) Environments that are unsuitable for other types of detectors

EXHIBIT 17.51

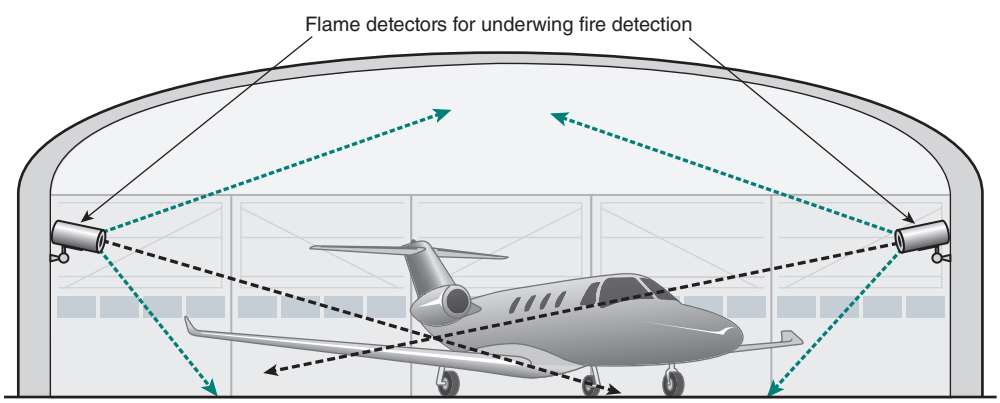

Application for Flame Detection.

Some extraneous sources of radiant emissions that have been identified as interfering with the stability of flame detectors include the following:

(1) Sunlight
(2) Lightning
(3) X-rays
(4) Gamma rays
(5) Cosmic rays
(6) Ultraviolet radiation from arc welding
(7) Electromagnetic interference (EMI, RFI)
(8) Hot objects
(9) Artificial lighting

A single detector type or model is unlikely to be susceptible to all or even most of the unwanted alarm sources listed in A.17.8.3.2.1. Different types and models of flame detectors exhibit different degrees of susceptibility to some of these sources.

17.8.3.2.2 The system design shall specify the size of the flaming fire of given fuel that is to be detected.

Because of the complexities inherent in the design of flame detection systems, a performance criterion must drive the design. The performance criterion is the detection of a fire of specified size and fuel.

Fire size is usually measured in Btu per second or in kilowatts, but more information is necessary in this context because flames are optically dense radiators. With optically dense radiators, the radiation from the back side of the flame does not travel through the flame toward the detector. Instead, the radiation is reabsorbed by the flame, and the flame detector "sees" only the profile of the fire, that is, its width and height. The flame height is proportional to the heat release rate (Btu per second or kilowatts). Both fire width and heat release rate are necessary to quantify the size of a fire.

Annex B outlines a detailed design method for flame detection systems. The design fire is specified and the fire flame height calculated. The radiating area of the fire is then calculated. Next, the radiant output of the fire is correlated to the sensitivity tests performed by a testing laboratory in the course of the listing evaluation. The correlated radiant density per unit of flame area is then assigned to the design fire, and the radiant output is calculated based on the radiant output per unit area times the radiating area of the fire. The design fire is then modeled as a point source radiator having the calculated radiant output. See Section B.5.

17.8.3.2.3* In applications where the fire to be detected could occur in an area not on the optical axis of the detector, the distance shall be reduced or detectors shall be added to compensate for the angular displacement of the fire in accordance with the manufacturer's published instructions.

A.17.8.3.2.3 The greater the angular displacement of the fire from the optical axis of the detector, the larger the fire must become before it is detected. This phenomenon establishes the field of view of the detector. Figure A.17.8.3.2.3 shows an example of the effective sensitivity versus angular displacement of a flame detector.

17.8.3.2.4* In applications in which the fire to be detected is of a fuel that differs from the test fuel used in the process of listing or approval, the distance between the detector and the fire shall be adjusted consistent with the fuel specificity of the detector as established by the manufacturer.

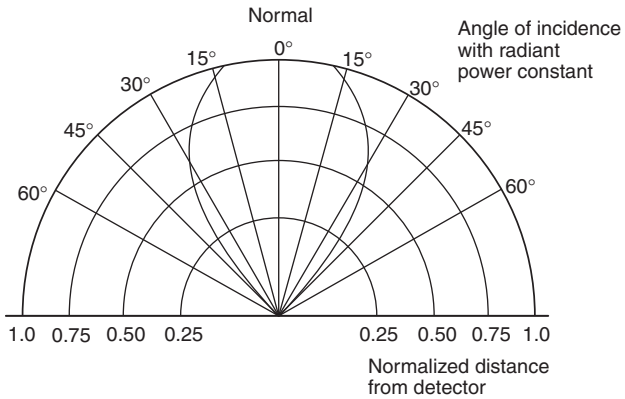

FIGURE A.17.8.3.2.3 *Normalized Sensitivity vs. Angular Displacement.*

A.17.8.3.2.4 Virtually all radiant energy–sensing detectors exhibit some kind of fuel specificity. If burned at uniform rates [W (J/sec)], different fuels emit different levels of radiant power in the ultraviolet, visible, and infrared portions of the spectrum. Under free-burn conditions, a fire of given surface area but of different fuels burns at different rates [W (J/sec)] and emits varying levels of radiation in each of the major portions of the spectrum. Most radiant energy detectors designed to detect flame are qualified on the basis of a defined fire under specific conditions. If employing these detectors for fuels other than the defined fire, the designer should make certain that the appropriate adjustments to the maximum distance between the detector and the fire are made consistent with the fuel specificity of the detector.

System Design Tip

In an effort to make flame detectors more sensitive and, at the same time, more immune to unwanted alarms, most detectors concentrate on very specific features of the flame spectrum. These features include the emissions of the flame across the range of wavelengths from UV to IR. In concept, such flame detectors infer that a flame exists if an emission of a specific wavelength or set of wavelengths is detected. However, one fuel emits a different radiant intensity at a given wavelength than another fuel. This characteristic gives rise to detectors that are fuel-specific. In some cases, a flame detector may be several times more sensitive to one fuel than to another.

FAQ What must the designer obtain to ensure the proper spacing of the detectors?

The designer must obtain flame spectra of potential fuels in the hazard area and response curves from the detector manufacturer to make certain the detector will respond to the fuel(s) involved. If the detector chosen for the system is less sensitive to one of the fuels in the hazard area, the spacing — along with the quantity, location, and aiming — of the detectors must be adjusted for the fuel to which the detector is least sensitive.

17.8.3.2.5 Because flame detectors are line-of-sight devices, their ability to respond to the required area of fire in the zone that is to be protected shall not be compromised by the presence of intervening structural members or other opaque objects or materials.

Some atmospheric contaminants, including vapors and gases, are absorptive at the wavelengths used by some flame detectors, which can have a significant effect on the performance of the system. See A.17.8.3.1.1 for the relationship of fire size and distance from a detector. The extinction coefficient,

ζ, is multiplied by the distance between the detector and the design fire to determine the portion of the emitted radiation that is lost in atmospheric absorption. The design calculations should state the expected concentrations of absorptive air contaminants and their collective effect on the value for ζ that is being used. Contaminants on detector windows can often adversely affect performance. Also, a window material that is clear in the visible portion of the spectrum might be opaque in either the UV or the IR portion of the spectrum. Common glass, for example, is virtually opaque in both UV and IR. Any window material that is not specifically listed for use with the detector in question may compromise the detector's response.

17.8.3.2.6* Provisions shall be made to sustain detector window clarity in applications where airborne particulates and aerosols coat the detector window between maintenance intervals and affect sensitivity.

A.17.8.3.2.6 This requirement has been satisfied by the following means:

(1) Lens clarity monitoring and cleaning where a contaminated lens signal is rendered
(2) Lens air purge

The need to clean detector windows can be reduced by the provision of air purge devices. These devices are not foolproof, however, and are not a replacement for regular inspection and testing. Radiant energy–sensing detectors should not be placed in protective housings (e.g., behind glass) to keep them clean, unless such housings are listed for the purpose. Some optical materials are absorptive at the wavelengths used by the detector.

17.8.3.3 Spacing Considerations for Spark/Ember Detectors.

17.8.3.3.1* The location and spacing of detectors shall be the result of an engineering evaluation that includes the following:

(1) Size of the spark or ember that is to be detected
(2) Fuel involved
(3) Sensitivity of the detector
(4) Field of view of the detector
(5) Distance between the fire and the detector
(6) Radiant energy absorption of the atmosphere
(7) Presence of extraneous sources of radiant emissions
(8) Purpose of the detection systems
(9) Response time required

A.17.8.3.3.1 Spark/ember detectors are installed primarily to detect sparks and embers that could, if allowed to continue to burn, precipitate a much larger fire or explosion. Spark/ember detectors are typically mounted on some form of duct or conveyor, monitoring the fuel as it passes by. Usually, it is necessary to enclose the portion of the conveyor where the detectors are located, as these devices generally require a dark environment. Extraneous sources of radiant emissions that have been identified as interfering with the stability of spark/ember detectors include the following:

(1) Ambient light
(2) Electromagnetic interference (EMI, RFI)
(3) Electrostatic discharge in the fuel stream

Spark/ember detectors are usually used on conveyance ducts and conveyors to detect embers in particulate solids as they are transported. Exhibit 17.52(a) shows the general concept of spark/ember

detection. Exhibit 17.52(b) illustrates the application of spark/ember detectors to protect a dust collector, and Exhibit 17.52(c) illustrates the protection of a conveyor.

Note that the detectors are located at a point along the duct or conveyor, monitoring the cross section of the duct or conveyor at that one point by essentially "looking across" the duct. Listed spark/ember detectors are designed to monitor a fuel stream as it moves past the detector. These detectors are not designed to "look down the duct." The capacitive nature of the circuitry of this type of detector generally makes it incapable of detecting a slowly growing radiator; the radiator must move past the detector rapidly if it is to be detected.

Annex B provides a more detailed design guide for spark detection system design.

17.8.3.3.2* The system design shall specify the size of the spark or ember of the given fuel that the detection system is to detect.

A.17.8.3.3.2 There is a minimum ignition power (watts) for all combustible dusts. If the spark or ember is incapable of delivering that quantity of power to the adjacent combustible material (dust), an expanding dust fire cannot occur. The minimum ignition power is determined by the fuel chemistry, fuel particle size, fuel concentration in air, and ambient conditions such as temperature and humidity.

System Design Tip

The size of an ember is measured in terms of watts, milliwatts, or microwatts. The radiant energy from an ember and the size of the ember cannot be accurately inferred from a description that states diameter and temperature only. See the definition of the term *spark/ember detector sensitivity* in 3.3.284. The equation for the inverse square law in A.17.8.3.1.1 cannot be used to calculate the ability of the detector to detect the ember in question unless both the detector sensitivity and the ember size are specified in the same terms of radiant power: watts, milliwatts, or microwatts.

Paragraph 17.8.3.3.2 is a performance-based design criterion that drives the entire system design. However, sparks are so close to actually being a point source radiator that calculating radiating area, as is done with flames, is not necessary. The radiant output of the spark is used directly.

The selected decision-making process brings the designer to this section on spark detection that is based on the analysis of the radiant characteristics of the combustible and environmental factors that apply to the hazard area. The hazard analysis begins with the determination of whether the combustible will burn in the solid phase as an ember or in the gas phase as a flame. That determination then points the designer toward the spark/ember detector (for solid-phase combustion) or the flame detector (for gas-phase combustion). The engineering documentation provided by the manufacturers of the various detectors under consideration should be used to determine the usefulness of a particular device for the hazard under consideration.

17.8.3.3.3 Spark detectors shall be positioned so that all points within the cross section of the conveyance duct, conveyor, or chute where the detectors are located are within the field of view *(as defined in 3.3.106)* of at least one detector.

FAQ How many detectors are needed to ensure proper coverage for each location on a pneumatic conveyance duct?

Most spark detection systems require a minimum of two detectors at each location on a pneumatic conveyance duct requiring detection. The need for this quantity of detectors is determined by the detector's field of view. Unless the field of view is 180 degrees, at least two detectors are needed to cover the inside of a duct. As the duct diameter increases, using that portion of the field of view where the detector is most sensitive is necessary to offset the absorption of the radiant emission from the spark by the nonburning material. Consequently, most spark detection systems require additional detectors as duct size increases.

EXHIBIT 17.52

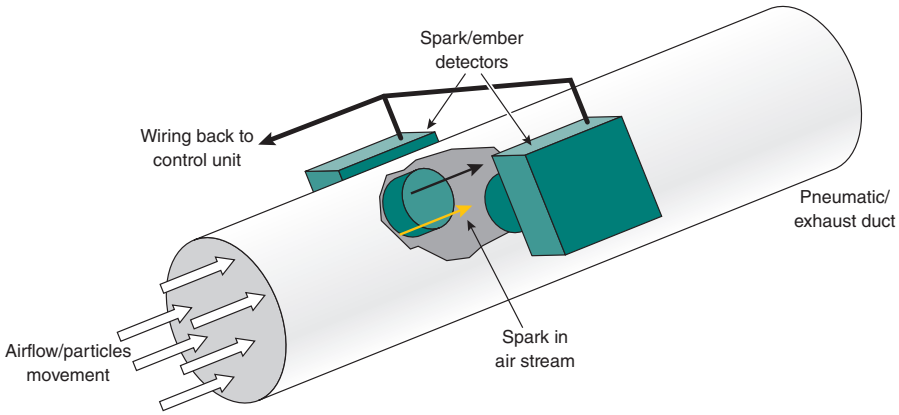

(a) Spark/ember detection concept

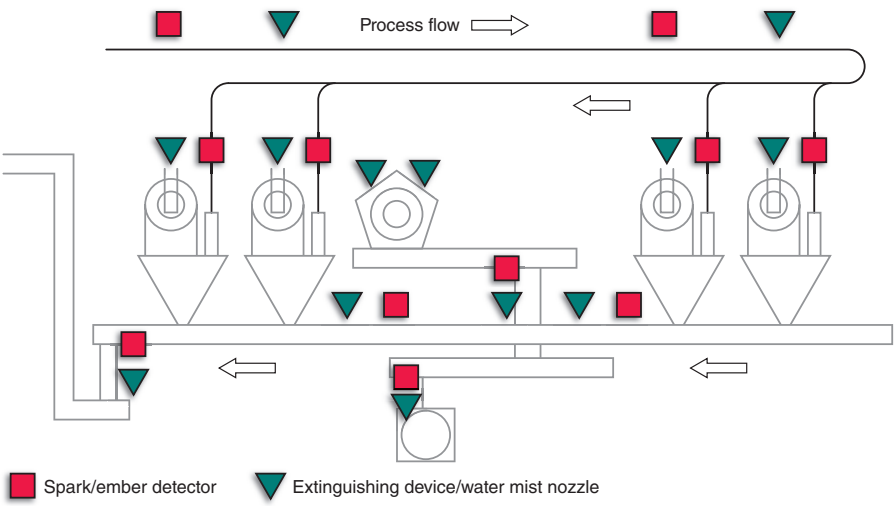

(b) Dust collector application

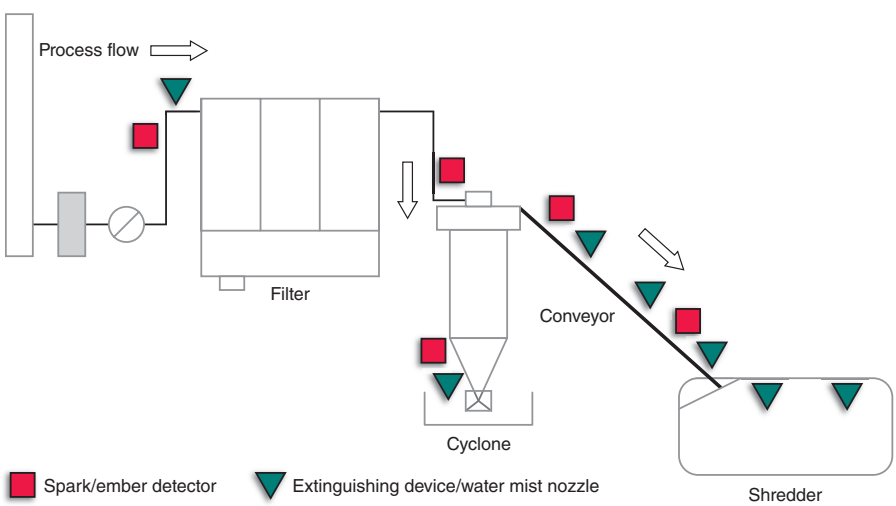

(c) Metal recycling application

Spark/Ember Detector Applications.

17.8.3.3.4* The location and spacing of the detectors shall be adjusted using the inverse square law, modified for the atmospheric absorption and the absorption of nonburning fuel suspended in the air in accordance with the manufacturer's published instructions.

A.17.8.3.3.4 As the distance between the fire and the detector increases, the radiant power reaching the detector decreases. Refer to A.17.8.3.1.1 for additional information.

The equation used for spark detection design is the same as that used for flame detection design. However, the atmospheric extinction coefficient, ζ (zeta), is determined by the optical absorbance of the nonburning material in the band of wavelengths used by the detector and by the concentration of the nonburning material per unit of air volume. The conservative design approach is to assume an emissivity (absorbance) of 1.0, which means that the material is 100 percent absorbent and does not reflect any radiation that strikes a nonburning fuel particle.

17.8.3.3.5* In applications where the sparks to be detected could occur in an area not on the optical axis of the detector, the distance shall be reduced or detectors shall be added to compensate for the angular displacement of the fire in accordance with the manufacturer's published instructions.

A.17.8.3.3.5 The greater the angular displacement of the fire from the optical axis of the detector, the larger the fire must become before it is detected. This phenomenon establishes the field of view of the detector. Figure A.17.8.3.2.3 shows an example of the effective sensitivity versus angular displacement of a flame detector.

17.8.3.3.6* Provisions shall be made to sustain the detector window clarity in applications where airborne particulates and aerosols coat the detector window and affect sensitivity.

A.17.8.3.3.6 This requirement has been satisfied by the following means:

(1) Lens clarity monitoring and cleaning where a contaminated lens signal is rendered
((2) Lens air purge

17.8.4 Other Considerations.

The requirements in 17.8.4 are intended to be applied to all radiant energy–sensing fire detectors, regardless of type.

17.8.4.1 Radiant energy–sensing detectors shall be protected either by design or installation to ensure that optical performance is not compromised.

System Design Tip

As radiant energy–sensing fire detectors are usually installed where they must endure the rigors of difficult industrial environments, the designer must consider the long-term impact of the environment on the optical performance of the detectors to ensure compliance with 17.8.4.1.

Many factors can affect the clear view of the hazard area or impede the required routine maintenance of detectors. For example, atmospheric contaminants can appear as opaque at detector operating wavelengths, structures can be modified after detector placement and aiming, and snow and ice can accumulate on either the detector or the adjacent structure, obscuring the field of view. Unless a detector has been specifically listed for use with a particular window material, the installation of a detector behind a protective window violates the operational characteristics as outlined in the listing of the detector. Most detectors employ windows made of optical material other than glass, selected for their transmittance in nonvisible portions of the spectrum. Glass does not permit either UV or mid-IR wavelengths to pass and would prevent most flame detectors from being effective.

17.8.4.2 If necessary, radiant energy–sensing detectors shall be shielded or otherwise arranged to prevent action from unwanted radiant energy.

In some cases, shielding a detector from radiant emissions coming from a portion of its field of view — where the sole source of radiant emissions is a spurious source — can be an effective way of dealing with the source of unwanted alarms. Many detectors are available with scoops or baffles to limit the field of view to a small portion of the total viewing area. Scoops or baffles provide the detector with the ability to operate in spite of an unwanted alarm source. When considering such methods, the designer should consult the manufacturer.

The designer should also keep in mind that reflected radiant emissions can also cause alarms. Not all surfaces are uniformly reflective at all wavelengths. Unwanted alarms are often traced to reflections from radiant sources that are outside the field of view of the detector.

System Design Tip

17.8.4.3 Where used in outdoor applications, radiant energy–sensing detectors shall be shielded or otherwise arranged in a fashion to prevent diminishing sensitivity by conditions such as rain or snow and yet allow a clear field of vision of the hazard area.

Both water and snow are highly absorptive in both the UV and IR portions of the spectrum. Where detectors are exposed to interference from streaming water or snow, their ability to respond to the design fire can be seriously compromised. Water can also initiate false alarms by causing the modulation of background radiant emissions, simulating the modulated emissions of a flame.

17.8.4.4 A radiant energy–sensing fire detector shall not be installed in a location where the ambient conditions are known to exceed the extremes for which the detector has been listed.

17.8.5 Video Image Flame Detection.

17.8.5.1 Video image flame detection systems and all of the components thereof, including hardware and software, shall be listed for the purpose of flame detection.

The organization providing the listing is responsible for evaluating the efficacy of the equipment and software for a defined scope of applications. Limits on the size of the monitored compartment versus the size of the fire that can be detected reliably, as well as limitations on the environment in the compartment necessary to allow reliable detection, have not been established.

17.8.5.2 Video image flame detection systems shall comply with all of the applicable requirements of Chapters 1, 10, 14, 17, and 23 of this Code.

A video image flame detection system consists of one or more video cameras, a signal router or interface, and a computer to analyze each video image frame in real time. Chapters 1, 10, 14, 17, and 23 each include requirements that apply to such a system. For example, because each of these components requires power, they must comply with the power supply criteria in Chapter 10. All the interconnections between cameras, interfaces, and computers must be monitored for integrity. All the components in the system must be listed for the purpose for which they are used. The alarm signal must be conveyed to the FACU via a circuit that is monitored for integrity. The requirements in Chapters 1, 10, 14, 17, and 23 address these and many other issues that are relevant to the video image flame detection system.

17.8.5.3* Video signals generated by cameras that are components of video image flame detection systems shall be permitted to be transmitted to other systems for other uses only through output connections provided specifically for that purpose by the video system manufacturer.

A.17.8.5.3 Facility owners and managers might desire to use cameras and their images for purposes other than flame detection. The intent of this paragraph is not to prohibit additional uses, but to ensure the integrity of the life safety flame detection mission of the equipment.

FAQ What types of applications are suitable for video image detection systems?

Video image flame detection systems are best suited for large open spaces with high-value assets that warrant such protection. In many cases, the facility security system includes cameras to monitor the space during unoccupied periods to maintain surveillance. There is little basis for two sets of cameras, one for flame detection and a second for surveillance. The video signal may be shared, provided that the equipment and the software that allow the sharing are listed for the purpose and that the security system does not interfere with the fire safety use of the signal.

Δ **17.8.5.4*** All component controls and software shall be protected from unauthorized changes.

A.17.8.5.4 Video image flame detection control and software should be protected from tampering by passwords, software keys, or other means of limiting access to authorized/qualified personnel. Component settings include any control or programming that might affect the operation of coverage of the detection. This includes, but is not limited to, camera focus, field of view, motion sensitivity settings, and change of camera position. Any changes in component settings or ambient conditions that affect the design performance of the detector should initiate a trouble signal.

Video image flame detection systems operate by comparing the view of the hazard area to earlier views of the hazard area and initiating alarm signals when the changes in groups of pixels are consistent with the presence of flame in the monitored space. Changes in camera position, focus, contrast setting, field of view, ambient lighting, and the criteria in the software for recognition of a flame all can affect the reliability of the system as a flame detection means. The system must be designed to provide protection against unauthorized changes that could affect the system's performance or reliability. Any intentional changes must be subject to the acceptance testing criteria in Chapter 14.

N **17.8.5.5** All changes to the software or component settings shall be tested in accordance with Chapter 14.

17.9 Combination, Multi-Criteria, and Multi-Sensor Detectors.

Δ **17.9.1 General.** The requirements for the selection, location, and spacing of combination, multi-criteria, and multi-sensor detectors shall comply with Section 17.9.

17.9.2 Combination Detectors.

17.9.2.1 A combination detector shall be listed for each sensor.

FAQ What is the reason for requiring that each sensor of a combination detector be listed?

Each of the sensors in the combination detector has the ability to operate alone, respond independently of the others, and initiate its own signal. (See 3.3.70.4.) Consequently, the individual detection devices in the combination detector must be listed as if they were stand-alone devices. For example, a combination smoke/heat detector would be listed as a smoke detector under ANSI/UL 268 and a heat detector under ANSI/UL 521.

17.9.2.2 The device listings shall determine the locations and spacing criteria in accordance with Chapter 17.

If the primary purpose of the detector is to provide life safety, the spacing should be based on the smoke detector spacing requirements in the Code. While the conventional spacing used for smoke detectors is 30 ft (9.1 m), 17.6.3.6 requires a spacing of at least 50 ft (15.2 m) for an integral heat sensor on a smoke detector. Historically, the heat detector was considered to be backup for the smoke detector if the smoke detector failed. However, if the generation of a heat detection signal relies on any of the electronic circuitry of the smoke detector, it could not serve a back-up function.

17.9.3 Multi-Criteria Detectors.

17.9.3.1 A multi-criteria detector shall be listed for the primary function of the device.

The term *multi-criteria detector* is defined in 3.3.70.12. While the detector uses multiple sensors to measure multiple criteria, it produces a single alarm signal. In most cases, these detection devices include either a photoelectric or ionization smoke sensor and a thermistor heat sensor, or they include all three sensors. These detection devices are usually listed under ANSI/UL 268 as smoke detectors. They can be designed as addressable/analog devices or as conventional (on/off) initiating devices.

17.9.3.2 Because of the device-specific, software-driven solution of multi-criteria detectors to reduce unwanted alarms and improve detector response to a nonspecific fire source, location and spacing criteria included with the detector installation instructions shall be followed.

If the unit is listed under ANSI/UL 268 as a smoke detector, it is to be located, spaced, and installed in accordance with Section 17.7.

17.9.4 Multi-Sensor Detectors.

17.9.4.1 A multi-sensor detector shall be listed for each sensor.

The term *multi-sensor detector* is defined in 3.3.70.13. In addition to using multiple criteria, these detectors can initiate an alarm signal as a result of any one of the sensors achieving its alarm threshold. These detectors can produce a number of alarm signals. In most cases, these detection devices include a combination of any of the following:

1. Photoelectric smoke sensor
2. Thermistor heat sensor
3. Ionization smoke sensor
4. CO sensor
5. Carbon dioxide sensor
6. Set of fire algorithms in a microcomputer that matches the detected levels to fire signatures in memory

If a multi-sensor detector uses an ionization chamber, a photoelectric chamber, a thermistor heat sensor, and a CO sensor to arrive at a single alarm signal, then it is listed as a single multi-criteria detector. However, if that same detector is capable of sending the individual signals to the FACU and the FACU can initiate an alarm on the basis of any one of those sensing means, then the multi-sensor detector is actually serving as a group of individual detectors and must be listed for each detection mode. These detectors are usually designed as addressable/analog devices, and the control unit often performs signature matching to generate the alarm signals.

17.9.4.2 Because of the device-specific, software-driven solution of multi-sensor detectors to reduce unwanted alarms and improve detector response to a nonspecific fire source, location and spacing criteria included with the detector installation instructions shall be followed.

17.10 Gas Detection.

Flammable gas and combustible vapor detection systems are required by numerous occupancy standards. If the fire safety of a particular occupancy relies on a flammable gas or combustible vapor detection system, then that system should be installed to the same level of reliability as the fire protection signaling system.

17.10.1 General. The purpose and scope of Section 17.10 shall be to provide requirements for the selection, installation, and operation of gas detectors other than carbon monoxide detectors.

CO detection is addressed in Section 17.12.

17.10.2 Gas Characteristics and Detector Selection.

17.10.2.1 Gas detection equipment shall be listed in accordance with applicable standards such as ANSI/UL 1484, *Standard for Residential Gas Detectors*, or ANSI/UL 2075, *Standard for Gas and Vapor Detectors and Sensors*, for the specific gas or vapor it is intended to detect.

Different sensing technologies are used for the detection of different gases. While most flammable hydrocarbon gases and combustible hydrocarbon vapors are detected using a catalytic bead technology, the catalyst varies, depending on the target gas to be detected. Some flammable gases are detected best with electrochemical sensors, while others are detected best with semiconductor sensors. Although there are some broad-spectrum flammable hydrocarbon gas sensors available on the market, their sensitivity and output vary considerably with the specific gas present. The gas detector and sensor must be carefully matched and calibrated to the specific gas to be detected. When a mixture of gases or vapors is present, the detector must be calibrated for that mixture.

Gas detectors generally do not have a fixed alarm threshold. Usually a gas detection system consists of a sensor placed where the gas is expected to be present and wired to a controller in a safe location. The controller has adjustable alarm thresholds, usually expressed as a percentage of the lower flammable limit, the lowest concentration of the gas in air that will propagate a flame. For a general review of gas and vapor detection systems and monitors, see Section 14, Chapter 8, of the *Fire Protection Handbook®*, 20th edition.

17.10.2.2 Any gas detection systems installed on a fire alarm system shall comply with all the applicable requirements of Chapters 1, 10, 14, 17, and 23 of this Code.

Fire losses have occurred that were ultimately traced back to the failure of a flammable gas or combustible vapor detection system. The referenced chapters establish the minimum compliance criteria for a gas detection system installed to provide part of the fire safety for a compartment of a building.

17.10.2.3 The requirements of this Code shall not apply to gas detection systems used solely for process control.

System Design Tip

Where the gas detection system is not providing a fire safety function but is limited only to process control, the requirements of this Code do not apply. The gas detection systems in those applications are designed by the persons responsible for the design of the process. The process designers are in the best position to know what is necessary to control that process. Once the presence of the gas or vapor detection system begins serving a fire safety function, the requirements of this Code apply.

The design of gas detection systems is inherently different from the design of smoke detection systems. In a smoke detection system, the fire produces a buoyant plume that forms a ceiling jet, and the fire sends the smoke to a predictable location — the ceiling. As a result, smoke detectors are installed on the ceiling in an array, the spacing of which is derived from a response time criterion. With a gas or vapor leak, there is not necessarily a buoyant plume. The gases or vapors are carried by the ambient air movement unless the difference in the density between the gases or vapors and the ambient air is substantial. A detailed engineering analysis of the ambient air in the compartments to be served by the gas detection system is necessary to determine where to locate the sensors. That analysis will include a three-dimensional map of the airflow currents under the entire range of operating scenarios to ensure that sensors are placed where the air currents will convey the gas or vapor to be detected.

17.10.2.4* The selection and placement of the gas detectors shall be based on an engineering evaluation.

A.17.10.2.4 The engineering evaluation should include, but is not limited to, the following:

(1) Structural features, size, and shape of the rooms and bays
(2) Occupancy and uses of areas
(3) Ceiling heights
(4) Ceiling shape, surface, and obstructions
(5) Ventilation
(6) Ambient environment
(7) Gas characteristics of the gases present
(8) Configuration of the contents in the area to be protected
(9) Response time(s)

17.11 Other Fire Detectors.

Section 17.11 establishes requirements, consistent with sound principles of fire protection engineering, for the application of new technologies or other fire detection methods that are not explicitly described in other sections of this chapter.

Δ **17.11.1** Detectors that operate on principles different from those covered by Sections 17.6 through 17.8 shall be classified as other fire detectors.

Chapter 14 outlines the required maintenance procedures and schedules for all components of a fire alarm system, including the initiating devices. Initiating devices covered by Section 17.11 must be maintained pursuant to Chapter 14 and the manufacturer's recommendations.

17.11.1.1 Such detectors shall be installed in all areas where they are required either by other NFPA codes and standards or by the authority having jurisdiction.

Δ **17.11.2*** Other fire detectors shall operate where subjected to the abnormal concentration of combustion effects that occur during a fire.

A.17.11.2 Examples of such combustion effects are water vapor, ionized molecules, or other phenomena for which they are designed. The performance characteristics of the detector and the area into which it is to be installed should be evaluated to minimize nuisance alarms or conditions that would interfere with operation.

17.11.3 Detection layout shall be based upon the size and intensity of fire to provide the necessary quantity of required products and related thermal lift, circulation, or diffusion for operation.

17.11.4 Room sizes and contours, airflow patterns, obstructions, and other characteristics of the protected hazard shall be taken into account.

17.11.5 Location and spacing of detectors shall comply with 17.11.5.1 through 17.11.5.3.

17.11.5.1 The location and spacing of detectors shall be based on the principle of operation and an engineering survey of the conditions anticipated in service.

17.11.5.1.1 The manufacturer's published instructions shall be consulted for recommended detector uses and locations.

17.11.5.2 Detectors shall not be spaced beyond their listed or approved maximums.

17.11.5.2.1 Closer spacing shall be used where the structural or other characteristics of the protected hazard warrant.

17.11.5.3 The location and sensitivity of the detectors shall be based on a documented engineering evaluation that includes the manufacturer's installation instructions and the following:

(1) Structural features, size, and shape of the rooms and bays
(2) Occupancy and uses of the area
(3) Ceiling height
(4) Ceiling shape, surface, and obstructions
(5) Ventilation
(6) Ambient environment
(7) Burning characteristics of the combustible materials present
(8) Configuration of the contents in the area to be protected

N 17.12 Carbon Monoxide Detectors.

NFPA 720

The incomplete combustion of fossil fuels results in the production of CO, an odorless, tasteless, toxic gas. CO poisoning occurs via respiration and can result from prolonged exposure to low levels of CO or shorter exposures to higher concentrations. Common fuel-fired appliances, machinery, and heating equipment, if not working or vented properly, can result in dangerous CO buildup. Possible sources of CO injuries and fatalities are as follows:

- Heating systems, cracked heat exchangers
- Charcoal grills or other charcoal sources
- Gas ranges, stoves, or ovens
- Camp stoves or lanterns

- Gas water heaters
- Blocked or clogged chimneys
- Gas or wood burning fireplaces
- Leaking, cracked, corroded, or disconnected flue or vent pipes
- Barbecue grills operated in enclosed areas, such as a garage
- Unvented gas space heaters

The concentration of CO, measured in parts per million (ppm), is a determining factor in the symptoms for an average, healthy adult:

- 50 ppm: No adverse effects with 8 hours of exposure
- 200 ppm: Mild headache after 2–3 hours of exposure
- 400 ppm: Headache and nausea after 1–2 hours of exposure
- 800 ppm: Headache, nausea, and dizziness after 45 minutes; collapse and unconsciousness after 2 hours of exposure
- 1,000 ppm: Loss of consciousness after 1 hour of exposure
- 1,600 ppm: Headache, nausea, and dizziness after 20 minutes of exposure
- 3,200 ppm: Headache, nausea, and dizziness after 5–10 minutes; collapse and unconsciousness after 30 minutes of exposure
- 6,400 ppm: Headache and dizziness after 1–2 minutes; unconsciousness and danger of death after 10–15 minutes of exposure
- 12,800 ppm: Immediate physiological effects, unconsciousness and danger of death after 1–3 minutes of exposure

N **17.12.1*** Where required by other governing laws, codes, or standards, carbon monoxide detectors shall be installed accordance with the following:

(1)* On the ceiling in the same room as permanently installed fuel-burning appliances, and
(2)* Centrally located on every habitable level and in every HVAC zone of the building, and
(3) Outside of each separate dwelling unit, guest room, and guest suite sleeping area within 21 ft (6.4 m) of any door to a sleeping room, with the distance measured along a path of travel, and
(4) Other locations where required by applicable laws, codes, or standards, or
(5) A performance-based design in accordance with Section 17.3

N **A.17.12.1(1)** Carbon monoxide detectors are located on the ceiling above permanently installed fuel-burning appliances because of the buoyancy of the heated combustion gases as compared to normal ambient temperatures. Detectors should be located as close as practical to the permanently installed fuel-burning appliance consistent with considerations of detector accessibility, sources of detector contamination, and nuisance sources. Siting considerations can include transient backdrafting spillage of flue gases during startup and ventilation supply or exhaust vents.

During the development of the 2019 edition, a major effort was undertaken to relocate the requirements of NFPA 720 into *NFPA 72*. Accordingly, requirements related to placement, product listing, and installation are now found in the new Section 17.12. Other chapters of *NFPA 72* address requirements related to notification, maintenance, testing, and systems provisions for CO alarms. These requirements apply when required by other codes and ordinances. It is noted that the designer has the choice of applying the prescribed requirements in Section 17.12 or, alternatively, the designer is permitted to use and apply a performance-based approach.

System Design Tip

The 2018 editions of NFPA *101* and *NFPA 5000®, Building Construction and Safety Code®*, require CO detection outside sleeping units in one- and two-family dwellings, rooming houses, hotels, dormitories apartment buildings, and kindergarten through grade 12 (K–12) schools. CO detection is required in these occupancies when they contain a permanently installed fuel-burning appliance or when they have a communicating attached garage. An open parking garage, as defined in the building code, or an enclosed parking garage that is ventilated in accordance with mechanical code requirements is not considered an attached garage. In addition to the sleeping area requirements, CO alarms or detectors are required to be installed in the non-sleeping areas of hotels, dormitories, and apartment buildings. A key location is on the ceiling in rooms containing a permanently installed fuel-burning appliance. An additional requirement is for detection to be centrally located within occupiable spaces served by the first supply air register from a fuel-burning HVAC system.

N **A.17.12.1(2)** The purpose of detectors centrally located on every habitable level is to detect the migration of carbon monoxide from permanently installed fuel-burning appliances and other sources of carbon monoxide. Other sources of carbon monoxide can include vehicles or other equipment that uses an internal combustion engine, barbecue grills, propane operated equipment, and systems used to generate hydrogen. Detector location and spacing should be based on an engineering evaluation that considers potential sources and migration of carbon monoxide. HVAC systems should be considered in the locating of carbon monoxide detectors because the HVAC systems provide a good means of mixing and the migration of carbon monoxide. Other considerations when locating carbon monoxide detectors are areas with closed doors and rated demising walls, which can isolate or separate areas within HVAC zones. Additional information for the location of carbon monoxide detectors is available in the Fire Protection Research Foundation (FPRF) technical report, "Development of a Technical Basis for Carbon Monoxide Detector Siting."

N **17.12.2** Carbon monoxide detectors shall meet the following requirements:

(1) Carbon monoxide detectors shall be listed in accordance with applicable standards, such as ANSI/UL 2075, *Gas and Vapor Detectors and Sensors*.
(2) Carbon monoxide detectors shall be set to respond to the sensitivity limits specified in ANSI/UL 2034, *Standard for Single and Multiple Station Carbon Monoxide Alarms*.

The alarm thresholds are the same for CO alarms in ANSI/UL 2034, *Standard for Single and Multiple Station Carbon Monoxide Alarms,* and CO detectors in ANSI/UL 2075, *Gas and Vapor Detectors and Sensors*. UL 2075 requires detectors to operate within the sensitivity parameters defined by UL 2034.

UL 2034 defines the alarm thresholds as follows:

- 30–69 ppm maintained for no fewer than 30 days
- 70–149 ppm maintained for 60 to 240 minutes
- 150–399 ppm maintained for 10 to 50 minutes
- 400 ppm or greater maintained for 4 to 15 minutes

Below 30 ppm, the detector is not permitted to give an alarm signal.

N **17.12.3** All carbon monoxide detectors shall be located and mounted so that accidental operation will not be caused by jarring or vibration.

N **17.12.4** The location of carbon monoxide detectors shall be based on an evaluation of potential ambient sources and flows of carbon monoxide, moisture, temperature, dust, or fumes and of electrical or mechanical influences to minimize nuisance alarms.

N **17.12.5** The selection and placement of carbon monoxide detectors shall take into account both the performance characteristics of the detector and the areas into which the detectors are to be installed to prevent nuisance and unintentional alarms or improper operation after installation.

N **17.12.6** Unless specifically designed and listed for the expected conditions, carbon monoxide detectors shall not be installed where any of the following ambient conditions exist:

(1) Temperature below 32°F (0°C)
(2) Temperature above 100°F (38°C)
(3) Relative humidity outside the range of 10 percent to 95 percent

N **17.12.7** Unless tested and listed for recessed mounting, carbon monoxide detectors shall not be recessed into the mounting surface.

N **17.12.8 Protection During Construction.**

N **17.12.8.1** Where detectors are installed for signal initiation during construction, they shall be replaced prior to the final commissioning of the system.

Manufacturers strive to design CO detectors to be as maintenance-free as possible; however, dust, dirt, and other particulate matter can invade a detector's sensing elements, affecting its sensitivity. Contaminated CO detectors can become more sensitive, which could cause unwanted alarms, or less sensitive, which could reduce the available time to react if CO reaches a dangerous level. Due to the likelihood of exposure to dust, dirt, and so on during construction, the best approach to avoiding sensitivity issues is to replace CO detectors that were used for CO detection during construction.

N **17.12.8.2** Where detection is not required during construction, detectors shall not be installed until after all other construction trades have completed cleanup.

N **17.12.9 Carbon Monoxide Detectors for Control of Carbon Monoxide Spread.**

N **17.12.9.1** System designers shall consider the spread of carbon monoxide through an occupancy through the HVAC system.

Where HVAC systems are in continuous use, the ventilation operation will stir the HVAC zone to create fairly uniform CO concentrations. In these circumstances, the installation of one CO detector per HVAC zone can be beneficial. However, some buildings do not use HVAC systems or use them only occasionally.

N **17.12.9.2** Interaction with smoke control systems, if such is provided, shall be coordinated.

17.13 Sprinkler Waterflow Alarm-Initiating Devices.

17.13.1* The provisions of Section 17.13 shall apply to devices that initiate an alarm indicating a flow of water in a sprinkler system.

A.17.13.1 Piping between the sprinkler system and a pressure actuated alarm-initiating device should be galvanized or of nonferrous metal or other approved corrosion-resistant material of not less than ⅜ in. (9.5 mm) nominal pipe size.

17.13.2* Activation of the initiating device shall occur within 90 seconds of waterflow at the alarm-initiating device when flow occurs that is equal to or greater than that from a single sprinkler of the smallest orifice size installed in the system.

EXHIBIT 17.53

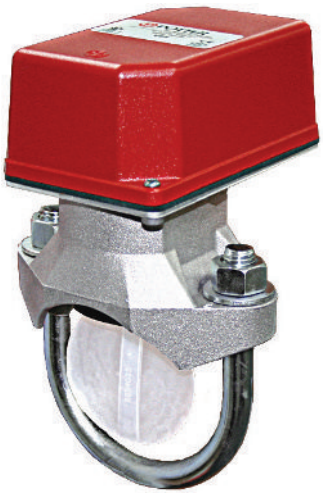

Vane-Type Waterflow Switch. (Source: Potter Electric Signal Company, LLC, St. Louis, MO)

EXHIBIT 17.54

High/Low-Pressure Supervisory Switch. (Source: Potter Electric Signal Company, LLC, St. Louis, MO)

The 90-second response criterion addresses only the time lag between the initial flow of water and the issuance of the electronic signal to the FACU by the switch. The criterion does not include any polling delays introduced by the FACU.

The water in a wet pipe automatic sprinkler system riser is not static; it moves upward and downward in the riser, depending on differences in pressure between the sprinkler system riser and the municipal water supply. Air trapped in the sprinkler system piping provides a compressible gas cushion, enhancing the tendency for flow to occur as a result of variance of pressures in the water supply system. The alarm check valve in the sprinkler system tends to slow down, but not eliminate, this flow. Consequently, the majority of sprinkler systems require a means to retard the initiation of a sprinkler waterflow signal to prevent the small flows that are the artifact of pressure variations from generating a waterflow alarm. The prevention of small flows is accomplished with a retarding device. This device can be part of the sprinkler system or it can be incorporated into the flow switch.

Some waterflow alarm–initiating devices are implemented as pressure switches installed on the wet pipe sprinkler system alarm trim, rather than with paddle- or vane-type switches on the riser itself. If a valve is installed in the connection between the sprinkler system and the waterflow initiating device, it must be supervised and transmit a supervisory signal if in the off-normal (full open) state. In general, pressure-type flow switches should not be installed on the top of a retard chamber because a valve is always located between the alarm check valve and the retard chamber, which is difficult, if not impossible, to supervise or lock open. Furthermore, unwanted alarms can occur if the retard chamber drain on the sprinkler system trim becomes clogged.

FAQ

What type of flow switch should be used in a dry pipe, preaction, or deluge-type system?

Due to their design, dry pipe, preaction, and deluge sprinkler systems do not suffer from the phenomenon of riser flow from pressure variations. However, these types of sprinkler systems should always be equipped with pressure-type flow switches rather than paddle- or vane-type flow switches. If a paddle- or vane-type flow switch is installed downstream in a dry pipe, preaction, or deluge-type system, the paddle or vane is likely to be damaged when the valve opens. See Exhibit 17.53 for an example of a vane-type waterflow switch and Exhibit 17.54 for an example of a high/low-pressure supervisory switch.

A.17.13.2 The waterflow device or the combination of the waterflow devices and fire alarm system should be field configurable so that an alarm is initiated no more than 90 seconds after a sustained flow of at least 10 gpm (40 L/min).

Features that should be investigated to minimize alarm response time include the following:

(1) Elimination of trapped air in the sprinkler system piping
(2) Use of an excess pressure pump
(3) Use of pressure drop alarm-initiating devices
(4) A combination thereof

Care should be used when choosing waterflow alarm-initiating devices for hydraulically calculated looped systems and those systems using small orifice sprinklers. Such systems might incorporate a single point flow of significantly less than 10 gpm (40 L/min). In such cases, additional waterflow alarm-initiating devices or the use of pressure drop-type waterflow alarm-initiating devices might be necessary.

Care should be used when choosing waterflow alarm-initiating devices for sprinkler systems that use on–off sprinklers to ensure that an alarm is initiated in the event of a

waterflow condition. On–off sprinklers open at a predetermined temperature and close when the temperature reaches a predetermined lower temperature. With certain types of fires, waterflow might occur in a series of short bursts of a duration of 10 seconds to 30 seconds each. An alarm-initiating device with retard might not detect waterflow under these conditions. An excess pressure system or a system that operates on pressure drop should be considered to facilitate waterflow detection on sprinkler systems that use on–off sprinklers.

Excess pressure systems can be used with or without alarm valves. The following is a description of one type of excess pressure system with an alarm valve.

An excess pressure system with an alarm valve consists of an excess pressure pump with pressure switches to control the operation of the pump. The inlet of the pump is connected to the supply side of the alarm valve, and the outlet is connected to the sprinkler system. The pump control pressure switch is of the differential type, maintaining the sprinkler system pressure above the main pressure by a constant amount. Another switch monitors low sprinkler system pressure to initiate a supervisory signal in the event of a failure of the pump or other malfunction. An additional pressure switch can be used to stop pump operation in the event of a deficiency in water supply. Another pressure switch is connected to the alarm outlet of the alarm valve to initiate a waterflow alarm signal when waterflow exists. This type of system also inherently prevents false alarms due to water surges. The sprinkler retard chamber should be eliminated to enhance the detection capability of the system for short duration flows.

System Design Tip

In many facilities, the sprinkler system is used as both a suppression system and a detection system. The flow of water initiates an alarm. In a large wet pipe system with large sprinkler risers, depending on the amount of trapped air, the flow from a single head has proved hard to detect. The air acts as a gas cushion, allowing pulsating variations in water pressure in the riser when a single head discharges. This action can prevent the vane of a vane-type waterflow switch from lifting — or the clapper of an alarm check valve from opening — long enough to overcome the pneumatic, electronic, or mechanical retard mechanism of the switch. (Rising and falling water supply pressure over the course of any 24-hour period causes the pressure entering the wet pipe sprinkler system to change. This pressure change can cause unwanted alarms. Most flow switches are equipped with a retard device that delays the transmission of a signal until after stable waterflow has been achieved.)

With pulsating flow in the riser, flow from one or two sprinkler heads can go undetected. The acceptance testing for systems with large risers should include flowing the system from the inspector's test connection at the most remote point on the sprinkler system to verify that the flow from a single head does, indeed, initiate an alarm signal within the maximum 90-second criterion. Often, exhausting the entrapped air in the sprinkler system is necessary to reduce this effect. If the sprinkler system uses on–off sprinklers, a waterflow alarm-initiating device must be used that can sense a possible flow of shorter duration. Meeting the 90-second criterion also can be a challenge with large systems using conventional sprinklers.

The designer must be familiar with NFPA 13. A very rapid alarm activation (less than 30 seconds) could create an increase in false activations caused by system pressure surges. Nuisance alarms caused by waterflow surges may be a concern and the waterflow signals could be set to alarm not sooner than 45 seconds after activation of a single sprinkler. Because buildings and sprinkler designs vary widely, a range of 0 to 90 seconds has been determined as reasonable for the variety of project conditions that might need to be addressed.

17.13.3 Movement of water due to waste, surges, or variable pressure shall not initiate an alarm signal.

17.14* Detection of Operation of Other Automatic Extinguishing Systems.

The operation of fire extinguishing systems or suppression systems shall initiate an alarm signal by alarm-initiating devices installed in accordance with their individual listings.

A.17.14 Alarm initiation can be accomplished by devices that detect the following:

(1) Flow of water in foam systems
(2) Pump activation
(3) Differential pressure
(4) Pressure (e.g., clean agent systems, carbon dioxide systems, and wet/dry chemical systems)
(5) Mechanical operation of a release mechanism

EXHIBIT 17.55

Emergency Manual Cable Release for Extinguishing Systems. (Source: Kidde-Fenwal, Ashland, MA)

System Design Tip

The operation of any automatic fire extinguishing system is a clear indication of a fire. Listed automatic fire extinguishing systems include electric switching devices that are intended to be used to transmit a fire alarm signal to the building fire alarm system.

FAQ What are usual means to signal operation of the extinguishing system?

Discharge pressure switches or actuation mechanism microswitches are the usual means of providing the extinguishing system operation signal to the FACU. Due to the critical function these switches perform, they must be listed for use with the specific make and model of extinguishing system. The connection of a listed extinguishing agent release initiating device to an appropriate IDC on the FACU, consistent with the listings of both the unit and the initiating device, is crucial for the successful operation of most special extinguishing systems.

Many extinguishing systems include emergency mechanical manual release capability. This feature provides for the release of the extinguishing agent, bypassing the operation of the fire detection system that is used to actuate the extinguishing system. Functions that are normally accomplished by means of electrical switching in the extinguishing system control panel — including shutdown of local HVAC, actuation of HVAC dampers, closing of doors, interruption of production equipment, and shutoff of fuel flow — must also occur when the mechanical manual release is used. See Exhibit 17.55 for an example of a manual agent release device.

The designer should review the manufacturer's instructions and the following standards, as applicable, for more information on alarm initiation requirements unique to the type of extinguishing system:

NFPA 11, *Standard for Low-, Medium-, and High-Expansion Foam*
NFPA 12, *Standard on Carbon Dioxide Extinguishing Systems*
NFPA 12A, *Standard on Halon 1301 Fire Extinguishing Systems*
NFPA 15, *Standard for Water Spray Fixed Systems for Fire Protection*
NFPA 16, *Standard for the Installation of Foam-Water Sprinkler and Foam-Water Spray Systems*
NFPA 17, *Standard for Dry Chemical Extinguishing Systems*
NFPA 17A, *Standard for Wet Chemical Extinguishing Systems*
NFPA 750, *Standard on Water Mist Fire Protection Systems*
NFPA 2001, *Standard on Clean Agent Fire Extinguishing Systems*
NFPA 2010, *Standard for Fixed Aerosol Fire-Extinguishing Systems*

17.15 Manually Actuated Alarm-Initiating Devices.

Many buildings have fire alarm systems that are not equipped for automatic off-site signal transmission to a supervising station. In such buildings, activation of a manual fire alarm box only notifies other building occupants of the presence of a fire — it does not notify the fire service. Explicit instructions to the operator of the manual fire alarm box to also notify the fire department from outside the building are desirable and might be required by local ordinance or code to be placed at each manual fire alarm box location.

17.15.1 Manually actuated alarm-initiating devices shall be listed in accordance with applicable standards such as ANSI/UL 38, *Standard for Manual Signaling Boxes for Fire Alarm Systems*.

N **17.15.2** Manually actuated alarm-initiating devices for initiating signals other than for fire alarm shall be permitted if the devices are differentiated from manual fire alarm boxes by a color other than red and labeling.

The color red is reserved for manual initiating devices that initiate a fire signal. If manual initiating devices are used to initiate some other emergency signal (e.g., toxic release, radiological release, medical emergency, hazardous weather), they must be differentiated from each other and from the fire alarm boxes by both color and labeling. No color code is specified for manual emergency reporting–initiating devices.

17.15.3 Combination manual fire alarm boxes and guard's signaling stations shall be permitted.

If a manual fire alarm box is incorporated into some other manually operated non-fire-related assembly (with the single exception of guards' tour supervisory stations), the probability of unwarranted operation is increased. This arrangement leads to unwanted alarms and erodes the occupants' confidence in the system. Also, when manual fire alarms are combined with non-fire-related functions, the probability that a failure in the non-fire-related function will compromise the fire alarm system increases.

17.15.4 Manually actuated alarm-initiating devices shall be securely mounted.

17.15.5 Manually actuated alarm-initiating devices shall be mounted on a background of contrasting color.

17.15.6 The operable part of a manually actuated alarm-initiating device shall be not less than 42 in. (1.07 m) and not more than 48 in. (1.22 m) from the finished floor.

The *Americans with Disabilities Act and Architectural Barriers Act Accessibility Guidelines* (July 23, 2004; as amended through May 7, 2014) specifies a maximum height of 48 in. (1220 mm) for an unobstructed forward or side reach. Refer to the specific details of the guidelines for what constitutes obstructed versus unobstructed approach. Information concerning the policies of the Architectural and Transportation Barriers Compliance Board is available at www.access-board.gov. See Exhibit 17.56 for an example of a manual fire alarm box.

EXHIBIT 17.56

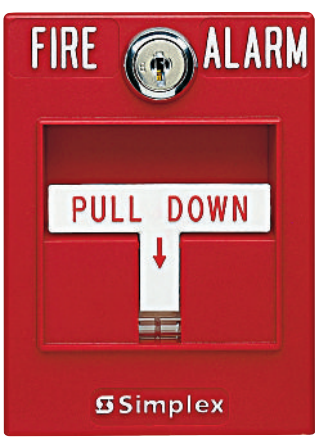

Manual Fire Alarm Box. (Source: Johnson Controls, Westminster, MA)

17.15.7 Manually actuated alarm-initiating devices shall be permitted to be single action or double action.

17.15.8* Listed protective covers shall be permitted to be installed over single- or double-action manually actuated alarm-initiating devices.

A.17.15.8 Protective covers, also called pull station protectors can be installed over manually actuated alarm initiating devices to provide mechanical protection, environmental protection, and to reduce the likelihood of accidental or malicious activation. The protective covers must be listed to ensure that they do not hinder the operation of the pull stations and to ensure that they meet accessibility requirements for activation by persons with physical disabilities. The Code explicitly permits installing them over single- or double-action devices. When installed over a double-action device, the assembly effectively becomes a triple-action device. Some units include battery-operated audible warning signals that have been shown to deter malicious activations. To be effective, it is important that the regular staff or occupants be aware of the sound and investigate immediately in order to catch someone who might otherwise actuate the device without cause or to ensure that the device is actuated if there is a legitimate reason.

In locations where an audible signal is incorporated into the protective cover, users should be aware that opening the cover does not initiate a fire alarm signal; the fire alarm box must still be actuated to initiate the alarm.

See Exhibit 17.57 for an example of a manual fire alarm box protective cover.

EXHIBIT 17.57

Protective Cover for Manual Fire Alarm Box. (Source: Safety Technology International, Inc., Waterford, MI)

17.15.9 Manual fire alarm boxes shall comply with 17.15.9.1 through 17.15.9.6.

17.15.9.1 Manual fire alarm boxes shall be used only for fire alarm initiating purposes.

If manual fire alarm boxes are used for some other purpose, such as for the actuation of a special extinguishing system, then someone unfamiliar with the facility could actuate the wrong manual fire alarm box in response to a fire incident. Consequently, manual fire alarm boxes are permitted to be used only for initiation of a fire alarm signal. A manual alarm-initiating device other than a manual fire alarm–initiation device must be used for those other purposes. This requirement limits the potential for occupant confusion during a fire.

When manual alarm-initiating devices are installed to initiate another type of emergency response, such as for toxic release or spill, the manual alarm-initiating device should be different from those used to report a fire to minimize the probability of confusion during an emergency. Refer to Chapter 24 for guidance on manual initiation devices used for mass notification systems.

17.15.9.2 Manual fire alarm boxes shall be installed so that they are conspicuous, unobstructed, and accessible.

The objective is to ensure that, as occupants leave the building, they can easily see manual fire alarm–initiating devices without searching. Each manual fire alarm box must be clearly identifiable from a distance. Decorative items or furnishings that are in front of or adjacent to manual fire alarm boxes can hinder a person from locating and operating the manual fire alarm box as that person proceeds to the means of egress. The authority having jurisdiction determines if the manual fire alarm–initiating devices are sufficiently conspicuous, unobstructed, and accessible.

17.15.9.3* Unless installed in an environment that precludes the use of red paint or red plastic, manual fire alarm boxes shall be red in color.

A.17.15.9.3 In environments where red paint or red plastic is not suitable, an alternative material, such as stainless steel, could be used as long as the box meets the requirements of 17.15.9.2.

17.15.9.4 Manual fire alarm boxes shall be located within 5 ft (1.5 m) of each exit doorway on each floor.

The purpose of locating the manual fire alarm box within 5 ft (1.5 m) of the exit doorway on each floor is to have the location consistent with the path of travel that occupants will use during an evacuation. As occupants approach the door leading to a means of egress, a manual fire alarm box (if required) should be close to that door. Review of NFPA *101* or the locally adopted building code and discussion with the authority having jurisdiction are recommended to determine which doors are considered to be exit doorways for this purpose. In general, doors that serve as access to an exit passageway or a horizontal exit or that provide direct access to the exterior from a grade floor are normally considered exit doors. The discharge door from a stairway is not usually considered an exit doorway.

17.15.9.5* Additional manual fire alarm boxes shall be provided so that the travel distance to the nearest manual fire alarm box will not exceed 200 ft (61 m), measured horizontally on the same floor.

A.17.15.9.5 It is not the intent of 17.15.9.5 to require manual fire alarm boxes to be attached to movable partitions or to equipment, nor to require the installation of permanent structures for mounting purposes only.

This criterion is derived from the requirements established in NFPA *101*.

17.15.9.6 Manual fire alarm boxes shall be mounted on both sides of grouped openings over 40 ft (12.2 m) in width, and within 5 ft (1.5 m) of each side of the grouped opening.

FAQ

What is the reason for requiring manual fire alarm boxes on both sides of grouped openings?

The objective is to provide a manual fire alarm box in easy reach in the normal exit path of the occupants. When multi-leaf door sets are installed, the exit doorway can become wide enough that the departing occupant might not notice the fire alarm box on the far side of a wide set of doors. Also, the occupant might have to cross the doors to activate the manual fire alarm box, which would delay departure. Consequently, when door sets attain 40 ft (12.2 m) in width, fire alarm boxes are required on both sides of the means of egress. The number and the location of the manual fire alarm boxes required for multi-leaf doors should be consistent where there are groups of exit doors. See Exhibit 17.58 for an example of the application of 17.15.9.6 to manual fire alarm boxes at grouped openings.

EXHIBIT 17.58

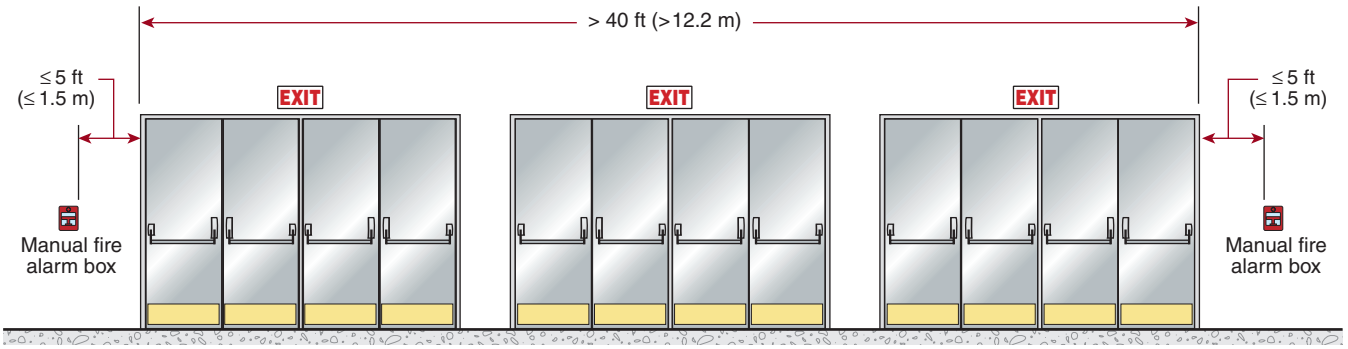

Locations of Manual Fire Alarm Boxes at Grouped Openings.

17.16 Fire Extinguisher Electronic Monitoring Device.

A fire extinguisher electronic monitoring device shall indicate those conditions for a specific fire extinguisher required by NFPA 10 to a fire alarm control unit or other control unit.

This section does not require that fire extinguisher monitoring devices be provided. If and where fire extinguisher electronic monitoring devices are provided, they must monitor those conditions required by the inspection criteria of NFPA 10, *Standard for Portable Fire Extinguishers*. The signals provided to the FACU or other control unit are intended to serve in place of the regular, routine inspection of fire extinguishers as required by NFPA 10, and an off-normal condition should initiate a supervisory signal at the control unit, as permitted by 23.8.4.10. See Exhibit 17.59 for an example of a fire extinguisher monitoring device.

EXHIBIT 17.59

Fire Extinguisher Monitored by Fire Extinguisher Monitoring Device. (Source: en-Gauge, Inc., Rockland, MA)

17.17 Supervisory Signal–Initiating Devices.

17.17.1 Control Valve Supervisory Signal–Initiating Device.

Control valve supervisory signal–initiating devices are switches designed and listed for service as valve-monitoring devices. See Exhibit 17.60 for an example of a valve supervisory switch.

17.17.1.1 Two separate and distinct signals shall be initiated: one indicating movement of the valve from its normal position (off-normal), and the other indicating restoration of the valve to its normal position.

17.17.1.2 The off-normal signal shall be initiated during the first two revolutions of the hand-wheel or during one-fifth of the travel distance of the valve control apparatus from its normal position.

17.17.1.3 The off-normal signal shall not be restored at any valve position except normal.

The requirement for two distinct signals does not necessarily mean two switches. A switch that transfers when the valve begins to close and stays transferred while the valve remains closed, then returns to normal when the valve is reopened, satisfies the requirement. The initial transfer is the first signal, as defined in 17.17.1.2, and the return to normal is the second signal, as defined in 17.17.1.3.

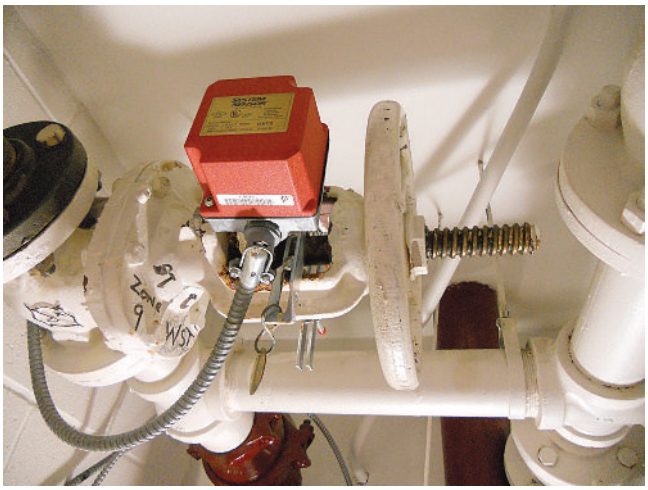

EXHIBIT 17.60

Outside Screw and Yoke (OS&Y) Valve Supervisory Switch.

For example, assume the switch on the valve is a normally open contact. As the operator begins to turn the valve, the switch closes, indicating an off-normal condition. The switch stays in the closed, off-normal position as the operator continues to close the valve. When the operator reopens the valve, the closed contact transfers back to the open state only when the valve is completely open. This arrangement ensures that a supervisory signal is initiated any time the valve obstructs the free flow of water or extinguishing agent through the valve. Additional friction losses from a partially closed valve can have a significant impact on the system's ability to fight a fire.

17.17.1.4 An initiating device for supervising the position of a control valve shall not interfere with the operation of the valve, obstruct the view of its indicator, or prevent access for valve maintenance.

17.17.2 Pressure Supervisory Signal–Initiating Device.

17.17.2.1 Two separate and distinct signals shall be initiated: one indicating that the required pressure has increased or decreased (off-normal), and the other indicating restoration of the pressure to its normal value.

The requirement for two distinct signals does not necessarily mean two switches. A switch that transfers when the pressure is outside the allowable limit then restores when the pressure is returned to normal satisfies the requirement. The initial transfer is the first signal, and the return to normal is the second signal. Exhibit 17.61 shows an example of a pressure supervisory switch.

EXHIBIT 17.61

Pressure Supervisory Switch. (Source: Potter Electric Signal Company, LLC, St. Louis, MO)

17.17.2.2 The requirements in 17.17.2.2.1 through 17.17.2.2.4 shall apply to pressure supervisory signal–initiating devices.

17.17.2.2.1 Pressure Tank.

(A) A pressure tank supervisory signal–initiating device for a pressurized limited water supply, such as a pressure tank, shall indicate both high- and low-pressure conditions.

(B) The off-normal signal shall be initiated when the required pressure increases or decreases by 10 psi (70 kPa).

The switch set points in 17.17.2.2.1(B) correlate with the requirements of NFPA 22, *Standard for Water Tanks for Private Fire Protection*. That standard requires all pressure tanks used for fire protection to be provided with a means for installing the pressure sensor(s), but it does not require the installation of the sensors. Unless the owner or another standard requires electronic monitoring, it is permissible to manually monitor the pressure with a pressure gauge.

17.17.2.2.2* Dry Pipe Sprinkler System.

(A) A pressure supervisory signal–initiating device for a dry-pipe sprinkler system shall indicate both high- and low-pressure conditions.

(B) For dry pipe valves, the off-normal signal shall be initiated when the pressure increases or decreases by 10 psi (70 kPa).

The supervisory signal should be permitted to initiate when passing +/– 10 psi (70 kPa) of the normal value. For example, if the normal system air pressure is 40 psi (275 kPa), the switch must give a low signal when the pressure decays below 30 psi (205 kPa) and must give a high signal when the pressure rises above 50 psi (345 kPa). A tighter tolerance of +/– 5 psi (35 kPa) would be acceptable, provided the air pressure in the system is reliably stable, such that nuisance signals are not initiated. However, using a supervisory setting at the maximum permitted tolerance is best to avoid nuisance signals.

When the dry pipe sprinkler system air pressure decreases, it is important that the air pressure does not drop more than 10 psi (70 kPa) because the dry valve could be more susceptible to opening inadvertently. Paragraph 7.2.6.7 of NFPA 13 requires the normal dry pipe air pressure to be maintained at 20 psi (140 kPa) above the valve trip pressure. If the pressure drops by 10 psi (70 kPa), the safety margin will be cut in half. In some cases, a smaller margin may be specified by the valve manufacturer's instructions.

When the dry pipe sprinkler system air pressure increases, it is important that the air pressure does not increase more than 10 psi (70 kPa) because the additional pressure could take longer to vent when a sprinkler opens. This would further delay the delivery of water to the sprinkler.

N **(C)** For low air pressure dry pipe valves, the high- and low-pressure values shall be set in accordance with the manufacturer's installation instructions.

N **A.17.17.2.2.2** Some dry pipe systems use lower air pressures in the range of 8 psi to 15 psi (0.5 bar to 1.0 bar), instead of the traditional 40 psi (2.7 bar). A plus or minus value of 10 psi (0.7 bar) is not appropriate for these systems and could result in dry pipe valve actuation prior to transmission of a low air pressure supervisory signal.

The settings for air pressure supervision for low differential dry valves depend on the valve design, and it is important to consult the manufacturer's installation instructions.

17.17.2.2.3 Steam Pressure.

(A) A steam pressure supervisory signal–initiating device shall indicate a low pressure condition.

(B) The off-normal signal shall be initiated prior to the pressure falling below 110 percent of the minimum operating pressure of the steam-operated equipment supplied.

17.17.2.2.4 Other Sources. An initiating device for supervising the pressure of sources other than those specified in 17.17.2.2.1 through 17.17.2.2.3 shall be provided as required by the authority having jurisdiction.

Some fire-extinguishing systems, such as clean agent or dry chemical systems, use pressurized containers to deliver the extinguishing agent to the protected space. An installation might include a supervisory

pressure switch to indicate the loss of pressure from the container. Because pressure can change with temperature, the switches are typically designed to give a signal only when the pressure drops below the minimum pressure that corresponds to the minimum temperature for which the system is listed. Under these circumstances, a low-pressure signal might indicate the presence of a leak.

17.17.3 Water Level Supervisory Signal–Initiating Device.

17.17.3.1 Two separate and distinct signals shall be initiated: one indicating that the required water level has been lowered or raised (off-normal), and the other indicating restoration.

The requirement for two distinct signals does not necessarily mean two switches. A switch that transfers when the water level is outside the allowable limit then restores when the level is returned to normal satisfies the requirement. The initial transfer is the first signal, and the return to normal is the second signal.

The switch set points in 17.17.3.2 and 17.17.3.3 correlate with the requirements of NFPA 22. That standard requires fire protection water tanks to be provided with a means for installing the water level sensor(s), but it does not require the installation of the sensors. Unless the owner or another standard requires electronic monitoring, it is permissible to manually monitor the water level with a water-level gauge.

See Exhibit 17.62 for an example of a tank water level supervisory switch, and Exhibit 17.63 for an example of a typical water tank.

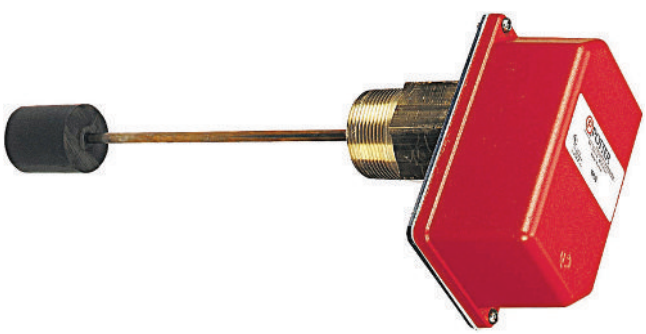

EXHIBIT 17.62

Tank Water Level Supervisory Switch. (Source: Potter Electric Signal Company, LLC, St. Louis, MO)

EXHIBIT 17.63

Typical Water Tank.

EXHIBIT 17.64

Tank Water Temperature Supervisory Switch. (Source: Potter Electric Signal Company, LLC, St. Louis, MO)

EXHIBIT 17.65

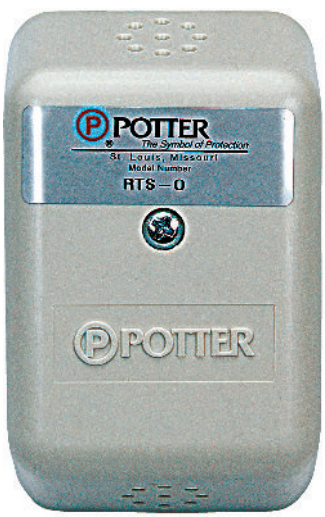

Room Temperature Supervisory Switch. (Source: Potter Electric Signal Company, LLC, St. Louis, MO)

17.17.3.2 A pressure tank signal-initiating device shall indicate both high and low water level conditions.

17.17.3.2.1 The off-normal signal shall be initiated when the water level falls 3 in. (76 mm) or rises 3 in. (76 mm).

17.17.3.3 A supervisory signal–initiating device for other than pressure tanks shall initiate a low water level signal when the water level falls 12 in. (300 mm).

17.17.4 Water Temperature Supervisory Signal–Initiating Device.

17.17.4.1 A temperature supervisory device for a water storage container exposed to freezing conditions shall initiate two separate and distinctive signals, as specified in 17.17.4.2.

The requirement for two distinct signals does not necessarily mean two switches. A switch that transfers when the water temperature is outside the allowable limit then restores when the temperature is returned to normal satisfies the requirement. The initial transfer is the first signal, and the return to normal is the second signal.

The switch set points in 17.17.4.2 correlate with the requirements of NFPA 22. That standard requires all fire protection water tanks to be provided with a means for installing the water temperature sensor(s). However, a low temperature alarm is required only where the tank is subject to freezing. In such cases, a heating system might be installed to maintain the water temperature above 42°F (5.6°C) in the coldest weather, so the alarm set point of 40°F (4.4°C) might indicate a failure of the heating system to meet this objective.

Exhibit 17.64 shows an example of a tank water temperature supervisory switch.

17.17.4.2 One signal shall indicate a decrease in water temperature to 40°F (4.4°C), and the other shall indicate its restoration to above 40°F (4.4°C).

17.17.5 Room Temperature Supervisory Signal–Initiating Device. A room temperature supervisory device shall indicate a decrease in room temperature to 40°F (4.4°C) and its restoration to above 40°F (4.4°C).

The requirement for two distinct signals does not necessarily mean two switches. A switch that transfers when the room temperature is beyond a set limit then restores when the temperature is returned to normal satisfies the requirement. The initial transfer is the first signal, and the return to normal is the second signal.

Automatic sprinkler systems are designed to operate at or above 40°F (4.4°C), except where special provisions are made. A room temperature monitor can be used to indicate a failure of the heating system in a room containing a fire pump or other system components.

Exhibit 17.65 shows an example of a room temperature supervisory switch.

References Cited in Commentary

Alpert, R., "Ceiling Jets," *Fire Technology,* August 1972.

Americans with Disabilities Act and Architectural Barriers Act Accessibility Guidelines, July 23, 2004, as amended through May 7, 2014, United States Access Board, Washington, DC.

ANSI/UL 268, *Standard for Smoke Detectors for Fire Alarm Systems*, Underwriters Laboratories Inc., Northbrook, IL, 2009.

ANSI/UL 521, *Standard for Heat Detectors for Fire Protective Signaling Systems*, Underwriters Laboratories Inc., Northbrook, IL, 1999.

ANSI/UL 2034, *Standard for Single and Multiple Station Carbon Monoxide Alarms*, Underwriters Laboratories Inc., Northbrook, IL, 2008, revised 2009.

ANSI/UL 2075, *Gas and Vapor Detectors and Sensors*, Underwriters Laboratories Inc., Northbrook, IL, 2013.

Babrauskas, V., Lawson, J. R., Walton, W. D., and Twilley, W. H., "Upholstered Furniture Heat Release Rates Measured with a Furniture Calorimeter," NBSIR 82-2604, December, National Institute of Standards and Technology, Center for Fire Research, Gaithersburg, MD, 1982.

Fire Protection Handbook®, 20th edition, National Fire Protection Association, Quincy, MA, 2008.

Fire Protection Research Foundation, International Fire Detection Research Project, Technical Report (Years 1, 2, 3, and 4), National Fire Protection Association, Quincy, MA, 1993–1998.

Fire Protection Research Foundation, "Smoke Detector Performance for Level Ceilings with Deep Beams and Deep Pocket Configurations Research Project," National Fire Protection Association, Quincy, MA, April 2006.

FM Approval Standard 3210, *Heat Detectors for Automatic Fire Alarm Signaling*, FM Global, Norwood, MA, 2007.

Heskestad, G., "Characterization of Smoke Entry and Response for Products-of-Combustion Detectors," Proceedings of the 7th International Conference on Problems of Automatic Fire Detection, Rheinisch-Westfälischen Technischen Hochschule Aachen, March 1975.

Heskestad, G., and Delichatsios, M. A., "Environments of Fire Detectors — Phase 1: Effect of Fire Size, Ceiling Height and Material," *Measurements* vol. I (NBS-GCR-77-86), *Analysis* vol. II (NBS-GCR-77-95), National Technical Information Service (NTIS), Springfield, VA, 1986, 1995.

Heskestad, G., and Delichatsios, M. A., "Update: The Initial Convective Flow in Fire," *Fire Safety Journal*, vol. 15(5), 1989.

Morton, B. R., Taylor, G., and Turner, J. S., "Turbulent Gravitational Convection from Maintained and Instantaneous Sources," *Proc. Royal Society A,* 234:1–23, 1956.

NFPA 10, *Standard for Portable Fire Extinguishers*, 2018 edition, National Fire Protection Association, Quincy, MA.

NFPA 11, *Standard for Low-, Medium-, and High-Expansion Foam*, 2016 edition, National Fire Protection Association, Quincy, MA.

NFPA 12, *Standard on Carbon Dioxide Extinguishing Systems*, 2018 edition, National Fire Protection Association, Quincy, MA.

NFPA 12A, *Standard on Halon 1301 Fire Extinguishing Systems*, 2018 edition, National Fire Protection Association, Quincy, MA.

NFPA 13, *Standard for the Installation of Sprinkler Systems*, 2019 edition, National Fire Protection Association, Quincy, MA.

NFPA 15, *Standard for Water Spray Fixed Systems for Fire Protection*, 2017 edition, National Fire Protection Association, Quincy, MA.

NFPA 16, *Standard for the Installation of Foam-Water Sprinkler and Foam-Water Spray Systems*, 2019 edition, National Fire Protection Association, Quincy, MA.

NFPA 17, *Standard for Dry Chemical Extinguishing Systems*, 2017 edition, National Fire Protection Association, Quincy, MA.

NFPA 17A, *Standard for Wet Chemical Extinguishing Systems*, 2017 edition, National Fire Protection Association, Quincy, MA.

NFPA 22, *Standard for Water Tanks for Private Fire Protection*, 2018 edition, National Fire Protection Association, Quincy, MA.

NFPA 70®, *National Electrical Code®*, 2017 edition, National Fire Protection Association, Quincy, MA.

NFPA 90A, *Standard for the Installation of Air-Conditioning and Ventilating Systems*, 2018 edition, National Fire Protection Association, Quincy, MA.

NFPA 92, *Standard for Smoke Control Systems*, 2018 edition, National Fire Protection Association, Quincy, MA.

NFPA *101®*, *Life Safety Code®*, 2018 edition, National Fire Protection Association, Quincy, MA.

NFPA 664, *Standard for the Prevention of Fires and Explosions in Wood Processing and Woodworking Facilities*, 2017 edition, National Fire Protection Association, Quincy, MA.

NFPA 720, *Standard for the Installation of Carbon Monoxide (CO) Detection and Warning Equipment,* 2015 edition, National Fire Protection Association, Quincy, MA (withdrawn).

NFPA 750, *Standard on Water Mist Fire Protection Systems*, 2019 edition, National Fire Protection Association, Quincy, MA.

NFPA 2001, *Standard on Clean Agent Fire Extinguishing Systems*, 2018 edition, National Fire Protection Association, Quincy, MA.

NFPA 2010, *Standard for Fixed Aerosol Fire-Extinguishing Systems*, 2015 edition, National Fire Protection Association, Quincy, MA.

NFPA 5000®, *Building Construction and Safety Code®*, 2018 edition, National Fire Protection Association, Quincy, MA.

Schifiliti, R., "Use of Fire Plume Theory in the Design and Analysis of Fire Detector and Sprinkler Response," Master's Thesis, Worcester Polytechnic Institute, Center for Firesafety Studies, Worcester, MA, 1986.

Schifiliti, R. P., and Pucci, W. E., *Fire Detection Modeling, State of the Art*, Fire Detection Institute, Windsor, CT, 1998.

Notification Appliances

CHAPTER

18

Chapter 18 includes requirements for audible and visual notification appliances for all types of systems. The chapter also addresses tactile appliances that are connected to a system. The use of notification appliances is not limited to occupant notification; they are also used to alert and inform emergency services personnel and staff. In addition to notification equipment, this chapter addresses equipment used to signal or present information to operators and other users of alarm and emergency communications systems (ECSs).

Beginning with the 2007 edition, changes have been made to accommodate ECSs, starting with the removal of the word *fire* where the term *fire alarm* had been used. This permits the requirements of Chapter 18 to be used in the application of audible and visual notification appliances for any system.

The following list is a summary of significant changes to Chapter 18 for the 2019 edition of the Code:

- In most instances, the term *visible appliance* was changed to *visual appliance*. The appliance itself is a visual appliance. The appliance and/or its lighting effect might or might not be visible to an observer.
- In most instances, the term *speaker* has been changed to *loudspeaker* to avoid confusion with times the word "speaker" identifies a person who is speaking.
- Requirements have been added to address notification appliances used for carbon monoxide (CO) signaling. Most requirements came from the 2015 edition of NFPA 720, *Standard for the Installation of Carbon Monoxide (CO) Detection and Warning Equipment*.
- Changes have been made to the Code and its annexes to address visual appliances with longer pulse durations compared to traditional xenon strobes.

18.1* Application.

A.18.1 Notification appliances should be sufficient in quantity, audibility, intelligibility, and visibility so as to reliably convey the intended information to the intended personnel during an emergency.

Notification appliances in conventional commercial and industrial applications should be installed in accordance with the specific requirements of Sections 18.4 and 18.5.

The Code recognizes that it is not possible to identify specific criteria sufficient to ensure effective occupant notification in every conceivable application. If the specific criteria of Sections 18.4 and 18.5 are determined to be inadequate or inappropriate to provide the performance recommended, approved alternative approaches or methods are permitted to be used.

Designers and AHJs are advised to consider alternative means in occupancies that have individuals with cognitive disabilities. In addition, persons responsible for evacuation planning should consider specific training for individuals with cognitive disabilities to familiarize them

with audible and visual signals and what responses are necessary based on their capabilities and any alternative means used.

System Design Tip

An NFPA 72 Task Group has identified at-risk groups that might react adversely to conventional audible and visual alarms and alerts. These groups include persons with autism and Down syndrome, and young children in general. In schools and other occupancies, accommodations could be made to protect these occupants during drills and tests, but that is not always effective and does not address unwanted alarms and real alarms. In some facilities where an at-risk population is the norm, reasonable accommodations can be made through careful design.

System Design Tip

For example, while the Code has a minimum required sound level and a maximum permitted sound level for an alarm, a good design will provide an audible signal that meets or only slightly exceeds the minimum requirements. This design would provide a more uniform sound level rather than one that has "loud" locations and "just right" locations.

The Code requires a minimum level of audibility and the use of a three-pulse temporal pattern (T3) for evacuation or relocation (four-pulse for CO warning). However, the Code does not specify the frequency content of the signal, except for sleeping areas where a 520 Hz signal is required. The use of alternative "sounds" such as chimes and lower frequencies, as opposed to the common piezo that operates at about 3100 Hz, might prove to be less disruptive. At this time, the fire alarm community is continuing to work to identify reasonable accommodations.

18.1.1 The requirements of this chapter shall apply where required by the authority having jurisdiction governing laws, codes, or standards; or other parts of this Code.

FAQ Where are the requirements to have occupant notification or staff notification?

The requirement to provide notification to occupants or staff is not in this chapter. If an authority having jurisdiction, other parts of this Code, or governing laws, codes, or standards require notification, this chapter contains methods to accomplish that task. See the commentary following 1.1.1. For example, requirements for having notification appliances are found in other codes, such as NFPA *101®, Life Safety Code®*. There also are sections of *NFPA 72®, National Fire Alarm and Signaling Code®*, that contain requirements for alerting occupants or staff, such as Section 10.15 and 10.6.9.1.1, which require an audible and visual trouble indication on failure of either primary or secondary power supply voltage. The required location for the signal is given in 10.15.7 and 10.15.8. Chapter 18 covers the installation and performance requirements for that required signal and the appliance that generates the signal. Also note that if audible occupant notification is required (by a different code) and if the noise level is high (>105 dBA), then 18.4.1.1 requires that visual signaling be added even if the enabling codes do not require visual appliances.

The *Americans with Disabilities Act and Architectural Barriers Act Accessibility Guidelines (ADA-ABA-AG)* address visual notification requirements, including requirements for where visual appliances should be located. The *ADA-ABA-AG* demonstrates how to comply with a law that says to treat everyone equally and fairly and is the "standard of care" that would be used in a lawsuit to evaluate compliance with the law. However, most jurisdictions have adopted their own accessibility codes or incorporated similar, enforceable requirements for audible and visual signaling into their building and fire codes. Most of those codes and standards, as well as the *ADA-ABA-AG*, reference *NFPA 72* for alarm system design and installation.

18.1.2 The requirements of this chapter shall address the reception of a notification signal and not the signal's information content.

Although the requirements in Chapter 18 do not address the content of a textual message or a message contained in a coded audible or visual signal, the requirements do address the ability of notification

appliances to deliver a message. Subsection 18.4.2 requires the use of the three-pulse temporal pattern for audible appliances where the desired action is evacuation or relocation. Similarly, 18.4.3 addresses the use of a four-pulse temporal pattern for CO alarms. [Also see Table 14.4.3.2, Items 22(1), 22(2), and 30(6), and 29.5.1.]

18.1.3 The performance, location, and mounting of notification appliances used to initiate or direct evacuation or relocation of the occupants, or for providing information to occupants or staff, shall comply with this chapter.

A building's fire emergency plan could require evacuation of the building or relocation of occupants within the protected premises. Signals or messages are also used to trigger staff to implement emergency procedures.

18.1.4 The performance, location, and mounting of annunciators, displays, and printers used to display or record information for use by occupants, staff, responding emergency personnel, or supervising station personnel shall comply with this chapter.

The scope of this chapter includes the types of notification appliances that provide information, not just alerting, to occupants, staff, responding emergency personnel, or supervising station personnel.

18.1.5* The requirements of this chapter shall apply to the areas, spaces, or system functions where required by the authority having jurisdiction governing laws, codes, or standards; or other parts of this Code requiring compliance with this chapter.

A.18.1.5 Chapter 18 establishes the means, methods, and performance requirements of notification appliances and systems. Chapter 18 does not require the installation of notification appliances or identify where notification signaling is required. Authorities having jurisdiction, other codes, other standards, and chapters of this Code require notification signaling and might specify areas or intended audiences.

For example, Chapter 10 requires audible and visible trouble signals at specific locations. A building or fire code might require audible and visual notification throughout all occupiable areas. In contrast, a building or fire code might require complete coverage with audible signaling, but might only require specific areas or spaces to have visual signaling. It is also possible that a referring code or standard might require compliance with mounting and notification appliance performance requirements without requiring complete notification signaling system performance. An example might be where an appliance is specifically located to provide information or notification to a person at a specific desk within a larger room.

Other parts of this Code may require notification to occupants or staff. The audible or visual notification appliances referred to in other chapters are described in detail in this chapter. An example is the requirement in Chapter 12 that a fault on a circuit produce an audible trouble signal at certain locations. As another example, requirements in Chapter 23 for occupant notification refer to Chapter 18 for requirements on the use of notification appliances to alert occupants of the need for evacuation or relocation. Similarly, notification appliances required by Chapter 26 to alert supervising station personnel must meet the requirements of Chapter 18.

•

18.1.6 Notification appliances shall be permitted to be used within buildings or outdoors and to target the general building, area, or space, or only specific parts of a building, area, or space designated in specific zones and sub-zones.

This paragraph explicitly recognizes the broader role of ECSs. While most fire alarm systems initiate general evacuation of an entire building, some may provide only partial evacuation or relocation. An ECS used for both fire and other emergencies may be required to communicate with a small subset of building occupants or even with an entire community.

Chapter 18 does not specify which rooms or areas require occupant notification. See 18.4.1.5.1 through 18.4.1.5.3.

N **18.1.7** The requirements of Chapters 10, 14, 23, and 24 shall apply to the interconnection of notification appliances, the control configurations, the power supplies, and the use of the information provided by notification appliances.

18.2 Purpose.

Notification appliances shall provide stimuli for initiating emergency action and provide information to users, emergency response personnel, and occupants.

In the condition-signal-response model, a signal is used to convey or indicate a condition that requires a response from people or equipment. See Section 10.8 and A.3.3.61. For example, when a smoke detector senses a smoke condition, it electrically signals the control unit, which then responds by activating occupant notification signals. Those occupant notification signals are intended to alert people to respond in a predetermined way, such as initiating an evacuation.

Of the five senses — sight, hearing, touch, taste, and smell — Chapter 18 contains requirements only for audible (hearing), visual (sight), and tactile (touch) appliances and signaling. Although not addressed in the chapter, olfactory (smell) appliances and signaling are used in industries such as mining.

18.3 General.

18.3.1 Listing. All notification appliances installed in conformity with Chapter 18 shall be listed for the purpose for which they are used.

The listing of notification appliances must be use-specific. That is, the listing of an appliance must relate to the way it will be used. This requirement correlates with the requirements of 10.3.1 and 10.3.2, which also require fire alarm system components to be installed in accordance with the manufacturers' published instructions. These instructions are taken into consideration by the listing organization. For example, visual notification appliances listed for wall mounting are not permitted to be installed on a ceiling (or horizontally suspended below the ceiling) because they are designed, tested, and listed for a specific vertical orientation to cover a specific area. If such appliances are mounted horizontally, such as on a ceiling, they will produce inadequate coverage. Appliances listed for ceiling mounting would be required for that application. Visual appliances listed for ceiling mounting can be suspended from the ceiling as permitted by 18.5.5.5.6.

See Exhibit 18.1 for an example of a typical notification appliance listed for fire alarm use.

18.3.2 Nameplates.

18.3.2.1 Notification appliances shall include on their nameplates reference to electrical requirements and rated audible or visual performance, or both, as defined by the listing authority.

EXHIBIT 18.1

Audible/Visual Textual Notification Appliance. (Source: Eaton, Long Branch, NJ)

18.3.2.2 Audible appliances shall include on their nameplates reference to their parameters or reference to installation documents (supplied with the appliance) that include the parameters in accordance with 18.4.4 or 18.4.5.

18.3.2.3 Visual notification appliances shall include on their nameplates reference to their parameters or reference to installation documents (supplied with the appliance) that include the parameters in accordance with 18.5.3.1 or Section 18.6.

System Design Tip

To guide designers and installers of fire alarm systems so that the system will deliver audible and visual information with appropriate intensity, the nameplate must state the capabilities of the appliance as determined through tests conducted by the listing organization. The nameplate information also helps inspectors verify compliance with approved documents. For example, an audible appliance specification sheet might state that the unit will provide 75 dBA at 10 ft (3 m). A designer can use these data to determine expected sound levels at other distances and locations. (See the commentary following 18.4.4.1.)

For the proper operation of each appliance, notification appliance circuits (NACs) require special treatment to ensure that the voltage supplied to all the connected appliances will be within the limits specified by the manufacturer and verified by the listing agency. Voltage that is below the operating range of the appliance can cause the appliances to produce visible signal intensities or sound pressure levels (SPLs) that are below the levels assumed in the design of the system.

FAQ What is the purpose of voltage drop calculations?

Under all operating conditions, the voltage on the NAC must be sufficient to operate all the notification appliances so that they deliver the proper signal intensity. Voltage drop calculations must be performed to ensure proper performance of the appliance and, on request, must be provided to the authority having jurisdiction in accordance with 7.2.1.

System Design Tip

In developing voltage drop calculations, the designer of the NAC should consider the following questions:

- What are the current and voltage limits of the power source for the circuit?

- Do these limits include the effects of any reduced voltage due to extended operation of the system on the secondary power supply?
- When a battery set is at its lowest operating voltage, what voltage is available at the NAC terminals?
- How many appliances can be connected to the NAC?
- What is or what should be the size of the field-wiring conductors?
- What is the total wire length of the NAC?
- Is the selected wire gauge appropriate for termination to the notification appliance?

Product Test Standard The manufacturer's design and the particular edition of the standard to which the notification appliance has been tested and listed determine the voltage range and maximum current that can be used in voltage drop calculations.

Older notification appliances may be marked with a rated (nameplate) range (e.g., 22–29 VDC). In the case of visual appliances, testing laboratories tested the appliances at 80 percent and 110 percent of their rated (nameplate) voltage to ensure proper signal intensity and flash rate. If a visual appliance was rated for operation between 22 volts and 29 volts, the output was tested at 17.6 volts and 31.9 volts. This tested range is the *operating range* and is different (wider) from the nameplate range. For this example, the NAC must be designed and installed to provide no less than 17.6 VDC at any visual appliance to deliver the required light output (intensity) and flash rate. Often, the worst-case operating condition is when the control unit's primary power supply has failed and the battery capacity is at its lowest point. ANSI/UL 864, *Standard for Control Units and Accessories for Fire Alarm Systems*, indicates a minimum value of 20.4 VDC (end of useful battery life). When a battery set is depleted to 20.4 VDC, what voltage is present at the NAC terminals? It could be less than 20.4 VDC and may differ for each manufacturer's product. For an appliance that requires 17.6 VDC or more, if 19.0 VDC is provided at the NAC terminals, then the maximum voltage drop between the NAC terminals and the last visual appliance must be 1.4 VDC or less (19.0 starting voltage at the control unit NAC minus the 17.6 VDC required at the visual appliance).

Current editions of standards relating to notification appliances eliminate the 80 percent to 110 percent testing that established the operating range and instead require a standard operating voltage range for notification appliances. The product standards now recognize "regulated" and "special application" appliances and circuits. In the case of regulated 24 VDC appliances, both the listed and the nameplate operating voltage ranges will be 16–33 VDC. Regulated appliances can be used on any regulated NAC that provides the correct voltage and current. On the other hand, special application requires that the appliance and the NAC be listed together.

For nominal 24 VDC regulated appliances, 16 VDC should be considered the minimum voltage that must be delivered by the NAC to any appliance. Appliances for 12 VDC systems will have a standard operating range of 8–17.5 VDC.

Some systems use voltages other than 12 or 24 VDC. For example, one system has 29 VDC appliances and the NACs are designed to provide 29 VDC at the terminals even when the AC line voltage varies and when batteries are at their lowest usable level. Audio systems might operate at 25 or 70 VAC and calculations are usually done using decibel loss (a log ratio of voltages) rather than an absolute value for voltage drop. In the case of "special application" appliances, the operating voltage range will be identified on both the appliance and its installation instructions.

The following examples use a nominal 24 VDC fire alarm system. The end of useful battery life, 20.4 VDC, becomes the starting point for the voltage drop calculations. In this example, it will be assumed that the 20.4 VDC is supplied at the NAC terminals. In some systems, the NAC voltage will be less than the 20.4 VDC battery voltage.

NOTE: Consult the manufacturer's specifications for the correct NAC voltage when batteries are at the end of their useful range.

Calculation Methods Several methods exist for calculating the voltage drop between the control unit and the last notification appliance on the NAC. Two possible methods are center-load calculations and point-to-point calculations. These methods require knowledge of actual appliance current draws, actual wire size, and measurements or accurate estimates of conductor length between the appliances as well as total conductor length. However, circuit length data might not be reliably estimated during the design phase.

Another method, the lump sum method, can be used because of the margin of safety it provides for unknowns. See Exhibit 18.2. This is the simplest voltage drop calculation method and assumes that the entire appliance loads are at the end of the circuit (lump sum). Ohm's law is used to calculate the voltage drop for the circuit. The relationship is as follows:

$$V_{load} = V_{terminals} - (I_{load}\, R_{conductors})$$

where:

V_{load} = 16 VDC minimum operating voltage of the appliance (for a nominal 24 VDC regulated appliance)

$V_{terminals}$ = 20.4 VDC (unless otherwise specified by the manufacturer and the listing)

I_{load} = total current draw of the connected appliances [amperes]*

$R_{conductors}$ = total conductor resistance [ohm]

*The total current draw is the sum of the maximum current draw for all the appliances on the circuit. The maximum current is the maximum root mean square (RMS) current within the listed voltage range (16–33 VDC for 24 VDC regulated units). For visual appliances, the maximum current could be at the minimum listed voltage. For audible appliances, the maximum current is usually at the maximum listed voltage. The product listing standards for notification appliances specify that only the maximum current be marked on the appliance. See Exhibit 18.2.

Solving for $R_{conductors}$ and using Table 8 of Chapter 9 in *NFPA 70®*, *National Electrical Code®* (*NEC®*), the required conductor size can be determined. Table 8 provides resistance per 1000 ft and per 1000 m for solid or stranded conductors at 167°F (75°C). The conductor resistance at other temperatures can be calculated or obtained from the wire manufacturer's data sheet. However, the temperature used should be similar to the ambient temperature where the conductors are located. The use of an elevated temperature might be necessary if it is known that the circuit will be run through a hot area such as some attics or in certain industrial areas.

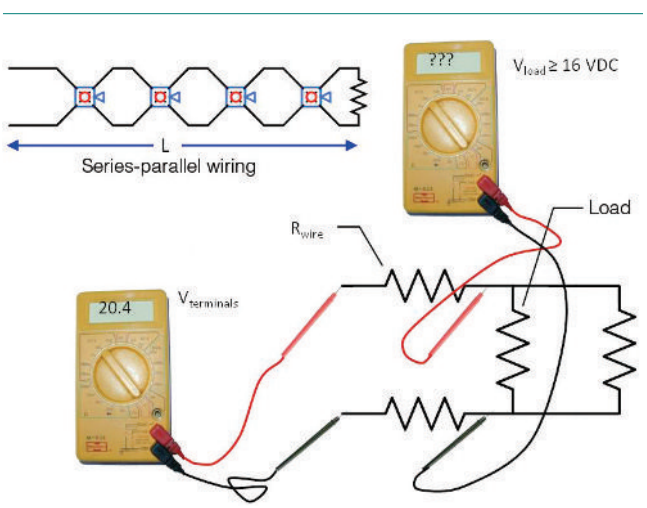

EXHIBIT 18.2

Lump Sum Model for Voltage Drop Calculations. (Source: R. P. Schifiliti Associates, Inc., Reading, MA)

FAQ What resistance must be included in the calculated total conductor resistance?

The length of the circuit run (the routing path between the control unit and the farthest appliance) used in the determination of conductor size is only half of the total conductor length because the total path of the circuit is from the control unit to the last appliance and then back to the control unit.

Example: Using a NAC terminal voltage of 20.4 VDC and assuming a minimum regulated appliance operating voltage (V_{load}) of 16 VDC and a total current draw (I_{load}) of 5.0 amperes, the resulting (maximum) total conductor resistance ($R_{conductors}$) is calculated as follows:

$$R_{conductors} = \frac{20.4 - 16}{5} = 0.88 \text{ ohm}$$

If the circuit were 100 ft (30.5 m) from end to end, the total conductor length would be 200 ft (61 m) (out and back). The maximum permitted resistance per foot would be 0.88 ohm ÷ 200 ft = 0.0044 ohm/ft, or 4.4 ohm/1000 ft (14.4 ohm/km). Per Table 8 of Chapter 9 of the *NEC*, a 14 AWG, stranded, uncoated copper conductor at 167°F (75°C) has a resistance of 3.14 ohm/1000 ft (10.3 ohm/km), which is less than the maximum calculated resistance of 4.4 ohm/1000 ft (14.4 ohm/km). A larger conductor or a reduction in total current draw would be needed to increase the circuit length.

Note that the total current draw might also be limited by the capability of the control unit output circuit. For example, many power-limited NACs have a maximum current output of 2.0 amperes. The length that this circuit could be if wired using 18 AWG, stranded, uncoated copper at 167°F (75°C) [7.95 ohm/1000 ft (26.1 ohm/km) per Table 8 of the *NEC*] is calculated as follows:

$$\frac{20.4\text{V} - 16\text{V}}{2 \text{ amperes}} = 2.2 \text{ ohm maximum total conductor resistance}$$

$$\frac{2.2 \text{ ohm}}{0.00795 \text{ ohm/ft}} = 276 \text{ ft maximum conductor length} \left(\frac{2.2 \text{ ohm}}{0.0261 \text{ohm/m}} = 84 \text{ m} \right)$$

$$\frac{276 \text{ ft}}{2} = 138 \text{ ft from the control unit to the last appliance} \left(\frac{84 \text{ m}}{2} = 42 \text{ m} \right)$$

This lump sum method to calculate voltage drop applies to NACs that are laid out and installed in a true series-parallel configuration, as are most of today's NACs (see Exhibit 18.2). However, addressable notification appliances are permitted to be installed on Class B circuits that have T-taps. These circuits are both NACs and signaling line circuits (SLCs). If the circuit has T-taps, it is not a true series-parallel circuit. The lump sum calculation method can still be used if the longest path is used as a length and the total current for all appliances is used for the load. However, the calculations will be conservative. More sophisticated calculation methods and tools that use point-to-point calculations would be more accurate.

Some equipment manufacturers provide spreadsheets or software tools that can be used to perform center-load or point-to-point circuit voltage calculations. A center-load calculation assumes the load is in the middle of the circuit length. A point-to-point model places each appliance load along the circuit and calculates the required wire size for each connecting segment, similar to the way that pipe sizes are calculated for sprinkler systems. For ease of stocking and installation, most installers do not bother changing wire sizes four or five times on a single circuit. However, some long circuits might be wired with a larger gauge wire at the start and then change to a smaller wire to feed a few appliances at the end that might be remotely located.

FAQ What load (current draw) should be used in the calculations?

Use of the actual current draw — that is, the amount of current based on the actual load intended to be on the circuit — is acceptable. However, if any appliances must be added to the circuit later, the

wire size might be incorrect unless some factor of safety was used when selecting the wire size. The control unit manufacturer's maximum rated current for the circuit is recommended to be used as the load. That way, the circuit is calculated at its maximum capacity. A factor of safety should also be used in estimating the circuit length. Some owners, engineers, and authorities might require factors of safety in the calculations.

When new appliances are added to older NACs or when the fire alarm control unit (FACU) is replaced, compatibility must be ensured. The appliance manufacturer should be contacted if any questions arise relating to the electrical specifications or listing of the product.

Commentary Table 18.1 shows maximum circuit lengths calculated for a variety of current flows and wire sizes. The lump sum calculations use the low battery starting voltage of 20.4 VDC and assume a minimum appliance operating voltage (V_{load}) of 16 VDC. As previously noted, the NAC terminal voltage and the appliance required voltage may vary from product to product.

COMMENTARY TABLE 18.1 *Maximum Circuit Lengths (Control Unit to Last Appliance) for a Voltage Drop of 20.4 VDC to 16 VDC at Various Current Draws*

	Uncoated Copper at 167°F (75 ˚C)									
AWG	***18 Solid***	***18 Strand***	***16 Solid***	***16 Strand***	***14 Solid***	***14 Strand***	***12 Solid***	***12 Strand***	***10 Solid***	***10 Strand***
Strands	1	7	1	7	1	7	1	7	1	7
Ohm/1000 ft	7.77	7.95	4.89	4.99	3.07	3.14	1.93	1.98	1.21	1.24
Amperes	***Maximum Circuit Length With No Safety Factor [ft]***									
0.5	566	553	900	882	1433	1401	2280	2222	3636	3548
1.0	283	277	450	441	717	701	1140	1111	1818	1774
1.5	189	184	300	294	478	467	760	741	1212	1183
2.0	142	138	225	220	358	350	570	556	909	887
2.5	113	111	180	176	287	280	456	444	727	710
3.0	94	92	150	147	239	234	380	370	606	591
3.5	81	79	129	126	205	200	326	317	519	507
4.0	71	69	112	110	179	175	285	278	455	444
4.5	63	61	100	98	159	156	253	247	404	394
5.0	57	55	90	88	143	140	228	222	364	355
5.5	51	50	82	80	130	127	207	202	331	323
6.0	47	46	75	73	119	117	190	185	303	296

Source: R. P. Schifiliti Associates, Inc., Reading, MA.

18.3.3 Physical Construction.

18.3.3.1 Appliances intended for use in special environments, such as outdoors versus indoors, high or low temperatures, high humidity, dusty conditions, and hazardous locations, or where subject to tampering, shall be listed for the intended application.

Maintaining the operational integrity of audible and visual notification appliances is essential, despite their possible location in relatively hostile environments. Use of appliances not listed for the type of environment in which the appliance is to be placed is a violation of 18.3.3.1. For example, in a location where ignitible concentrations of flammable gases, flammable liquid–produced vapors, or combustible liquid–produced vapors might exist, appliances would be required to be properly rated (Class I). Refer also to 10.3.5 and 10.4.3.

Δ **18.3.3.2*** Notification appliances used for signaling other than fire shall not have the word FIRE, or any fire symbol, in any form (i.e., stamped, imprinted, etc.) on the appliance visible to the public.

A.18.3.3.2 The intent is to prohibit labeling that could give an incorrect message. Wording such as "Emergency" would be acceptable for labeling because it is generic enough not to cause confusion. Fire alarm systems are often used as emergency notification systems, and therefore attention should be given to this detail.

Combination audible and visual notification appliances are permitted to have multiple visual elements each labeled differently or not labeled at all.

EXHIBIT 18.3

Dual Purpose Visual Appliance. (Source: System Sensor Corp., St. Charles, IL)

An ECS can use the same appliances for signaling fire and other emergencies. In such instances, the appliance is not permitted to have "FIRE" markings. Where ECSs use multiple visual appliances, one visual appliance is labeled "FIRE" and is used to signal the need for immediate evacuation or relocation; another visual appliance is used during more complex situations to signal the need for occupants to get additional information from other sources. For example, during a chemical release or bomb threat, communicating specific evacuation or relocation instructions might be necessary to prevent occupants from undesired exposure. The use of different types or colors of visual notification appliances on a system to influence occupant behavior should be carefully considered. However, it might be advisable only where the occupants are not transient and are well trained and drilled in the required response.

N **18.3.3.3** Notification appliances with multiple visible elements used for signaling other than fire shall be permitted to have fire markings only on those visible elements used for fire signaling.

Some manufacturers produce appliances with multiple visual signaling elements. These can be installed as alternatives to multiple, separate appliances when different types of emergencies must be signaled. Where one of the elements is used exclusively for signaling fire emergencies, 18.3.3.3 permits that element to be marked "FIRE," even though the appliance is used to signal other types of emergencies. An example of this type of appliance is shown in Exhibit 18.3.

18.3.4* Mechanical Protection.

A.18.3.4 Situations exist where supplemental enclosures are necessary to protect the physical integrity of a notification appliance. Protective enclosures should not interfere with the performance characteristics of the appliance. If the enclosure degrades the performance, methods should be detailed in the manufacturer's published instructions of the enclosure that clearly identify the degradation. For example, where the appliance signal is attenuated, it might be necessary to adjust the appliance spacings or appliance output.

System Design Tip

Mechanical protection is usually provided by an enclosure that protects the actual audible or visual mechanism. With loudspeakers, mechanical protection in the form of a baffle or screen protects the cone from being punctured by a sharp object. See Exhibit 18.4 for an example of a typical notification appliance with a mechanical baffle.

Guards placed over an audible or visual appliance can degrade the level of the audible signal or the light intensity of the appliance. For that reason, the guard or protective device must be tested with the specific appliance, and its effect must be measured and reported. System designers, installers, and inspectors can then de-rate the appliance performance and make corrections when using the appliance with the guard in a design. Exhibit 18.5 is an example of a typical protective guard for an audible/visual appliance.

18.3.4.1 Appliances subject to mechanical damage shall be suitably protected.

18.3.4.2 If guards, covers, or lenses are employed, they shall be listed for use with the appliance.

In the case of an appliance such as the one shown in Exhibit 18.4, the integral mechanical baffle protecting the audible part of the appliance is a normal part of the appliance, and its effect is accounted for in the product listing. The guard shown in Exhibit 18.5 is an aftermarket product that must be listed for use with the specific appliance. That listing will state the performance restrictions, if any.

18.3.4.3 The effect of guards, covers, or lenses on the appliance's field performance shall be in accordance with the listing requirements.

18.3.5 Mounting.

18.3.5.1 Appliances shall be supported independently of their attachments to the circuit conductors.

18.3.5.2 Appliances shall be mounted in accordance with the manufacturer's published instructions.

Physically supporting the appliance by means of the conductors that connect the appliance to the NAC of the fire alarm system is not permitted by 18.3.5.1. Constant strain on terminal connections can cause conductors to pull free or break. See Exhibit 18.6 for an example of independent support for a notification appliance. The appliance is physically supported by attachment with screws to a backbox, and is not supported by the wires.

18.3.6* Connections. Terminals, leads, or addressable communication, that provide for monitoring the integrity of the notification appliance connections shall be provided.

A.18.3.6 For hardwired appliances, terminals or leads, as described in 18.3.6, are necessary to ensure that the wire run is broken and that the individual connections are made to the leads or other terminals for signaling and power.

A common terminal can be used for connection of incoming and outgoing wires. However, the design and construction of the terminal should not permit an uninsulated section of

EXHIBIT 18.4

Notification Appliance Showing Mechanical Baffle. (Source: Eaton, Long Branch, NJ)

EXHIBIT 18.5

Protective Guard for Audible/Visual Appliance. (Source: Safety Technology International, Inc., Waterford, MI)

EXHIBIT 18.6

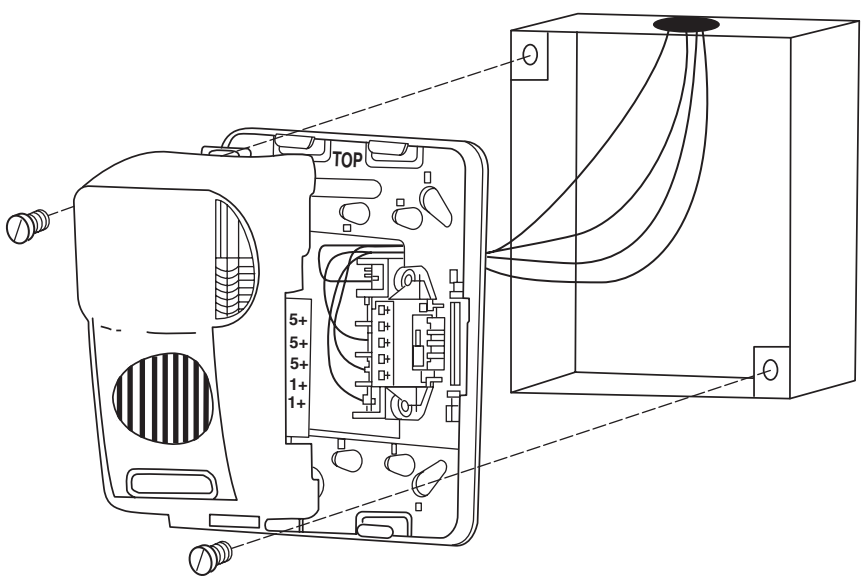

Notification Appliance with Independent Support. (Source: Gentex Corp., Zeeland, MI)

a single conductor to be looped around the terminal and to serve as two separate connections. For example, a notched clamping plate under a single securing screw is acceptable only if separate conductors of a notification circuit are intended to be inserted in each notch. *[See Figure A.17.4.5(a).]*

Another means to monitor the integrity of a connection is to establish communication between the appliance and the control unit. The integrity of the connection is verified by the presence of communication. Monitoring integrity in this fashion might not require multiple terminals or leads, as previously described.

It should be noted that monitoring the integrity of the installation conductors and their connection to an appliance does not guarantee the integrity of the appliance or that it is operational. Appliances can be damaged and become inoperable or a circuit can be overloaded, resulting in failure when the appliances are called upon to work. Presently, only testing can establish the integrity of an appliance.

FAQ

What is required to ensure the monitoring for integrity of the NAC?

To provide system reliability and availability, NACs are monitored for integrity in accordance with the requirements of Section 12.6. Although some systems are capable of monitoring the presence and performance of the appliance itself, the Code only requires monitoring or supervision of the circuit. To comply with the requirements of Section 12.6, especially for appliances that are not addressable, the appliance must have the correct number and type of screw terminals or pigtail leads to permit proper connection to the circuit. See Figure A.17.4.5(a). Although it shows initiating devices, Figure A.17.4.5(a) is equally applicable to notification appliances. The correct type of terminals or leads, combined with correct installation practice, results in the circuit opening, as intended, if a connection to an appliance is broken. This open circuit results in a trouble signal at the FACU.

As with addressable initiating devices, addressable notification appliances, produced by some manufacturers, monitor circuit integrity using digital communication rather than current flow. Some systems can even monitor the electrical characteristics of the appliance to know if settings have been altered.

18.4 Audible Characteristics.

18.4.1 General Requirements.

18.4.1.1* An average ambient sound level greater than 105 dBA shall require the use of a visual notification appliance(s) in accordance with Section 18.5 where the application is public mode or Section 18.6 where the application is private mode.

The ambient sound level is so high in some occupancies that the sole reliance on audible notification appliances would be impractical. A drop forge shop, a large casino, a rock music concert hall, or a newspaper pressroom are all candidates for the addition of visual signal appliances to help alert occupants. Exhibits 18.7 and 18.8 show examples of visual notification appliances.

Visual signaling is required when the ambient SPLs exceed 105 dBA because trying to overcome that level with audible fire alarm signals is difficult and possibly harmful. In some occupancies, such as theaters, concert halls, and nightclubs, it may be possible to turn off the ambient noise when the fire alarm system is activated, as permitted by 18.4.4.5.

EXHIBIT 18.7

Visual Notification Appliance. (Source: Eaton, Long Branch, NJ)

A.18.4.1.1 The Code does not require that all audible notification appliances within a building be of the same type. However, a mixture of different types of audible notification appliances

EXHIBIT 18.8

Visual Notification Appliance. (Source: Johnson Controls, Westminster, MA)

within a space is not the desired method. Audible notification appliances that convey a similar audible signal are preferred. For example, a space that uses mechanical horns and bells might not be desirable. A space that is provided with mechanical horns and electronic horns with similar audible signal output is preferred.

However, the cost of replacing all existing appliances to match new appliances can impose substantial economic impact where other methods can be used to avoid occupant confusion of signals and signal content. Examples of other methods used to avoid confusion include, but are not limited to, training of occupants, signage, consistent use of temporal code signal pattern, and fire drills.

Hearing protection can attenuate both the ambient noise level and the audible signal. Specifications from hearing protection manufacturers might allow the effect of hearing protection devices to be evaluated. In spaces where hearing protection is worn due to high ambient noise conditions, visual notification appliances should be considered.

In addition, where hearing protection is worn due to high ambient noise conditions, the audible signal and ambient noise measurements can be analyzed and the audible signal can be adjusted to account for attenuation caused by the hearing protection devices.

An example of mixing different audible tones is the application of low frequency sounders in accordance with 18.4.6. The low frequency sound is required only in the sleeping areas. So, for example, in a hotel, the Code would require that the fire alarm system produce the low frequency sound in the guest rooms. It would be acceptable to use conventional, higher frequency appliances in the hallways and other non-sleeping areas.

FAQ Why not use the same low frequency tone in all areas?

The same low frequency tone is not normally used in all areas because it requires more power to produce the low frequency sound at the required levels. More power means larger wire sizes and higher capacity standby batteries — all increasing system costs with limited performance benefit.

18.4.1.2* The total sound pressure level produced by combining the ambient sound pressure level with all audible notification appliances operating shall not exceed 110 dBA at the minimum hearing distance.

N

TABLE A.18.4.1.2 *Permissible Noise Exposures*

Duration (hr)	L_A *(dBA)*
8	90
6	92
4	95
3	97
2	100
1.5	102
1	105
0.5	110
0.25	115
0.125 (7.5 minutes)	120

Source: OSHA, 29 CFR 1910.5, Table G-16, Occupational Noise Exposure.

A.18.4.1.2 The maximum sound pressure level permitted in a space is 110 dBA. In the 2007 edition, this was reduced from 120 dBA in previous editions. The change from 120 dBA to 110 dBA was made to coordinate with other laws, codes, and standards.

In addition to the danger of exposure to a high sound level, long-term exposure to lower levels could also be a problem when, for example, occupants must traverse long egress paths to exit or technicians test large systems over extended time periods.

This Code does not presume to know how long a person will be exposed to an audible notification system. The limit of 110 dBA has been set as a reasonable upper limit for the performance of a system. For workers who could be exposed to high sound levels over the course of a 40-year employment history, OSHA (Occupational Health and Safety Administration) has established a maximum permitted dose before a hearing conservation program must be implemented. A worker exposed to 120 dBA for 7.5 minutes a day for 40 years might be in danger of suffering a hearing impairment. The OSHA regulation includes a formula to calculate a dose for situations where a person is exposed to different sound levels for different periods of time. The maximum permitted by the regulation is an 8-hour equivalent dose of 90 dBA. It is possible to calculate the dose a person experiences when traversing an egress path where the sound pressure level varies as he/she passes close to, then away from, audible appliances. Table A.18.4.1.2 depicts OSHA permissible noise exposures.

The 110 dBA limit is for the SPL at any location with the entire system operating, not just near any one appliance. The "minimum hearing distance" is not defined, but for most installations it is assumed to be when a person is standing directly under or next to one appliance or noise source.

FAQ How can the minimum hearing distance be determined?

Given the decibel rating of an audible appliance at some stated distance, the level at any other distance can be calculated. (See the *SFPE Handbook of Fire Protection Engineering* chapter on design of detection systems or a text on sound system design.) Most fire alarm appliances are rated using a distance of 10 ft (3 m) or, by some standards, 3 ft (1 m). Commentary Table 18.2 shows the minimum hearing distances at which someone would experience 110 dBA and 105 dBA for several appliance ratings. These values correlate with the limit specified in 18.4.1.2 and a 5 dBA factor of safety.

COMMENTARY TABLE 18.2 *Minimum Hearing Distance*

Appliance Ratings in dBA at 10 ft (3.0 m)	*Min. Hearing Distance for 110 dBA*		*Min. Hearing Distance for 105 dBA*	
	in.	mm	in.	mm
70	1	25	2	50
75	2	50	4	101
80	4	101	7	178
85	7	178	12	305
90	12	305	21	533
95	21	533	38	965
100	38	965	67	1702

Appliance ratings specified by manufacturers are often conservative by 3 to 10 decibels. That is, if the appliance is rated at 75 dBA at 10 ft, a good practice would be to assume that it will actually produce 78 to 85 dBA at 10 ft. Using the adjusted rating along with the column for a 105 dBA maximum would provide a sufficient cumulative factor of safety for most situations.

Another factor affecting the perceived loudness of an appliance is the frequency of the sound. When an ear or a sound level meter is very close to the appliance, it may be in an area called the *near field*. The near field distance is equal to about two wavelengths of the sounder frequency. In the near field, the decibel level might fluctuate higher and lower than that shown in the table. For common piezo appliances producing high frequency sound on the order of 3000 Hz, the near field extends only about 9 in. (23 cm) from the appliance and is usually not a factor. However, for low frequency sounders required (see 18.4.6), the near field extends to about 52 in. (132 cm) from the appliance and should be considered when determining the minimum allowable hearing distance for a given appliance.

FAQ

What is the combined SPL when multiple sources, such as ambient noise and a fire alarm notification appliance, exist?

SPLs are added together logarithmically. So, 60 dB from one source and 60 dB from another source will measure 63 dB. (See the *SFPE Handbook of Fire Protection Engineering* chapter on design of detection systems or a text on sound system design for more on dB math.) When one sound source, such as an alarm signal, is significantly louder than another sound source, such as ambient noise, the combined sound level will be unaffected by the lower source. For two sound sources reaching your ear at different SPLs, if they are different by approximately 5 dB or more, the lesser source has an insignificant effect on the perceived loudness.

For example, the ambient noise is 55 dBA at a given location in a room. An audible fire alarm appliance produces 60 dBA at the same location. The combined average SPL measured by a meter is only 61 dBA. Due to reverberation and meter accuracy, the actual measurement would range from about 58 to 64 dBA.

Δ **18.4.1.3*** Sound from normal or permanent sources, having a duration of at least 60 seconds, shall be included when measuring maximum ambient sound level.

For all audible signaling, the worst-case conditions should be used for all ambient and alarm sound level measurements. Determining the worst case might entail testing with doors and other barriers both opened and closed. However, it is not necessary to open a door to get the worst-case noise and then close the door to get the worst-case alarm level — or vice versa. Instead, the difference between ambient and alarm can be measured with the door open and then again with the door closed to verify that the required levels are met in both situations. See also 18.4.6.2.

A.18.4.1.3 In determining maximum ambient sound levels, sound sources that should be considered include air-handling equipment and background music in a typical office environment, office cleaning equipment (vacuum cleaner), noisy children in a school auditorium, car engines in an auto shop, conveyor belts in a warehouse, and a running shower and fan in a hotel bathroom. Temporary or abnormal sound sources that can be excluded would include internal or external construction activities (i.e., office rearrangements and construction equipment).

N **18.4.1.4** Sound from temporary or abnormal sources lasting less than 60 seconds shall not be required to be included when measuring maximum ambient sound level.

Δ **18.4.1.5** Audible alert and evacuation signal tones, including those that precede or follow voice messages, shall meet the requirements of 18.4.4 (Public Mode Audible Requirements), 18.4.5 (Private Mode Audible Requirements), 18.4.6 (Sleeping Area Requirements), or 18.4.7 (Narrow Band Tone Signaling for Exceeding Masked Thresholds), as applicable.

The requirements in this paragraph apply to the tones produced by audible appliances used for alert and evacuation. The requirements do not apply to the appliances that produce the sounds but to the

sum of the sounds produced at a location. The term *notification appliances* was removed from this paragraph in the 2016 edition to emphasize this point. This paragraph works with Table 14.4.3.2, Item 22(2), to require measurement of the SPLs of tones but not the SPLs of voice messages. See the text of A.18.4.1.6 for an explanation of why the SPL of voice messages is not required to be measured.

A common error made during testing is measuring the sound level at a distance of 10 ft (3 m) from each audible appliance. Since the appliance has a listed rating of a certain dBA at 10 ft (3 m), some technicians and authorities use this measurement to try to determine if the appliance is performing correctly. However, there is no requirement for such a measurement. Instead, it is the sound level throughout a space that must meet certain requirements, regardless of the loudness of individual appliances. In fact, the loudness of an appliance at the rated distance is expected to be different from the listed rating because of the way the listing test is performed and because of local acoustical conditions.

18.4.1.5.1* The designer of the audible notification system shall identify the rooms and spaces that will have audible notification and those where audible notification will not be provided.

A.18.4.1.5.1 Audibility of a fire or emergency signal might not be required in all rooms and spaces. For example, a system that is used for general occupant notification should not require audibility of the signal in closets and other spaces that are not considered as occupiable spaces. However, a space of the same size used as a file room would be considered occupiable and should have coverage by notification appliances. Also, signaling intended only for staff or emergency forces might only have to be effective in very specific locations.

System Design Tip

There are two main purposes for having the system designer identify where audible signaling will be provided: 1) to indicate that there might be places where audible signaling will not be provided, and 2) to set up the documentation required by 18.4.1.5.4 through 18.4.1.5.7. Chapter 7 provides a single location for documentation requirements. For notification appliances, most documentation requirements are in Chapter 18 and cross-referenced in Chapter 7. Project specifications, other codes, or other parts of this Code, such as Chapter 24, might require additional specific documentation elements identified in Chapter 7 for certain types of systems or specific applications.

Δ **18.4.1.5.2*** Unless otherwise required by other sections of this Code, the coverage area for audible occupant notification shall be as required by other governing laws, codes, or standards.

System Design Tip

By design, *NFPA 72* does not require any type of notification — audible or visual — except for a few control unit and supervising station signaling needs. The requirements to have occupant notification are to be provided by other governing laws, codes, or standards, such as NFPA *101* or local building or fire codes. Although these other documents should be clear about what parts of a building or space require audible and/or visual signaling, many of them provide only a blanket requirement for an occupancy or use group to have notification signaling, and they rely on *NFPA 72* to provide the detail.

A.18.4.1.5.2 See 3.3.186 for the definition of occupiable.

N **18.4.1.5.3** Where other governing laws, codes, or standards require audible occupant notification for all or part of an area or space, coverage shall only be required in occupiable areas as defined in 3.3.187.

System Design Tip

Since no code, including *NFPA 72,* can anticipate all scenarios, this paragraph provides a default for the designer to provide audible signaling only in the occupiable parts of the building or area required to be covered by the enabling code, law, or standard. See the definitions of *occupiable* and *occupiable area* in 3.3.186 and 3.3.187.

Δ **18.4.1.5.4** The sound pressure levels that must be produced by the audible appliances in the coverage areas to meet the requirements of this Code shall be documented by the system designer during the planning and design of the notification system.

N **18.4.1.5.5** The greater of the expected average ambient sound pressure level or expected maximum sound pressure level having a duration of at least 60 seconds shall be documented for the coverage area by the system designer to ensure compliance with 18.4.4, 18.4.5, 18.4.6, or 18.4.7.

18.4.1.5.6 The design sound pressure levels to be produced by the notification appliances for the various coverage areas shall be documented for use during acceptance testing of the system.

See the commentary following 18.4.1.5.

18.4.1.5.7 Where required by the authority having jurisdiction, documentation of the design sound pressure levels for the various coverage areas shall be submitted for review and approval.

System Design Tip

Paragraphs 18.4.1.5.4 through 18.4.1.5.7 help to ensure proper design, review, approval, and testing. When a system is being tested, the maximum ambient noise level might not be present. Although the maximum ambient noise level is not required to be present to conduct a test, it is necessary to know what sound level is required for the system to pass. Paragraph 18.4.1.5.5 requires the design ambient levels to be documented. If changes in the environment or occupancy occur and significant changes in ambient noise are measured, the adequacy of the design can be questioned. The design noise level is not necessary to be present when testing because the difference in the measurement would be minor compared to the required design SPL. Note that 18.4.1.5.7 only requires the data to be submitted for approval "where required by the authority having jurisdiction." This is an example of where the authority having jurisdiction would use Chapter 7 as a "menu" to select the specific documentation to be submitted for certain projects. Remember that the term *authority having jurisdiction* is broadly defined — see A.3.2.2 for examples of various authorities.

18.4.1.6* Voice messages shall not be required to meet the audibility requirements of 18.4.4 (Public Mode Audible Requirements), 18.4.5 (Private Mode Audible Requirements), 18.4.6 (Sleeping Area Requirements), or 18.4.7 (Narrow Band Tone Signaling for Exceeding Masked Thresholds), but shall meet the intelligibility requirements of 18.4.11 where voice intelligibility is required.

FAQ Why are audibility measurements not required for textual (voice) signals?

If a loudspeaker produces an alert tone signal of adequate sound level, but the message is not intelligible, then such a signal is not adequate. Chapter 14, which covers inspection, testing, and maintenance, does not require the SPL of voice signals to be measured for audibility because the sound being produced is modulated and would not result in a meaningful measurement. See also the defined terms *intelligibility* and *intelligible* in 3.3.144 and 3.3.145.

Additional requirements for textual audible appliances are covered in Section 18.8. More discussion of voice system intelligibility, the factors that affect it, and how it is evaluated and measured can be found in Annex D, Speech Intelligibility, and "Voice Intelligibility for Emergency Voice/Alarm Communications Systems" at the end of Annex D.

A.18.4.1.6 Because voice is composed of modulated tones, it is not valid to compare loudness measurements of tone signals with loudness measurements of voice signals. A voice signal that is subjectively judged to be equally as loud as a tone signal will actually produce a dB reading below that of the tone signal. The modulated tones of a voice signal can have the same or greater peak amplitude as that of a tone signal. However, because they are modulated meters with fast or slow time, constants will show a lower dB or dBA reading.

A voice signal must have sufficient audibility to result in intelligible communication. Intelligibility modeling/measurements (subject based and instrument based) include audibility as well as many other factors when determining whether a voice signal is adequate or not adequate.

Exhibit 18.9 demonstrates the differences between a tonal alert and a voice signal.

18.4.1.7 Audible notification appliances used for exit marking shall not be required to meet the audibility requirements of 18.4.4 (Public Mode Audible Requirements), 18.4.5 (Private Mode Audible Requirements), 18.4.6 (Sleeping Area Requirements), or 18.4.7 (Narrow Band Tone Signaling for Exceeding Masked Thresholds), except as required by 18.4.8 (Exit Marking Audible Notification Appliance Requirements).

Exit marking audible notification systems (see 3.3.182.1.1 and 18.4.8) could have "targeted" areas where specific appliances should be heard to direct occupant movement.

18.4.2 Distinctive Evacuation Signal.

This subsection requires the use of the three-pulse temporal pattern (T3) for more than just *total building* evacuation. The distinctive evacuation signal must also be used for *partial* evacuation or relocation, as explained in A.18.4.2.1. This correlates with ANSI/ASA S3.41, *American National Standard Audible Emergency Evacuation (E2) and Evacuation Signals with Relocation Instructions (ESRI).*

18.4.2.1* To meet the requirements of Section 10.10, the alarm audible signal pattern used to notify building occupants of the need to evacuate (leave the building) or relocate (from one area to another) shall be the standard alarm evacuation signal consisting of a three-pulse temporal pattern. The pattern shall be in accordance with Figure 18.4.2.1 and shall consist of the following in this order:

(1) "On" phase lasting 0.5 second ±10 percent
(2) "Off" phase lasting 0.5 second ±10 percent for three successive "on" periods
(3) "Off" phase lasting 1.5 seconds ±10 percent

Exception: Where approved by the authority having jurisdiction, continued use of the existing consistent evacuation signaling scheme shall be permitted.

A.18.4.2.1 Section 10.10 requires that alarm signals be distinctive in sound from other signals and that this sound not be used for any other purpose. The use of the distinctive three-pulse temporal pattern signal required by 18.4.2.1 became effective July 1, 1996, for new systems installed after that date. It is not the intent to prohibit continued use of an existing consistent evacuation signaling scheme, subject to approval by the authority having jurisdiction. It is also not the intent that the distinct pattern be applied to visible notification appliances.

Prior to the 2013 edition, the use of the temporal code 3 distinctive evacuation signal was intended only where evacuation of the building was the intended response. In order to eliminate

EXHIBIT 18.9

Spectrogram Showing Modulated Voice Message Following T3 Tonal Alert Signal. (Source: R. P. Schifiliti Associates, Inc., Reading, MA)

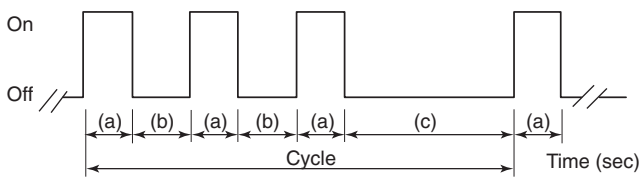

Key:
Phase (a) signal is on for 0.5 sec ±10%
Phase (b) signal is off for 0.5 sec ±10%
Phase (c) signal is off for 1.5 sec ±10% [(c) = (a) + 2(b)]
Total cycle lasts for 4 sec ±10%

FIGURE 18.4.2.1 *Temporal Pattern Parameters.*

the need for additional signals to mean "relocate," the signal is now permitted to be used where relocation or partial evacuation is the intended response. The simple result is people should not be in any area where the signal is sounding and that it is safe to be anywhere that signal is not sounding.

The temporal pattern can be produced by any audible notification appliance, as illustrated in Figure A.18.4.2.1(a) and Figure A.18.4.2.1(b).

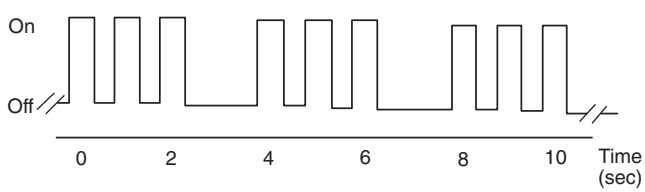

FIGURE A.18.4.2.1(a) *Temporal Pattern Imposed on Signaling Appliances That Emit Continuous Signal While Energized.*

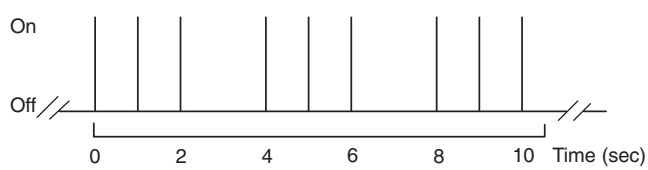

FIGURE A.18.4.2.1(b) *Temporal Pattern Imposed on Single-Stroke Bell or Chime.*

18.4.2.2 A single-stroke bell or chime sounded at "on" intervals lasting 1 second ±10 percent, with a 2-second ±10 percent "off" interval after each third "on" stroke, shall be permitted.

18.4.2.2.1 The minimum repetition time shall be permitted to be manually interrupted.

18.4.2.2.2 The minimum repetition time shall be permitted to be automatically interrupted for the transmission of mass notification messages in accordance with Chapter 24.

In some situations, 180 seconds can be a long time to wait to hear emergency instructions. Paragraph 18.4.2.2.2 permits emergency messages to take precedence. The messaging strategy for ECSs and mass notification systems (MNSs) requires careful planning and approval by stakeholders.

18.4.2.3* The standard evacuation signal shall be synchronized within a notification zone.

A.18.4.2.3 Coordination or synchronization of the audible signal within a notification zone is needed to preserve the temporal pattern. It is unlikely that the audible signal in one evacuation/notification zone will be heard in another at a level that will destroy the temporal pattern. Thus, it would not normally be necessary to provide coordination or synchronization for an entire system. Caution should be used in spaces such as atriums, where the sounds produced in one notification zone can be sufficient to cause confusion regarding the temporal pattern.

N **18.4.3 Distinctive Carbon Monoxide Audible Alarm Signal.** NFPA 720

Requirements for CO detectors, CO systems, and CO alarms were added to *NFPA 72* in 2019. The requirements came from the 2015 edition of NFPA 720, which has been withdrawn.

N **18.4.3.1** Where a carbon monoxide detector or alarm is required by other codes or standards or by the authority having jurisdiction and where an audible signal is required, a distinctive signal pattern shall be required that is different from a fire evacuation signal.

N **18.4.3.2** Where an audible signal is required, the carbon monoxide signal shall be a four-pulse temporal pattern and comply with the following:

(1) Signals shall be a pattern consisting of four cycles of 100 milliseconds ± 10 percent "on" and 100 milliseconds ± 10 percent "off," followed by 5 seconds ± 10 percent "off," as demonstrated in Figure 18.4.3.2.
(2) After the initial 4 minutes of the carbon monoxide signal, the 5-second "off" time shall be permitted to be changed to 60 seconds ± 10 percent.
(3) The alarm signal shall be repeated in compliance with 18.4.3.2(1) and 18.4.3.2(2) until the alarm resets or the alarm signal is manually silenced.

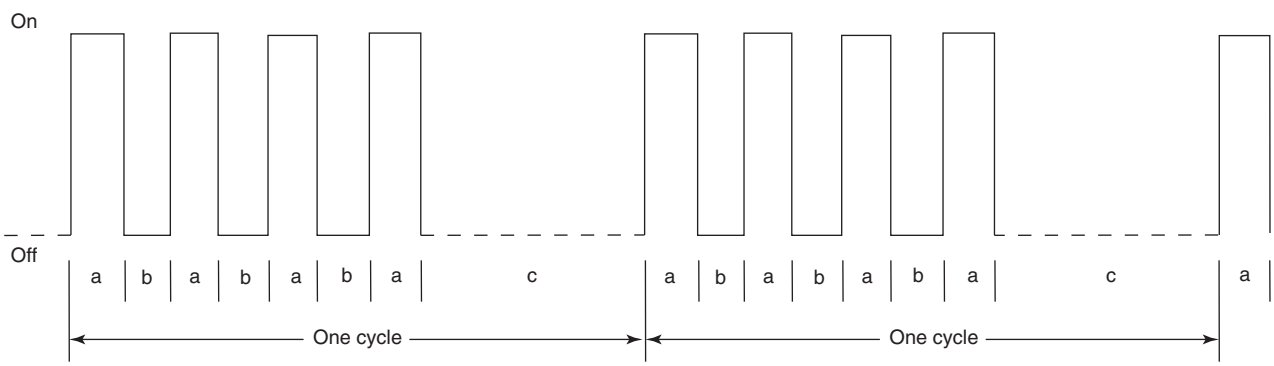

Phase a: signal is on for 100 ms ± 10 ms.
Phase b: signal is off for 100 ms ± 10 ms.
Phase c: signal is off for 5 sec ± 0.5 sec for initial 4 minutes.
After the initial 4 minutes Phase c: signal is permitted to be changed to 60 s ± 6 s off.

Although the diagram shows a square waveform, the wave can have other shapes that produce a similar effect.

FIGURE 18.4.3.2 *Temporal Pattern Parameters — Carbon Monoxide Signal.*

The four-pulse temporal pattern (T4) CO signal is not necessarily an evacuation signal. It is intended to warn occupants of the presence of CO.

N **18.4.3.3** The signal shall be synchronized within a notification zone of a protected premises.

N **18.4.3.4** The audible signal of carbon monoxide alarms and systems installed to meet the requirements of Chapter 29 shall not be required to be synchronized.

Chapter 29 permits the use of single- and multiple-station CO alarms, which need not be synchronized.

18.4.4* Public Mode Audible Requirements.

There is no requirement in this Code that individual audible appliances produce a minimum SPL. Instead, the Code requires the system as a whole to produce a minimum SPL throughout all areas where the signal is required. (See also 18.4.1.5.) This permits signaling at lower sound levels in small, enclosed spaces or in spaces with low ambient noise levels. This also permits targeted signaling using personal notification appliances. The audible notification requirements in this chapter are performance based. In many instances, performance requirements can be met using appliances rated at less than 75 dBA at 10 ft (3 m).

A.18.4.4 The typical average ambient sound level for the occupancies specified in Table A.18.4.4 are intended only for design guidance purposes. The typical average ambient sound levels specified should not be used in lieu of actual sound level measurements.

Δ ***TABLE A.18.4.4*** *Average Ambient Sound Level According to Location*

Location	*Average Ambient Sound Level (dBA)*
Business occupancies	54
Educational occupancies	45
Industrial occupancies	88
Institutional occupancies	50
Mercantile occupancies	40
Mechanical rooms	91
Piers and water-surrounded structures	40
Places of assembly	60
Residential occupancies	35
Storage occupancies	30
Thoroughfares, high-density urban	70
Thoroughfares, medium-density urban	55
Thoroughfares, rural and suburban	40
Tower occupancies	35
Underground structures and windowless buildings	40
Vehicles and vessels	50

Sound levels can be significantly reduced due to distance and losses through building elements. Every time the distance from the source doubles, the sound level decreases by about 6 decibels (dB). Audible notification appliances are typically rated by manufacturers' and testing agencies at 10 ft (3 m) from the appliance. Subsequently, at a distance of 20 ft (6.1 m) from an audible appliance rated at 84 dBA, the sound level might be reduced to 78 dBA. At a closed door, the loss might be about 10 dB to 24 dB or more depending on construction. If the opening around the door is sealed, this might result in a loss of 22 dB to 34 dB or more.

FAQ What do the values in Table A.18.4.4 represent?

The *average ambient sound levels* shown in Table A.18.4.4 are defined in 3.3.30 as "the root mean square, A-weighted, SPL measured over the period of time that any person is present, or a 24-hour period, whichever time period is the lesser." This A-weighted RMS value can be experimentally determined (measured) for a particular occupancy by using an integrating, averaging, SPL meter. Exhibit 18.10 shows two examples of meters that can be used to measure the total integrated SPL in dBA or to analyze the dB at specific frequency bands (see 18.4.7). These particular meters can also be used to measure the voice intelligibility score discussed in the sections on speech intelligibility. The suggested value of 88 dBA for industrial occupancies is only an example, as are all the other table entries. Some industrial occupancies might have an average ambient sound level that exceeds this value, and others might be lower. Based on the average ambient sound level of 88 dBA, the audible notification appliances would need to deliver 103 dBA throughout the space. Exhibits 18.11 and 18.12 show examples of audible notification appliances for high ambient noise areas, such as might be found in some mechanical rooms or some industrial occupancies.

Measurements taken in a large sampling of hotel rooms with through-the-wall air-conditioning units determined that the average ambient sound level in those rooms with the air conditioners operating was 55 dBA.

EXHIBIT 18.10

Combination Sound Pressure Level Meter/Analyzer and Speech Intelligibility Meter (left) and XL2 Audio and Acoustic Analyzer Displaying Basic STI-PA Result (right). [Sources: (left) Gold Line, West Redding, CT; (right) NTI Americas, Tigard, OR]

18.4.4.1* To ensure that audible public mode signals are clearly heard, unless otherwise permitted by 18.4.4.2 through 18.4.4.5, they shall have a sound level at least 15 dB above the average ambient sound level or 5 dB above the maximum sound level having a duration of at least 60 seconds, whichever is greater, measured 5 ft (1.5 m) above the floor in the area required to be served by the system using the A-weighted scale (dBA).

EXHIBIT 18.11

Audible Notification Appliance for High Ambient Noise Areas. (Source: Signal Communications Corp., Woburn, MA)

EXHIBIT 18.12

Cluster Loudspeakers. (Source: Eaton, Long Branch, NJ)

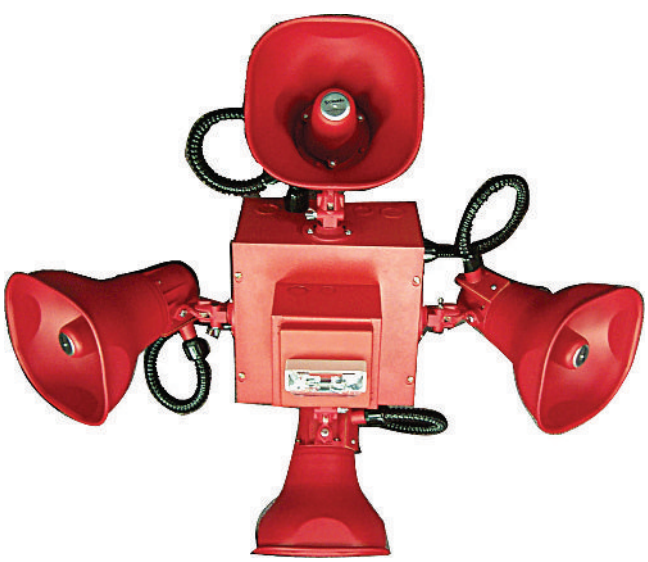

The source of the maximum ambient sound level for each occupancy must be selected carefully. The average ambient sound level is more difficult to determine than the maximum sound level that lasts at least 60 seconds. Note that in acoustics, the maximum sound level is not the peak sound level. The maximum sound level in this case is the maximum RMS value that lasts at least 60 seconds. Exhibit 18.13 shows a sample 24-hour noise survey for public mode. The 24-hour average is 55 dBA versus 65 dBA for the occupied period (6:00 a.m. until 6:00 p.m.). The 60-second max is 71 dBA.

For the 24-hour average:

Ave + 15 dB = 55 dBA + 15 dB = 70 dBA
60-second max + 5 dB = 71 dBA + 5 dB = 76 dBA

The 60-second max of 76 dBA governs.

For the occupied period:

Ave + 15 dBA = 65 dBA + 15 dB = 80 dBA
60 second max + 5 dBA = 71 dBA + 5 dB = 76 dBA

The average of 80 dBA governs.

The definition of the term *average ambient sound level* in 3.3.30 specifies that the average is over the "time that any person is present, or a 24-hour period, whichever time period is the lesser." Measurements are made at 5 ft (1.5 m) above the floor to reduce the effects of sound wave reinforcement and cancellation due to walls and surfaces. Additional appliances might be required so that the signal will be heard clearly throughout the target area.

System Design Tip

As a practical matter, measurement of the average ambient sound level as defined in 3.3.30 is rarely done. To do this would require that the meter, or at least the microphone leading to the meter, be placed at the measurement location for the duration of the occupied period. In most occupancies, the occupied period is between 10 and 24 hours. The meter or microphone would then have to be moved to the next measurement location and another measurement taken. Instead, most designers will use the table as a guide and consider field measurements of the expected maximum sound level lasting 60 seconds or more. For projects that have not yet been constructed, the table, along with experience, is the best guide for a design.

System Design Tip

Audible appliance ratings, as measured by the manufacturer and qualified testing laboratories, are specified as a decibel rating at a predetermined distance, usually 10 ft (3 m). The rule of thumb is that the output of an audible notification appliance is reduced by 6 dB if the distance between the appliance and the listener is doubled. Similarly, if the distance is cut in half, the SPL is increased by 6 dB. The accuracy of this rule depends on many intervening variables, particularly the acoustic properties of the materials in the listening space, such as ceiling materials and floor and wall coverings. The use of the appliance's rating along with this rule allows system designers to estimate audible levels in occupiable spaces before a system is installed. See Exhibit 18.14 for an example of how this rule of thumb is applied.

Situations that are more complex require calculating sound attenuation through doors and walls, which is a procedure outside the scope of this handbook. See *the SFPE Handbook of Fire Protection Engineering* for appropriate calculation methods.

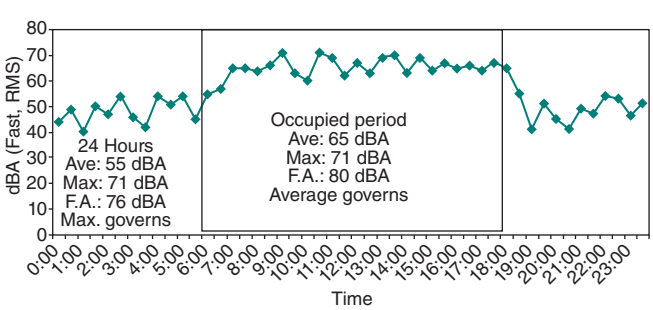

EXHIBIT 18.13

Sample Noise Survey. (Source: R. P. Schifiliti Associates, Inc., Reading, MA)

EXHIBIT 18.14

Estimating Audible Levels Using 6 dB Rule of Thumb Method. (Source: R. P. Schifiliti Associates, Inc., Reading, MA)

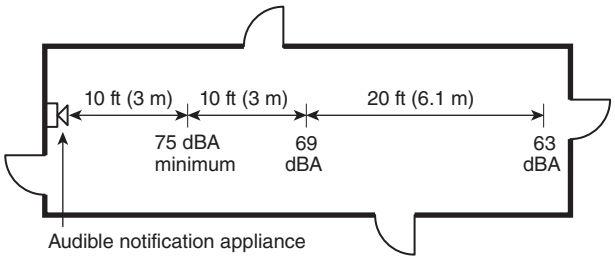

Δ **A.18.4.4.1** Audio levels are commonly measured using units of decibels, or 1/10 Bell, abbreviated dB. When measured using a sound level meter, the operator can select either an A-weighted, B-weighted, or C-weighted measurement. The C-weighted measurement is nominally flat from 70 Hz to 4000 Hz, and the B-weighted measurement is nominally flat from 300 Hz to 4000 Hz. The A-weighted measurement filters the input signal to reduce the measurement sensitivity for frequencies to which the human ear is less sensitive and is relatively flat from 600 Hz to 7000 Hz. This results in a measurement that is weighted to simulate the segment of the audio spectrum that provides the most significant intelligibility components heard by the human ear. The units used for measurement are still dB, but the shorthand for specifying use of the A-weighted filter is typically dBA. The difference between any two sound levels measured on the same scale is always expressed in units of dB, not dBA.

The constantly changing nature of pressure waves, which are detected by ear, can be measured by electronic sound meters, and the resulting electronic waveforms can be processed and presented in a number of meaningful ways. Most simple sound level meters have a fast or slow time constant (125 ms and 1000 ms, respectively) to quickly average a sound signal and present a root mean square (RMS) level to the meter movement or display. This is the type of measurement used to determine the maximum sound level having a duration of at least 60 seconds. Note that Chapter 14 requires this measurement to be made using the FAST time setting on the meter. However, this quick average of impressed sound results in fast movements of the meter's output that are best seen when talking into the microphone; the meter quickly rises and falls with speech. However, when surveying the ambient sound levels to establish the increased level at which a notification appliance will properly function, the sound source needs to be averaged over a longer period of time. See 3.3.30, Average Ambient Sound Level. Moderately priced sound level meters have such a function, usually called L_{eq} or equivalent sound level. For example, an L_{eq} of speech in a quiet room would cause the meter movement to rise gradually to a peak reading and slowly fall well after the speech is over. L_{eq} measurements are made over a specified time period and reported as $L_{eq,t}$, where t is the time period. For example, a measurement taken over 24 hours is reported as L_{eq24}.

L_{eq} readings can be misapplied in situations where the background ambient noises vary greatly during a 24-hour period. L_{eq} measurements should be taken over the period of occupancy. This is clarified by the definition of average ambient sound level *(see 3.3.30)*. Note that average in this context is the integrated average at a particular measurement location, not the average of several readings taken at different locations. For example, it would be incorrect to take a reading in a quiet bathroom and average it with a reading taken near a noisy machine to get an average to use for the alarm signal design. The alarm would probably be excessively loud in the quiet bathroom and not loud enough near the noisy machine.

In areas where the background noise is generated by machinery and is fairly constant, a frequency analysis can be warranted. It might be found that the high sound levels are predominantly in one or two frequency bandwidths — often lower frequencies. Notification appliances producing sound in one or two other frequency bandwidths can adequately

penetrate the background noise and provide notification. The system would still be designed to produce or have a sound level at the particular frequency or frequency bandwidth of at least 15 dB above the average ambient sound level or 5 dB above the maximum sound level having a duration of at least 60 seconds, whichever is greater.

In very high noise areas, such as theaters, dance halls, nightclubs, and machine shops, sound levels during occupied times can be 100 dBA and higher. Peak sounds might be 110 dBA or greater. At other occupied times, the sound level might be below 50 dBA. A system designed to have a sound level of at least 15 dB above the average ambient sound level or 5 dB above the maximum sound level having a duration of at least 60 seconds might result in a required sound pressure level in excess of the maximum of 115 dBA. A viable option is to reduce or eliminate the background noise. Professional theaters or other entertainment venues can have road show connection control units *(see Section 520.50* of *NFPA 70)* to which troupes can connect their light and sound systems. These power sources can be controlled by the system. In less formal applications, such as many nightclubs, designated power circuits could be controlled. Diligence needs to be exercised to ensure that the controlled circuits are used.

Also, in occupancies such as machine shops or other production facilities, care must be exercised in the design to ensure that the removal of power to the noise source does not create some other hazard. As with other emergency control functions, control circuits and relays would be monitored for integrity in accordance with Chapter 10, Chapter 12, and Chapter 23.

Appropriate audible signaling in high ambient noise areas is often difficult. Areas such as automotive assembly areas, machining areas, paint spray areas, and so on, where the ambient noise is caused by the manufacturing process itself, require special consideration. Adding additional audible notification appliances that merely contribute to the already noisy environment might not be appropriate. Other alerting techniques such as visual notification appliances, for example, could be more effectively used.

Other codes, standards, laws, or regulations, and the authority having jurisdiction determine where a signal must be audible. This Code section describes the performance requirement needed for a signal to be considered reliably audible.

18.4.4.2 Where approved by the authority having jurisdiction or other governing codes or standards, the requirements for audible signaling shall be permitted to be reduced or eliminated when visual signaling is provided in accordance with Section 18.5.

FAQ What conditions must be satisfied to reduce or eliminate audible signaling?

Audible signaling can be reduced or eliminated only where permitted by the authority having jurisdiction or other governing codes or standards, and only where public or private mode visual signaling is provided. Use of this allowance should be for cases specifically addressed by an occupancy code or where supported by careful evaluation of the special conditions that warrant its use.

Part of the explanation in A.18.4.4.1 discusses reducing or eliminating ambient noises by using control circuits. However, eliminating ambient noise that is primarily caused by operating equipment in locations such as manufacturing facilities is not always possible. Removal of power to the equipment to reduce noise could introduce other hazards. Refer to 18.4.5.2 and A.18.4.5.2 for additional insight.

Δ **18.4.4.3** Audible notification appliances installed in elevator cars shall be permitted to use the audibility criteria for private mode appliances detailed in 18.4.5.1.

Elevator cars are not required to have audible appliances. If they do, the audible appliances can be designed to operate at the lower sound levels that are permitted for private mode signaling. For a

protected premises fire alarm system, 23.8.6.2 states that notification appliances are not required in elevator cars (or in exit stair enclosures and exit passageways) unless required by other codes and standards. Even if they are required by other codes and standards, 23.8.6.2.3 and 23.8.6.2.4 explicitly state that the signal is not required to operate automatically in exit stair enclosures and exit passageways or in elevator cars. Similarly, for in-building fire emergency voice/alarm communications systems (EVACSs), 24.4.8.5 permits audible appliances to be installed, but requires that the evacuation signal not operate in the elevators. This permits loudspeakers to be installed and used for manual communication to elevator occupants.

Δ **18.4.4.4** If approved by the authority having jurisdiction, audible notification appliances installed in restrooms shall be permitted to use the audibility criteria for private mode appliances detailed in 18.4.5.1.

System Design Tip

Note the difference between 18.4.4.3, which applies to elevators, and 18.4.4.4, which applies to restrooms. The requirement for elevators states that audible appliances in elevators "shall be permitted" to use the audibility criteria for private mode. This means that the designer has a choice and that the authority having jurisdiction will permit the application. The requirement for restrooms states, "if approved by the authority having jurisdiction." This means that the designer has a choice, but that approval of the authority having jurisdiction is required.

18.4.4.5 A signaling system arranged to stop or reduce ambient noise shall comply with 18.4.4.5.1 through 18.4.4.5.3.

Where acceptable to the authority having jurisdiction, reducing the background noise is a viable alternative to providing a fire alarm system with a high level of audio output. In venues such as nightclubs, concert halls, and theaters, an advisable action is to stop the background noise and control the lighting to create a sudden and noticeable change in the environment that will get people's attention.

18.4.4.5.1 A signaling system arranged to stop or reduce ambient noise shall produce a sound level at least 15 dB above the reduced average ambient sound level or 5 dB above the maximum sound level having a duration of at least 60 seconds after reduction of the ambient noise level, whichever is greater, measured 5 ft (1.5 m) above the floor in the area required to be served by the system using the A-weighted scale (dBA).

18.4.4.5.2 Visual notification appliances shall be installed in the affected areas in accordance with Sections 18.5 or 18.6.

18.4.4.5.3 Relays, circuits, or interfaces necessary to stop or reduce ambient noise shall meet the requirements of Chapters 10, 12, 21, and 23.

18.4.5 Private Mode Audible Requirements.

18.4.5.1* To ensure that audible private mode signals are clearly heard, they shall have a sound level at least 10 dB above the average ambient sound level or 5 dB above the maximum sound level having a duration of at least 60 seconds, whichever is greater, measured 5 ft (1.5 m) above the floor in the area required to be served by the system using the A-weighted scale (dBA).

A.18.4.5.1 See A.18.4.4.1 for additional information on sound measurements and weighting scales.

18.4.5.2* Where approved by the authority having jurisdiction or other governing codes or standards, the requirements for audible signaling shall be permitted to be reduced or eliminated when visual signaling is provided in accordance with Section 18.5.

A.18.4.5.2 For example, in critical care patient areas, it is often desirable to not have an audible notification even at reduced private mode levels. Each case requires consideration by the governing authority. Another example would be high noise work areas where an audible signal needed to overcome background noise at one time of day would be excessively loud and potentially dangerous at another time of lower ambient noise. A sudden increase of more than 30 dB over 0.5 seconds is considered to cause sudden and potentially dangerous fright.

A hospital patient care area is one example of where a code or an authority having jurisdiction can permit private mode signaling. The public occupants include patients who might not be able to respond to a fire alarm signal. In some cases, alerting them directly with audible (and possibly visual) signals might even be dangerous. For this reason, the system is designed to alert trained staff.

Areas that use private mode signaling (e.g., certain areas in a hospital) often have a less intense average ambient sound level and a low maximum sound level, making the reduced level cited in 18.4.5.1 appropriate. In the delivery of private mode signals, the sound level of the audible notification appliance is to be adequate but not so loud as to startle the occupants or staff. Low audible levels are permitted because part of the staff's duties is to listen for and respond appropriately to the fire alarm signals. In addition, they must communicate with each other when implementing emergency procedures; a loud alarm might interfere with that communication.

In a few cases, such as operating rooms or critical care patient areas, other codes and authorities having jurisdiction may permit elimination of audible (and possibly visual) signaling altogether.

18.4.5.3 A system arranged to stop or reduce ambient noise shall comply with 18.4.5.3.1 through 18.4.5.3.3.

18.4.5.3.1 A system arranged to stop or reduce ambient noise shall be permitted to produce a sound level at least 10 dB above the reduced average ambient sound level or 5 dB above the maximum sound level having a duration of at least 60 seconds after reduction of the ambient noise level, whichever is greater, measured 5 ft (1.5 m) above the floor, using the A-weighted scale (dBA).

18.4.5.3.2 Visual notification appliances shall be installed in the affected areas in accordance with Sections 18.5 or 18.6.

18.4.5.3.3 Relays, circuits, or interfaces necessary to stop or reduce ambient noise shall meet the requirements of Chapters 10, 12, 21, and 23.

18.4.6 Sleeping Area Requirements.

18.4.6.1* Where audible appliances are installed to provide signals for sleeping areas, they shall have a sound level of at least 15 dB above the average ambient sound level or 5 dB above the maximum sound level having a duration of at least 60 seconds or a sound level of at least 75 dBA, whichever is greater, measured at the pillow level in the area required to be served by the system using the A-weighted scale (dBA).

A.18.4.6.1 See A.18.4.4.1 for additional information on sound measurements and weighting scales.

FAQ

What additional condition must be satisfied for sleeping areas, compared with the requirements in 18.4.4.1?

Paragraph 18.4.6.1 requires that the sound level delivered by the audible notification system in rooms where people sleep be either 15 dB above the average ambient sound level, 5 dB above any maximum sound level lasting 60 seconds or more, or at least 75 dBA, whichever is greatest. Paragraph 18.4.4.1 does not require a minimum sound level.

System Design Tip

If the average ambient sound level in the sleeping area is 40 dBA, then the audible notification appliances must deliver at least 75 dBA (40 dBA + 15 dB = 55 dBA, which is less than the 75 dBA minimum). If the average ambient sound level in the sleeping area is 65 dBA, then the audible notification appliances must deliver at least 80 dBA (65 dBA + 15 dB = 80 dBA).

The 75 dBA level was originally intended for people without hearing impairments and without incapacitation due to drugs, alcohol, or exhaustion. However, research led to the requirement in 18.4.6.3 for using a 520 Hz tone that was found effective for persons with hearing impairments or with mild alcohol intoxication. A certain SPL does not instantly awaken all test subjects. There is a distribution of time to alert some or all of the occupants. The time it takes to awaken someone and the time it takes for that person to act must be considered by designers with respect to the development of hazardous conditions. The available safe egress time (ASET) is typically defined as the time from detection of a fire to the time that hazardous conditions exist. However, as noted above, there may be a lag between detection, activation of notification appliances, and the actual time at which a person is alerted and aware of the need to act.

18.4.6.2 If any barrier, such as a door, curtain, or retractable partition, is located between the notification appliance and the pillow, the sound pressure level shall be measured with the barrier placed between the appliance and the pillow.

Although 18.4.6.2 applies only to sleeping areas, the worst-case conditions should be used for all ambient and alarm sound level measurements. Determining the worst case might include testing with doors and other barriers both opened and closed. However, it is not necessary to open a door to get the worst-case noise and then close the door to get the worst-case alarm level — or vice versa. Instead, the difference between ambient and alarm can be measured with the door open and then again with the door closed to ensure that the required levels are met in both situations.

The sound loss going through a bedroom door varies based on construction features and undercut. In many cases, the required 75 dBA in the bedroom might not be attainable using an appliance outside of the bedroom. In other situations it might be possible, but the resulting sound level near the audible appliance might exceed the maximum of 110 dBA permitted by 18.4.1.2.

18.4.6.3* Audible appliances provided for the sleeping areas to awaken occupants shall produce a low frequency alarm signal that complies with the following:

(1) The waveform shall have a fundamental frequency of 520 Hz ± 10 percent.
(2)* The notification equipment shall be listed for producing the low frequency waveform.

EXHIBIT 18.15

Low Frequency Audible Appliance. (Source: Edwards, Mebane, NC)

The low frequency signal is required only when the audible appliance is sounded to awaken people. For example, in a hospital the signal is not intended to awaken patients and would not have to have the low frequency content. However, in a room where staff sleep, the low frequency signal would be required. See the accompanying Closer Look feature for information on the research behind the 520 Hz low frequency signal.

Exhibit 18.15 shows a low frequency audible appliance. It is similar in appearance to other audible appliances except for the "520 Hz" front label, which makes identification easier during an inspection. This label would not be permitted under the listing process unless the performance had been verified by the listing agency. The product nameplate and specifications should be checked to determine whether the appliance is listed to produce the correct low frequency signal.

For the 2019 edition, the requirement to use a square-wave source signal has been deleted from the Code because such specifications are enforced through the listing standards.

Closer Look

The Low Frequency 520 Hz Signal

A Fire Protection Research Foundation (FPRF) research project (*Optimizing Fire Alarm Notification for High Risk Groups*) and the resultant reports (*Waking Effectiveness of Alarms for Adults Who Are Hard of Hearing*; and *Waking Effectiveness of Alarms for the Alcohol Impaired*) have led to requirements for tones used to awaken people. Editions of the Code before 2013 had not specified a particular frequency content for audible tones. Most fire alarm and smoke alarm tones use sounders that produce high frequency tones on the order of 3150 Hz. That frequency band is also the one at which most adults experience hearing loss. The research project has shown that a low frequency 520 Hz signal can awaken and alert people with hearing loss and alcohol-impaired adults.

The use of loudspeakers and amplifiers that provide voice capability is one way to accommodate this need. Other hardware solutions can also be used. (Chapter 29, Single- and Multiple-Station Alarms and Household Signaling Systems, has the same low frequency signal requirement for residential protection. Refer to 29.5.10 for the requirements and conditions that apply in household applications.)

In the case of a loudspeaker, although the "520 Hz" front label is a good indicator that the particular loudspeaker is capable of producing the low frequency waveform, it is also necessary to verify that the tone and delivery infrastructure is listed in accordance with 18.4.6.3. Paragraph 18.4.6.3(2) requires notification equipment to be listed. Typically, this will require review and listing by the listing agency of the in-building fire EVACS itself, including the tone generator, pre-amp, amplifier, NAC card (module), loudspeaker circuit (NAC), and loudspeaker. The product listing and manufacturer's published instructions will stipulate specific loudspeaker models that can be used. Substituting a different model of loudspeaker not in the manufacturer's published instructions may not comply with the listing as required by 18.4.6.3(2).

Exhibit 18.16 shows a smoke detector with a sounder base listed for producing the 520 Hz low frequency audible signal. Smoke detectors with sounder bases are often used in spaces such as hotel rooms and apartments. The detector/base is connected to the building FACU and can be activated to signal a fire alarm from any building fire alarm initiating device. The combined detector and sounder base might also be programmed to act as a substitute of the required single- or multiple-station smoke alarm (see Chapter 29). See also A.18.4.6.3(2).

EXHIBIT 18.16

Smoke Detector with Low Frequency Sounder Base. (Source: Hochiki America Corp., Buena Park, CA)

A.18.4.6.3 The intent of this section is to require the use of the low frequency signal in areas intended for sleeping and in areas that might reasonably be used for sleeping. For example, this section requires a low frequency audible signal in a bedroom of an apartment and also in the living room area of an apartment as it might have sleeping occupants. However, it would not be required to use the low frequency signal in the hallways, lobby, and other tenantless spaces. In hotels, the guest rooms would require use of the low frequency signals, but other spaces that might require audible signals could use any listed audible appliances regardless of the frequency content of the signal being produced. This chapter of the Code addresses notification appliances connected to and controlled by a fire alarm or emergency communications system. This chapter does not address dwelling unit protection such as smoke alarms and their audible signal characteristics. Requirements for single- and multiple-station alarms and household fire alarm systems can be found in Chapter 29.

It is not the intent of this section to preclude devices that have been demonstrated through peer-reviewed research to awaken occupants with hearing loss as effectively as those using the frequency and amplitude specified in this section.

Non-voice (e.g., horns) notification appliances should be listed as a "low frequency alarm" alarm appliance. Voice appliances and systems should be capable of 520 Hz ±10 percent with the appropriate harmonics.

For increased protection in the sleeping area, tactile notification in accordance with Section 18.10 might be an effective means of awakening those who have normal hearing, as well as those who are hearing impaired.

A.18.4.6.3(2) For the purposes of awakening, the low frequency signal can be produced by a listed stand-alone appliance or by a listed system consisting of a recorded waveform delivered through an amplifier and loudspeaker.

18.4.7* Narrow Band Tone Signaling for Exceeding Masked Thresholds.

A.18.4.7 This subsection permits a more rigorous analysis and design for audible signaling. Acoustic design practice and psychoacoustic research have long recognized that for a signal to be audible, it need only penetrate the background noise in a one-third or a one octave band. The averaging resulting from A-weighted analysis and design is a simplification that often results in systems being overdesigned. This overdesign is not dangerous but can be costly and is certainly not needed for effective system performance.

18.4.7.1 Masked Threshold Allowance. Audible tone signaling shall be permitted to comply with the masked threshold requirements in this subsection in lieu of the A-weighted signaling requirements in 18.4.4 and 18.4.5.

18.4.7.2* Calculation Method. The effective masked threshold shall be calculated in accordance with ISO 7731, *Danger signals for public and work places — Auditory danger signals*.

A.18.4.7.2 Noise at a lower frequency can mask a signal at an adjacent higher frequency. Thus, it is necessary to calculate the effective masked level of the noise in accordance with established procedures. Figure A.18.4.7.2 shows an example of an octave band analysis of noise along with the calculated effective masked threshold and the proposed alarm signal.

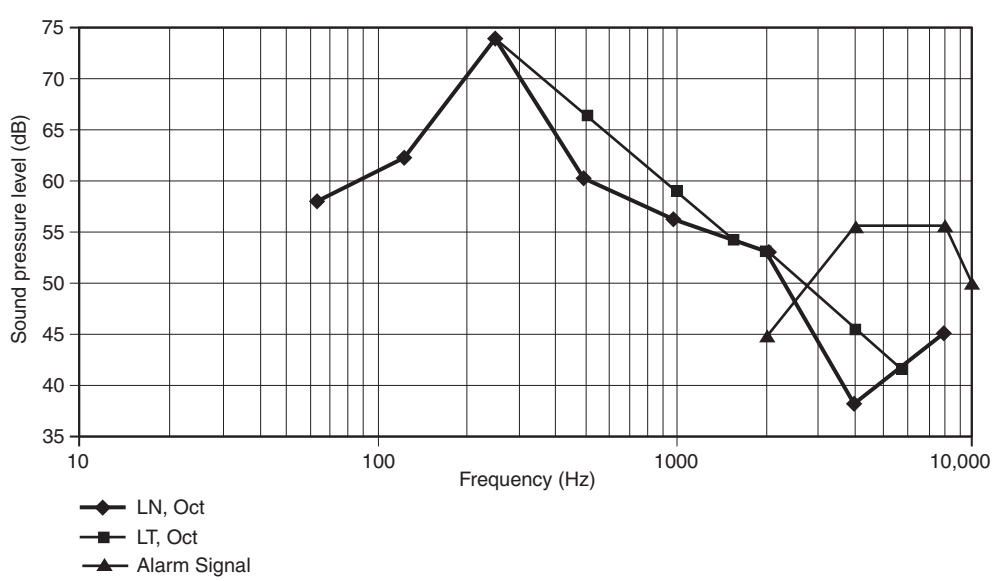

At the first octave band center frequency, the masked threshold of hearing, LT, Oct is equal to the noise level. For each subsequent center frequency, LT, Oct is the greater of either the noise level at that octave band, LN, Oct, or the masked threshold of the previous band less 7.5 dB.

FIGURE A.18.4.7.2 *Threshold Masking Level Example.*

The effective masked threshold can be thought of as the adjusted ambient noise. The actual ambient noise level is adjusted to account for the masking effect that a lower frequency band has on a higher, adjacent frequency band. If an octave band analysis is done, the masked noise level can be calculated. Starting at the lowest octave band, move up (to the right) to the next octave band. The masked level is either the actual measured noise level or the noise level of the adjacent lower band minus 7.5 dB, whichever is greater. For a one-third octave band analysis, the masked level is either the actual measured noise level or the noise level of the adjacent lower band minus 2.5 dB, whichever is greater.

The example of narrow band signaling, shown in Figure A.18.4.7.2, uses a line plot for the noise and the masked threshold signal. This illustrates that the masking of a higher frequency by a lower frequency results in a minimum slope of –7.5 dB per octave. This masking level is specified in ISO 7731, *Danger Signals for Work Places — Auditory Danger Signals*. Also, refer to the defined terms *effective masked threshold* in 3.3.84 and *octave band* and *one-third octave band* in 3.3.188 and 3.3.188.1.

For example, see the commentary following 18.4.7.5.2. Exhibit 18.7 illustrates the one-third octave band data from Commentary Table 18.3. The noise level in the lowest band (25 Hz) is 71 dB. In the next band (32 Hz), the noise level is 73 dB. The masked level in the 32 Hz band is either the actual measured noise level (73 dB) or the masked noise level of the adjacent lower band minus 2.5 dB (71 dB − 2.5 dB = 68.5 dB), whichever is greater. In the 500 Hz band, the noise is 80 dB. Therefore, the masked level is either the actual measured noise level (80 dB) or the masked noise level of the adjacent lower band minus 2.5 dB (83 dB − 2.5 dB = 80.5 dB), whichever is greater.

18.4.7.3 Noise Data. Noise data for calculating the effective masked threshold shall be the peak value of noise lasting 60 seconds or more for each octave or one-third octave band.

One should use the maximum value that lasts 60 seconds or more. See the commentary following 18.4.4.1.

18.4.7.4 Documentation. Analysis and design documentation shall be submitted to the authority having jurisdiction and shall contain the following information:

(1) Frequency data for the ambient noise, including the date, time, and location where measurements were taken for existing environments, or projected data for environments not yet constructed
(2) Frequency data of the audible notification appliance
(3) Calculations of the effective masked threshold for each set of noise data
(4) A statement of the sound pressure level that would be required by 18.4.4 or 18.4.5 if masked threshold signaling had not been done

18.4.7.5 Sound Pressure Level. For masked threshold signaling, the audible signal tone shall meet the requirements of either 18.4.7.5.1 or 18.4.7.5.2 but not for the reproduction of prerecorded, synthesized, or live messages.

18.4.7.5.1 The sound pressure level of the audible tone signal shall exceed the masked threshold in one or more octave bands by at least 10 dB in the octave band under consideration.

18.4.7.5.2 The sound pressure level of the audible tone signal shall exceed the masked threshold in one or more one-third octave bands by at least 13 dB in the one-third octave band under consideration.

The human ear can discriminate distinct frequency bands. Commentary Table 18.3 shows noise data for a particular compressor room one-third octave band (unweighted) and the resulting calculated masked threshold. Bold entries show frequency bands where the masked level is greater than the measured noise level.

The total integrated SPL (L_P) is 92 dB (unweighted). When adjusted for the way the human ear hears different frequencies, the total A-weighted SPL (L_A) is shown as 88 dBA. The maximum SPL is approximately 84 dB at 315 Hz. If these data were the average ambient sound level in the space, 18.4.4.1 would require a fire alarm signal of 88 dBA + 15 dB = 103 dBA.

Commentary Table 18.4 shows the dominant frequency distribution of a typical piezo-electric fire alarm sounder. The data have been adjusted using the 6 dB rule (see Exhibit 18.17) for the distance from the planned mounting location to the point where the noise data in Commentary Table 18.3 were measured.

COMMENTARY TABLE 18.3 *Compressor Room One-Third Octave Noise Data and Calculated Masked Threshold*

Center Frequency (Hz)	Noise (dB)	Masked Threshold (dB)	Center Frequency (Hz)	Noise (dB)	Masked Threshold (dB)	Center Frequency (Hz)	Noise (dB)	Masked Threshold (dB)
25	71	71.0	315	84	84.0	**4,000**	**68**	**68.5**
32	73	73.0	400	83	83.0	5,000	69	69.0
40	72	72.0	**500**	**80**	**80.5**	6,300	67	67.0
50	74	74.0	**630**	**76**	**78.0**	8,000	66	66.0
63	76	76.0	800	78	78.0	10,000	64	64.0
80	75	75.0	1,000	77	77.0	12,500	63	63.0
100	78	78.0	1,250	79	79.0	16,000	67	67.0
125	79	79.0	1,600	78	78.0	20,000	65	65.0
160	80	80.0	2,000	76	76.0	L_P	92	
200	80	80.0	**2,500**	**70**	**73.5**	L_A	88	
250	81	81.0	**3,150**	**65**	**71.0**			

Source: R. P. Schifiliti Associates, Inc., Reading, MA.

COMMENTARY TABLE 18.4 *Dominant Frequency Distribution of Typical Piezo-Electric Fire Alarm Sounder*

Center Frequency (Hz)	Alarm (dB)
1,600	30
2,000	36
2,500	73
3,150	85
4,000	67
5,000	49
L_P	85
L_A	87

Source: R. P. Schifiliti Associates, Inc., Reading, MA.

FAQ

In the example provided, how do the results of the one-third octave band analysis compare to the result in the preceding paragraphs, using the requirements of 18.4.4.1?

Exhibit 18.17 uses a bar graph to show the noise, the threshold masked level, and the fire alarm signal. The noise and resulting threshold masked level can be thought of as a picket fence trying to obscure our view of the fire alarm signal. To know that the fire alarm signal is there, we need only "see" one of its pickets behind the adjusted noise data (threshold masked level).

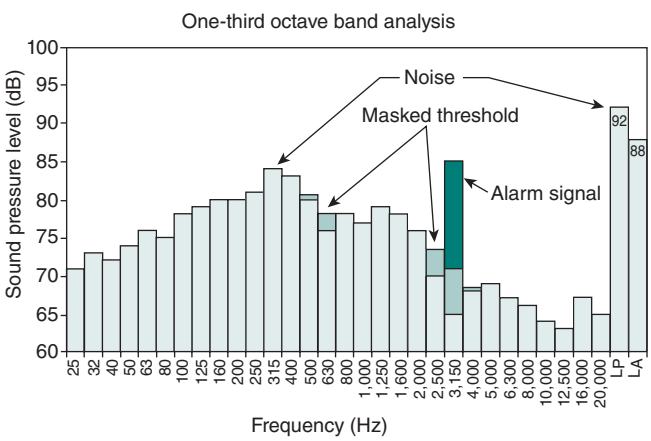

EXHIBIT 18.17

Noise Data, Threshold Masked Level (Adjusted Noise Data), and Fire Alarm Signal. (Source: R. P. Schifiliti Associates, Inc., Reading, MA)

In this example, the noise measured at 3150 Hz is 65 dB, but the masked threshold at that frequency is 71 dB (73.5 at the previous band minus 2.5). The fire alarm signal produces 85 dB at 3150 Hz, resulting in a signal-to-noise ratio of 14 dB. This ratio meets the requirement of 18.4.7.5.2 for a minimum 13 dB for one-third octave band signaling.

Measured using an integrating meter set to the A scale, this system would not meet the requirements. However, using a one-third octave band analysis, the system passes.

18.4.8 Exit Marking Audible Notification Appliance Requirements.

Refer to the definition of the term *exit marking audible notification appliance* in 3.3.182.1.1. Exit marking audible notification systems use sound to direct occupants to exits. The intent is for the sound to be directional, allowing the occupant to identify the location, direction, and origin of the sound. To accomplish this, the signal must have very specific characteristics. The performance-based requirements are derived from research on directional sound.

18.4.8.1* Exit marking audible notification appliances shall meet or exceed the frequency and sound level settings and guidelines specified in the manufacturer's documented instructions.

A.18.4.8.1 The sound content of directional sounders is very different from that of the traditional fire alarm audible notification appliances. Traditional fire alarm audible notification appliances have a strong tonal content, usually centered near the 3 kHz region. Directional sounders use broadband frequency content, usually covering most of the human audible frequency range, 20 Hz to 20 kHz. Figure A.18.4.8.1(a) compares the frequency content of a traditional fire alarm audible notification appliance to a directional sounder. This figure shows that while the fire alarm audible notification appliance clearly dominates the 3 kHz and upper harmonics, the broadband content of the directional sounder is 20 dB to 30 dB in other frequency bands or ranges. The fire alarm has an overall A-weighted sound level greater than the directional sounder and will be perceived as being louder. However, since the directional sounder has a wide spectral range, the signal penetrates the fire alarm signal in several other frequency bands as permitted by 18.4.7.

There are three main types of information that allow the brain to identify the location of a sound. The first two are known as binaural cues because they make use of the fact that we

have two ears, separated by the width of our head. A sound that emanates from either side of the mid-line will arrive first at the ear closer to it and will be loudest at the ear closer to it. At low frequencies the brain recognizes differences in the arrival time of sound between the ears (interaural time differences). At higher frequencies the salient signal is the loudness/intensity difference between the sounds at each ear (interaural intensity differences). Refer to Figure A.18.4.8.1(b). For single frequencies, these cues are spatially ambiguous.

The inherent ambiguity has been described as the "cone of confusion." This arises from the fact that for any given frequency there are numerous spatial positions that generate identical timing/intensity differences. These can be graphically represented in the form of a cone, the apex of which is at the level of the external ear. The cone of confusion is the main reason for our not being able to localize pure tones.

The final piece of sound localization information processed by the brain is the head-related transfer function (HRTF). The HRTF refers to the effect the external ear has on sound. As a result of passing over the bumps or convolutions of the pinna, the sound is modified so that some frequencies are attenuated and others are amplified. Refer to Figure A.18.4.8.1(c). Although there are certain generalities in the way the pinnae modify sound, the HRTF is unique to each individual. The role of the HRTF is particularly important when determining whether a sound is in front of or behind us. In this instance the timing and intensity differences are negligible, and there is consequently very little information available to the central nervous system on which to base this decision. To locate the direction of a sound source, the larger the frequency content to overcome the ambiguities inherent to single tones, the better the accuracy.

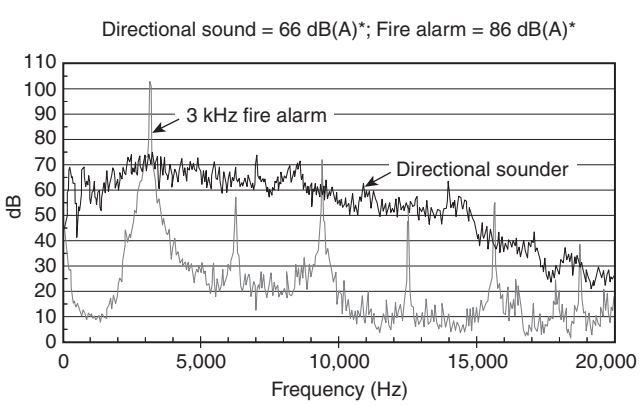

* Measured at 10 ft in an anechoic room.

FIGURE A.18.4.8.1(a) *Comparison of Frequency Content of a Traditional Fire Alarm Audible Notification Appliance to a Directional Sounder.*

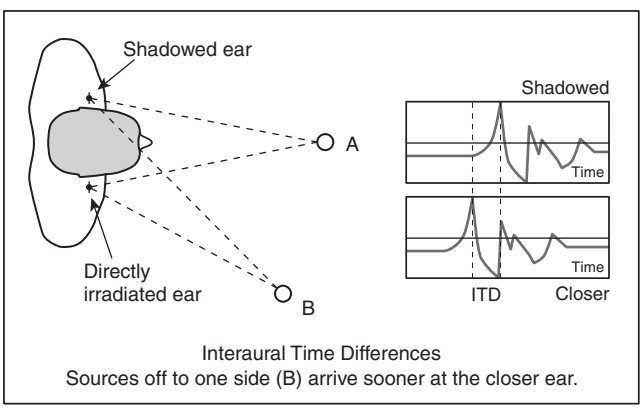

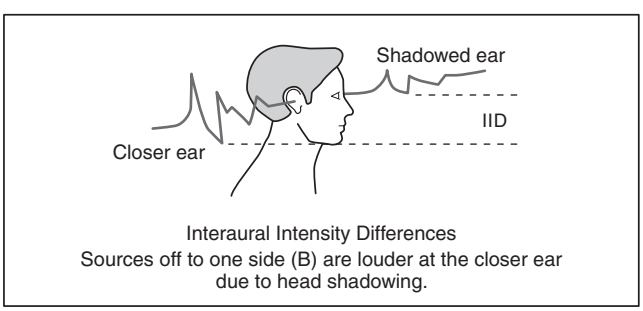

FIGURE A.18.4.8.1(b) *Interaural Time and Intensity Differences of Sound.*

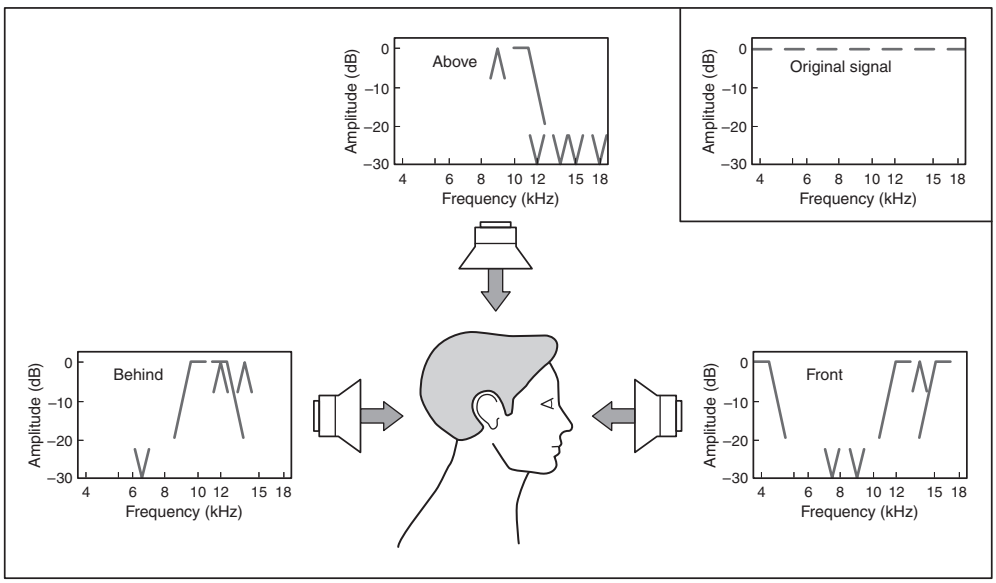

FIGURE A.18.4.8.1(c) *Examples of Frequency-Dependent Attenuation for Sources in Front, Above, and Behind Listener.*

Δ **18.4.8.2*** In addition to 18.4.8.1, as a minimum, to ensure that exit marking audible notification appliance signals are clearly heard and produce the desired directional effects for 50 ft (15.24 m) within an unobstructed egress path, they shall meet the audibility requirements of 18.4.7 in at least one one-third octave band or one octave band within the effective frequency ranges of the interaural time difference (ITD), interaural level or intensity difference (ILD or IID), and anatomical transfer function or head-related transfer function (ATF or HRTF) localization cues.

A.18.4.8.2 *ITD*: A difference in arrival times of waveform features (such as peaks and positive-going zero crossings) at the two ears is known as the interaural time difference, or ITD. The binaural physiology is capable of using phase information from ITD cues only at low frequencies below about 1500 Hz. However, the binaural system can successfully register an ITD that occurs at a high frequency such as 4000 Hz if the signal is modulated. The modulation, in turn, must have a rate that is less than about 1000 Hz.

ILD: Comparison between intensities in the left and right ears is known as the interaural level difference, or ILD. ILD cues exist physically only for frequencies above about 500 Hz. They become large and reliable for frequencies above 3000 Hz, making ILD cues most effective at high frequencies.

ATF: The anatomical transfer function (ATF), also known as the head-related transfer function (HRTF), is used by listeners to resolve front–back confusion and to determine elevation. Waves that come from behind tend to be boosted in the 1000 Hz frequency region, whereas waves that come from the forward direction are boosted near 3000 Hz. The most dramatic effects occur above 4000 Hz.

These localization cues can be implemented simultaneously when the source signal is a broadband sound containing a range of low to high frequencies. For example, octave bands of 1 kHz (707–1414 Hz) for ITD, 4 kHz (2828–5856 Hz) for ILD, and 8 kHz (5657–11,314 Hz) for ATF would fall within the effective frequency ranges required in 18.4.7.

Additional information on sound localization and auditory localization cues is contained in the following article: http://www.aip.org/pt/nov99/locsound.html, I.1.2.16.1.

This web address is no longer active. It originally contained the following article: Hartmann, B., "How We Localize Sound," *Physics Today* 52, no. 11 (1999): 24.

The ability to pinpoint the location of a sound source is based on the physics of sound and the physiology of the human hearing mechanism. The brain processes a large amount of neural signals, some of which provide cues to the sound source's location. People are able to hear sound ranging from about 20 Hz to 20,000 Hz. Unfortunately, pure tones in this frequency range provide only limited localization information. The primary localization cues are provided by interaural time differences (ITDs) (lower frequencies), interaural intensity differences (IIDs) (mid to higher frequencies), and the head-related transfer function (HRTF) (higher frequencies). In enclosed spaces that can be somewhat reverberant, the precedence effect (PE) also provides directional information.

The interaural time difference (ITD) and interaural intensity difference (IID) are termed binaural cues because they depend on both ears separated by the width of the head. At lower frequencies (longer wavelength), the time delay between arriving sound signals is detectable. ITD is most evident in frequencies below about 500 Hz with clicks or short bursts of sound. At higher frequencies (shorter wavelength), the loudness/intensity differences between the ears is more noticeable because of partial shielding of the more distant ear by the head. IID is most evident for frequencies above 3000 Hz.

The head-related transfer function (HRTF) relies on the effect of the external ear on perceived sound. The HRTF describes the transforming effect of the head, torso, and external ear on sound as it travels from the sound source to the ear canals. The HRTF changes depending on sound source location, providing an additional localization cue. HRTF operates over a range of frequencies but seems to be most effective in the 5000 Hz to 10,000 Hz range. Combined with the listener's head motion, HRTF provides an independent localization method to complement ITD and IID capabilities.

The precedence effect (PE) is important for discriminating between the direct sound signal and reflected sound, a common situation within buildings. The ear is capable of discerning and fixating on the first sound received (line-of-sight direct signal) and disregarding later signals (reflected sound). The acoustical signal arriving first at the ears suppresses the ability to hear other signals (including reverberation) that arrive up to about 40 milliseconds after the initial signal.

All of the preceding cues are utilized simultaneously when the source signal is broadband sound containing a range of low and high frequencies, and when the sound arrives in bursts rather than as steady state sound. The combination of different cues provides reinforcement and redundancy of information to enhance the ability to locate the sound source. Broadband sound tends to eliminate potential ambiguities that occur for pure tone or narrowband sound sources.

Other types of sound patterns can be used as directional sounders that can be used for audible exit marking. Some scientific research has been performed to develop a directional sounder that utilizes a tonal sound different from the example above. As with the directional sound example presented above, the development of this alternative signal is similarly rooted in the vast research data that exists for sound localization and directional auditory cues.

An example of an alternative directional sound signal can be a sequence of two harmonic two-tone complexes. This sequence starts with a complex of low fundamental frequencies of 262 and 330 Hz having duration of 200 ms. This sound is then followed by a 200-ms silence. Next the sequence continues with a second sound that is a complex of low fundamental frequencies of 330 and 392 Hz having a duration of 200 ms. After another 200-ms silence, this whole pattern is repeated.

Localizability was ensured by the dense harmonic structure of the signal, with closely spaced harmonics up to 20 kHz. In addition sharp signal onsets were included to aid the detection of interaural time differences, thus increasing localizability.

N **18.4.8.3** The exit marking audible notification appliance signal shall penetrate both the ambient noise and the fire alarm signal.

18.4.8.4 Where required by the authority having jurisdiction governing laws, codes, or standards; or other parts of this Code, exit marking audible notification appliances shall be installed in accordance with the manufacturer's published instructions.

18.4.8.5* Where required by the authority having jurisdiction governing laws, codes, or standards; or other parts of this Code, exit marking audible notification shall be located at the entrance to all building exits and areas of refuge as defined by the applicable building or fire code.

A.18.4.8.5 Where directional sounders are used, they should not be located on only a single exit. They should be located at all of the identified exits in the building. This is to ensure that in an evacuation or relocation the occupants utilize all of the exits and areas of refuge, not just those that have directional sounders located near them. Some examples of exits would include the following:

(1) Code-complying exterior doors and exit discharge
(2) Code-complying exit passageway
(3) Code-complying interior stairs, including smokeproof enclosures
(4) Code-complying outside stairs
(5) Code-complying ramps
(6) Code-complying fire escapes
(7) Code-complying horizontal exits

Note that the terms *exit* and *area of refuge* have very specific definitions in building, fire, and life safety codes.

18.4.8.6 Where exit marking audible notification appliances are utilized to mark areas of refuge, they shall provide an audible signal distinct from that used for other exits that do not have areas of refuge.

18.4.9 Location of Audible Notification Appliances for Building or Structure.

18.4.9.1 If ceiling heights allow, and unless otherwise permitted by 18.4.9.2 through 18.4.9.5, wall-mounted appliances shall have their tops above the finished floors at heights of not less than 90 in. (2.29 m) and below the finished ceilings at distances of not less than 6 in. (150 mm).

18.4.9.2 Ceiling-mounted or recessed appliances shall be permitted.

The term *ceiling-mounted* is intended to address any installation of appliances in a horizontal plane. For example, in warehouse stores, combination audible and visual appliances might be suspended from the ceiling to locate the visual appliances below duct work and to provide proper visual coverage. See the commentary following 18.3.1.

18.4.9.3 If combination audible/visual notification appliances are installed, the location of the installed appliance shall be determined by the requirements of 18.5.5.

The location of a combination audible/visual notification appliance must comply with the requirements for the mounting of visual notification appliances. The height limitation specified in 18.5.5 ensures that the light pattern covers the intended area.

18.4.9.4 Appliances that are an integral part of a smoke detector, carbon monoxide detector, smoke alarm, carbon monoxide alarm, or other initiating device shall be located in accordance with the requirements for that device. NFPA 720

18.4.9.5 Mounting heights other than required by 18.4.9.1 and 18.4.9.2 shall be permitted, provided that the sound pressure level requirements of 18.4.4 for public mode or 18.4.5 for private mode, or 18.4.6 for sleeping areas, based on the application, are met.

FAQ What is the purpose of the mounting height requirements for audible appliances?

The purpose of the mounting height requirements for audible appliances is to prevent common furnishings from blocking appliances after installation. However, the required SPLs (see 18.4.4, 18.4.5, 18.4.6, and 18.4.7) are performance requirements. Thus, audible appliances are permitted at other mounting heights as long as the system ultimately provides the required SPL. The system must pass the testing requirements of Chapter 14. The appliances must also be accessible for repair and maintenance, and they should not be located where they would be subject to mechanical damage or harsh environmental conditions unless they are suitably protected.

This allowance for other mounting heights applies only to audible appliances and not to visual or combination appliances. The mounting heights for visual or combination appliances can deviate from the requirements but require a corresponding adjustment for their area of coverage. See 18.5.5.1, A.18.5.5.1, 18.5.5.2, 18.5.5.3, and 18.5.5.7.

18.4.10 Location of Audible Notification Appliances for Wide-Area Signaling. Audible notification appliances for wide-area signaling shall be installed in accordance with the requirements of the authority having jurisdiction, approved design documents, and the manufacturer's installation instruction to achieve the required performance.

Wide-area signaling typically uses outdoor high power audible appliances and large text and graphics displays. For audible signaling, the system might use tones or tones and voice. Chapter 18 does not provide performance-specific requirements for these systems. If the system supplies voice messages, Chapter 24 does require that the messages be intelligible. Because of the special system goals and the environmental effects on audibility and intelligibility, each system must be engineered carefully. Exhibit 18.18 is an example of an outdoor high power loudspeaker array.

EXHIBIT 18.18

Outdoor High Power Loudspeaker Array. (Source: Acoustic Technology, Inc., East Boston, MA)

18.4.11* Voice Intelligibility. Within the acoustically distinguishable spaces (ADS) where voice intelligibility is required, voice communications systems shall reproduce prerecorded, synthesized, or live (e.g., microphone, telephone handset, and radio) messages with voice intelligibility.

FAQ

Does *NFPA 72* require intelligibility in all spaces? What guidance does the designer have to plan and designate acoustically distinguishable spaces (ADSs) and to determine which spaces should have intelligibility or not when other governing laws, codes, or standards, as noted in 18.4.11.3, do not stipulate?

NFPA 72 does not require intelligibility in all spaces. One issue that designers and authorities must address when planning a system is the question of where intelligible voice communication is needed. Paragraphs 18.4.11.1 and 18.4.11.2 require system designers to plan and designate ADSs and identify each space as requiring or not requiring voice intelligibility.

The following Closer Look is an excerpt from "Voice Intelligibility for Emergency Voice/Alarm Communications Systems," which could assist the designer in planning and designating ADSs and determining intelligible voice communication requirements.

System Design Tip

Closer Look

In a large space used for meetings, conventions, and trade shows, an ECS needs to be reliably intelligible because it is intended to give information to the public that is not familiar with the space. However, in a high-rise apartment building, is voice intelligibility required in all spaces? The ECS is used to give information to occupants when the fire is not in their apartment. If the fire is in their particular apartment, their own local smoke alarms are used to provide an audible alert. If the fire is not in their apartment, the fire alarm system is used to give them information about whether to evacuate, relocate, or remain in place. It may not be necessary that the in-building fire EVACS or MNS be intelligible in all parts of the apartment. It certainly must be audible in all parts of the apartment, as is currently required by the codes. However, it may be sufficient to provide a loudspeaker in a common space and to provide an adequate audible tone signal in other spaces to awaken and alert the occupants.

The voice message produced by a living room loudspeaker appliance may not be intelligible behind closed bedroom and bathroom doors. However, the occupants, having been alerted and not being endangered in their own apartments, can move to a location where a repeating message can be heard intelligibly. The same signaling plan may work for office complexes: A person may have to open his or her office door to understand the message. In large public spaces, a person should not have to move any great distance to find a place where he or she can understand the message. In some spaces, such as corridors or large rooms, it might be acceptable to have intelligible voice near loudspeakers and to have lower speech intelligibility between loudspeakers. When a marginally intelligible announcement is made, people naturally turn their heads and sometimes move to positions where they can perceive the announcement more intelligibly. Thus, for these spaces, intelligibility is important and the statistical performance recommended by Annex D becomes useful. The performance requirement recommended in Annex D allows up to 10 percent of the measurement locations in an ADS to fail. See D.2.4.1, D.2.4.8, and D.2.4.10. The remaining measurements must have a certain minimum (0.45 STI or 0.65 CIS) and a certain average (0.50 STI or 0.70 CIS). If an ADS is small enough to require only one measurement location (see the requirements for measurement point spacing in Annex D), the result should be 0.50 STI (0.70 CIS) or more for the ADS to pass the recommendation for speech intelligibility.

Testing speech intelligibility can be simple or complex, low cost or high cost. The least expensive dB meters meeting the requirements of Chapter 14 of *NFPA 72* (ANSI Type 2 meters are required) cost several hundred dollars. However, these meters do not diagnose why a system is not audible, nor prescribe how to fix it. For diagnostics, more expensive meters and systems are required, although most problems can be identified through careful analysis of the system. Fortunately, most audibility problems have solutions that are intuitive to most designers and installers.

System Design Tip

Closer Look *(Continued)*

Similarly, instrument-based intelligibility measuring systems vary in price range, as does the cost of subject-based testing. More complex measurement systems require considerable expertise, training, and setup but provide diagnostics at the same time. Handheld meters, on the order of a couple of thousand dollars, require only a little more training and care than a dB meter. In fact, the only difference in using an intelligibility meter compared to a simple sound level meter is that a button is pushed to start a measurement before waiting about 15 seconds for the results. Annex D of *NFPA 72* describes a robust speech intelligibility test protocol.

Handheld meters measure the speech transmission index (STI) using the STI for public address (STIPA) method, which requires that a special test signal be sent through the communications system. The STIPA test signal contains a sample of modulated voice frequencies that represent all the phonemes of human speech (see D.2.3.5). Annex D describes how to conduct an STI test using the STIPA method. The test signal can be programmed into the system and played back. However, that method would not measure the impact of any distortion caused by the system microphone, if one is used.

A more complete test uses a "talkbox," which is a device that combines an internal amplifier with a precision loudspeaker to simulate the way sound is produced by a human head. The test signal is played by the talkbox into the system microphone and through the system to the acoustic environment. The measuring microphone of the meter represents the recipient's ear.

Even where intelligible speech is desired, measurement of speech intelligibility might not be necessary. However, where measurements are desired or recommended, how many tests should be made in a particular space? There is no guidance in *NFPA 72* for audibility measurements regarding the number and locations of test points. For intelligibility measurements, Annex D subsection D.2.4 discusses the number and location of measurements and how the data should be compiled and averaged. The FPRF report that led to the development of Annex D of *NFPA 72* has more information and sample forms.

System Design Tip

With audibility, the designer has an intuitive sense of where a system might fail and tends to concentrate the testing plan in those areas. How many designers, technicians, and authorities have such intuition regarding intelligibility? This is not an argument against testing for intelligibility. Rather, it means that testing needs to be performed and that a designer is likely to test a larger number of points initially as he or she gathers experience. For example, during the FPRF research that led to the development of Annex D, a series of tests was conducted in a mall. In one of the main mall areas, with lots of hard glass and tile surfaces and with a fountain contributing to background noise, the STIPA test signal was about 75 dBA — about 6–10 dB above ambient. Measurement results indicated poor intelligibility. In one of the individual stores, two of the participants subjectively evaluated the system and expected a lower test score because the test signal sounded considerably lower in loudness. However, the measurement indicated that the system was adequate with an STI score of 0.50 to 0.60 in different areas. The fact that the store had carpet and lots of clothing to absorb reverberation made it sound less loud and also improved the intelligibility of the system.

As with audibility, there are methods to test when a space is not occupied and then add in the expected or measured noise level later during analysis. This permits less invasive testing. For audibility, the background noise is measured while the space is occupied and in use. Then, at another time, the alarm signal is measured to determine the signal-to-noise ratio. For speech intelligibility, the instrument is used to measure and save the noise profile while the space is occupied and in use. Then, at another time, when not occupied, the speech test signal is measured and saved. Software provided by the meter manufacturer is used to combine the two data sets and get the resulting prediction of speech intelligibility. The protocol listed in Annex D addresses this type of testing. While this test sequence accounts for the effects of ambient noise, it does not account for the effect that a large number of people or furnishings might have on the reverberation in the space. For example, in some concert halls there can be a 30 percent reduction in reverberation time when the hall is full versus when there are no people present. Although people add noise, their effect on reverberation can actually improve overall intelligibility of a voice system.

A.18.4.11 See Annex D, Speech Intelligibility.

18.4.11.1* ADSs shall be determined by the system designer during the planning and design of all emergency communications systems.

A.18.4.11.1 See the definition of acoustically distinguishable space in 3.3.6.

All parts of a building or space must be divided into definable ADSs.

18.4.11.2 Each ADS shall be identified as requiring or not requiring voice intelligibility.

An ADS is not just used to designate "on" or "off" — intelligible or unintelligible. There are degrees of intelligibility, and there are different acoustic conditions. This is why all ADSs must be documented. This requirement also correlates with Chapter 7, 18.4.11.3, and 18.4.1.5.7 to create a documented trail for design, review, approval, inspection, and testing.

18.4.11.3* Unless specifically required by other governing laws, codes, or standards, or by other parts of this Code, intelligibility shall not be required in all ADSs.

A.18.4.11.3 For example, based on the system design the following locations might not require intelligibility. See also Annex D.

(1) Private bathrooms, shower rooms, saunas, and similar rooms/areas
(2) Mechanical, electrical, elevator equipment rooms, and similar rooms/areas
(3) Elevator cars
(4) Individual offices
(5) Kitchens
(6) Storage rooms
(7) Closets
(8) Rooms/areas where intelligibility cannot reasonably be predicted

System Design Tip

Not all spaces are likely to need intelligible voice communications. As more facilities incorporate voice communications for emergency and general paging and communications systems, there is a greater need for designers, installers, testing personnel, and authorities having jurisdiction to be well informed about intelligible voice communications. The FPRF conducted a program to develop a test protocol. The final report, published in 2008, also addressed certain planning and design factors. Much of that report has been incorporated into Annex D, Speech Intelligibility. The requirement for designers to plan and designate ADSs resulted from this study.

Designers must establish and document which spaces, if any, will require intelligible voice communications. Considerable discussion in Annex D and in A.3.3.6 points out that intelligible voice communication is not necessary in all spaces and that it might not be possible in certain circumstances. By requiring designers to list or otherwise document these spaces and conditions, the Code ensures that system goals are documented and agreed to by all interested parties.

System Design Tip

For each ADS, the designer must identify the spaces where occupant notification is needed. If occupant notification is required, the designer must decide if it will be by tone only or if it will include voice. If tone only is used, the audibility requirements of 18.4.4, 18.4.5, 18.4.6, or 18.4.7 apply. If the notification will be by voice with a tone alert, the same audibility requirements apply to the tone. The last decision is whether the voice component in the ADS must be intelligible. The decision tree in Exhibit 18.19 can be used for each ADS.

System Design Tip

FAQ Why would a system have voice capability but not be required by the Code to be intelligible?

A voice system must be intelligible to be effective. The key is that voice communications might not need to be intelligible in all ADSs. There will be ADSs where the system has to be intelligible if it is to serve a useful purpose, such as in an office building that has small offices around the perimeter and some combination of open plan and circulation corridors in the core. By definition, each small office, or a group of them, is an ADS. If the ECS also is to be used as a paging or music system, a designer might choose to require intelligible communications in the small offices. However, if the ECS is to be used only for emergencies, the designer might not design for intelligible communications in each of the small offices. The ADSs in the small offices would still have to receive an audible alert meeting the requirements for audibility. Occupants might then have to open their office doors and possibly move out to another ADS to receive intelligible voice communications.

FAQ Why not require all ADSs to have intelligible voice communications?

A system's mission or purpose will define where intelligible voice is needed. However, cost is another reason not to require all ADSs to have intelligible voice communications. For example, in certain highly reverberant spaces, a high degree of intelligibility is difficult to achieve. Intelligibility might be possible if acoustic treatments can be added and if more complex audio system components are used; meeting the mission goals without using intelligible voice throughout the space might still be possible.

A corridor or tunnel is a good example of a design that might not require intelligibility throughout. Good speech intelligibility can be achieved in the direct field of ceiling-mounted loudspeakers if the system is properly designed. The loudspeakers can be spaced so that someone walking the length of the corridor is always in an area with acceptable speech intelligibility. However, an acceptable design might also be to space the loudspeakers farther apart. In that case, there might be small distances where the system is audible but not highly intelligible. When people hear a voice message and have difficulty understanding it, their natural reaction is to turn their heads and/or take a few steps to improve the receipt of the message to their ears.

In ADSs that have a lot of hard surfaces, resulting in high reverberation, loudspeakers would have to be close together and powered at very low wattages to reduce reverberation and increase intelligibility.

EXHIBIT 18.19

ADS Planning and Design Decision Tree. (Source: R. P. Schifiliti Associates, Inc., Reading, MA)

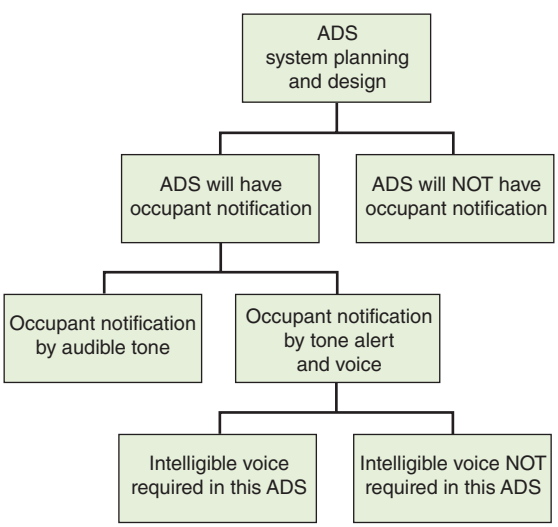

It might be perfectly acceptable and effective to use the alternative design in which the system would not be intelligible throughout the area. In a manufacturing plant, a combination of alert tones and visual appliances might get people's attention. There might be areas where the floor is painted to designate a place where the message can be heard and understood. Some loudspeakers can be aimed to create an area with good intelligibility and to avoid projecting sound to other areas. Exhibit 18.20 shows an example of an audible notification appliance that can be aimed.

In the tunnel example, loudspeakers might be spaced more widely to reduce overall sound energy and attendant reverberation in the hard-finished space, which could improve intelligibility within the direct field of the loudspeaker. The direct field is generally taken as the cone where the sound level is within 6 dB of the on-axis dB; it will vary with frequency and is usually taken at 2000 Hz for voice communications. The direct field is also a function of angle from the loudspeaker axis and distance from the loudspeaker.

EXHIBIT 18.20

Outdoor Loudspeaker Array Adjustable from 90° to 360°. (Source: Ultra Electronics-USSI HyperSpike®, Columbia City, IN)

18.4.11.4* Where required by the authority having jurisdiction governing laws, codes, or standards; or other parts of this Code, ADS assignments shall be submitted for review and approval.

A.18.4.11.4 ADS assignments should be a part of the original design process. See the discussion in A.3.3.6. The design drawings should be used to plan and show the limits of each ADS where there is more than one.

All areas that are intended to have audible occupant notification, whether by tone only or by voice should be designated as one or more ADSs. Drawings or a table listing all ADSs should be used to indicate which ADSs will require intelligible voice communications and those that will not. The same drawings or table could be used to list audibility requirements where tones are used and to list any forms of visual or other notification or communications methods being employed in the ADS.

Note that 18.4.11.1 requires the designer to designate ADSs and determine where voice is required by a local code or where it will be used to meet an owner's goals. Paragraph 18.4.11.4 then states that the proposed design might have to be submitted for review and approval — which is the usual case. If a table is used, as suggested in A.18.4.11.4, listing each ADS is not always necessary. In an office building that has small offices around the perimeter and some combination of open plan and circulation corridors in the core, the small, individual offices could be listed as "Offices 201 through 212" or "Perimeter Offices." On drawings, the offices could be outlined and a note could indicate that each is an ADS with common characteristics.

Exhibit 18.21 is an example of one designer's approach to ADS designation using colored shading on a drawing.

System Design Tip

Δ **18.4.11.5** Quantitative measurements shall not be required.

• **18.4.11.6** Quantitative measurements shall be permitted. *(See D.2.4)*.

N

FAQ Is there information relative to intelligibility determination for in-building fire EVACS?

Paragraphs 18.4.11.5 and 18.4.11.6 pertain to quantitative measurements for intelligible voice communication. Paragraph 18.4.11.5 says that quantitative measurements are not required, whereas 18.4.11.6 indicates that such measurements are permitted and refers the user to Annex D.2.4. Annex D.2.4 has extensive discussion on the variability of measurements, precision, and rounding of results.

The following Closer Look is an excerpt from "Voice Intelligibility for Emergency Voice/Alarm Communications Systems," which further explains the measurements for speech intelligibility. The complete article can be found at the end of Annex D.

EXHIBIT 18.21

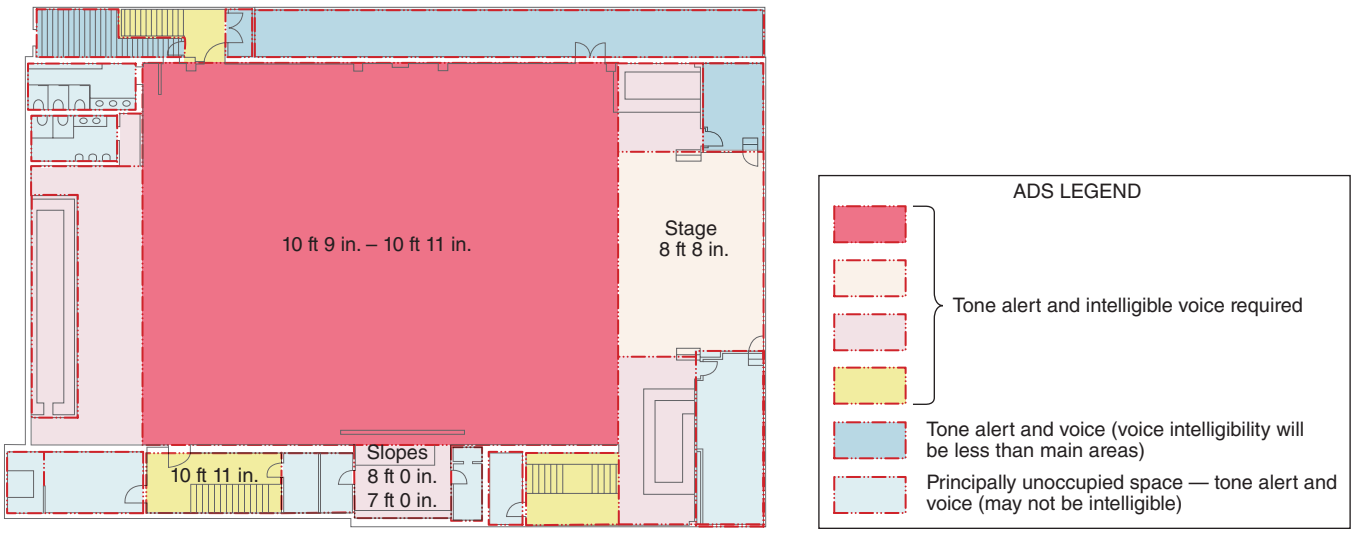

Sample ADS Layout for Nightclub. (Source: R. P. Schifiliti Associates, Inc., Reading, MA)

Closer Look

The industry uses intelligibility measurement and prediction methods to understand and improve the parts of the communications chain that it can control and to increase the likelihood of successful communication between the talker and the listener.

Speech intelligibility is a measure of the effectiveness of speech. The measurement can be expressed as a percentage of a message that is understood correctly. Speech intelligibility does not imply speech *quality*. A synthesized voice message may be completely understood by the listener, but may be judged to be harsh, unnatural, and of low quality. A message that lacks quality or fidelity may still be intelligible.

Satisfactory speech intelligibility requires adequate *audibility* and adequate *clarity* of the voice message. Audibility is relative to the background noise — the signal-to-noise ratio. Clarity is the property of sound that allows its information-bearing components to be distinguished by a listener.

Speech intelligibility evaluations can be either subjective or objective. Reading an article from a newspaper and asking a listener to write down what they understand the message to be is a subjective evaluation. One reader/talker might better enunciate certain words or slur other word parts. The news article used for a test one day may differ from one used another day and may be composed of short simple words, or the word and phoneme order may be less susceptible to distortion caused by reverberation and echo. At the other end of the communication chain, the listener used in the evaluation might have hearing deficiencies or learning disabilities, including auditory dyslexia. Or the listener that might be expected to occupy the space on a regular basis might have hearing that is better than average. The content and context of the article may cause the listener to guess at words and content that are actually not intelligibly received. For subject-based testing to be *objective*, it must use a scientific and statistically valid methodology. Otherwise, it is not a valid prediction of how the general public might perceive, receive, and interpret the voice messaging delivered by the system in that space.

Persons interested in fire alarm systems started a discussion with the idea that a simple test of intelligibility could be performed using the "newspaper test." It was suggested that professionally developed word lists designed to test all components of human speech be used. It was then suggested that a protocol be established to document the conditions and variables. The protocol suggested multiple listeners and statistical analysis of the results. Interestingly, the protocol began to resemble

Closer Look *(Continued)*

established international standards that had been developed by researchers in the audio field more than 50 years ago and that have been used by acoustic professionals and audiologists for decades to objectively evaluate personal hearing ability, sound systems, and acoustic environments.

One should not confuse subjective with subject-based testing. It is possible for tests using talkers and listeners (subject-based tests) to be objective. The key is to use established protocols that reduce the impact of personal conditions and produce results that are repeatable. Similarly, an instrument-based test that is repeatable for a given set of conditions may not be objective if it does not have an established basis in reality. Both subject-based testing and instrument-based testing require peer-reviewed research, testing, and established standards to become accepted objective measurement methods.

As with audibility, any measure of speech intelligibility is a prediction of how well the system will perform at other times. All intelligibility prediction methods are predicated on subject-based tests. A talker says a word — usually in a sentence — and a listener writes down what the listener thinks he or she heard. For example, "It is now time to write the word *boat* on your test sheet." The talker is careful not to emphasize the word or to change the pace of talking. The score for that test is either right or wrong — 100 percent or 0 percent. That single test does nothing to predict the score for future tests of the communications system and listening environment. If many words are tested, eventually a statistic is obtained that predicts the percentage of the time that particular listener will understand words delivered by the communications system.

However, a test with a single listener does not tell whether the general population will have a similar listening comprehension. It is necessary to use a group of listeners and to score the whole group. The group should represent the general population so that a good cross section of ears and brains is used. This measurement method results in a statistic that is a prediction of how the public will understand messages delivered by the system. These objective, subject-based test methods have been tested and standardized. Objective, instrument-based tests have been developed and correlated with the subject-based test methods.

The performance of a voice system depends on the system hardware and the acoustic environment. They cannot be separated when evaluating speech intelligibility. A fire alarm horn can be specified for a space and required to produce 80 dBA at 10 ft (3 m). However, the power supply and wiring will affect the output of the horn. The mounting location will affect the distribution of the sound. The acoustic environment will affect the energy dissipation in the space and the loudness. Finally, the background noise will affect whether the horn is heard reliably. The fire alarm industry has recognized that there are situations where the installed field performance of an audible signaling system must be measured to evaluate its performance with respect to the system's design objectives. Similarly, speech intelligibility is affected by all of these systems, environmental factors, and more. Thus, the performance metric for speech intelligibility must also assess all of the requisite parameters.

International standards organizations — namely, the International Electrotechnical Commission (IEC) and International Standards Organization (ISO) — have reviewed and evaluated objective methods for evaluating speech intelligibility. Some of the methods recognized and accepted in international standards and by the acoustics and professional sound industries are subject-based test methods, and others are instrument-based test methods. For each of the recognized methods, there exists an internationally accepted standard for the test method/protocol. Four of the recognized methods use test instruments. Three subject-based methods are also recognized. One method has both a subject-based solution and an instrument-based solution.

System Design Tip

Each of the established methods for measuring speech intelligibility has its own scale. By comparing evaluations between different test methods, a common intelligibility scale (CIS) was developed. The CIS permits comparison of test results using the different methods. It also permits a designer, code, or authority having jurisdiction to specify a requirement that can be evaluated using any one of the test methods listed in the table. Consult the references for more detail on each of the test methods.

The Speech Transmission Index (STI) is the most widely used intelligibility index and has been implemented in portable equipment using a modified method called STIPA (STI Public Address).

18.5* Visual Characteristics — Public Mode.

The requirements of *NFPA 72* have been accepted as "equivalent facilitation" (and in some cases are superior) to the 2005 edition of *Americans with Disabilities Act Accessibility Guidelines (ADAAG)*. The *Americans with Disabilities Act and Architectural Barriers Act Accessibility Guidelines (ADA-ABA-AG)* references *NFPA 72*. The *ADA-ABA-AG* and *ADAAG* continue to trigger upgrades of existing fire alarm systems. However, most fire alarm systems are installed new or as a part of some other building project. In those cases, almost all local jurisdictions have adopted a form of accessibility code or have incorporated the concepts directly into their building and fire codes, which then reference and require use of *NFPA 72*.

A.18.5 The mounting height of the appliances affects the distribution pattern and level of illumination produced by an appliance on adjacent surfaces. It is this pattern, or effect, that provides occupant notification by visual appliances. If mounted too high, the pattern is larger but at a lower level of illumination (measured in lumens per square foot or foot-candles). If mounted too low, the illumination is greater (brighter) but the pattern is smaller and might not overlap correctly with that of adjacent appliances.

A qualified designer could choose to present calculations to an authority having jurisdiction showing that it is possible to use a mounting height greater than 96 in. (2.44 m) or less than 80 in. (2.03 m), provided that an equivalent level of illumination is achieved on the adjacent surfaces. This can be accomplished by using listed higher intensity appliances or closer spacing, or both.

Engineering calculations should be prepared by qualified persons and should be submitted to the authority having jurisdiction, showing how the proposed variation achieves the same or greater level of illumination provided by the prescriptive requirements of Section 18.5.

The calculations require knowledge of calculation methods for high-intensity visual notification appliances. In addition, the calculations require knowledge of the test standards used to evaluate and list the appliance.

18.5.1* Visual Signaling.

A.18.5.1 There are two methods of visual signaling. These are methods in which notification of an emergency condition is conveyed by direct viewing of the illuminating appliance or by means of illumination of the surrounding area.

Visual notification appliances used in the public mode must be located and must be of a type, size, intensity, and number so that the operating effect of the appliance is seen by the intended viewers regardless of the viewer's orientation.

In the same manner that signals produced by audible notification appliances must be heard clearly, the signals produced by visual notification appliances must be seen clearly without regard to the viewer's position within the protected area, as noted in A.18.5.1. This does not mean that an appliance must be seen from any location in a space but rather that the operating effect must be seen. For example, if a single visual notification appliance in an L-shaped area is properly located and sized, the visual appliance itself might not be seen (i.e., not be visible) from all parts of the room, but the effect of the flash will be seen on the floor, walls, and other surfaces in the space. Also note that there is no requirement to place an appliance so that it can be directly viewed by the majority of occupants or by any occupant in particular.

18.5.1.1 Public mode visual signaling shall meet the requirements of Section 18.5 using visual notification appliances.

Δ **18.5.1.2*** The coverage area for visual notification shall be as required by other governing laws, codes, or standards.

A.18.5.1.2 Visual notification appliances for fire or emergency signaling might not be required in all rooms or spaces. For example, a system that is used for general occupant notification should not require visual signaling in closets and other spaces that are not considered as occupiable areas. However, a space of the same size used as a file room could be considered occupiable and should have coverage by notification appliances. Also, signaling intended only for staff or emergency forces might only have to be effective in very specific locations.

N **18.5.1.3** Where other governing laws, codes, or standards require visual notification for all or part of an area or space, coverage shall only be required in occupiable areas as defined in 3.3.187.

Other governing laws, codes, or standards require visual signaling. However, many of these do not detail the location where signaling is required. Performance-type language is used to indicate that where a code uses broad language, such as simply requiring visual signaling for a specific occupancy or use group, coverage is needed only for the occupiable parts of those occupancies. See the defined terms *occupiable* and *occupiable area* in 3.3.186 and 3.3.187.

18.5.2 Area of Coverage.

18.5.2.1 The designer of the visual notification system shall document the rooms and spaces that will have visual notification and those where visual notification will not be provided.

This requirement is similar to that of ADS designations for voice communications. In most simple cases, just showing appliances on a plan will suffice. However, in some cases, the areas or specific rooms should be designated so that it is clear that visual signaling is or is not intended for that space.

18.5.2.2* Unless otherwise specified or required by other sections of this Code, the required coverage area for visual notification shall be as required by other governing laws, codes, or standards.

A.18.5.2.2 Occupant notification by visual signaling is not required by *NFPA 72* except in high noise areas *(see 18.4.1.1)*. Just as with audible occupant notification, the requirement to have such signaling originates from other governing laws, codes, or standards. Those other governing laws, codes, or standards specify the areas or spaces that require either audible, visual, or both types of occupant notification. *NFPA 72* then provides the standards for those systems.

18.5.2.3 Where required by the authority having jurisdiction, documentation of the effective intensity (cd) of the visual notification appliances for the area of coverage shall be submitted for review and approval.

Candela (cd) is a unit of measure for luminous intensity. In simple terms, it can be thought of as the amount of light output by a steady source. The term *effective intensity* or *candela effective (cd eff) intensity* is used for the light output of a flashing light, as explained in the commentary following 18.5.3.2. Although Chapter 18 is inconsistent in the use of these terms and abbreviations, all *NFPA 72* requirements and commentary are intended to reference effective intensities when addressing flashing visual appliances. Also see the commentary following A.18.5.3.5.

18.5.3 Light, Color, and Pulse Characteristics.

18.5.3.1 The flash rate shall not exceed two flashes per second (2 Hz) nor be less than one flash every second (1 Hz) throughout the listed voltage range of the appliance.

18.5.3.2 The maximum light pulse duration shall be 20 milliseconds, except as permitted in 18.5.3.3.

System Design Tip

Paragraph 18.5.3.2 was modified in the 2016 edition of the Code, reducing the pulse duration from 200 milliseconds (0.2 seconds) to 20 milliseconds (0.02 seconds). This change affects the listing process and does not require special attention from designers, installers, or inspectors other than verifying that the appliance is listed to meet the new requirement.

The change was made because the existing visual appliance coverage tables and the existing product listing process would allow a low peak intensity for an appliance with a long pulse duration. The existing listing validation process uses a metric that, in part, gives the same rating to two lights when the area under their pulse curves is about equal. (The actual calculation is a bit more complex, but this analogy is adequate in this context.) The two visual notification appliances plotted in Exhibit 18.22 might have the same cd eff rating and be allowed to be used interchangeably.

The existing listing performance specification had worked well because all xenon strobe lights have roughly the same pulse shape (i.e., high peak and short duration). However, other visual appliances could be designed to produce lower peak intensities over a longer pulse duration. The latest research indicates that there must be some minimum peak intensity to produce sufficient reflection off of surfaces for the signal to be detected by those who are not looking directly at the appliance. By imposing a maximum pulse duration, the Code requires visual appliances to produce a higher peak light intensity to provide effective indirect signaling performance.

Ongoing research will lead to future changes that will allow a fair comparison of different types of light-producing elements.

N **18.5.3.3*** Light pulse durations greater than 20 milliseconds, but not greater than 100 milliseconds, shall be permitted where the alerting capability of the visual notification appliance is demonstrated to be equal to or greater than visual notification appliances with a 20-millisecond pulse duration.

The text of this paragraph has been changed for the 2019 edition to reflect research using LEDs that can have longer pulse durations and still provide alerting performance that is equivalent to common xenon strobes. The new requirement is essentially aimed at manufacturers and listing agencies that must create and verify equal alerting capability for longer pulse duration appliances.

•

N **A.18.5.3.3** Research indicates that equivalent indirect alerting is obtained between 0.1 milliseconds to 20 milliseconds. Testing above 20 milliseconds indicates that the effective candela must be increased to obtain equivalent alerting capability to that of shorter light pulse durations of 20 milliseconds or less. The effective candela rating should be increased by the value in Table A.18.5.3.3 to achieve equivalent alerting capability.

EXHIBIT 18.22

Comparing Different Appliance Technologies. (Source: R. P. Schifiliti Associates, Inc., Reading, MA)

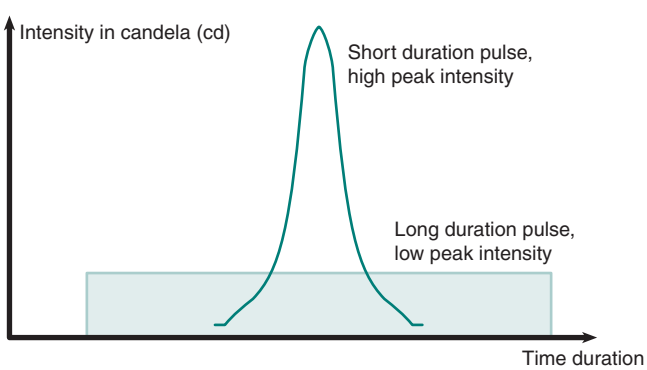

As research into effective visual signaling continues, the adjustment table in this Annex section should be used with caution. It is anticipated that the state of the art will change for the next edition of the Code.

TABLE A.18.5.3.3 *Visual Notification Appliance Rating Multipliers for Equivalent Alerting Capability*

Rated Light Pulse Duration (milliseconds)	*Rating Multiplier*
20	1.00
25	1.22
30	1.43
35	1.64
40	1.83
45	2.02
50	2.20
55	2.37
60	2.54
65	2.70
70	2.85
75	3.00
80	3.14
85	3.28
90	3.41
95	3.54
100	3.67

FAQ How would a designer use Table A.18.5.3.3?

As an example, assume a room or area requires a 30 cd eff visual appliance per Table 18.5.5.5.1(a) or Table 18.5.5.5.1(b). Also, assume that the designer chooses to use a visual appliance that has a 50 ms pulse duration. Then, the visual appliance to be used should be listed for 30 cd eff x 2.20 (multiplier from table) = 66 cd eff.

System Design Tip

18.5.3.4 The pulse duration shall be defined as the time interval between initial and final points of 10 percent of maximum signal.

The light intensity of a pulsed xenon strobe can be graphed as a curve ascending to a peak and then decaying. The duration of the pulse is measured beginning at the point where the upward side of the curve exceeds 10 percent of the maximum intensity to the point where the downward side of the curve drops below 10 percent of the maximum intensity. See Exhibit 18.23 for an example of a graph showing these phenomena for two different pulse curves. While an actual appliance output curve might be shaped differently, the exhibit illustrates the general concept. Newer LED appliances have more of a rectangular profile, as shown in Exhibit 18.22.

EXHIBIT 18.23

Peak Versus Effective Intensity. (Source: R. P. Schifiliti Associates, Inc., Reading, MA)

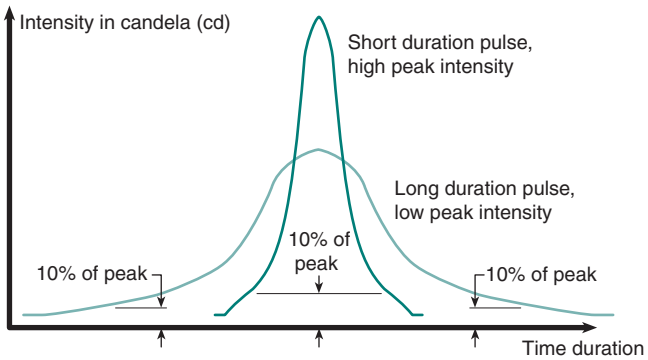

18.5.3.5* Visual notification appliances used for fire alarm signaling only or to signal the intent for complete evacuation shall be clear or nominal white and shall not exceed 1000 cd (effective intensity).

A.18.5.3.5 Effective intensity is the conventional method of equating the brightness of a flashing light to that of a steady-burning light as seen by a human observer. The units of effective intensity are expressed in candelas (or candlepower, which is equivalent to candelas). For example, a flashing light that has an effective intensity of 15 cd has the same apparent brightness to an observer as a 15 cd steady-burning light source.

Measurement of effective intensity is usually done in a laboratory using specialized photometric equipment. Accurate field measurement of effective intensity is not practical. Other units of measure for the intensity of flashing lights, such as peak candela or flash energy, do not correlate directly to effective intensity and are not used in this Code.

Visual notification appliances might be used to signal fire or other emergencies and might be intended to initiate evacuation, relocation, or some other behavior. Lights intended to initiate evacuation due to fire are required by the Code to be clear or white. Colored lights, such as amber/yellow lights, might be used in a combination system for any emergency (fire, bomb, chemical, weather, etc.) when the intent is for the signal recipient to seek additional information from other sources (voice, text displays, and so on).

Example Scenario 1: A building has a fire alarm system used for general evacuation. A separate mass notification system is used to provide voice instructions and information in the event of non-fire emergencies. The fire alarm system would have white/clear visual notification appliances intended to alert occupants of the need to evacuate. The mass notification system would have amber/yellow visual notification appliances that are intended to signal the need to get additional information from either audible voice announcements, text or graphical displays, or other information sources controlled or operated from the mass notification system. In the event that both systems are activated at the same time, the visual notification appliances should be synchronized per 18.5.5.5.2.

Example Scenario 2: A building has a mass notification system that provides information and instructions for a variety of emergency situations, including fire. Fire alarm initiation might be by a stand-alone fire detection system or might be an integral part of the mass notification system. In the event of an emergency, textual audible appliances are used to provide information. Visual signaling could be accomplished using one set of clear or colored visual notification appliances to indicate the need to get additional information. Visual textual information can be provided by text or graphic display or other visual information appliances. The content of the audible and visual messages will vary depending on the emergency.

FAQ What is source intensity?

Requirements for fire alarm visual notification appliances are based on a flashing light rather than a steadily burning light. Because visual appliances flash very briefly, the perceived brightness can vary depending on the actual peak source strength and the flash duration. Whereas one appliance might reach a peak intensity of 1000 cd in 0.1 second and another 750 cd in 0.2 second, the human eye might perceive both as equally bright. A mathematical relationship is used to relate the perceived brightness of a flashing light to that of a constantly burning light. The result is called the effective intensity. Although *cd* is used for a steadily burning light and *candela-second* (cd-s) is used for a flashing light, the term *effective intensity,* indicated in cd eff, is used in this Code to describe the brightness of a visual appliance. See A.18.5.3.5.

Source intensity is a measure of the light output of the appliance. As you move away from a light source, its illumination decreases. As distance (d) from the source increases, the source intensity (I) must also increase to provide the required illumination (E). Illumination is measured in units of lumens per square foot or lumens per square meter (also called lux).

Illumination (E) = 1 lumen/ft^2 or 1 footcandle (1 lumen/m^2 or 1 lux or 0.0926 footcandle). One (1) cd is 12.57 lumens.

See Exhibit 18.24, which illustrates this phenomenon. See the FAQ following 18.5.5.3 for further explanation of this effect.

18.5.3.6 Visual notification appliances used to signal occupants to seek information or instructions shall be clear, nominal white, or other color as required by the emergency plan and the authority having jurisdiction for the area or building.

As required by 18.3.3.2, notification appliances used for signaling other than fire cannot be labeled with the word "FIRE" or with any fire symbol in any form. An ECS can use the same appliances for signaling both fire and other emergencies. Some ECSs use multiple visual appliances. In those cases, one visual appliance is labeled FIRE and is used to signal the need for immediate evacuation or relocation. Another visual appliance is used during more complex situations to signal the need for occupants to get more information from other sources. (See the commentary following A.18.3.3.2 and 18.3.3.3.) The requirements in Chapter 24 offer some flexibility as to how visual appliances are to be used with ECSs. For MNSs, the use of flashing visual appliances may not provide enough information for the hearing impaired to take appropriate action. Textual graphic or video displays can be used to serve that purpose.

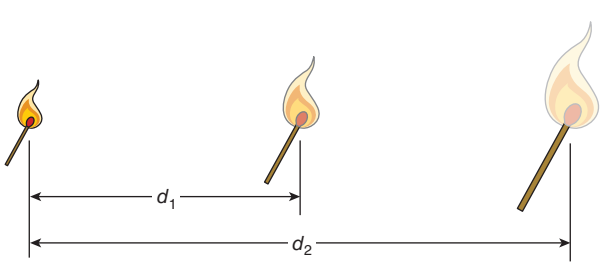

$$E = \frac{I}{d^2}$$

1) As the source intensity remains constant, the illumination decreases with distance.
2) The performance-based alternative of 18.5.5.7 requires 0.0375 lumens/ft^2 of illumination at any point within the area.

EXHIBIT 18.24

Effect of Distance on Illumination.

Clear or nominal white are required for fire alarm signaling only or when the intent is for complete evacuation. Where visual notification appliances are intended to elicit a different response, other colors are permitted, although clear or nominal white is still permitted provided the intent is clarified by the emergency plan. Signage and training of regular occupants might be necessary. The use of different types or colors of visual notification appliances on a system to influence occupant behavior should be carefully considered. However, it might be advisable only where the occupants are not transient and are well trained and drilled in the required response.

18.5.3.7* The visual synchronization requirements of this chapter shall not apply where the visual notification appliances located inside the building are viewed from outside of the building.

A.18.5.3.7 It is not the intent to establish viewing and synchronization requirements for viewing locations outdoors. As an example, there is no need for Floor No. 1 to be synchronized with Floor No. 2 if there is no visual coupling as in an atrium.

Studies have shown that the effect of visual notification appliances on photosensitive epilepsy lessens with distance and viewing angle.

As long as the composite flash rate is no greater than that produced by two listed visual notification appliances as allowed by 18.5.5.5.2, compliance is achieved.

Example: A ballroom has multiple synchronized visual notification appliances operating during an emergency, the doors exiting the ballroom are opened, and the visual notification appliances outside in the lobby and corridor are also operating. The visual notification appliances in the corridor and lobby are synchronized with each other, but the visual notification appliances outside the ballroom are not synchronized with the visual notification appliances inside the ballroom. This would be an acceptable application because the composite flash rate does not exceed that allowed by 18.5.5.5.2.

Where a multiple-story building is viewed from the parking lot of the site, flashing visual appliances viewed on each of the building levels might be synchronized on each floor level, but the floors are not necessarily synchronized with each other. This is permitted because the visual appliances are viewed from outside of the building and the intensity of the light from the visual appliances reaching an individual's eyes is greatly diminished.

NFPA 720 *N* **18.5.3.8** Visual notification appliances used for carbon monoxide signaling shall be as required by the emergency plan and the authority having jurisdiction for the area or building and shall not exceed 1000 cd (effective intensity).

Signaling a CO alert is the same as for any non-fire event. See 18.3.3.2 and 18.5.3.6.

18.5.4* Appliance Photometrics. The light output shall comply with the polar dispersion requirements for public mode signaling as described in ANSI/UL 1971, *Standard for Signaling Devices for the Hearing Impaired*, ANSI/UL 1638, *Standard for Visible Signaling Devices for Fire Alarm and Signaling Systems, Including Accessories,* or equivalent.

FAQ Why are the polar dispersion characteristics of visual appliances important?

The polar dispersion characteristics of visual appliances are very important for compliance with Chapter 18 because the effectiveness of visual signaling is based on tests in which the viewers responded to the illumination of their surroundings. It is important that the appliance produce a pattern of light on

adjacent surfaces such as walls, floors, and desks. Appliances listed to standards other than ANSI/UL 1971, *Standard for Signaling Devices for the Hearing Impaired*, and not having specified polar dispersion requirements might produce most of their light on axis and very little down or off to the side. Thus, the appliance might not produce a noticeable pattern sufficient to alert occupants. See Exhibit 18.29 after the commentary that follows 18.5.5.7.2 for a visual representation of polar dispersion for a wall-mounted visual notification appliance.

A.18.5.4 The prescriptive requirements of Section 18.5 assume the use of appliances having very specific characteristics of light color, intensity, distribution, and so on. The appliance and application requirements are based on extensive research. However, the research was limited to typical residential and commercial applications such as school classrooms, offices, hallways, and hotel rooms. While these specific appliances and applications will likely work in other spaces, their use might not be the most effective solution and might not be as reliable as other visual notification methods.

For example, in large warehouse spaces and large distribution spaces such as super stores, it is possible to provide visual signaling using the appliances and applications of this chapter. However, mounting visual notification appliances at a height of 80 in. to 96 in. (2.03 m to 2.44 m) along aisles with rack storage subjects the visual notification appliances to frequent mechanical damage by forklift trucks and stock. Also, the number of appliances required would be very high. It might be possible to use other appliances and applications not specifically addressed by this chapter at this time. Alternative applications must be carefully engineered for reliability and function and would require permission of the authority having jurisdiction.

Tests of a system in large warehouse/super stores designed using the prescriptive approach of 18.5.5.5 showed that high ambient light levels resulted in both indirect and direct signaling effects. The signal-to-noise ratio produced by the operating visual notification appliances was low in many locations. However, with visual notification appliances located over the aisles or unobstructed by stock, indirect and some direct notification was sometimes achieved. Direct notification occurs even when occupants do not look up toward the ceiling-mounted visual notification appliances due to the extended cone of vision shown in Figure A.18.5.4(a). The visual notification appliance intensity and spacing resulting from the prescriptive design was generally sufficient for occupant notification by a combination of direct and indirect signaling. Testing showed that the best performance was achieved where visual notification appliances were directly over aisles or where visual notification appliances in adjacent aisles were not obstructed by stock. The performance-based design method will almost always result in aisles not having a line of visual notification appliances in them, because the spacing of visual notification appliances can be greater than the spacing of aisles. Also, it is recognized that aisles might be relocated after installation of the system. Good design practice is to place visual notification appliances over aisles, especially those that are likely to remain unchanged such as main aisles, and over checkout areas. Where reorganization of aisles results in visual notification appliances not in or over an aisle, or where that is the base design, it is important to have a clear view from that aisle to a nearby visual notification appliance. See Figure A.18.5.4(b). Some spaces might have marginal visual notification appliance effect (direct or indirect). However, occupants in these large stores and storage occupancies move frequently and place themselves in a position where they receive notification via the visual notification appliances. In addition, complete synchronization of the visual notification appliances in the space produced a desirable effect.

Visual notification using the methods contained in 18.5.5.5 is achieved by indirect signaling. This means the viewer need not actually see the appliance, just the effect of the appliance. This can be achieved by producing minimum illumination on surfaces near the appliance, such as the floor, walls, and desks. There must be a sufficient change in illumination to be noticeable. The tables and charts in Section 18.5 specify a certain candela-effective light intensity for certain size spaces. The data were based on extensive research and

testing. Appliances do not typically produce the same light intensity when measured off-axis. To ensure that the appliance produces the desired illumination (effect), it must have some distribution of light intensity to the areas surrounding the appliance. ANSI/UL 1971, *Standard for Signaling Devices for the Hearing Impaired*, specifies the distribution of light shown to provide effective notification by indirect visual signaling.

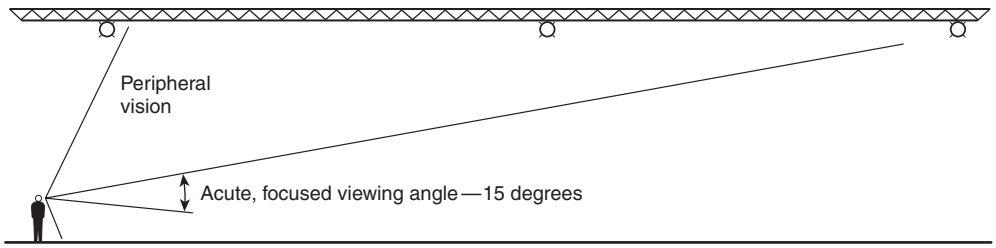

FIGURE A.18.5.4(a) *Extended Cone of Vision. (Courtesy of R. P. Schifiliti Associates, Inc.)*

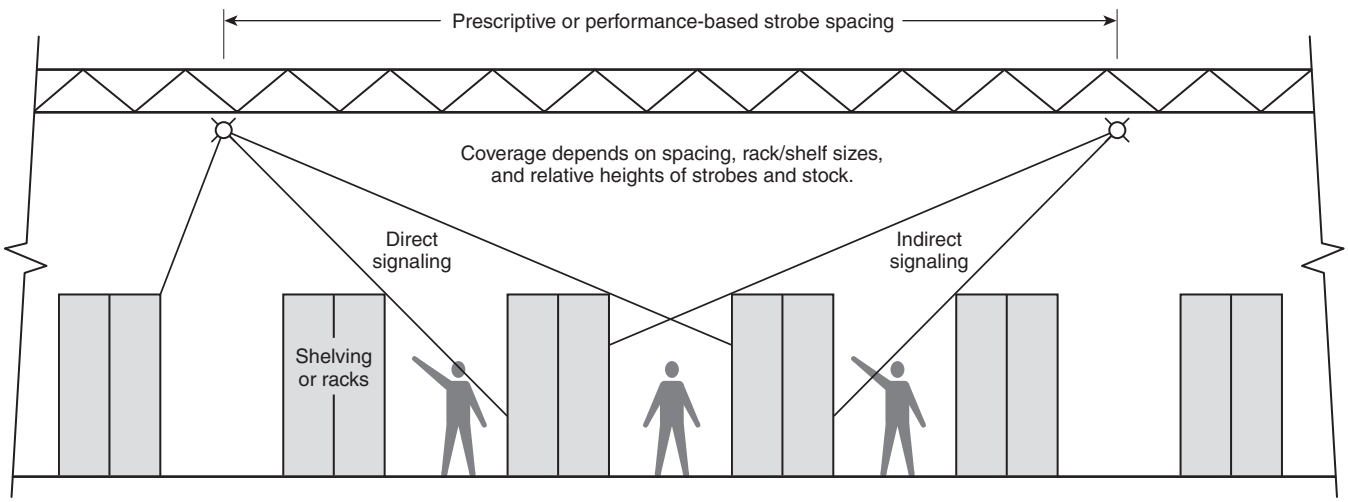

FIGURE A.18.5.4(b) *Visual Notification Appliances in Stores. (Courtesy of R. P. Schifiliti Associates, Inc.)*

Subsection A.18.5.4 provides discussion and examples of visual signaling methods in large, warehouse-type spaces. These guidelines are based on testing done under a grant from the FPRF. The report, *Direct Visual Signaling as a Means for Occupant Notification in Large Spaces*, is available at www.nfpa.org/foundation.

18.5.5 Appliance Location.

18.5.5.1* Wall-mounted appliances shall be mounted such that the entire lens is not less than 80 in. (2.03 m) and not greater than 96 in. (2.44 m) above the finished floor or at the mounting height specified using the performance-based alternative of 18.5.5.7.

A.18.5.5.1 The requirements for the location of appliances within a building or structure are intended to apply to visual notification appliances applied in accordance with 18.5.5.5,

18.5.5.6, and 18.5.5.8. The mounting and location of appliances installed using the performance-based alternative of 18.5.5.7 can be located differently, provided they meet the intended performance requirements. Other appliances, such as graphic displays, video screens, and so on, should be located so that they meet their intended performance.

Where low ceiling heights or other conditions do not permit mounting at a minimum of 80 in. (2.03 m), visual notification appliances can be mounted at a lower height. However, lowering the mounting height reduces the area of coverage for that visual notification appliance. The performance-based methods of 18.5.5.7 can be used to determine the area of coverage. Visual notification appliance mounting height should not be lowered below the plane of normal human viewing [approximately 5 ft (1.5 m)] except where ceiling heights limit the mounting position.

The mounting height requirement of 80 in. to 96 in. (2.03 m to 2.44 m) does not address the possibility of conditions where ceiling heights are less than 80 in. (2.03 m). The range that is permitted [80 in. to 96 in. (2.03 m to 2.44 m)] ensures that visual notification appliances are not mounted too high, which would result in lower levels of illumination on surrounding walls and on the floor. The lower limit of the range ensures that a minimum percentage of the surrounding surfaces is illuminated and that the top of the illuminated pattern is at or above the plane of normal human viewing [approximately 5 ft (1.5 m)]. Wall mounting of visual notification appliances, which are listed only for wall mounting, can result in little or no illumination above the plane of the visual notification appliance. In the case of lower ceiling heights and mounting close to the ceiling, the level of illumination on the floor and surrounding walls is not reduced but the walls have a near 100 percent illuminated or "painted" area because the visual notification appliance is close to the ceiling. That is, there is little or no wall surface above the plane of the visual notification appliance that is not illuminated when the visual notification appliance is mounted close to the ceiling. Thus, when a visual notification appliance is mounted lower than the minimum [80 in. (2.03 m)] but still close to the ceiling, the only loss of signal is the smaller pattern produced on the horizontal plane (floor).

In the case where the only change is a lower mounting height due to a lower ceiling height, the room size covered by a visual notification appliance of a given value should be reduced by twice the difference between the minimum mounting height of 80 in. (2.03 m) and the actual, lower mounting height. For example, if a 15 cd effective visual notification appliance that normally covers a 20 ft (6.1 m) square space is being used and the height of the space is 63 in. (1.6 m) and the visual notification appliance is mounted at 59 in. (1.5 m), the visual notification appliance can only cover a 16.5 ft (5.0 m) square space: 20 ft –2 (80 in. – 59 in.) (1 ft/12 in.) = 16.5 ft (5.0 m).

The room size reduction assumes that the horizontal pattern on each side of the visual notification appliance is reduced by the same amount that the visual notification appliance height is reduced.

Exhibit 18.25 graphically shows the permitted installation height for wall-mounted visual appliances.

Δ **18.5.5.2** Where low ceiling heights do not permit wall mounting at a minimum of 80 in. (2.03 m), wall mounted visual notification appliances shall be mounted within 6 in. (150 mm) of the ceiling.

N **18.5.5.3** Where low ceiling heights do not permit wall mounting at a minimum of 80 in. (2.03 m), the room size covered by a visual notification appliance of a given value shall be reduced by twice the difference between the minimum mounting height of 80 in. (2.03 m) and the actual lower mounting height.

EXHIBIT 18.25

Installation of Wall-Mounted Visual Appliances. (Source: R. P. Schifiliti Associates, Inc., Reading, MA)

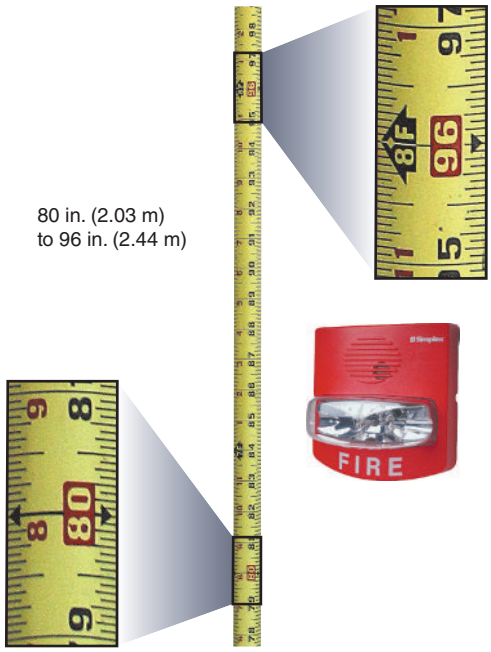

FAQ What is the purpose of the minimum and maximum mounting heights for wall-mounted visual notification appliances?

The minimum mounting height is to position appliances so they are not blocked by common furnishings or equipment and, more important, to ensure a light pattern large enough to cover the intended space. The maximum mounting height is important because the illumination from a visual appliance reduces drastically with distance and angle from a horizontal plane through the appliance. Proof of this reduction can be determined by the mathematical relationship in Exhibit 18.24.

For these reasons, the entire lens of the wall-mounted appliance must be not less than 80 in. (2.03 m) and not more than 96 in. (2.44 m) above the floor. See 18.5.5.1. Ceiling mounting is permitted; however, the appliance must be specifically listed for ceiling mounting. See also A.18.5.

Where low ceilings do not permit wall-mounted appliances to be installed within the specified range, 18.5.5.3 has a method to alter the permitted coverage based on the actual mounting height. The allowance for lower ceiling heights is discussed in the fourth paragraph of A.18.5.5.1.

A flashlight pointed downward to shine light toward the floor illustrates the effect. The light has certain brightness (illumination) over a certain size area. If the flashlight is moved closer to the floor, the area illuminated becomes smaller while the level of illumination (brightness) increases. The same effect occurs when a visual appliance is installed below the minimum mounting height. The higher level of illumination is acceptable, but the smaller area of coverage must be accounted for as required by 18.5.5.3.

When a visual appliance is located above the maximum installation height, the area covered is larger, but the level of illumination might be below the minimum required for occupant notification. In that instance, the performance-based alternative of 18.5.5.7 must be used to determine the required

visual appliance intensity needed to achieve the minimum level of illumination for that installation height.

It is important to remember that where a dimension is listed in inches, the intended precision is 1 in. (see A.1.6.5).

18.5.5.4* Visual notification appliances listed for mounting parallel to the floor shall be permitted to be located on the ceiling or suspended below the ceiling.

Visual appliances that "look down" do not have to be installed on the ceiling — they can be suspended below the ceiling, even though Table 18.5.5.5.1(b) uses the term *ceiling-mounted*.

A.18.5.5.4 Visual notification appliances must be listed for either wall mounting or ceiling mounting. The effectiveness of ceiling-mounted appliances does not depend on them being mounted on a surface. Therefore, the Code permits them to be suspended below the ceiling using proper electrical installation methods. Appliances mounted parallel to the floor, whether on a ceiling or suspended, can sometimes significantly reduce installation costs and provide better coverage.

In convention spaces and areas with racking and shelving, wall-mounted appliances are frequently obstructed or subjected to mechanical damage. Ceiling mounting (or suspending) the appliances can prevent problems and increases the ability for the appliance to cover the floor area through direct and indirect signaling. See A.18.5.4.

18.5.5.5* Spacing in Rooms.

A.18.5.5.5 The visual notification appliance intensities listed in Table 18.5.5.5.1(a) or Table 18.5.5.5.1(b), 18.5.5.6, or Table 18.5.5.8.3 or determined in accordance with the performance requirements of 18.5.5.7 are the minimum required intensities. It is acceptable to use a higher intensity visual notification appliance in lieu of the minimum required intensity.

Areas large enough to exceed the rectangular dimensions given in Figure A.18.5.5.5(a) through Figure A.18.5.5.5(c) require additional appliances. Often, proper placement of appliances can be facilitated by breaking down the area into multiple squares and dimensions that fit most appropriately *[see Figure A.18.5.5.5(a) through Figure A.18.5.5.5(d)]*. An area that is 40 ft (12.2 m) wide and 80 ft (24.4 m) long can be covered with two 60 cd appliances. Irregular areas and areas with dividers or partitions need more careful planning to make certain that at least one 15 cd appliance is installed for each 20 ft × 20 ft (6.1 m × 6.1 m) area and that light from the appliance is not blocked.

Figure A.18.5.5.5(a) demonstrates how a nonsquare or nonrectangular room can be fitted into the spacing allocation of Table 18.5.5.5.1(a) and Table 18.5.5.5.1(b). Figure A.18.5.5.5(b) demonstrates how to divide a room or area into smaller areas to enable the use of low intensity visual notification appliances. Figure A.18.5.5.5(c) and Figure A.18.5.5.5(d) show the correct and incorrect placement of multiple visual notification appliances in a room.

Δ **18.5.5.5.1*** Spacing shall be in accordance with either Table 18.5.5.5.1(a) and Figure 18.5.5.5.1 or Table 18.5.5.5.1(b).

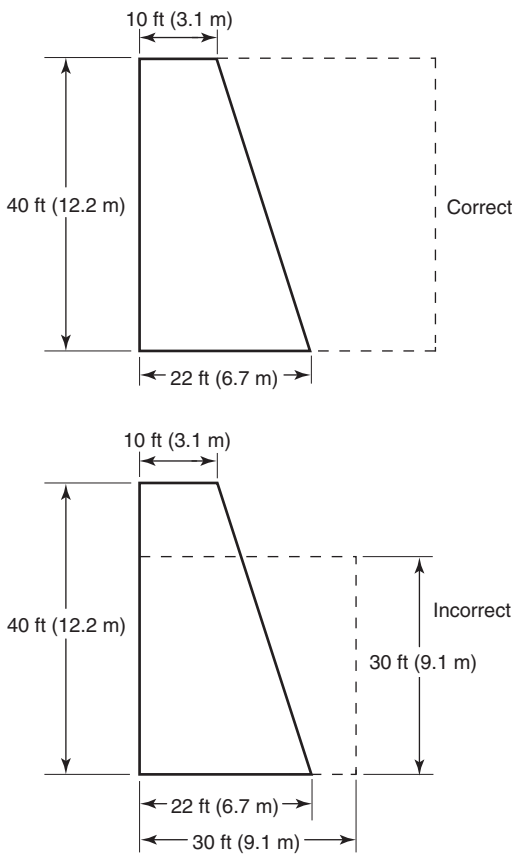

Note: Broken lines represent imaginary walls.

FIGURE A.18.5.5.5(a) *Irregular Area Spacing.*

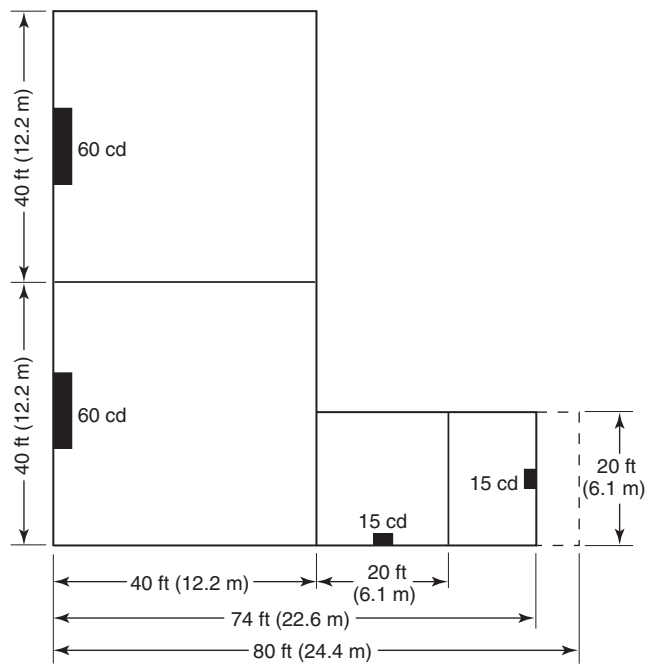

Note: Broken lines represent imaginary walls.

FIGURE A.18.5.5.5(b) *Spacing of Wall-Mounted Visual Notification Appliances in Rooms.*

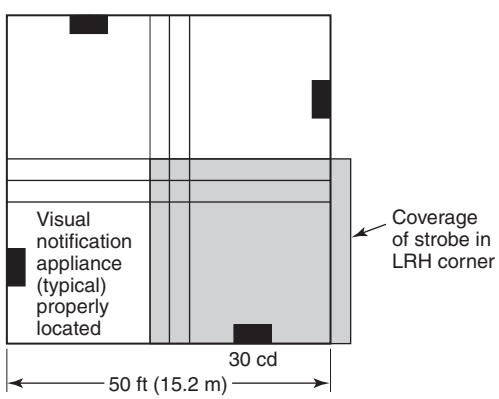

Δ ***FIGURE A.18.5.5.5(c)*** *Room Spacing Allocation — Correct.*

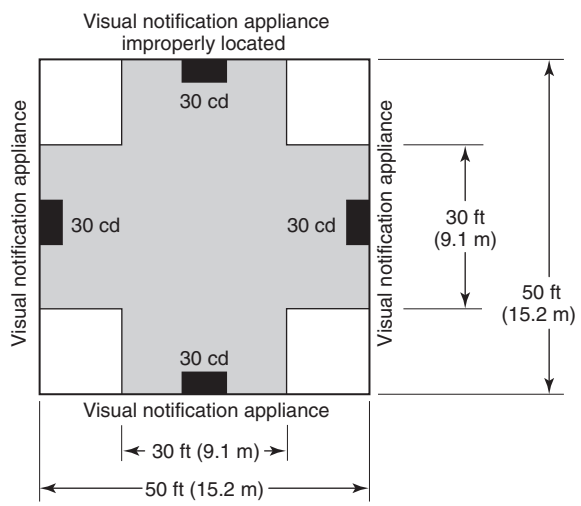

Δ ***FIGURE A.18.5.5.5(d)*** *Room Spacing Allocation — Incorrect.*

Δ ***TABLE 18.5.5.5.1(a)*** *Room Spacing for Wall-Mounted Visual Notification Appliances*

Maximum Room Size		***Minimum Required Light Output [Effective Intensity (cd)]***	
ft	***m***	***One Visual Notification Appliance per Room***	***Four Visual Notification Appliances per Room (One per Wall)***
20 × 20	6.10 × 6.10	15	NA
28 × 28	8.53 × 8.53	30	NA
30 × 30	9.14 × 9.14	34	NA
40 × 40	12.2 × 12.2	60	15
45 × 45	13.7 × 13.7	75	19
50 × 50	15.2 × 15.2	94	30
54 × 54	16.5 × 16.5	110	30
55 × 55	16.8 × 16.8	115	30
60 × 60	18.3 × 18.3	135	30
63 × 63	19.2 × 19.2	150	37
68 × 68	20.7 × 20.7	177	43
70 × 70	21.3 × 21.3	184	60
80 × 80	24.4 × 24.4	240	60
90 × 90	27.4 × 27.4	304	95
100 × 100	30.5 × 30.5	375	95
110 × 110	33.5 × 33.5	455	135
120 × 120	36.6 × 36.6	540	135
130 × 130	39.6 × 39.6	635	185

NA: Not allowable.

Δ ***TABLE 18.5.5.5.1(b)*** *Room Spacing for Ceiling-Mounted Visual Notification Appliances*

Maximum Room Size		***Maximum Lens Height****		***Minimum Required Light Output (Effective Intensity); One Visual Notification Appliance (cd)***
ft	***m***	***ft***	***m***	
20 × 20	6.1 × 6.1	10	3.0	15
30 × 30	9.1 × 9.1	10	3.0	30
40 × 40	12.2 × 12.2	10	3.0	60
44 × 44	13.4 × 13.4	10	3.0	75
20 × 20	6.1 × 6.1	20	6.1	30
30 × 30	9.1 × 9.1	20	6.1	45
44 × 44	13.4 × 13.4	20	6.1	75
46 × 46	14.0 × 14.0	20	6.1	80
20 × 20	6.1 × 6.1	30	9.1	55
30 × 30	9.1 × 9.1	30	9.1	75
50 × 50	15.2 × 15.2	30	9.1	95
53 × 53	16.2 × 16.2	30	9.1	110
55 × 55	16.8 × 16.8	30	9.1	115
59 × 59	18.0 × 18.0	30	9.1	135
63 × 63	19.2 × 19.2	30	9.1	150
68 × 68	20.7 × 20.7	30	9.1	177
70 × 70	21.3 × 21.3	30	9.1	185

*This does not preclude mounting lens at lower heights.

N **A.18.5.5.5.1** In rooms with an average ambient level greater than 500 lx, visual notification appliance spacing should be reduced by 30 percent (i.e., listed spacing × 0.7) or the required effective candela should be increased by 100 percent (i.e., effective candela × 2.0).

Ambient light levels have an effect on the proper candela ratings in indirect viewing of visual notification appliances. The amount of ambient light is normally from two sources: artificial lighting and natural light from outside.

In rooms or areas requiring artificial illumination, the ambient lux value for selecting candela values should be based on the maximum light intensity that the artificial light sources provide.

In rooms or areas that have natural outside light, the ambient lux value should be that of the maximum light level with the shades or curtains fully open during daylight hours and with the artificial lighting illuminated.

Ambient light can be measured using a calibrated light meter in the approximate center of the room, 4 ft (1.2 m) above the floor, with the sensor facing upward. The light meter should measure light level from 0 to 10,000 lx with a precision accuracy of ±5 percent.

For design purposes, typical ambient illumination for various locations and activities are shown in Table A.18.5.5.5.1 and can be used as a guide for the selection of appropriate visual signal intensity.

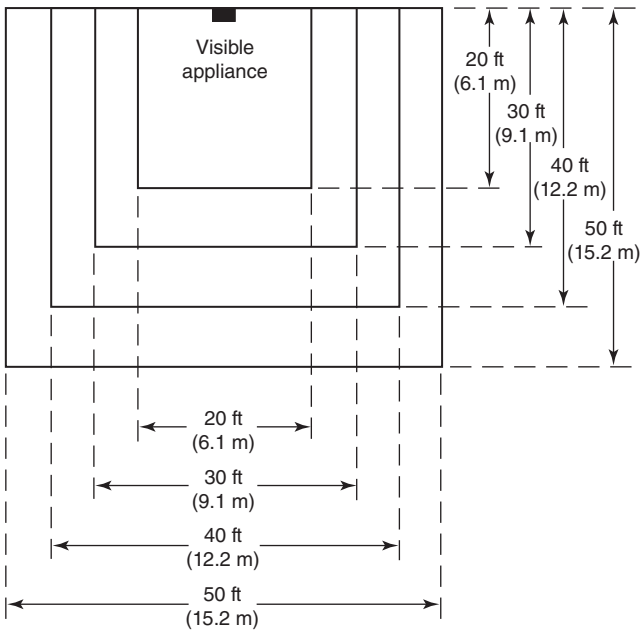

Δ ***FIGURE 18.5.5.5.1*** *Room Spacing for Wall-Mounted Visual Notification Appliances.*

TABLE A.18.5.5.5.1 *Typical Ambient Illumination for Various Locations*

Locations	***Illumination (lx)***
Unoccupied rooms (only emergency lighting active)	100–150
Warehouses, homes, theaters, archives	150
Classrooms	250
Normal offices, study library, show rooms, laboratories	500
Supermarkets, mechanical workshops	750
Detailed work spaces, operating rooms	1000

Note: Table derived from "Recommended Light Levels," published by National Optical Astronomy Observatory.

The first guidelines for the use of flashing lights for fire alarm systems appeared in the 1985 edition of NFPA 72G, *Guide for the Installation, Maintenance, and Use of Notification Appliances for Protective Signaling Systems.* The guide recognized that visual signaling is dependent on the signal-to-noise ratio — that is, the alerting appliance must exceed the background ambient illumination by some amount to be noticed by occupants. When NFPA 72G was incorporated into the 1993 edition of *NFPA 72*, the consideration of ambient light levels was not included. The newest research shows that, as greater levels of ambient illumination are provided, it might be necessary to reconsider the level of illumination needed for alerting.

18.5.5.5.2 Visual notification appliances shall be installed in accordance with Table 18.5.5.5.1(a) or Table 18.5.5.5.1(b) using one of the following:

(1) A single visual notification appliance.

(2)* Two groups of visual notification appliances, where visual notification appliances of each group are synchronized, in the same room or adjacent space within the field of view. This shall include synchronization of visual appliances operated by separate systems.

(3) More than two visual notification appliances or groups of synchronized appliances in the same room or adjacent space within the field of view that flash in synchronization.

A.18.5.5.5.2(2) The field of view is based on the focusing capability of the human eye specified as 120 degrees in the *Illuminating Engineering Society (IES) Lighting Handbook Reference and Application*. The apex of this angle is the viewer's eye. In order to ensure compliance with the requirements of 18.5.5.5.2, this angle should be increased to approximately 135 degrees.

Testing has shown that high flash rates of high-intensity visual notification appliances can pose a potential risk of seizure to people with photosensitive epilepsy. To reduce this risk, more than two visual notification appliances are not permitted in any field of view unless their flashes are synchronized. This does not preclude synchronization of appliances that are not within the same field of view.

Synchronization reduces the chances that visual notification appliances could induce seizures in persons with photosensitive epilepsy. The flash rate is such that two appliances or groups of synchronized appliances not flashing in unison cannot produce a flash rate that is considered dangerous. If more than two appliances or groups of synchronized appliances can be viewed at the same time, they must be synchronized.

Paragraphs 18.5.5.5 and 18.5.5.6 present prescriptive requirements through preset designs that can be used for a variety of actual field conditions requiring these appliances. Paragraph 18.5.5.7 contains a performance-based alternative for determining visual notification appliance coverage. A visual notification appliance intensity greater than that specified for a certain room size is permitted, provided the limit of 18.5.3.5 is not exceeded.

Although Table 18.5.5.5.1(b) uses the term *ceiling-mounted visual appliances,* the visual appliances can be suspended below the ceiling. See 18.5.5.4 and 18.5.5.5.6. Similarly, although Table 18.5.5.5.1(a) uses the term *wall-mounted visual appliances*, the appliances can also be mounted on the sides of columns.

18.5.5.5.3 Room spacing in accordance with Table 18.5.5.5.1(a) and Figure 18.5.5.5.1 for wall-mounted appliances shall be based on locating the visual notification appliance at the halfway distance of the wall.

Δ **18.5.5.5.4** In square rooms with appliances not centered or in nonsquare rooms, the effective intensity (cd) from one wall-mounted visual notification appliance shall be determined by maximum room size dimensions obtained either by measuring the distance to the farthest wall or by doubling the distance to the farthest adjacent wall, whichever is greater, as required by Table 18.5.5.5.1(a) and Figure 18.5.5.5.1.

18.5.5.5.5 If a room configuration is not square, the square room size that allows the entire room to be encompassed or allows the room to be subdivided into multiple squares shall be used.

FAQ What method can be used to provide proper coverage for irregular spaces?

The key to proper coverage in irregular spaces is to divide the space into a series of squares and provide proper coverage for each square as if it were an independent space. Exhibit 18.26 illustrates this concept. Synchronization might be required, as described in 18.5.5.5.2. Exhibit 18.27 depicts a ceiling-mounted visual appliance centered in a room.

EXHIBIT 18.26

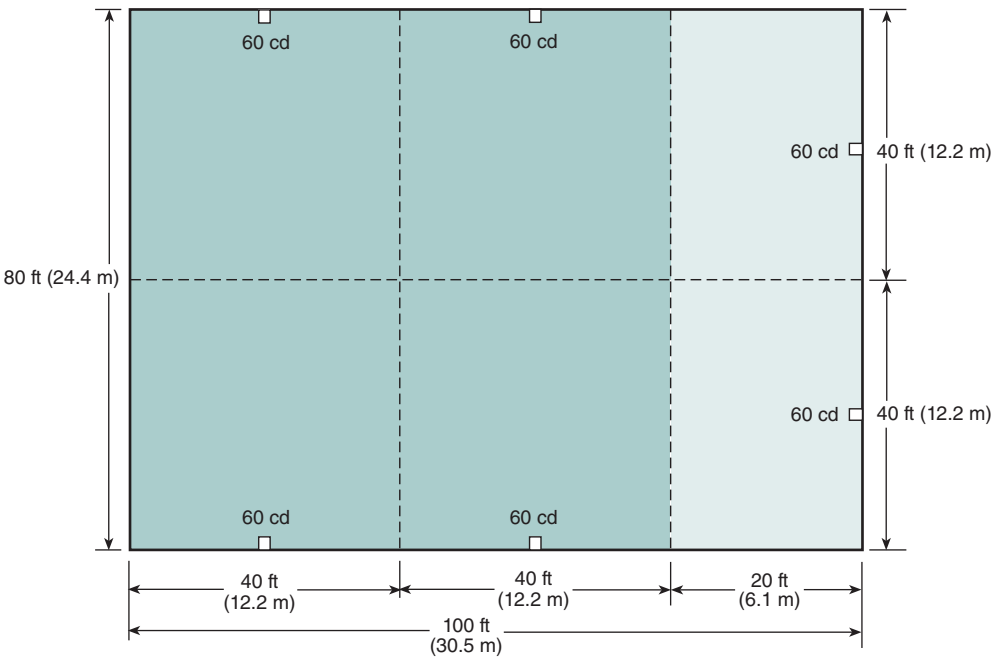

Irregular Floor Plan Showing Notification Appliances for Required Locations.

EXHIBIT 18.27

Single Ceiling-Mounted Visual Appliance. (Source: R. P. Schifiliti Associates, Inc., Reading, MA)

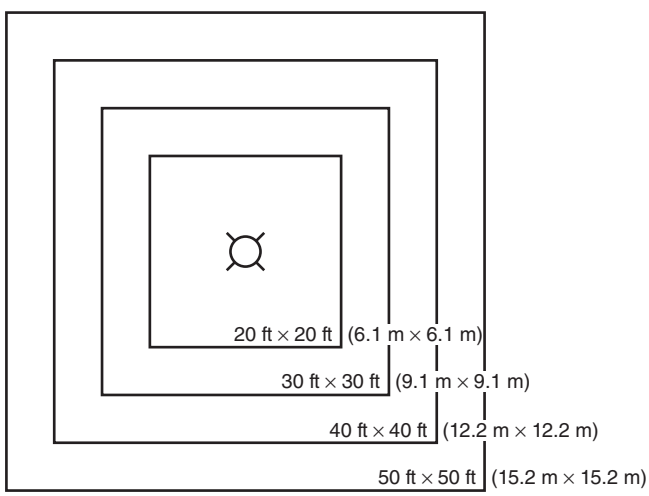

18.5.5.5.6* If ceiling heights exceed 30 ft (9.1 m), ceiling-mounted visual notification appliances shall be suspended at or below 30 ft (9.1 m) or at the mounting height determined using the performance-based alternative of 18.5.5.7, or wall-mounted visual notification appliances shall be installed in accordance with Table 18.5.5.5.1(a).

A.18.5.5.5.6 This subsection is also intended to permit ceiling-mounted visual notification appliances to be suspended below the ceiling, provided the visual notification appliance height is not below the viewing plane for any ceiling height.

Performance-based methods are permitted for horizontally mounted visual notification appliances. Visual notification appliances can be mounted at any height above the floor as permitted by 18.5.5.5.6 even if the appliance is below the ceiling. See Exhibit 18.28.

The Code does not provide guidance or requirements for spaces with high ceilings. In some high-ceiling spaces, such as a gymnasium or a large atrium, suspending or wall mounting appliances in accordance with the prescriptive requirements might not be feasible. In spaces such as gymnasiums and auditoriums, installing high intensity visual notification appliances along the perimeter is probably adequate even if the coverage in the center of the space fails to meet the performance requirement of 18.5.5.7. This is because wherever you are in the space, you will have a direct view of an operating appliance. Thus, there is no need to rely on the indirect signaling requirements of the Code. This alternative solution would require approval of the authority having jurisdiction.

For some spaces, performance-based calculations or alternative methods for notification might need to be considered, such as high-intensity revolving beacons, high-intensity indirect viewing appliances, or even the flashing of some or all of the building lights. However, due to potential reliability issues and general lack of test data, most of these methods are not yet recognized by the Code.

Nevertheless, careful engineering might show these methods to be effective and more reliable than suspending standard appliances from the ceiling or mounting them on the wall in large congested spaces, such as warehouse stores or convention halls. Some methods, such as the use of building lighting systems, might use circuits that are not monitored for integrity. However, the large number of lighting units versus the number required for effective alerting combined with the use of branch circuits and daily operation might result in higher overall system availability and reliability. In applying alternative methods, the requirements of Section 1.5 must be observed.

Another possible solution for high-ceiling spaces is a performance-based design using a combination of direct and indirect signaling as described in A.18.5.4 for warehouse-type spaces.

Δ **18.5.5.5.7** Table 18.5.5.5.1(b) shall be used if the ceiling-mounted visual notification appliance is at the center of the room.

N **18.5.5.5.8** If the ceiling-mounted visual notification appliance is not located at the center of the room, the effective intensity (cd) shall be determined by doubling the distance from the appliance to the farthest wall to obtain the maximum room size.

18.5.5.5.9

18.5.5.6* Spacing in Corridors.

A.18.5.5.6 Because the occupants are usually alert and moving, and because their vision is focused by the narrowness of the space, corridor signaling is permitted to be by direct viewing of lower-intensity (15 cd) appliances. That is, the alerting is intended to be done by direct viewing of the visual notification appliance, not necessarily by its reflection off of surfaces (indirect viewing) as required for rooms in 18.5.5.5.

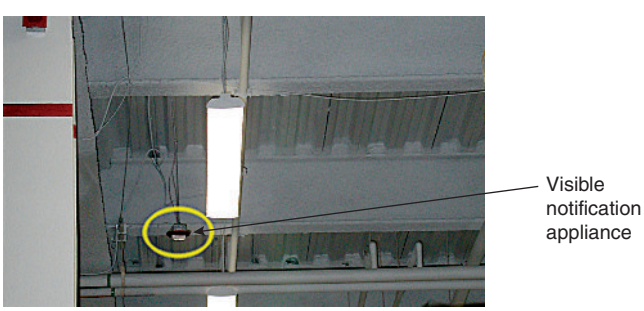

EXHIBIT 18.28

Visual Notification Appliance Suspended Below Ceiling. (Source: R. P. Schifiliti Associates, Inc., Reading, MA)

Note that it is acceptable to use 18.5.5.5 (Spacing in Rooms) to determine the number and location of visual notification appliances in corridors. If 18.5.5.5 is used, it is not necessary to have a corridor visual notification appliance within 15 ft (4.6 m) of the end of the corridor.

See Figure A.18.5.5.6 for corridor spacing for visual notification appliances.

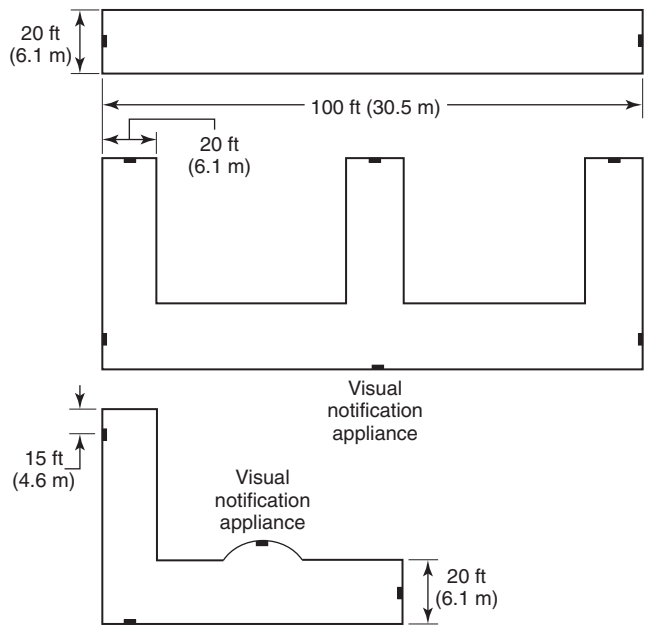

Δ

FIGURE A.18.5.5.6 *Corridor Spacing for Visual Notification.*

18.5.5.6.1 The installation of visual notification appliances in corridors 20 ft (6.1 m) or less in width shall be in accordance with the requirements of either 18.5.5.5 or 18.5.5.6.

System Design Tip

The designer is permitted to treat the corridor as a room and use the more stringent requirements of indirect signaling (see 18.5.5.5) in place of the requirements of 18.5.5.6. This is often very effective for elevator lobbies and main entrances of offices, hotels, and other spaces where the corridor widens.

18.5.5.6.2 Paragraph 18.5.5.6 shall apply to corridors not exceeding 20 ft (6.1 m) in width.

18.5.5.6.3 In a corridor application, visual notification appliances shall be rated not less than 15 cd.

18.5.5.6.4 Corridors greater than 20 ft (6.1 m) wide shall comply with the spacing requirements for rooms in accordance with 18.5.5.5.

FAQ

Are the spacing requirements for corridors based on direct or indirect viewing of appliances?

The intensity and spacing requirements for visual notification appliances positioned in corridors less than 20 ft (6.1 m) wide are less stringent than for those in rooms and are based on direct rather than indirect viewing of appliances. Occupants of a corridor are usually moving and alert, requiring fewer appliances, which results in greater spacing in long corridors. Appliances rated no more than 15 cd are required in corridors less than 20 ft (6.1 m) wide. Corridors that are more than 20 ft (6.1 m) wide are treated the same as rooms.

18.5.5.6.5* Visual notification appliances shall be located not more than 15 ft (4.6 m) from the end of the corridor with a separation not greater than 100 ft (30.5 m) between appliances.

A.18.5.5.6.5 Visual notification appliances in corridors are permitted to be mounted on walls or on ceilings in accordance with 18.5.5.6. Where there are more than two appliances in a field of view, they need to be synchronized.

Note that it is acceptable to use 18.5.5.5 (Spacing in Rooms) to determine the number and location of visual notification appliances in corridors. If 18.5.5.5 is used, it is not necessary to have a corridor visual notification appliance within 15 ft (4.5 m) of the end of the corridor. It is not the intent of this section to require visual notification appliances at or near every exit or exit access from a corridor.

It might be possible to share notification appliances under some conditions where corridors change direction or intersect. This arrangement will result in the proper coverage with fewer appliances. This is shown graphically in Figure A.18.5.5.6. See also 18.5.5.6.8.

18.5.5.6.6 If there is an interruption of the concentrated viewing path, such as a fire door, an elevation change, or any other obstruction, the area shall be treated as a separate corridor.

18.5.5.6.7 In corridors where more than two visual notification appliances are in any field of view, they shall flash in synchronization.

Note that this requirement addresses the situation where more than two visual appliances can be viewed at the same time. An L-shaped corridor with two appliances in one leg and one in the other leg would not require synchronization. This is true because even though the effect from the third visual notification appliance might be seen, the third visual notification appliance cannot be directly viewed at the same time as the other two.

Where room visual notification appliances are required to be synchronized and where corridor visual notification appliances require synchronization, the corridor appliances can also be synchronized with the room appliances. However, as permitted by 18.5.5.5.2(2), the overall system would be acceptable provided that the viewer does not see more than two unsynchronized groups of visual notification appliances, where the synchronized room appliances would be one group and the synchronized corridor appliances would be the second group.

18.5.5.6.8 Wall-mounted visual notification appliances in corridors shall be permitted to be mounted on either the end wall or the side wall of the corridor in accordance with spacing requirements of 18.5.5.6.5.

18.5.5.7* Performance-Based Alternative.

Δ **A.18.5.5.7** A design that delivers a minimum illumination of 0.0375 lumens/ft^2 (footcandles) [0.4036 lumens/m^2 (lux)] to all occupiable spaces where visual notification is required is considered to meet the minimum light intensity requirements of 18.5.5.5.2(1). This level of illumination has been shown to alert people by indirect viewing (reflected light) in a large variety of rooms with a wide range of ambient lighting conditions.

The illumination from a visual notification appliance at a particular distance is equal to the effective intensity of the appliance divided by the distance squared (the inverse square law). Table 18.5.5.5.1(a) and Table 18.5.5.5.1(b) are based on applying the inverse square law to provide an illumination of at least 0.0375 lumens/ft^2 (0.4037 lumens/m^2) throughout each room size. For example, a 60 cd effective intensity appliance in a 40 ft × 40 ft (12.2 m × 12.2 m) room produces 0.0375 lumens/ft^2 (0.4037 lumens/m^2) on the opposite wall 40 ft (12.2 m) away [60 ÷ (40 ft)^2 or (60 ÷ (12.2 m)^2)]. This same 60 cd effective intensity appliance produces 0.0375 lumens/ft^2 (0.4037 lumens/m^2) on the adjacent wall 20 ft (6.1 m) away

[60 × 25% ÷ (20 ft)^2 or (60 × 25% ÷ (12.2 m)^2)] where the minimum light output of the appliance at 90 degrees off-axis is 25 percent of rated output per ANSI/UL 1971, *Standard for Signaling Devices for the Hearing Impaired*. Similarly, a 110 cd visual notification appliance will produce at least 0.0375 lumens/ft^2 (0.4037 lumens/m^2) in a 54 ft × 54 ft (16.5 m × 16.5 m) room. Calculated intensities in Table 18.5.5.5.1(a) and Table 18.5.5.5.1(b) have been adjusted to standardize the intensity options of presently available products and take into account additional reflections in room corners and higher direct viewing probability when there is more than one appliance in a room.

The application of visual notification appliances in outdoor areas has not been tested and is not addressed in this Code. Visual notification appliances that are mounted outdoors should be listed for outdoor use (under ANSI/UL 1638, *Visible Signaling Devices for Fire Alarm and Signaling Systems, Including Accessories*, for example) and should be located for direct viewing because reflected light will usually be greatly reduced.

System Design Tip

The tables for visual notification appliances form a prescriptive solution for visual signaling and are relatively easy to apply. The subparagraphs of 18.5.5.7 offer an alternative performance-based method for designing visual notification systems.

18.5.5.7.1 Any design that provides a minimum of 0.0375 lumens/ft^2 (0.4036 lumens/m^2) of illumination at any point within the covered area at all angles specified by the polar dispersion planes for wall- or ceiling-mounted public mode visual notification appliances in ANSI/UL 1971, *Standard for Signaling Devices for the Hearing Impaired*, ANSI/UL 1638, *Visible Signaling Devices for Fire Alarm and Signaling Systems, Including Accessories,* or equivalent, as calculated for the maximum distance from the nearest visual notification appliance, shall be permitted in lieu of the requirements of 18.5.5, excluding 18.5.5.8.

This level of illumination is required to be achieved at any point within the covered space. The minimum level of illumination applies to points within the covered area at each angle specified in the product test standard. These are the only points for which listing test data might be available for use in the calculations.

18.5.5.7.2 Documentation provided to the authority having jurisdiction shall include the following:

(1) Inverse Square Law calculations using each of the vertical and horizontal polar distribution angles in ANSI/UL 1971, *Standard for Signaling Devices for the Hearing Impaired*, or equivalent.
(2) The calculations shall account for the effects of polar distribution using one of the following:
    (a) The percentages from the applicable table(s) in ANSI/UL 1971, *Standard for Signaling Devices for the Hearing Impaired*, or equivalent
    (b) The actual results of laboratory tests of the specific appliance to be used as recorded by the listing organization

The performance objective must be achieved throughout the covered area. However, as noted in 18.5.5.7.2(1) and 18.5.5.7.2(2), proof of compliance is met by providing calculations for the space at a discrete number of points as defined by the product listing standard. Commentary Tables 18.5 and 18.6 show the different points used to validate a visual appliance's performance. The standard minimum intensities at these points or the actual polar dispersion intensities provided by the manufacturer can be used. Proof of compliance is not intended to be achieved by testing at the installation site. Calculation and subsequent inspection of the installation are considered sufficient.

COMMENTARY TABLE 18.5 *Required Minimum Percentage for Horizontal Dispersion*

Degrees to Left and Right	*Percent of Rating*
0	100
5	90
10	90
15	90
20	90
25	90
30	75
35	75
40	75
45	75
50	55
55	45
60	40
65	35
70	35
75	30
80	30
85	25
90	25
Compound 45 to the right	24
Compound 45 to the left	24

COMMENTARY TABLE 18.6 *Required Minimum Percentage for Vertical Dispersion*

Degrees	*Percent of Rating*
0	100
5	90
10	90
15	90
20	90
25	90
30	90
35	65
40	46
45	34
50	27
55	22
60	18
65	16
70	15
75	13
80	12
85	12
90	12

FAQ

In applying the performance-based method of 18.5.5.7, what angles must be considered?

The required performance level must be calculated for each of the angles specified in ANSI/UL 1971. For wall-mounted units, the angles include 37 horizontal angles on the plane of the visual notification appliance, 19 vertical angles, and 2 compound angles. These angles with the associated percentage of rating are provided in Commentary Tables 18.5 and 18.6 and are visually depicted in Exhibit 18.29.

Note that the prescriptive requirements fall short of the performance requirements. The accompanying Closer Look feature examines this gap between prescriptive and performance requirements.

Closer Look

The Discrepancy Between Prescriptive and Performance Requirements

A performance-based design requires a minimum illumination of 0.0375 lm/ft^2 (0.4036 lm/m^2). Exhibit 18.29 illustrates each of these points for a wall-mounted appliance. With a visual notification appliance rated 15 cd eff, this minimum level is reached at 20 ft (6.1 m). From Commentary Table 18.6, the appliance may have 90 percent of its rating at an angle of 25 degrees. This yields an illumination level that falls short of the minimum performance level prior to reaching the corner of a 20 ft × 20 ft (6.1 m × 6.1 m) room. The performance level actually falls short of the walls at angles up to 35 degrees. The maximum room size, based on the performance calculations for the horizontal plane, is approximately 17 ft × 17 ft (5.2 m × 5.2 m) not 20 ft × 20 ft (6.1 m × 6.1 m) as listed in the prescriptive table for a 15 cd visual appliance.

Closer Look *(Continued)*

Why is there a discrepancy between the prescriptive requirements and the performance requirements? Various sources have stated that the intended performance was an illumination level of 0.0375 lm/ft^2 (0.4036 lm/m^2) at each of the angles. However, calculations show this not to be the case for the tables. Another theory was that light reflection between walls in the corners increased the illumination, with a suggested additive value of 10 percent, to meet the performance requirements. However, some values fall short by more than 10 percent. Also, large open spaces do not have walls to reflect light.

The question is whether 0.0375 lm/ft^2 (0.4036 lm/m^2) should be achieved at all angles or if the decreased levels consistent with the prescriptive requirements are sufficient. The fact that the prescriptive requirements do not result in this illumination level on the walls does not lead to the conclusion that the tables are in error. However, until sufficient information is available to revise the prescriptive tables, the performance-based approach includes a comparatively conservative requirement.

NFPA 720

18.5.5.8 Sleeping Areas.

18.5.5.8.1 Combination smoke detectors and visual notification appliances or combination smoke alarms and visual notification appliances shall be installed in accordance with the applicable requirements of Chapters 17, 18, 23, and 29.

EXHIBIT 18.29

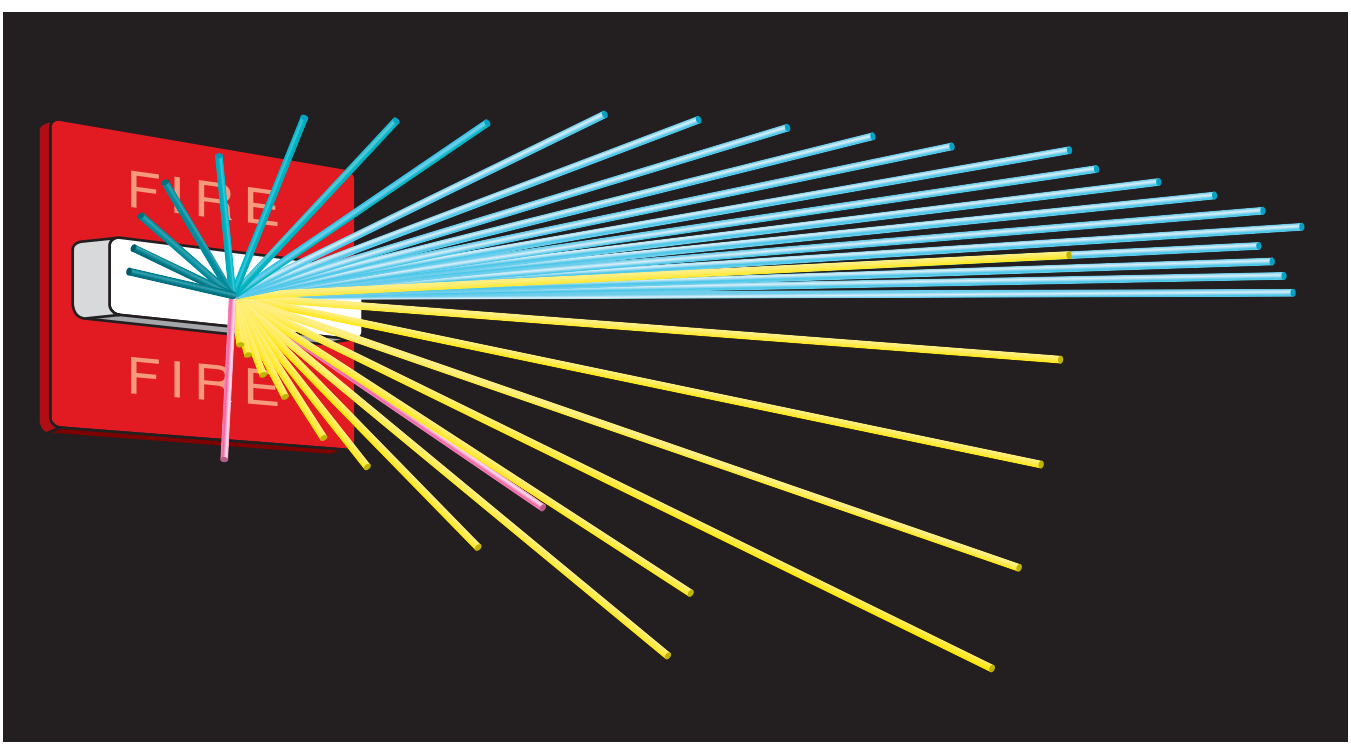

Artist Rendering of Dispersion Angles for a Listed Wall-Mounted Visual Notification Appliance. (Source: Stephan Laforest, Summit Sprinkler Design Services, Inc.)

N **18.5.5.8.2** Combination carbon monoxide detectors or alarms with visual notification appliances shall be located in accordance with the applicable requirements for the visual notification appliance and the applicable requirements for the carbon monoxide detector or alarm of Chapters 17, 18, 23, and 29.

This reinforces that the detector coverage requirements of Chapter 17 and smoke alarm coverage of Chapter 29 apply to combination units.

18.5.5.8.3* Table 18.5.5.8.3 shall apply to the minimum required intensity of visual notification appliances in sleeping areas after establishing the mounting height.

Δ ***TABLE 18.5.5.8.3*** *Effective Intensity Requirements for Sleeping Area Visual Notification Appliances*

Distance from Ceiling to Top of Lens		***Minimum Intensity (cd)***
in.	***mm***	
≥24	≥610	110
<24	<610	177

Δ **A.18.5.5.8.3** For sleeping areas, the use of visual notification appliances with other intensities at distances greater than 16 ft (4.9 m) has not been researched and is not addressed in this Code.

This section on visual notification appliances for alerting sleeping persons intends that stand-alone visual notification appliances be located in accordance with 18.5.5. If the visual notification appliance is an integral part of a smoke detector or smoke alarm, the unit must be mounted in accordance with the requirements for the smoke detector or smoke alarm. In either case (stand-alone or combination), Table 18.5.5.8.3 is then consulted to determine the minimum required intensity. Where the appliance is mounted less than 24 in. (610 mm) from the ceiling, it must have a minimum 177 cd effective rating because it might be in a smoke layer at the time it is called upon to operate. If the appliance is 24 in. (610 mm) or more from the ceiling, it is permitted to be rated 110 cd effective or more. Note that the requirement for increasing the intensity when mounted close to the ceiling applies only to visual notification appliances used in sleeping areas to awaken sleeping people. It is assumed that in nonsleeping situations, a visual notification appliance is not needed to alert someone if there is a developing smoke layer.

In sleeping rooms, smoke can accumulate at the ceiling while a person is asleep and unaware. If a visual notification appliance is being used to awaken the person in the room, smoke might partially obscure the appliance and reduce the effective intensity. For this reason, if the visual notification appliance is less than 24 in. (610 mm) from the ceiling, it must have a higher rating (177 cd eff). This requirement does not apply to nonsleeping spaces because a visual notification appliance should not be needed to notify a non-sleeping person in this manner.

The requirement does not change the mounting height requirement for wall-mounted visual notification appliances in 18.5.5. The hierarchy for sleeping spaces is as follows:

1. If the visual notification appliance is part of a smoke detector or smoke alarm, the unit must be mounted per the requirements for smoke detectors and smoke alarms. This places the appliance either on the ceiling or on the wall within 12 in. (300 mm) of the ceiling. The unit must be a 177 cd eff appliance and be listed for wall or ceiling mounting as required.

2. If the visual notification appliance is not part of a smoke detector or smoke alarm, and the unit is to be wall-mounted, it must be located at least 80 in. (2.03 m) above the floor but not more than 96 in. (2.44 m) above the floor. If that places it within 24 in. (610 mm) of the ceiling, it must have a 177 cd eff rating. If it is 24 in. (610 mm) or more from the ceiling, it can be a 110 cd eff appliance.
3. If the visual notification appliance is not part of a smoke detector or smoke alarm, and the unit is to be ceiling-mounted, it must be a 177 cd eff appliance.

In the unlikely situation where the ceiling height of a sleeping area is less than 80 in. (2.03 m), the visual notification appliance should be located as high as possible — at ceiling level, whether wall-mounted or ceiling-mounted. The visual notification appliance must then be a 177 cd eff appliance. The critical measurement is the distance to the pillow, which cannot exceed 16 ft (4.87 m) measured horizontally.

18.5.5.8.4 For rooms with a linear dimension greater than 16 ft (4.9 m), the visual notification appliance shall be located within 16 ft (4.9 m) of the pillow.

Although the layout of sleeping rooms may change over time, every effort should be made to position the visual appliance close to the pillow area and point directly toward it. This will provide the highest level of illumination based on the listed polar distribution.

18.5.6 Location of Visual Notification Appliances for Wide-Area Signaling.

Visual notification appliances for wide-area signaling shall be installed in accordance with the requirements of the authority having jurisdiction, approved design documents, and the manufacturer's published instructions to achieve the required performance.

18.6* Visual Characteristics — Private Mode.

Visual notification appliances used in the private mode shall be of a sufficient quantity and intensity and located so as to meet the intent of the user and the authority having jurisdiction.

FAQ What are the uses of many private mode visual notification appliances?

Visual notification appliances in the private mode are often used in conjunction with an audible notification appliance to call the viewer's attention to the visual appliance. Many visual appliances in the private mode provide annunciated information that helps the viewer to locate the source of an alarm or a supervisory or trouble signal. A remote annunciator is an example of this usage.

The opposite can also be true. For example, a private mode flashing light or revolving beacon at a machine operator's station might be used to tell the operator to go to a designated location where an intelligible voice message can be heard. See the FAQ following A.18.4.11.3.

A.18.6 Though the number of visual notification appliances might be reduced in private operating mode settings, visual notification appliances might still need to be considered in spaces occupied by the public or the hearing impaired or subject to other laws or codes.

18.7 Supplementary Visual Signaling Method.

A supplementary visual notification appliance shall be intended to augment an audible or visual signal.

A supplementary visual notification appliance is not intended to serve as one of the required visual notification appliances. Examples include nonrequired remote annunciators and a nonrequired flashing appliance in a security or maintenance office. See the definition of the term *supplementary* in 3.3.296.

18.7.1 A supplementary visual notification appliance shall comply with its marked rated performance.

Because this appliance does not satisfy a requirement but provides a supplemental function, its function must be marked and rated. This requirement discourages manufacturers from overrating the marking, which might not be detected because the appliances are supplementary, and gives the authority having jurisdiction a basis for verifying the performance of such appliances.

18.7.2 Supplementary visual notification appliances shall be permitted to be located less than 80 in. (2.03 m) above the floor.

A supplementary appliance does not need to meet the mandatory mounting height requirement for visual appliances.

18.8 Textual Audible Appliances.

18.8.1 Loudspeaker Appliances.

18.8.1.1 Loudspeaker appliances shall comply with Section 18.4.

18.8.1.2* The sound pressure level, in dBA, of the tone produced by a signaling loudspeaker shall comply with all the requirements in 18.4.4 (public), 18.4.5 (private), or 18.4.6 (sleeping) for the intended mode or shall comply with the requirements of 18.4.7 (narrow band tone signaling).

A.18.8.1.2 The tone signal is used to evaluate the sound pressure level produced by loudspeaker appliances because of the fluctuating sound pressure level of voice or recorded messages.

Loudspeaker appliances are textual audible appliances because they are used to deliver intelligible messages to occupants. The term *speaker* is no longer used in this Code to refer to these appliances because it could be used to refer to a person who is speaking.

In addition to conveying textual information, textual audible appliances are used to produce tones to warn occupants to evacuate the protected premises or to alert them that a voice message with instructions is about to follow. Textual audible appliances are audible appliances and must comply with the audibility and mounting requirements of Section 18.4, which also includes the intelligibility requirements of 18.4.1.6 and 18.4.11.

The audibility (SPL) requirement applies to tone signals and not to voice signals because voice is modulated. See 18.4.1.5, 18.4.1.6, and A.18.4.1.6. The test requirements for audible appliances in Chapter 14 include measurement of the alert tone only. The test requirements in Chapter 14 only require that voice messages be verified as distinguishable and understandable and permit a simple qualitative assessment — a simple listen test. While quantitative evaluations using intelligibility meters are permitted and described in Annex D, they are not required. See Annex D for additional discussion. Exhibit 18.30 shows a typical textual audible appliance.

EXHIBIT 18.30

Textual Audible Appliance. (Source: Eaton, Long Branch, NJ)

18.8.2 Telephone Appliances. Telephone appliances shall be in accordance with Section 24.8.

18.9* Textual and Graphical Visual Appliances.

EXHIBIT 18.31

Textual Visual Appliance (Annunciator). (Source: Silent Knight by Honeywell, Maple Grove, MN)

Examples of textual visual appliances include annunciators, panel displays (LED and LCD), CRTs, screens, and signs. See Exhibit 18.31 for an annunciator that represents a typical textual visual appliance. Exhibit 18.32 is an example of a message board at an airport that might be used as part of an ECS.

A.18.9 Textual and graphical visual appliances are selected and installed to provide temporary text, permanent text, or symbols. Textual and graphical visual appliances are most commonly used in the private mode for fire alarm systems. The use of microprocessors with computer monitors and printers has resulted in the ability to provide detailed information in the form of text and graphics to persons charged with directing emergency response and evacuation. Textual and graphical visual appliances are also used in the public mode to communicate emergency response and evacuation information directly to the occupants or inhabitants of the area protected by the system. For both private mode and public mode signaling, text and graphic annunciators can provide information about pre-alarm, alarm, trouble, and supervisory conditions. Because textual and graphical visual appliances do not necessarily have the ability to alert, they should only be used to supplement audible or visual notification appliances.

Textual and graphical visual information should be of a size and visual quality that is easily read. Many factors influence the readability of textual visual appliances, including the following:

(1) Size and color of the text or graphic
(2) Distance from the point of observation
(3) Observation time
(4) Contrast
(5) Background luminance
(6) Lighting
(7) Stray lighting (glare)
(8) Shadows
(9) Physiological factors

While many of these factors can be influenced by the equipment manufacturer and by the building designers, there is no readily available method to measure legibility.

EXHIBIT 18.32

Message Board.

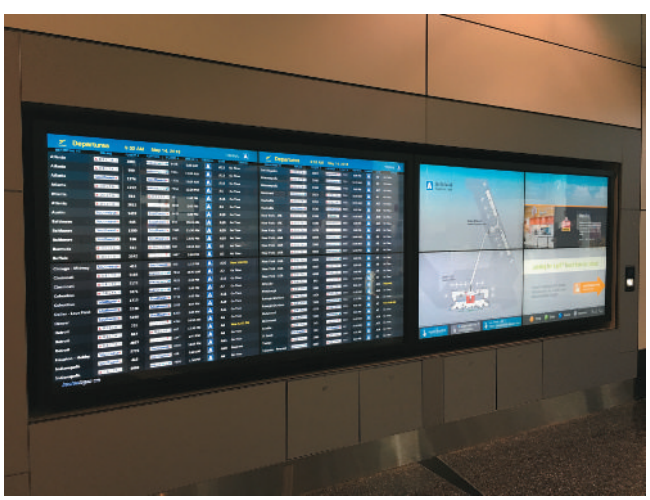

18.9.1 Application.

18.9.1.1 Textual and graphical visual appliances shall be permitted to be used to signal information about fire or other emergency conditions or to direct intended responses to those conditions.

18.9.1.2 This section does not apply to means of egress signs, room identification signs, and other signage that could be required by other governing laws, codes, or standards.

18.9.1.3 Textual visual appliance messages shall be permitted to be static, flashing, or scrolling.

18.9.2 Location.

18.9.2.1 Private Mode. Unless otherwise permitted or required by other governing laws, codes, or standards, or by other parts of this Code or by the authority having jurisdiction, all textual and graphical visual notification appliances in the private mode shall be located in rooms that are accessible only to those persons directly concerned with the implementation and direction of emergency response in the areas protected by the system.

Paragraph 18.9.2.1 limits access to private mode textual visual displays to authorized persons only. For example, in a hospital, the appliance might be intended for viewing only by staff members who must implement and direct emergency plans. The authority having jurisdiction is permitted to specify a more public location for the textual visual appliance, presumably for use by responding emergency personnel.

18.9.2.2 Public Mode. Textual and graphical visual notification appliances used in the public mode shall be located to ensure visibility to the occupants of the protected area or to the intended recipients.

18.9.2.3 Mounting. Desktop and surface-mounted textual and graphical visual notification appliances shall be permitted.

18.9.3 Performance. The information produced by textual and graphical visual appliances shall be clear and legible at the intended viewing distance.

18.9.4* Character and Symbol Requirements and Viewing Distance.

Requirements for text displays include graphical systems as well as text. For types of displays such as simple zone lists, site plans, or programmable video monitors, compliance with the requirements of 18.9.4 will be a matter of field inspection to determine if the visual characteristics meet the intent of the Code. For other cases, the appropriate characteristics will be confirmed as a part of the listing process.

Δ **A.18.9.4** Parts of this section on text characteristics are based on Section 703.5 of the updated accessibility guidelines in the U.S. Access Board's ADA-ABA-AG.

18.9.4.1 This section applies to visual characters and graphic elements and does not address raised characters or braille that could be required by other governing laws, codes, or standards.

18.9.4.2* Characters and symbols shall contrast with their background using either positive contrast (light on a dark background) or negative contrast (dark on a light background).

A.18.9.4.2 Signs are more legible for persons with low vision when characters contrast as much as possible with their background. Additional factors affecting the ease with which the text can be distinguished from its background include shadows cast by lighting sources, surface glare, and the uniformity of the text and its background colors and textures.

Stroke width-to-height ratios are an important part of character legibility and are affected by contrast. Ratios for light characters on a dark background and dark characters on a light background differ because light characters or symbols tend to spread or bleed into the adjacent dark background. To accommodate these differences, recommendations for symbol stroke width-to-character height ratios are as follows:

(1) Positive image — Dark characters on a light background, ratio of 1:6 to 1:8
(2) Negative image — Light characters on a dark background, ratio of 1:8 to 1:10

Source: Federal Aviation Administration (FAA) Human Factors Awareness Course available at http://www.hf.faa.gov/webtraining/Intro/Intro1.htm.

18.9.4.3 Characters and symbols and their background shall have a nonglare finish.

18.9.4.4* Characters shall be permitted to be uppercase or lowercase, or a combination of both.

A.18.9.4.4 The use of all uppercase characters in messages should be avoided as it decreases legibility. The exception is one- or two-word commands or statements such as stop, go, or exit stair.

18.9.4.5 Characters shall be conventional in form and not italic, oblique, script, highly decorative, or of other unusual form and shall use sans serif fonts.

18.9.4.6 Characters shall be selected from fonts where the width of the uppercase letter "O" is 55 percent minimum and 110 percent maximum of the height of the uppercase letter "I".

18.9.4.7* Character and symbol height for appliances other than desktop monitors or displays shall meet all of the following criteria:

(1) Minimum character height shall comply with Table 18.9.4.7.
(2) Viewing distance shall be measured as the horizontal distance between the character and an obstruction preventing further approach towards the appliance.
(3) Character height shall be based on the uppercase letter "I".

For the 2019 edition, Table 18.9.4.7 has been reformatted to make it easier to determine the requirements for different applications. The table also has been expanded to identify requirements clearly for horizontal viewing distances greater than 21 ft (6.4 m).

Δ **A.18.9.4.7** Paragraph 18.9.4.7 and the associated table does not apply to text and graphics displayed on desktop monitors. The Code does not list any specific sizing requirements for desktop monitors. However, 18.9.3 does require them to be clear and legible at the intended viewing distance. Other requirements in 18.9.4 such as contrast, sans serif fonts, and so forth should still apply to desktop displays. The specific requirements of Table 18.9.4.7 are taken directly from Section 703.5 of the updated accessibility guidelines in the U.S. Access Board's ADA-ABA-AG. The table has been reformatted to be consistent with other parts of *NFPA 72*.

18.9.4.8* All characters and symbols displayed by textual and graphical visual notification appliances shall be a minimum of 40 in. (1.02 m) above the ground or finished floor.

A.18.9.4.8 The minimum height for textual and graphic visual appliances is given as 40 in. (1.02 m) above the ground or finished floor. However, the character or symbol sizes should be based on the height of the highest character or symbol displayed by the appliance.

N ***TABLE 18.9.4.7*** *Visual Character and Graphic Symbol Height Based on Height and Distance*

Horizontal Viewing Distance		Minimum Character or Symbol Height for Installed Elevation					
		At 40 in. to 70 in. (1.0 m to 1.8 m) Above the Floor		At Greater Than 70 in. to 120 in. (1.8 m to 3.1 m) Above the Floor		At Greater Than 120 in. (3.0 m) Above the Floor	
ft	*m*	*in.*	*mm*	*in.*	*mm*	*in.*	*mm*
1	0.3	⅝	16	2	51	3	76
2	0.6	⅝	16	2	51	3	76
3	0.9	⅝	16	2	51	3	76
4	1.2	⅝	16	2	51	3	76
5	1.5	⅝	16	2	51	3	76
6	1.8	⅝	16	2	51	3	76
7	2.1	¾	19	2	51	3	76
8	2.4	⅞	22	2	51	3	76
9	2.7	1	25	2	51	3	76
10	3	1 ⅛	29	2	51	3	76
11	3.4	1 ¼	32	2	51	3	76
12	3.7	1 ⅜	35	2	51	3	76
13	4	1 ½	38	2	51	3	76
14	4.3	1 ⅝	41	2	51	3	76
15	4.6	1 ¾	44	2	51	3	76
16	4.9	1 ⅞	48	2 ⅛	54	3	76
17	5.2	2	51	2 ¼	57	3	76
18	5.5	2 ⅛	54	2 ⅜	60	3	76
19	5.8	2 ¼	57	2 ½	64	3	76
20	6.1	2 ⅜	60	2 ⅝	67	3	76
21	6.4	2 ½	64	2 ¾	70	3	76
22	6.7	2 ⅝	67	2 ⅞	73	3 ⅛	79
23	7	2 ¾	70	3	76	3 ¼	83
24	7.3	2 ⅞	73	3 ⅛	79	3 ⅜	86
25	7.6	3	76	3 ¼	83	3 ½	89
>25	>7.6	3 + *h**	76 + *h**	3 ¼ + *h**	83 + *h**	3 ½ + *h**	89 + *h**

*For each foot of horizontal viewing distance greater than 25 ft (7.6 m), add ⅛ in. (3 mm) to the character or symbol height.

18.9.4.9 Stroke thickness of the uppercase letter "I" shall be minimum 10 percent and maximum 30 percent of the height of the character.

18.9.4.10 Character spacing shall be measured between the two closest points of adjacent characters, excluding word spaces. Spacing between individual characters shall be minimum 10 percent and maximum 35 percent of character height.

18.9.4.11 Spacing between the baselines of separate lines of characters within a message shall be 135 percent minimum and 170 percent maximum of the character height.

18.10 Tactile Appliances.

A study funded by the National Institute on Deafness and Other Communication Disorders concluded that tactile signaling was shown to be more effective than visual appliances for awakening hearing-impaired and deaf persons (Ashley, 2005). However, the use of tactile appliances does not eliminate the need for visual appliances. A tactile appliance is a personal appliance requiring direct contact with the user. A flashing light covers a volume of space.

18.10.1 Application. Tactile appliances shall be permitted if used in addition to audible and/or visual notification appliances.

18.10.2* Performance. Tactile appliances shall meet the performance requirements of ANSI/UL 1971, *Standard for Signaling Devices for the Hearing Impaired*, or equivalent.

While tactile signaling is a common method used in the deaf and hearing-loss community, additional research and performance specifications are needed before code language can be developed. Many variables that might affect the reliability of tactile appliance performance have not been tested or documented. Some of the tactile appliance variables include the mass of the appliance, frequency of vibration, and the throw or displacement of the vibrating mass as well as any pattern to the vibration. Occupant variables that might affect the reporting of test results and the effectiveness of the appliance include the person's age, whether a person has profound hearing loss versus partial hearing loss, how long a person has lived with hearing loss, and what sleep stage the person is experiencing when the appliance operates. The type of mattress might also have an effect on the performance of certain tactile appliances. Until additional research is done, performance requirements for the manufacture, listing, installation, and use of tactile appliances cannot be specified with a sufficient degree of confidence.

A.18.10.2 Notification appliances are available for the deaf and hard of hearing. These appliances include, but are not limited to, supplemental tactical notification appliances. Such tactile notification appliances can be capable of awakening people. Tactile appliances can initiate in response to the activation of an audible smoke alarm, through hard wiring into the fire alarm system or by wireless methods.

Some tests show that visual notification appliances might not be effective in awakening some sleeping individuals during an emergency. Some tactile devices can be more effective in awakening individuals, regardless of hearing levels, from sleep.

18.11* Standard Emergency Service Interface.

Where required by the enforcing authority; governing laws, codes, or standards; or other parts of this Code, annunciators, information display systems, and controls for portions of a system provided for use by emergency service personnel shall be designed, arranged, and located in accordance with the requirements of the organizations intended to use the equipment.

A.18.11 *Standard Emergency Service Interface.* Annunciators, information display systems, and controls for portions of a system provided for use by emergency service personnel should be designed, arranged, and located in accordance with the needs of the organizations intended to use the equipment.

Where annunciators, information display systems, and controls for portions of the system are provided for use by emergency service personnel, these should have a common design and operation to avoid confusion of users.

FAQ

What is the purpose of the standard emergency service interface?

The requirement for a standard emergency service interface is to help serve the needs of the fire service and other emergency service personnel. The ability of emergency service personnel to understand and use the information can play a key role in incident command and resource allocation. The standard emergency service interface provides information consistently for all systems. Currently there is no accepted industry standard interface; however, the Code permits a local jurisdiction to develop and enforce its own standard.

References Cited in Commentary

ADA-ABA-AG, Americans with Disabilities Act and Architectural Barriers Act Accessibility Guidelines, published in the *Federal Register,* U.S. Government Publishing Office, Washington, DC, 2010.

Americans with Disabilities Act Accessibility Guidelines (ADAAG), published in the *Federal Register,* U.S. Government Publishing Office, Washington, DC, July 23, 2004 and amended August 5, 2005.

ANSI/ASA S3.41, *American National Standard Audible Emergency Evacuation (E2) and Evacuation Signals with Relocation Instructions (ESRI)*, American National Standards Institute, Inc., New York, NY, 1990, reaffirmed 2015.

ANSI/UL 864, *Standard for Control Units and Accessories for Fire Alarm Systems*, Underwriters Laboratories Inc., Northbrook, IL, 10th edition, 2014.

ANSI/UL 1971, *Standard for Signaling Devices for the Hearing Impaired*, Underwriters Laboratories Inc., Northbrook, IL, 3rd edition, 2002, revised 2013.

Ashley, E., Du Bois, J., Klassen, M., and Roby, R., "Waking Effectiveness of Audible, Visual and Vibratory Emergency Alarms Across All Hearing Levels," *Fire Safety Science — Proceedings of the Eighth International Symposium,* International Association for Fire Safety Science, 2005.

Direct Visual Signaling as a Means for Occupant Notification in Large Spaces, Fire Protection Research Foundation, Quincy, MA, January 2006.

Fire Protection Research Foundation, *Intelligibility of Fire Alarm and Emergency Communications Systems*, prepared by C. Grant, November 2008.

Hartmann, B., "How We Localize Sound," *Physics Today* 52, no. 11 (1999): 24.

ISO 7731, *Danger signals for public and work places — Auditory danger signals*, International Organization for Standardization, Geneva, Switzerland, 2003 (reconfirmed 2015).

NFPA 70®, National Electrical Code®, 2017 edition, National Fire Protection Association, Quincy, MA.

NFPA 72G, *Guide for the Installation, Maintenance, and Use of Notification Appliances for Protective Signaling Systems*, 1985 edition, National Fire Protection Association, Quincy, MA.

NFPA 720, *Standard for the Installation of Carbon Monoxide (CO) Detection and Warning Equipment* (withdrawn), National Fire Protection Association, Quincy, MA.

NFPA *101®, Life Safety Code®*, 2018 edition, National Fire Protection Association, Quincy, MA.

Optimizing Fire Alarm Notification for High Risk Groups, Summary Report, Fire Protection Research Foundation, Quincy, MA, June 2007.

SFPE Handbook of Fire Protection Engineering, 5th edition, National Fire Protection Association, Quincy, MA, and Society of Fire Protection Engineers, Bethesda, MD, 2016, pp. 1359 – 1374.

Waking Effectiveness of Alarms for Adults Who Are Hard of Hearing, Fire Protection Research Foundation, Quincy, MA, June 2007.

Waking Effectiveness of Alarms for the Alcohol Impaired, Fire Protection Research Foundation, Quincy, MA, June 2007.

Additional Reading

Butler, B., et al., *Locating Fire Alarm Sounders for Audibility*, Building Services Research and Information Association, Berkshire, UK, 1981.

IEC 60268-16, *Sound system equipment — Part 16: Objective rating of speech intelligibility by speech transmission index*, International Electrotechnical Commission, Geneva, Switzerland, 2011.

IEC 60849, *Sound Systems for Emergency Purposes*, 1998 edition, International Electrotechnical Commission, Geneva, Switzerland.

ISO 7240-19, *Fire Detection and Alarm Systems — Part 19: Design, Installation, Commissioning and Service of Sound Systems for Emergency Purposes*, 1st edition, International Organization for Standardization, Geneva, Switzerland, 15 Aug 2007.

Jacob, K., "Understanding Speech Intelligibility and the Fire Alarm Code," Bose™ Professional Systems, 2001. Available at *www.rpsa-fire.com*.

Myles, M., *Analysis of Acoustic Signals Produced by Residential Fire Alarms*, National Fire Protection Association, Quincy, MA, 1979 Annual Meeting.

NEMA Standards Publication SB 50-2008, "Emergency Communications Audio Intelligibility Applications Guide," National Electrical Manufacturers Association, Rosslyn, VA, 2008.

Schifiliti, R. P., "Audibility and Audible Signaling, Selected Bibliography," March 2001. Available at *www.rpsa-fire.com*.

Schifiliti, R. P., "Can You Hear (and Understand) Me Now? Ten Key Issues Affecting the Intelligibility of Voice Communications," *NFPA Fire Journal*, November/December 2010, National Fire Protection Association, Quincy, MA.

Schifiliti, R. P., "Designing Fire Alarm Audibility," *Fire Technology*, May 1988.

Schifiliti, R. P., "Intelligibility — Selected Bibliography," November 2010. Available at *www.rpsa-fire.com*.

Schifiliti, R. P., "Mass Notification Systems," NEMA Supplement in *Fire Protection Engineering*, Society of Fire Protection Engineers, Bethesda, MD, Fall 2005.

Schifiliti, R. P., "The Mosquito and the Picket Fence — A Modern Day Fire Alarm Fable About Broad-band versus Narrow-band Signaling," NEMA Supplement (three parts) in *Fire Protection Engineering*, Society of Fire Protection Engineers, Bethesda, MD, Winter, Spring, and Summer 2005.

Schifiliti, R. P., "Visual Signaling as a Means for Occupant Notification in Large Spaces," Fire Protection Research Foundation, Quincy, MA, January 2006.

Schifiliti, R. P., "Voice Intelligibility for Emergency Voice/Alarm Communications Systems," National Fire Protection Association, 2018.

Reserved Chapters

In the 2019 edition of *NFPA 72®, National Fire Alarm and Signaling Code®*, the following chapters are reserved for future use:

- Chapter 19
- Chapter 20

Emergency Control Function Interfaces

CHAPTER

21

Chapter 21 outlines the requirements for emergency control functions and describes how they interface with fire alarm and signaling systems. Emergency control functions are the building's fire and emergency control elements or systems that are initiated by the fire alarm or signaling system, which then operate to either increase the level of safety for occupants or control the spread of the harmful effects of fire or other dangerous products. This chapter covers the following functions: initiation of Elevator Phase I Emergency Recall Operation; shutdown of elevator power; interface with fire service access elevators (FSAEs) and occupant evacuation elevators (OEEs); shutdown of HVAC systems; release of magnetically held-open doors, shutters, and electrically locked doors; and interface with exit marking audible notification systems.

The following list is a summary of significant changes to Chapter 21 for the 2019 edition:

- Revised language throughout for consistency with ANSI/ASME A17.1/CSA B44, *Safety Code for Elevators and Escalators.*
- Revised 21.2.4 to relax the distance between emergency control function interfaces and the fire alarm interface point when the emergency control function interface circuit is Class D (fail-safe).
- Revised 21.3.7 to require that fire alarm devices at the top of elevator hoistways be accessible from outside the elevator hoistway.
- Greatly expanded the commentary in Section 21.5 providing a greater overview of elevator operation.
- Greatly expanded and clarified the requirements of Section 21.6, Occupant Evacuation Elevators (OEE).
- High Volume Low Speed (HVLS) fans added to Section 21.8.

21.1* Application.

The provisions of Chapter 21 shall cover the minimum requirements and methods for emergency control function interfaces to fire alarm systems and emergency communications systems in accordance with this chapter.

The control of protected premises emergency control (fire safety) functions is initiated automatically by the fire alarm and signaling system in response to fire alarm and emergency communications systems (ECS) signals. Some emergency control functions can be initiated as a result of nonspecific system alarm signals, while other fire emergency control functions can be initiated only from a specific device or zone (e.g., fire or smoke door release or fan shut down only on the floor of fire origin).

A.21.1 Fire alarm systems, signaling systems, and emergency communications systems are often part of a large, integrated system serving a building or area. Figure A.21.1 shows examples of individual systems that might be part of an integrated system.

A fire alarm system might monitor the status of one of the other individual systems or provide a form of output to control another individual system, such as a smoke control system or an elevator controller.

In some cases, the fire alarm system shares information and control in two directions with another individual system. *NFPA 72* covers only the fire alarm or signaling system in the circuits powered by it, not any part of the other individual systems.

See NFPA 3 and NFPA 4 for additional information on integrated systems.

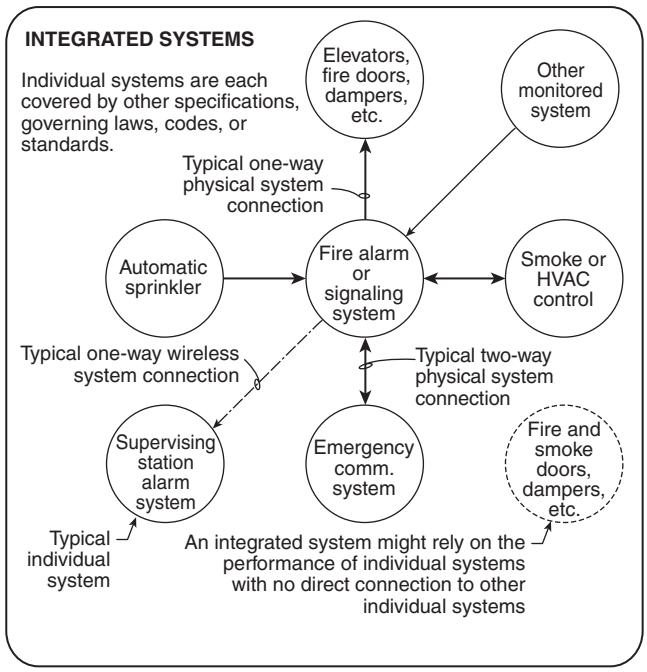

Δ ***FIGURE A.21.1*** *Integrated Systems. (Courtesy of R. P. Schifiliti Associates, Inc.)*

21.1.1 The requirements of Chapters 7, 10, 14, 17, 18, 23, 24, and 26 shall apply, unless otherwise noted in this chapter.

21.1.2 The requirements of this chapter shall not apply to Chapter 29 unless otherwise stated.

21.2 General.

21.2.1* Emergency control functions shall be permitted to be performed automatically.

A.21.2.1 The performance of automatic emergency control functions refers to their normal operation. For instance, it is all right to shut down elevator mainline power when the system has been designed to do so.

21.2.2 The performance of automatic emergency control functions shall not interfere with power for lighting or for operating elevators.

21.2.3 The performance of automatic emergency control functions shall not preclude the combination of fire alarm services with other services requiring monitoring of operations.

21.2.4* Emergency control function interface devices shall be located within 3 ft (0.9 m) of the component controlling the emergency control function where the control circuit is not configured as a Class D circuit.

Exhibit 21.1 depicts a relay or an addressable control module (i.e., an emergency control function interface device installed within 3 ft (0.9 m) of a controller) performing an emergency control function, such as providing the input to the elevator controller to initiate Elevator Phase I Emergency Recall Operation.

A.21.2.4 Emergency control function interface devices can be located far from the device to be actuated, such as air-handling units and exhaust fans located on the roof. The requirement for monitoring installation wiring for integrity only applies to the wiring between the fire alarm control unit and the emergency control function interface device. For example, it does not apply to the wiring between the emergency control function interface device and a motor stop/start control relay, or between the emergency control function interface device and the equipment to be controlled (e.g., air-handling units and exhaust fans). The location of the emergency control function interface device within 3 ft (910 mm) applies to the point of interface and not to remotely located equipment.

Where Class D circuits are utilized to actuate emergency control functions (such as but not limited to door closers, AHU shutdown, and damper controls), the fire alarm control point is not required to be within 3 ft (910 mm) of the interface point to the system or device to be controlled. It is important to note that in some cases these control circuits are not part of the fire alarm system but rather part of the other systems performing the functions. See Figure A.3.3.146.1.1 for additional details.

The unique characteristic of Class D circuits that allows relaxation of the 3 ft (0.9 m) distance requirement is that they are fail-safe. Since Class D circuits are fail-safe, failure of this unsupervised portion of circuit does not decrease fire protection or life safety of the system. Also, some of the devices controlled by Class D circuits will be "supervised" by building occupants so that their failure is reported to building maintenance staff (e.g., door holders).

EXHIBIT 21.1

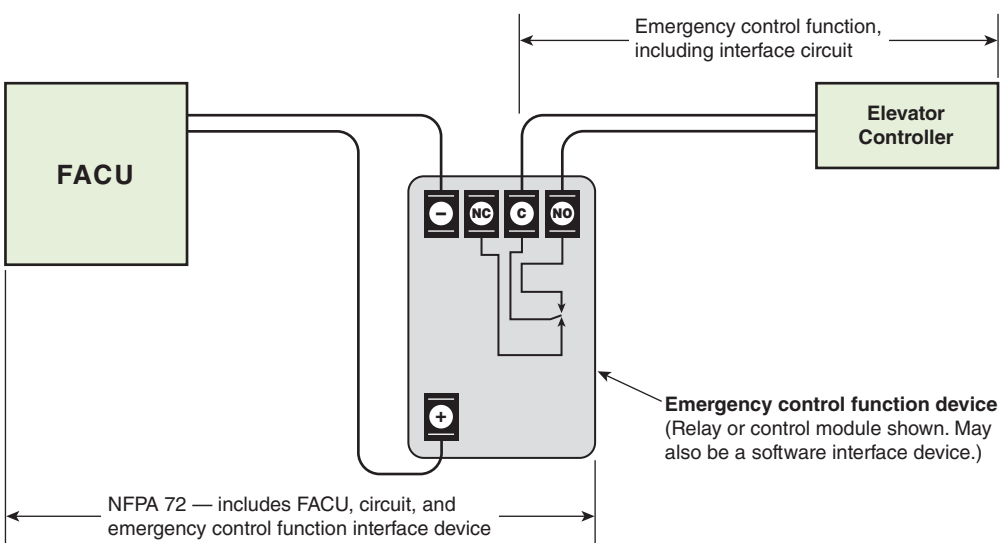

Emergency Control Function Interface Device Installed Within 3 ft (0.9 m) of an Elevator Controller. (Source: R. P. Schifiliti Associates, Inc., Reading, MA)

FAQ

Where must the fire alarm and signaling system emergency control function interface device be located?

An emergency control function may involve turning on a fan through the operation of a motor controller located remotely from the fan. This action is accomplished through the operation of an emergency control function interface device such as a listed relay connected as an output from the fire alarm and signaling system. The distance between the emergency control function interface device and the fan motor controller cannot exceed 3 ft (0.9 m), in accordance with 21.2.4. Positioning the emergency control function interface device within 3 ft (0.9 m) of the fan is unnecessary. However, as the distance between the fan motor controller and the fan increases, so does the potential for interruption of power to the fan.

21.2.5 The emergency control function interface device shall function within the voltage and current limitations of the fire alarm control unit.

The emergency control function interface device is often an auxiliary relay. These relays must not be off-the-shelf items from an electronics supply store — they must be listed specifically to operate with the fire alarm control unit.

21.2.6 The installation wiring between the fire alarm control unit and the emergency control function interface device shall be Class A, Class B, Class D, Class N, or Class X in accordance with Chapter 12.

This subsection specifies the permitted pathway class designations that can be used for these circuits. Each of the permitted class designations, except Class D, includes a requirement to annunciate conditions that are adverse to the operation of the circuit or pathway.

The methods that Class N pathways use to annunciate conditions that are adverse to the operation of the circuit or pathway are identified in 12.3.6. Refer to 23.4.3 for requirements related to the designation of pathways for fire alarm and signaling system applications. Pathway class designations and their intended performance requirements are in Section 12.3.

21.2.7 Emergency control functions shall not interfere with other operations of the fire alarm system.

This requirement is similar to the requirements for combination systems. One way to ensure that the emergency control functions do not interfere with other operations of the fire alarm and signaling system is to use auxiliary relays listed for use with the fire alarm control unit to isolate the emergency control function from the control unit.

21.2.8 The method(s) of interconnection between the fire alarm system and emergency control function interface device shall be monitored for integrity in accordance with Section 12.6.

21.2.9 The method(s) of interconnection between the emergency control function interface device and the component controlling the emergency control function shall comply with the applicable provisions of *NFPA 70*.

21.2.10 The method(s) of interconnection between the emergency control function interface device and the component controlling the emergency control function shall be achieved by one of the following recognized means:

(1) Electrical contacts listed for the connected load
(2) Data communications over a signaling line circuit(s) dedicated to the fire alarm or shared with other premises operating systems
(3) Other listed methods

21.2.11 If a fire alarm system is a component of a life safety network and it communicates data to other systems providing life safety functions, or it receives data from such systems, the following shall apply:

(1) The path used for communicating data shall be monitored for integrity. This shall include monitoring the physical communications media and the ability to maintain intelligible communications.
(2) Data received from the network shall not affect the operation of the fire alarm system in any way other than to display the status of life safety network components.
(3) Where non-fire alarm systems are interconnected to the fire alarm system using a network or other digital communications technique, a signal (e.g., heartbeat, poll, ping, query) shall be generated between the fire alarm system and the non-fire alarm system. Failure of the fire alarm system to receive confirmation of the transmission shall cause a trouble signal to indicate within 200 seconds.

The term *life safety network* is defined in 3.3.150 as "a type of combination system that transmits fire and emergency communications system data to at least one other life safety system." Subsection 21.2.11 applies where data are communicated between the fire alarm and emergency communications system and other systems providing life safety functions. This communications path requires a level of monitoring for integrity consistent with that required for other fire alarm circuits.

21.3* Elevator Phase I Emergency Recall Operation.

Before the 2016 edition of the Code, Elevator Phase I Emergency Recall Operation was called Elevator Recall for Fire Fighters' Service. Elevator Phase I Emergency Recall Operation involves removing elevators from normal service by having them automatically travel to a predetermined level on activation of specific smoke detectors (or other automatic fire alarm initiating devices, as permitted by 21.3.10). This feature is a requirement of ANSI/ASME A17.1/CSA B44 and provides a means of moving elevator cars to a safe location for passengers to exit and for subsequent use by fire fighters. Some of the signals used for Elevator Phase I Emergency Recall Operation are also used to provide appropriate warnings to emergency personnel concerning the use of the elevators after they have been recalled.

A.21.3 The terms *machinery space*, *control space*, *machine room*, and *control room* are defined in *NFPA 70* and ANSI/ASME A17.1/CSA B44.

21.3.1 All fire alarm initiating devices used to initiate elevator Phase I Emergency Recall Operation shall be connected to the required building fire alarm system.

FAQ

Which code requires the installation of fire alarm initiating devices for Elevator Phase I Emergency Recall Operation?

The requirements in Section 21.3 apply to the Elevator Phase I Emergency Recall Operation functions of the fire alarm and signaling system. The requirement to install fire alarm initiating devices for Elevator Phase I Emergency Recall Operation comes from ANSI/ASME A17.1/CSA B44. All fire alarm initiating devices associated with Elevator Phase I Emergency Recall Operation must be connected to the building

fire alarm and signaling system or, where there is no building fire alarm and signaling system, to a dedicated function fire alarm control unit in accordance with 21.3.2.

ANSI/ASME A17.1/CSA B44 requires a fire alarm initiating device at each floor served by the elevator; in the associated elevator machine room, machinery space containing a motor controller or driving machine, control space, or control room; and in the elevator hoistway if sprinklers are in the hoistway. The terms *machinery space*, *control space,* and *control room* are associated with elevators that use machine-room-less elevator designs. These machine-room-less designs have various configurations of elevator controller and equipment locations. These terms are defined and illustrated in ANSI/ASME A17.1/CSA B44. When machine-room-less elevators are used, the elevator code requires a fire alarm initiating device to be installed at these locations. The following is an excerpt from ANSI/ASME A17.1/CSA B44 showing the related elevator recall requirements.

ANSI/ASME A17.1/CSA B44 (2016)

2.27.3.2 Phase I Emergency Recall Operation Alarm Initiating Devices.

2.27.3.2.1 In jurisdictions not enforcing the NBCC, smoke detectors or other automatic fire detectors in environments not suitable for smoke detectors (fire alarm initiating devices) used to initiate Phase I Emergency Recall Operation shall be installed in conformance with the requirements of *NFPA 72* and shall be located

(a) at each elevator lobby served by the elevator
(b) in the associated elevator machine room, machinery space containing a motor controller or driving machine, control space, or control room
(c) in the elevator hoistway, when sprinklers are located in those hoistways

NOTE [2.27.3.2.1(b)]: A machinery space containing a motor controller or driving machine located in the elevator hoistway, or a control space located in the elevator hoistway requires a fire alarm initiating device regardless of the presence of sprinklers.

2.27.3.2.2 In jurisdictions enforcing the NBCC, smoke detectors, or heat detectors in environments not suitable for smoke detectors (fire alarm initiating devices), used to initiate Phase I Emergency Recall Operation, shall be installed in conformance with the requirements of the NBCC, and shall be located

(a) at each elevator lobby served by the elevator
(b) in the associated elevator machine room, machinery space containing a motor controller or driving machine, control space, or control room
(c) in the elevator hoistway, when sprinklers are located in those hoistways

NOTES:

(1) 2.27.3.2.2: Smoke and heat detectors (fire alarm initiating devices) are referred to as fire detectors in the NBCC. Pull stations are not deemed to be fire detectors.
(2) 2.27.3.2.2(b): A machinery space containing a motor controller or driving machine located in the elevator hoistway, or a control space located in the elevator hoistway requires a fire alarm initiating device regardless of the presence of sprinklers.

2.27.3.2.3 Phase I Emergency Recall Operation to the designated level shall conform to the following:

(a) The activation of a fire alarm initiating device specified in 2.27.3.2.1(a) or 2.27.3.2.2(a) at any floor, other than at the designated level, shall cause all elevators that serve that floor, and any associated elevator of a group automatic operation, to be returned nonstop to the designated level.
(b) The activation of a fire alarm initiating device specified in 2.27.3.2.1(b) or 2.27.3.2.2(b) shall cause all elevators having any equipment located in that room or space, and any associated elevators of a group automatic operation, to be returned nonstop to the designated level. If the machine room is located at the designated level, the elevator(s) shall be returned nonstop to the alternate level.

ANSI/ASME A17.1/CSA B44 (2016) *(Continued)*

(c) In jurisdictions not enforcing NBCC, the activation of a fire alarm initiating device specified in 2.27.3.2.1(c) shall cause all elevators having any equipment in that hoistway, and any associated elevators of a group automatic operation, to be returned nonstop to the designated level, except that initiating device(s) installed at or below the lowest landing of recall shall cause the car to be sent to the upper recall level.

(d) In jurisdictions enforcing the NBCC, the initiation of a fire detector in the hoistway shall cause all elevators having any equipment in that hoistway, and any associated elevators of a group automatic operation, to be returned nonstop to the designated level, except that initiating device(s) installed at or below the lowest landing of recall shall cause the car to be sent to the upper recall level.

(e) The Phase I Emergency Recall Operation to the designated level shall conform to 2.27.3.1.6(a) through (n).

2.27.3.2.4 Phase I Emergency Recall Operation to an alternate level (see Section 1.3) shall conform to the following:

(a) the activation of a fire alarm initiating device specified in 2.27.3.2.1(a) or 2.27.3.2.2(a) that is located at the designated level, shall cause all elevators serving that level to be recalled to an alternate level, unless Phase I Emergency Recall Operation is in effect

(b) the requirements of 2.27.3.1.6(f), (j), (m), and (n)

(c) the requirements of 2.27.3.1.6(a), (b), (d), (e), (g), (h), (i), (k), and (l), except that all references to the "designated level" shall be replaced with "alternate level"

2.27.3.2.5 The recall level shall be determined by the first activated fire alarm initiating device for that group (see 2.27.3.2.1 or 2.27.3.2.2).

If the car(s) is recalled to the designated level by the "FIRE RECALL" switch(es) [see also 2.27.3.1.6(j)], the recall level shall remain the designated level.

2.27.3.2.6 When Phase I Emergency Recall Operation is initiated by a fire alarm initiating device for any of the following locations, as required by 2.27.3.2.3 or 2.27.3.2.4 the visual signal [see 2.27.3.1.6(h) and Fig. 2.27.3.1.6(h)] shall illuminate intermittently only in a car(s) with equipment in that location:

(a) machine room

(b) machinery space containing a motor controller or driving machine

(c) control room

(d) control space

(e) hoistway

Reprinted from ASME A17.1-2016, by permission of The American Society of Mechanical Engineers. All rights reserved.

Subsection 21.3.1 uses the term *fire alarm initiating devices*. The type of fire alarm initiating device for elevator recall is a system-type smoke detector, unless ambient conditions dictate the need for another type of automatic fire detection in accordance with 21.3.10. Refer to the commentary following 21.3.3.1 and 21.3.3.2 for additional discussion.

Some of the requirements in 2.27.3.2 of ANSI/ASME A.17.1/CSA B44 use the phrase "in jurisdictions not enforcing the NBCC." The *NBCC* is the *National Building Code of Canada*. There are some differences how the *NBCC* approaches the actuation of elevator recall by fire alarm initiating devices. Users of the *NBCC* should consult both the *NBCC* and ANSI/ASME A.17.1/CSA B44 rather than *NFPA 72* for fire alarm and signaling systems installation and interface requirements.

System Design Tip

Some jurisdictions in the United States amend the requirements in ANSI/ASME A.17.1/CSA B44. System designers should consult with their local authority having jurisdiction to determine if any amendments exist and refer to the specific details of these amendments as a part of the design process.

21.3.2* In facilities without a required building fire alarm system, fire alarm initiating devices used to initiate elevator Phase I Emergency Recall Operation shall be connected to either a nonrequired building fire alarm system or a dedicated function fire alarm control unit that shall be designated as "elevator recall control and supervisory control unit," permanently identified on the dedicated function fire alarm control unit and on the record drawings.

A.21.3.2 In facilities without a building alarm system, dedicated function fire alarm control units are required by 21.3.2 for elevator recall in order that the elevator recall systems be monitored for integrity and have primary and secondary power meeting the requirements of this Code.

The fire alarm control unit used for this purpose should be located in an area that is normally occupied and should have audible and visible indicators to annunciate supervisory (elevator recall) and trouble conditions; however, no form of general occupant notification or evacuation signal is required or intended by 21.3.2.

Where elevator recall is required in buildings that do not have and are not required to have a fire alarm and signaling system, a nonrequired building fire alarm system or a dedicated function fire alarm control unit designated and permanently labeled as the "Elevator Recall Control and Supervisory Control Unit" must be used. This serves the fire alarm initiating devices used for Elevator Phase I Emergency Recall Operation or elevator power shutdown and is intended solely to provide signals to the Elevator controller for elevator recall or shutdown. This does not trigger the need to install any additional alarm initiating devices other than those specifically required by *NFPA 72*.

The elevator recall control and supervisory control unit should be placed in an area that is constantly attended for monitoring, especially when it is installed as a stand-alone control.

21.3.3 Phase I Emergency Recall Operation Initiation.

N **21.3.3.1** Unless otherwise permitted by 21.3.3.2 or required by the authority having jurisdiction, only the elevator lobby, elevator hoistway, elevator machine room, elevator machinery space, elevator control room, and elevator control space smoke detectors or other automatic fire detection as permitted by 21.3.10 shall be used to initiate Elevator Phase I Emergency Recall Operation.

Unless otherwise required by the authority having jurisdiction, only the specified fire alarm initiating devices are permitted to initiate Elevator Phase I Emergency Recall Operation.

While the more traditional term *elevator machine room* is used, some elevators now being installed are machine-room-less elevators, and ANSI/ASME A.17.1/CSA B44 requires fire alarm initiating devices to be installed in the associated spaces for these types of elevators. Where elevator configurations include these spaces, smoke detectors or other automatic fire alarm initiating devices as permitted by 21.3.10 must be installed.

N **21.3.3.2** A waterflow switch shall be permitted to initiate Elevator Phase I Emergency Recall Operation upon activation of a sprinkler installed at the bottom of the elevator hoistway (the elevator pit), provided the waterflow switch and pit sprinkler are installed on a separately valved sprinkler line dedicated solely for protecting the elevator pit, and the waterflow switch is provided without time-delay capability.

Waterflow switches are permitted to initiate Elevator Phase I Emergency Recall Operation when sprinklers are in the elevator pit. (Refer to the commentary following A.21.3.8 for a discussion on when automatic sprinklers are needed in the elevator hoistway, including the elevator pit.) This does not apply to applications of sprinklers protecting the top of the elevator hoistway. In addition, where the conditions of installation require elevator shutdown because of sprinklers in the elevator pit, the use of a waterflow switch for elevator recall might not be advisable. Elevator shutdown is required to occur on or before activation of the sprinklers. The use of a waterflow switch for Elevator Phase I Emergency Recall Operation in that situation might have little effect because power could be removed from the elevator at the same time. Refer to the commentary following Section 21.4 and 21.4.1 for a discussion of the need for elevator shutdown and the intended sequence of operation.

21.3.4 Each fire alarm initiating device used to initiate elevator Phase I Emergency Recall Operation shall be capable of initiating the elevator recall function when all other devices on the same initiating device circuit have been manually or automatically placed in the alarm condition.

Some systems cannot ensure that the individual smoke detector or relay responsible for initiating Elevator Phase I Emergency Recall Operation will be able to actuate if other devices on the circuit have already actuated. This concern is prevalent with conventional (i.e., zoned or nonaddressable) fire alarm and signaling systems, specifically two-wire initiating device circuits where the power for the devices (i.e., smoke detector or relay responsible for initiating recall) is carried over the same pair of wires as the monitoring for initiation. For this reason, listing agencies often will permit only one conventional two-wire smoke detector with a relay base to be on an initiating device circuit. Also see Table 14.4.3.2, Item 17(7)(h) for testing.

Unless the smoke detectors are installed on individual initiating device circuits without any other fire alarm devices installed on those circuits, the smoke detectors should be powered separately from the initiating device circuit. This is usually not the case for smoke detectors installed on signaling line circuits, as they are addressable and circuit power is always available. Refer to the manufacturer's installation instructions.

21.3.5* Elevator Lobby Detector Location.

A.21.3.5 Smoke detectors should not be installed in outdoor locations or locations that are open to the weather (such as unenclosed elevator lobbies in open parking structures), because such environments can exceed the parameters of the detector listing and can result in unwanted alarms. *(See 21.3.10.)*

N **21.3.5.1** A lobby smoke detector shall be located on the ceiling within 21 ft (6.4 m) of the centerline of each elevator door within the elevator bank under control of the detector.

FAQ What is the basis of the 21 ft (6.4 m) requirement in 21.3.5.1?

In Chapter 17, the spacing requirements for smoke detectors require that for smooth ceilings all points on the ceiling have a smoke detector within a distance equal to or less than 0.7 times the nominal spacing of the detector. On smooth ceilings, 17.7.3.2.3.1 requires a nominal spacing of 30 ft (9.1 m) unless specific performance-based design criteria require different spacing. The value of 21 ft (6.4 m) specified in 21.3.5.1 correlates with this spacing (30 ft × 0.7 = 21 ft) and ensures that a smoke detector will be within 21 ft (6.4 m) of the centerline of the elevator door. High or non-smooth ceilings may require a different spacing.

A smoke detector is not required to be located immediately adjacent to Elevator doors. In addition, an individual smoke detector is not required for each elevator in a bank of elevators as long as a detector is within 21 ft (6.4 m) of the centerline of each door. See Exhibit 21.2 for an illustration of the 21 ft (6.4 m) requirement.

Paragraph 21.3.5.2 directs users to Chapter 17 for detector locations where ceiling configurations are other than level, smooth ceilings and where ceiling heights exceed 15 ft (4.6 m). Subsection 17.4.7 addresses situations such as elevator lobbies with high ceilings. It permits locating smoke detectors close to an object or a space if it is the intent that action be initiated when smoke or fire threatens that object or space [e.g., on the wall above and within 60 in. (1.52 m) from the top of the elevator door(s)]. Refer to A.17.4.7 for further explanation.

N **21.3.5.2** For lobby ceiling configurations exceeding 15 ft (4.6 m) in height or that are other than flat and smooth, detector locations shall be determined in accordance with Chapter 17.

Δ **21.3.6** Smoke detectors or other automatic fire detection as permitted in 21.3.10 shall not be installed in unsprinklered elevator hoistways unless they are required by ANSI/ASME A17.1/CSA B44, *Safety Code for Elevators and Escalators*, for actuation of the elevator hoistway smoke relief equipment and/or to initiate Elevator Phase I Emergency Recall Operation as specified in 21.3.14.1(2) and 21.3.14.2(2) for either of the following:

(1) Hoistway machinery spaces containing a motor controller or driving machine
(2) Control spaces located in the hoistway

This specifically prohibits the installation of smoke detectors in elevator hoistways unless the hoistway is protected by an automatic sprinkler system or unless the detector is required to activate hoistway smoke relief equipment or to initiate Elevator Phase I Emergency Recall Operation as required in 21.3.14.1(3) and 21.3.14.2(3). If sprinklers are installed in the hoistway, then the smoke detector (or other automatic fire alarm initiating device) is needed to provide the required recall feature. Refer to the commentary following A.21.3.8 for a discussion of when automatic sprinklers are needed in the elevator hoistway.

EXHIBIT 21.2

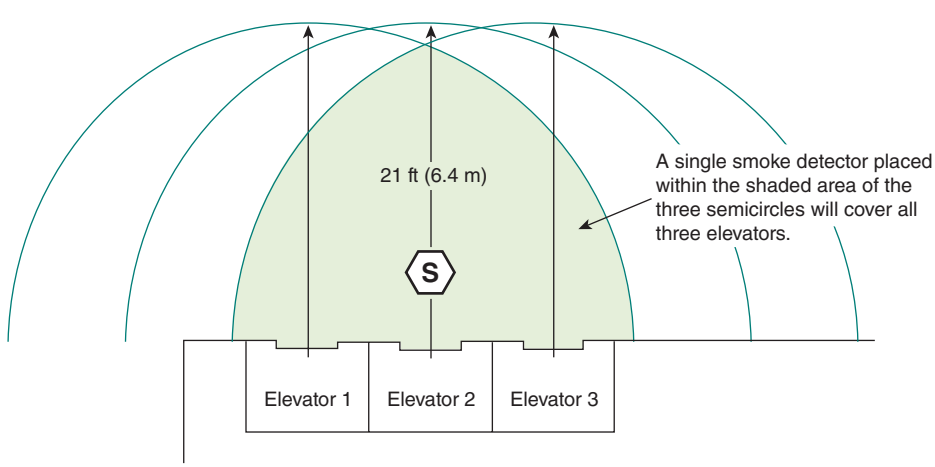

Smoke Detector Installed Within 21 ft (6.4 m) of Elevator Door.

N **21.3.7* Fire Alarm Initiating Device(s) Inside Elevator Hoistways.** Fire alarm initiating device(s) required to be installed inside an elevator hoistway by other sections of this Code or by other governing laws, codes, or standards shall be required to be accessible for service, testing, and maintenance from outside the elevator hoistway.

N **A.21.3.7** Since it is permitted by ANSI/ASME A.17.1/CSA B44, *Safety Code for Elevators and Escalators*, to have access for fire alarm initiating devices installed inside elevator hoistways, the following are examples for proposed methods for providing such access (other methods could be acceptable if approved by the authority having jurisdiction):

(1) Provide an access hatch door and associated protective guard for a spot type fire detector, where the fire detector is installed within the protective guard.
(2) Provide an air sampling-type detector as specified in 17.7.3.6 installed outside the hoistway with its sampling tube installed to sample the air within the hoistway.
(3) If heat detection is required, linear heat detectors with connection points located outside the hoistway or spot type heat detectors installed in accordance with A.21.3.7(1) are acceptable.

Historically, fire alarm service personnel needed to ride the elevator or lean into the open door of the hoistway to perform routine inspection, testing, and maintenance tasks. This new requirement for access from outside the elevator hoistway improves the safety of these inspection, testing, and maintenance tasks.

N **21.3.8*** When sprinklers are required in elevator hoistways by other codes and standards, fire alarm initiating devices shall be installed to initiate Elevator Phase I Emergency Recall Operation in accordance with ANSI/ASME A17.1/CSA B44, *Safety Code for Elevators and Escalators,* and the following shall apply:

(1) Where sprinklers are located at the top of the hoistway, the fire detection device(s) shall be located at the top of the hoistway.
(2) Where sprinklers are located at the bottom of the hoistway (the pit), fire detection device(s) shall be installed in the pit in accordance with Chapter 17.
(3) Outputs from the fire alarm system to the elevator system shall comply with 21.3.14.
(4) The fire alarm initiating device(s) shall be installed in accordance with Chapter 17.

A.21.3.8 This requirement applies to smoke and heat detectors installed in the hoistway. It is important to note that the hoistway includes the pit. The location of smoke or heat detectors will, most likely, require special consideration in order to provide the intended response of early detection of fire in the elevator pit. The location of these detectors will likely need to be below the lowest level of recall in order to provide an adequate response. Since there is no real ceiling at this location to allow installation using the spacing provisions of Chapter 17, the provisions of 17.7.3.1.3 and 17.4.7 should be considered, which allows detectors to be placed closer to the hazard in a position where the detector can intercept the smoke or heat. Also refer to A.21.3.14.2(3).

Subsection 21.3.8(2) addresses the location of fire alarm initiating devices when sprinklers are installed in the elevator pit. The need to have sprinklers installed in the elevator hoistway, including the elevator pit, is established by the requirements in 9.3.6 of NFPA 13, *Standard for the Installation of Sprinkler Systems*.

NFPA 13 (2019)

9.3.6 Elevator Hoistways and Machine Rooms.

9.3.6.1* Sidewall spray sprinklers shall be installed at the bottom of each elevator hoistway not more than 2 ft (600 mm) above the floor of the pit.

A.9.3.6.1 The sprinklers in the pit are intended to protect against fires caused by debris, which can accumulate over time. Ideally, the sprinklers should be located near the side of the pit below the elevator doors, where most debris accumulates. However, care should be taken that the sprinkler location does not interfere with the elevator toe guard, which extends below the face of the door opening.

9.3.6.2 The sprinkler required at the bottom of the elevator hoistway by 9.3.6.1 shall not be required for enclosed, noncombustible elevator shafts that do not contain combustible hydraulic fluids.

9.3.6.3 Automatic fire sprinklers shall not be required in elevator machine rooms, elevator machinery spaces, control spaces, or hoistways of traction elevators installed in accordance with the applicable provisions in NFPA *101,* or the applicable building code, where all of the following conditions are met:

(1) The elevator machine room, machinery space, control room, control space, or hoistway of traction elevator is dedicated to elevator equipment only.
(2) The elevator machine room, machine room, machinery space, control room, control space, or hoistway of traction elevators are protected by smoke detectors, or other automatic fire detection, installed in accordance with *NFPA 72.*
(3) The elevator machinery space, control room, control space, or hoistway of traction elevators is separated from the remainder of the building by walls and floor/ceiling or roof/ceiling assemblies having a fire resistance rating of not less than that specified by the applicable building code.
(4) No materials unrelated to elevator equipment are permitted to be stored in elevator machine rooms, machinery spaces, control rooms, control spaces, or hoistways of traction elevators.
(5) The elevator machinery is not of the hydraulic type.

9.3.6.4* Automatic sprinklers in elevator machine rooms or at the tops of hoistways shall be of ordinary- or intermediate-temperature rating.

A.9.3.6.4 ASME A17.1, *Safety Code for Elevators and Escalators,* requires the shutdown of power to the elevator upon or prior to the application of water in elevator machine rooms or hoistways. This shutdown can be accomplished by a detection system with sufficient sensitivity that operates prior to the activation of the sprinklers (see also *NFPA 72*). As an alternative, the system can be arranged using devices or sprinklers capable of effecting power shutdown immediately upon sprinkler activation, such as a waterflow switch without a time delay. This alternative arrangement is intended to interrupt power before significant sprinkler discharge.

9.3.6.5* Upright, pendent, or sidewall spray sprinklers shall be installed at the top of elevator hoistways.

A.9.3.6.5 Passenger elevator cars that have been constructed in accordance with ASME A17.1, *Safety Code for Elevators and Escalators,* Rule 204.2a (under A17.1a-1985 and later editions of the code) have limited combustibility. Materials exposed to the interior of the car and the hoistway, in their end-use composition, are limited to a flame spread index of 0 to 75 and a smoke-developed index of 0 to 450, when tested in accordance with ASTM E84, *Standard Test Method of Surface Burning Characteristics of Building Materials.*

9.3.6.6 The sprinkler required at the top of the elevator hoistway by 9.3.6.5 shall not be required where the hoistway for passenger elevators is noncombustible or limited-combustible and the car enclosure materials meet the requirements of ASME A17.1, *Safety Code for Elevators and Escalators.*

System Design Tip

The requirements of NFPA 13 prescribe two basic locations for sprinklers in the elevator hoistway: the bottom of the hoistway (the elevator pit) and the top of the hoistway (see 9.3.6.1 and 9.3.6.4 in NFPA 13, respectively). The related paragraphs in 9.3.6 of NFPA 13 include detailed conditions that affect whether sprinklers are required in these locations. The design professionals responsible for the sprinkler system installation should be consulted to determine the sprinklers that will be provided for a given application.

FAQ

Are automatic fire alarm initiating devices required to be installed in elevator pits?

If sprinklers are installed in the elevator hoistway, ANSI/ASME A.17.1/CSA B44 requires fire alarm initiating devices to be installed in the hoistway to initiate elevator recall. An important note is that the elevator "pit" is part of the hoistway. ANSI/ASME A.17.1/CSA B44 defines *hoistway* (shaft), elevator, dumbwaiter, or material lift as "an opening through a building or structure for the travel of elevators, dumbwaiters, or material lifts, extending from the pit floor to the roof or floor above." If sprinklers are in the elevator pit, automatic fire alarm initiating devices are required to initiate elevator recall and, in accordance with 21.3.8, are located in the elevator pit.

Fire protection professionals have been hesitant to install fire alarm initiating devices in elevator pits, citing that they are not required or the environment is unacceptable for detectors. Subsection 21.3.8 clarifies that automatic fire alarm initiating devices are required to initiate elevator recall when sprinklers are installed in the elevator pit, even if sprinklers are not located at the top of the hoistway. Paragraph 21.3.14.2(3) correlates with the requirements of ANSI/ASME A.17.1/CSA B44 and applies in cases where initiating devices are located below the lowest level of recall so that the elevator will be recalled up and away from the fire hazard in the pit. Paragraph 21.3.3.2 permits the use of a waterflow switch to meet this detection requirement. However, if elevator shutdown is also required, refer to the cautionary commentary following 21.3.3.2.

System Design Tip

21.3.9* Smoke detectors shall not be installed in elevator hoistways to initiate Elevator Phase I Emergency Recall Operation unless listed for the environmental conditions.

The environment in elevator hoistways, and especially in elevator pits, is generally not suitable for the installation of most smoke detectors. However, some smoke detectors are designed and listed for installation in such environments and can be installed in those locations.

A.21.3.9 It should be noted that smoke detectors installed in hoistways can be a source of nuisance activation. Therefore, hoistways need smoke detectors specifically intended for those types of spaces (environments).

21.3.10* If ambient conditions prohibit installation of automatic smoke detection used to initiate elevator Phase I Emergency Recall Operation, other automatic fire detection initiating devices shall be permitted.

Some elevator lobbies, hoistways, and machine rooms are not suitable environments for the installation of spot-type smoke detectors. Dust, dirt, humidity, and temperature extremes may exceed the operating parameters of the smoke detector. A spot-type smoke detector installed in the elevator lobby of an unheated parking garage would likely experience problems due to vehicle exhaust, dust, dirt, humidity, and temperature extremes. Subsection 21.3.10 prevents nuisance alarms from smoke detectors installed in such areas and unnecessary initiation of Elevator Phase I Emergency Recall Operation. Another type of fire detector may be substituted for a smoke detector where the authority having jurisdiction or another code requires detection in an area with ambient conditions unsuitable for a smoke detector. Also refer to 21.3.9.

A.21.3.10 The objective of elevator Phase I Emergency Recall Operation is to have the elevator automatically return to the recall level before fire can affect the safe operation of the elevator. This includes both the safe mechanical operation of the elevator, as well as the delivery of passengers to a safe lobby location. Where ANSI/ASME A17.1/CSA B44, *Safety Code for Elevators and Escalators*, specifies the use of fire alarm initiating devices used to initiate Phase I Emergency Recall Operation, these devices are expected to provide the earliest response to situations that would require Phase I Emergency Recall Operations. The use of other automatic fire detection is only intended where smoke detection would not be appropriate due to the environment. Where ambient conditions prohibit the installation of smoke detectors, the selection and location of other automatic fire detection should be evaluated to ensure the best response is achieved. When heat detectors are used, consideration should be given to both detector temperature and time lag characteristics (Response Time Index). The consideration of a low temperature rating alone might not provide the earliest response. It should be noted that smoke detectors installed in hoistways can be a source of nuisance activation. Therefore, hoistways need smoke detectors specifically intended for those types of spaces (environments). Performance-based selection of specific automatic fire detection suitable for elevator hoistways can be based on Annex B as acceptable to the authority having jurisdiction.

21.3.11 When actuated, any fire alarm initiating device that is used to initiate elevator Phase I Emergency Recall Operation shall be annunciated at the building fire alarm control unit or at the fire alarm control unit described in 21.3.2.

21.3.12 Actuation of the elevator hoistway, elevator machine room, elevator machinery space, elevator control space, or elevator control room smoke detectors or other automatic fire detection as permitted by 21.3.10 shall cause separate and distinct visible annunciation at the building fire alarm control unit or at the fire alarm control unit described in 21.3.2.

An elevator hoistway smoke detector (if one is present) and the elevator machine room, elevator machinery space, elevator control space, or elevator control room smoke detector(s) must be connected to the building fire alarm control unit or the elevator recall control and supervisory control unit. Refer to the A.21.3.14.1 and the associated commentary regarding the elevator warning signal.

21.3.13 Where approved by the authority having jurisdiction, the detectors used to initiate Elevator Phase I Emergency Recall Operation shall be permitted to initiate a supervisory signal in lieu of an alarm signal.

This allowance is provided to minimize nuisance alarms from smoke detectors in these areas. This option should be used only where trained personnel are constantly in attendance and can immediately respond to the supervisory signal. A means should be provided to initiate the fire alarm signal if investigation of the supervisory signal indicates that building evacuation is necessary.

21.3.14 The following three separate outputs from the building fire alarm control unit or the fire alarm control unit described in 21.3.2 to the elevator system shall be provided to implement Elevator Phase I Emergency Recall Operation in accordance with Section 2.27 of ANSI/ASME A17.1/CSA B44, *Safety Code for Elevators and Escalators*, as required in 21.3.14.1 and 21.3.14.2:

(1) Designated level associated output
(2) Alternate level associated output
(3) Elevator machine room, elevator machinery space, elevator control space, or elevator control room associated output

Subsection 21.3.14 addresses requirements for fire alarm and signaling system outputs to the elevator controller(s) and correlates with the Elevator Phase I Emergency Recall Operation requirements of ANSI/ASME A17.1/CSA B44. This subsection is divided into three subparagraphs to address the three outputs involved: designated level recall, alternate level recall, and elevator warning signal.

The requirements in ANSI/ASME A17.1/CSA B44, Section 2.27, specify the conditions required to cause recall to the designated level or to the alternate level. The location of the initial fire alarm initiating device actuated determines which of the two recall levels will be used. Requirements for the elevator warning signal are also provided in Section 2.27. Refer to the commentary following 21.3.1 for an excerpt of the related ANSI/ASME A17.1/CSA B44 requirements.

FAQ How are the designated and alternate levels determined?

The building code or authority having jurisdiction assigns the floors that are to be used as the designated level and the alternate level. The designated level is usually, but not always, the lowest recall level.

Exhibit 21.3 shows a typical arrangement in which the designated level is the lowest recall level, the machine room is not located at the designated level, and the hoistway fire alarm initiating devices are not at or below the designated level. (Note: This exhibit shows the relationship of signals and should not be used as a wiring diagram.)

N **21.3.14.1* Elevator Phase I Emergency Recall Operation to Designated Level.** For each elevator or group of elevators operating in a group automatic operation, an output shall be provided from the fire alarm system to the elevator system in response to the following:

EXHIBIT 21.3

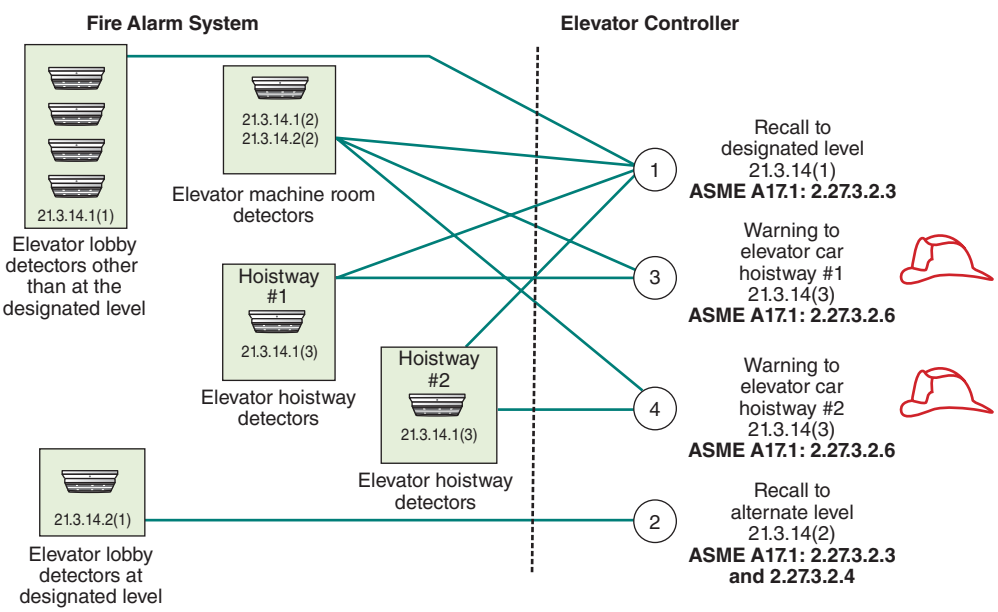

Note: NFPA 72, NFPA 13, and ASME A17.1 must be used jointly.

Detectors for Control of Elevator. (Source: Johnson Controls, Westminster, MA)

(1) Activation of smoke detector(s) or other automatic fire detection as permitted by 21.3.10 located at any associated elevator(s) lobby other than the lobby at the designated level
(2) Activation of smoke detector(s) or other automatic fire detection as permitted by 21.3.10 located at any associated elevator(s) machine room, elevator machinery space containing a motor controller or driving machine, elevator control space, or elevator control room, except where such rooms or spaces are located at the designated level
(3) Activation of smoke detector(s) or other automatic fire detection as permitted by 21.3.10 located at any associated elevator(s) hoistway when sprinklers are located in those hoistways, unless otherwise specified in 21.3.14.2(3)

The fire alarm and signaling system output for designated level recall is required when any of the conditions described in 21.3.14.1(1) through 21.3.14.1(3) occur. These conditions relate to ANSI/ASME A17.1/CSA B44, Section 2.27. Refer to the commentary following 21.3.1 for an excerpt of the related ANSI/ASME A17.1/CSA B44 requirements. Also, refer to Exhibit 21.3 for detectors used for elevator recall.

N **A.21.3.14.1** Refer to the definition of *Group Automatic Operation* in ANSI/ASME A.17.1/CSA B44, *Safety Code for Elevators and Escalators*.

In addition to performing elevator Phase I Emergency Recall Operation to the Designated Level, the elevator system, upon receiving the fire alarm system output specified in 21.3.14.1(1), 21.3.14.1(2), or 21.3.14.1(3), will also actuate the elevator car visual signal (fire fighter's hat) in accordance with ANSI/ASME A.17.1/CSA B44.

Each elevator car is equipped with a visual signal in the form of a fire fighter's fire hat. ANSI/ASME A17.1/CSA B44, Section 2.27.3.1.6(h) and Figure 2.27.3.1.6(h), shown in Exhibit 21.4(a), provide the requirements for the appearance of the fire fighter's fire hat symbol shown in Exhibit 21.4(b). Old Elevator cars or those that are in jurisdictions with other requirements might have a different symbol in the elevator car, such as a Maltese cross or a fire service symbol, shown respectively in Exhibit 21.4(c) and Exhibit 21.4(d). Although these symbols appear different from Exhibit 21.4(b), they should function in the same manner.

When recall is initiated by the elevator controller as a result of an actuated fire alarm initiating device located in the elevator machine room, machinery space, control space, control room, or hoistway, the fire hat illuminates intermittently (flashes) as a warning that conditions in these locations could inhibit elevator operation. Fire fighters are permitted to use their own judgment as to whether to continue to use the elevator based on the fire conditions. This function is often referred to as "flashing hat" in the fire protection industry. Most often, the fire alarm or signaling system provides a steady output to the elevator controller, and the elevator controller causes the visual signal to "illuminate intermittently" as required by ANSI/ASME A17.1/CSA B44, Section 2.27.

N **21.3.14.2* Elevator Phase I Emergency Recall Operation to Alternate Level.** For each elevator or group of elevators operating in a group automatic operation, an output shall be provided from the fire alarm system to the elevator system in response to the following:

(1) Activation of smoke detector(s), or other automatic fire detection as permitted by 21.3.10, located at the designated level lobby served by the elevator(s)
(2) Activation of smoke detector(s), or other automatic fire detection as permitted by 21.3.10, located in the elevator machine room, elevator machinery space containing a motor controller or driving machine, elevator control space, or elevator control room serving the elevator(s) if such rooms or spaces are located at the designated level
(3)* Activation of the fire alarm initiating device(s) identified in 21.3.14.1(3) if they are installed at or below the lowest level of recall in the elevator hoistway and the alternate level is located above the designated level

EXHIBIT 21.4

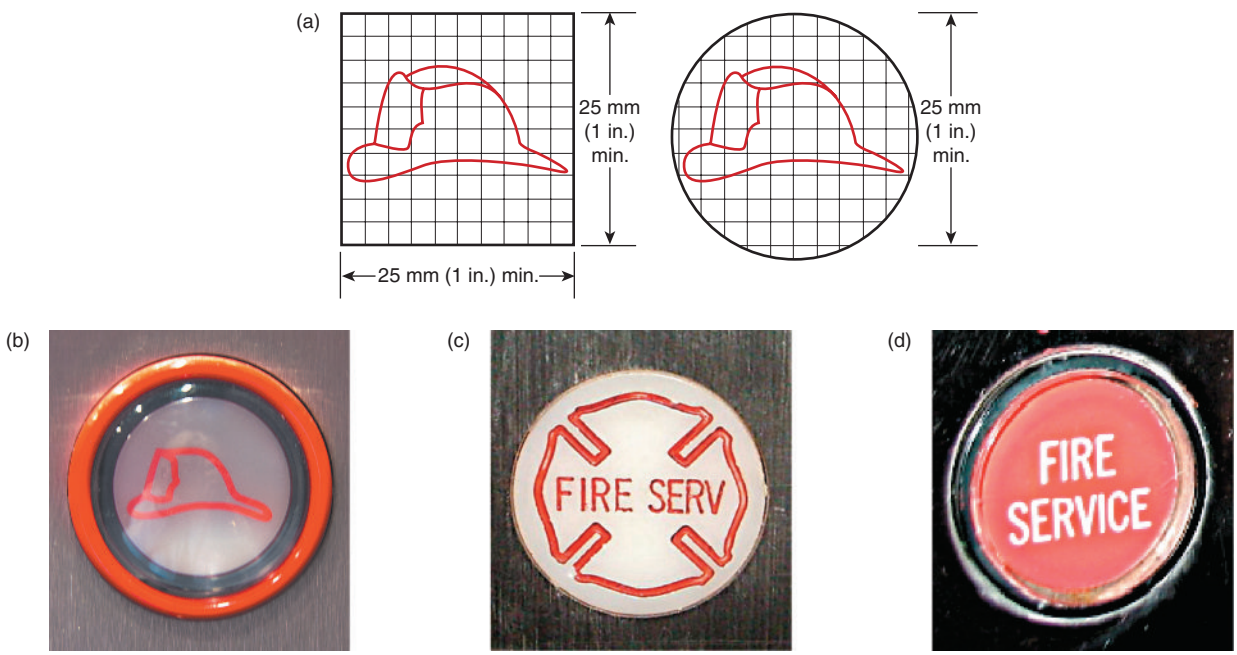

Visual Symbols. (a) Fire Fighter's Hat Symbol [Source: ANSI/ASME A17.1/CSA B44, Figure 2.27.3.1.6(h) Visual Signal], (b) Fire Fighter's Hat Symbol, (c) Maltese Cross Symbol, and (d) Fire Service Symbol.

The fire alarm and signaling system output for alternate level recall is required when any of the conditions described in 21.3.14.2(1) through 21.3.14.2(3) occur. The first two conditions are similar to those of 21.3.14.1(1) and 21.3.14.1(2), except that they apply where the locations are at the dedicated level. The condition in 21.3.14.2(3) is unique in that it applies where fire alarm initiating devices are installed in the elevator hoistway at or below the lowest level of recall and the alternate level of recall is located above the designated level. Paragraph A.21.3.14.2(3) provides further explanation concerning this condition. Also, refer to Exhibit 21.3 for detectors used for elevator recall.

With regard to 21.3.14.1(3), the installation in hoistways of smoke detectors or other automatic fire alarm initiating devices as permitted by 21.3.10 depends on whether sprinklers are located in the hoistways. The need to have sprinklers in a hoistway is determined by the requirements of NFPA 13. Refer to the commentary following A.21.3.8 and the excerpt from NFPA 13.

N **A.21.3.14.2** Refer to for the definition of *Group Automatic Operation* in ANSI/ASME A.17.1/CSA B44, *Safety Code for Elevators and Escalators*.

In addition to preforming elevator Phase I Emergency Recall Operation to the Alternate Level, the elevator system, upon receiving the fire alarm system output specified in 21.3.14.2(1), 21.3.14.2(2), or 21.3.14.2(3) will also actuate the elevator car visual signal (fire fighter's hat) in accordance with ANSI/ASME A17.1/CSA B44.

A.21.3.14.2(3) Where initiating devices are located in the elevator hoistway at or below the lowest level of recall, ANSI/ASME A17.1/CSA B44, *Safety Code for Elevators and Escalators*, requires that the elevator be sent to the upper recall level. Note that the lowest level of recall could be the designated level or alternate level as determined by the local authority for the particular installation. Also note that the elevator hoistway, as defined in ASME A17.1, includes the elevator pit.

21.4 Elevator Power Shutdown.

FAQ What is the purpose of elevator shutdown?

Power to the elevator must be disconnected automatically (elevator shutdown) on or before the application of water wherever a sprinkler system is installed in the elevator machine room, machinery space, control space, control room, or hoistway, as specified in the following excerpt from ANSI/ASME A17.1/CSA B44.

ANSI/ASME A17.1/CSA B44 (2016)

2.8.3.3 Sprinkler systems conforming to NFPA 13 or the NBCC, whichever is applicable (see Part 9), shall be permitted to be installed in the hoistway, machinery space, machine room, control space, or control room subject to 2.8.3.3.1 through 2.8.3.3.4.

2.8.3.3.1 All risers shall be located outside these spaces. Branch lines in the hoistway shall supply sprinklers at not more than one floor level. When the machinery space, machine room, control space, or control room is located above the roof of the building, risers and branch lines for these sprinklers shall be permitted to be located in the hoistway between the top floor and the machinery space, machine room, control space, or control room.

2.8.3.3.2 In jurisdictions not enforcing the NBCC, where elevator equipment is located or its enclosure is configured such that application of water from sprinklers could cause unsafe elevator operation, means shall be provided to automatically disconnect the main line power supply to the affected elevator and any other power supplies used to move the elevator upon or prior to the application of water.

(a) This means shall be independent of the elevator control and shall not be self-resetting.
(b) Heat detectors and sprinkler flow switches used to initiate main line elevator power shutdown shall comply with the requirements of *NFPA 72*.
(c) The activation of sprinklers outside of such locations shall not disconnect the main line elevator power supply. See also 2.27.3.3.6.

2.8.3.3.3 Smoke detectors shall not be used to activate sprinklers in these spaces or to disconnect the main line power supply.

2.8.3.3.4 In jurisdictions not enforcing the NBCC, when sprinklers are installed not more than 600 mm (24 in.) above the pit floor, 2.8.3.3.4(a) and (b) apply to elevator electrical equipment and wiring in the hoistway located less than 1200 mm (48 in.) above the pit floor, except earthquake protective devices conforming to 8.4.10.1.2(e); and on the exterior of the car at the point where the car platform sill and the lowest landing hoistway door sill are in vertical alignment.

(a) Elevator electrical equipment shall be weatherproof (Type 4 as specified in NEMA 250).
(b) Elevator wiring, except traveling cables, shall be identified for use in wet locations in accordance with the requirements in *NFPA 70*.

Reprinted from ASME A17.1-2016, by permission of The American Society of Mechanical Engineers. All rights reserved.

The primary purpose of elevator shutdown is to avoid the potential hazards of a wet elevator braking system. If the elevator brakes are wet and cannot hold, the elevator could move uncontrolled to the top or bottom of the hoistway, depending on the load in the car and the type of elevator control system. A secondary concern is that the application of water could short an electrical safety circuit or elevator control circuit, causing the elevator to operate erratically.

As shown in the 2.8.3.3.2 excerpt from ANSI/ASME A17.1/CSA B44, an automatic means is required to disconnect the main line power supply to the affected elevator in situations "where elevator equipment is located or its enclosure is configured such that application of water from sprinklers could cause unsafe elevator operation." The need to have sprinklers in the elevator machine room, machinery space, control space, control room, or hoistway comes from the requirements of NFPA 13. Refer to the commentary following A.21.3.8 for a discussion regarding the need for sprinklers in the elevator hoistway and for an excerpt of NFPA 13. The elevator pit is part of the hoistway — sprinklers may be required at the bottom of the hoistway (the elevator pit) even though they may not be required at the top of the hoistway.

If sprinklers are installed, especially in the hoistway, the fire protection system designer, the elevator equipment service company of record, and the authority having jurisdiction (e.g., the fire marshal, elevator inspector, building department) will need to be consulted to determine what sprinkler arrangements are at risk of unsafe elevator operation.

System Design Tip

Δ **21.4.1*** When heat detector(s) are used to actuate the disconnecting means described in 2.8 of ANSI/ASME A17.1/CSA B44, *Safety Code for Elevators and Escalators*, to disconnect the main line power supply to the affected elevator and any other power supplies used to move the elevator, upon or prior to the activation of sprinkler(s), the detector(s) shall have both a lower temperature rating and a lower response time index (RTI) as compared to the sprinkler(s).

While elevator shutdown is a separate function from Elevator Phase I Emergency Recall Operation, the implicit relationship between the two functions is important to understand. Ideally, elevator recall should be completed before elevator shutdown occurs. The expected sequence is that the fire alarm initiating device used to initiate Elevator Phase I Emergency Recall Operation, typically a smoke detector, would operate well in advance of the fire alarm initiating device used to initiate elevator shutdown, typically a heat detector or waterflow initiating device. The fire alarm initiating devices permitted for Elevator Phase I Emergency Recall Operation are outlined in 21.3.3. The fire alarm initiation devices permitted for elevator shutdown are not similarly prescribed. However, ANSI/ASME A17.1/CSA B44 prohibits the use of smoke detectors to initiate elevator shutdown.

In any case, the operation of the device must result in the expected sequence for recall and then shutdown (if needed), regardless of the device used. The requirement that elevator shutdown must occur at or before sprinkler activation adds another layer of complexity. When selecting equipment for these functions, the correct timing of events needs to be considered to the extent possible so that all three conditions — Elevator Phase I Emergency Recall Operation, elevator shutdown, and sprinkler activation — are met.

Subsections 21.4.1 and 21.4.2 for heat detector selection and placement ensure that shutdown occurs at or before sprinkler activation. Smoke detectors used to initiate Elevator Phase I Emergency Recall Operation are assumed to respond in advance of heat detector or sprinkler activation. When selecting and locating another device in place of a smoke detector for Elevator Phase I Emergency Recall Operation as permitted by 21.3.10, it is important to consider the intended sequence of operation. Also see A.21.3.10.

Even with careful design, equipment selection, and placement, the possibility exists that initiation of elevator power shutdown could occur before completion of Elevator Phase I Emergency Recall Operation. This could entrap elevator passengers.

• Δ **A.21.4.1** When determining desired performance, consideration should be given to the temperature and response time characteristics/index (RTI) of both the sprinkler and the heat detector to ensure that the heat detector will operate prior to the sprinkler, because a lower temperature rating alone might not provide earlier response.

Despite the obvious differences in temperature rating, a 135°F (57.2°C) heat detector may not respond before a 165°F (73°C) sprinkler head. The response time of a heat detector or sprinkler head is based on the response time index (RTI) of each device. The RTI must be known before the design and installation of heat detectors for elevator shutdown. See the commentary following A.17.6.1.5 for a discussion on RTI.

21.4.2* The heat detector(s) specified in 21.4.1 shall be placed within 24 in. (610 mm) of each sprinkler and be installed in accordance with the requirements of Chapter 17.

Δ **A.21.4.2** The purpose of spacing heat detectors in close proximity to each sprinkler is to ensure the operation of the disconnecting means upon heat detection prior to the operation of any sprinkler installed in those locations. Spot-type heat detectors or linear heat detectors are acceptable.

System Design Tip

Proper application of heat detectors used to initiate elevator power shutdown (shunt trip) in accordance with Section 21.4 rely on coordination between the fire alarm and sprinkler contractors. This becomes especially important with 21.3.7, which requires the fire alarm initiating devices to be accessible from outside the elevator hoistway. These requirements of *NFPA 72* may dictate sprinkler locations.

21.4.2.1 Engineering methods, such as those specified in Annex B, shall be permitted to be used to select and place heat detectors to ensure response prior to any sprinkler operation under a variety of fire growth rate scenarios.

Δ **21.4.3*** If pressure or waterflow switches are used to actuate the disconnecting means specified in 21.4.1, the use of devices with time-delay capability shall not be permitted.

Δ **A.21.4.3** Care should be taken to ensure that elevator power cannot be interrupted due to water pressure surges in the sprinkler system. The intent of the Code is to ensure that the switch and the system as a whole do not have the capability of introducing a time delay into the sequence. The use of a switch with a time delay mechanism set to zero does not meet the intent of the Code, because it is possible to introduce a time delay after the system has been accepted. This might occur in response to unwanted alarms caused by surges or water movement, rather than addressing the underlying cause of the surges or water movement (often due to air in the piping). Permanently disabling the delay in accordance with the manufacturer's printed instructions should be considered acceptable.

Δ **21.4.4*** Control circuit(s) of the disconnecting means specified in 21.4.1 shall be monitored for the presence of operating voltage.

A.21.4.4 Figure A.21.4.4 illustrates one method of monitoring elevator shunt trip control power for integrity.

N **21.4.5** Loss of voltage to the control circuit(s) in 21.4.4 shall cause a supervisory signal to be indicated at the building fire alarm control unit or at the control unit specified in or in 21.3.2.

Cases have occurred where the operating power for the elevator shunt trip circuit has been de-energized or was never connected to a power source. This situation prevents shutdown of the elevator when automatic sprinklers operate in the machine room or hoistway. Monitoring the integrity of the control power as required by 21.4.4 is similar to monitoring the integrity of the power for an electric motor–driven fire pump.

Δ **21.4.6** The devices specified in 21.4.2 and 21.4.3 shall be monitored for integrity by the fire alarm control unit specified in 21.3.1 or 21.3.2.

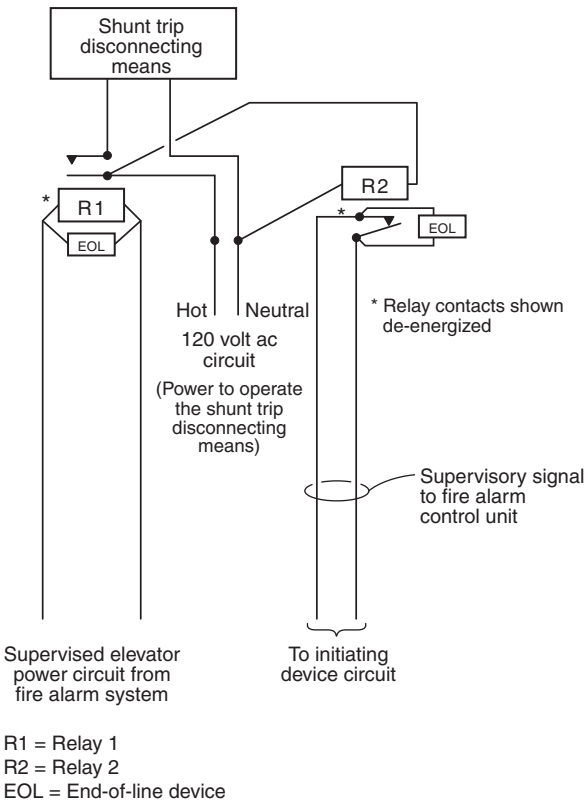

FIGURE A.21.4.4 *Typical Method of Providing Elevator Power Shunt Trip Supervisory Signal.*

This makes clear that fire alarm initiating devices used for elevator shutdown must be connected to a fire alarm and signaling system.

21.5* Fire Service Access Elevators.

Where one or more elevators are specifically designated and marked as fire service access elevators, temperature and presence of smoke in elevator lobbies, machine rooms, control rooms, machinery spaces, or control spaces shall be continuously monitored and displayed on a building fire alarm system annunciator(s), or other annunciator(s) as approved by the authority having jurisdiction.

Section 21.5 was rewritten to include and simplify the requirements that had been in 21.5.1 through 21.5.3.

In a typical building with more than one story or in a high rise with many stories, tenants, occupants, and visitors use elevators daily. In the elevator lobby, one pushes a call button, the elevator arrives and its doors open; entering the elevator one pushes the appropriate floor indicator button, which causes the doors to close and the elevator to begin its travel and ultimately arrive at the requested floor. Use in this manner becomes the norm and the expectation.

NFPA 72 addresses how elevator use changes in a fire emergency. Ordinarily, Elevator Phase I Emergency Recall Operation is in place as required by ANSI/ASME A17.1/CSA B44. A series of smoke detectors monitor specific areas related to elevators to ensure these areas remain tenable during a fire event. Smoke detectors monitor the elevator lobby on each floor of the building covered by the elevator, the elevator machine room controlling that elevator(s), and the elevator hoistway. There could be a number of elevators serving the same elevator lobby. This group of elevators would have common lobby detection and a common elevator machine room. If another automatic detector in the building not associated with elevator recall should activate, the elevators would continue to operate normally to move people from floor to floor in the building. An alarm from one of these other devices normally will cause a voice communication message to be delivered on various floors of the building advising persons not to use the elevators but to use the exit stairs.

At the point in the fire event when smoke is detected in an elevator lobby, elevator machine room controlling that elevator(s) or elevator hoistway, that elevator or group of elevators serving the same lobby will be "captured" and immediately be dispatched to the designated level. The designated level is established previously by the Fire Department as the most logical level where emergency responders will typically arrive in the emergency due to building use, access by emergency vehicles, etc. (See the FAQ following 21.3.14 to see how the designated and alternate levels are determined.) Captured elevators will immediately travel to the designated level and remain there with their doors open.

Arriving emergency responders can use a FEO-K1 key and override the captured elevator(s) and continue to use it (them) to shuttle fire fighters and equipment to fire-safe floors below the emergency level. Note that there are inherent risks associated with this use. The Fire Department will determine the point at which elevators need to be abandoned and cease to use them if the emergency continues to escalate.

FSAEs are being incorporated as part of many new building designs. *NFPA 5000®, Building Construction and Safety Code®*, requires that buildings with an occupied floor higher than 120 ft (36.6 m) above the lowest level of fire department vehicle access must have at least two FSAEs. There are many requirements for the design, installation, and marking of the FSAE system. These include the following:

- Minimum 3500 lb (1590 kg) capacity
- Serving every floor in the building
- FSAE lobby to have direct access to an exit stair enclosure
- Smoke barrier to have a minimum 1-hour fire resistance rating
- Lobby door assemblies to have not less than a 3/4-hour fire protection rating
- Each exit stair to have direct access to the FSAE lobby to have standpipe hose connection
- Elevator system monitoring
- Both normal power and Type 60/Class 2/Level 1 standby power
- 1-hour fire resistance rating for protection of wiring or cables
- No sprinklers whatever in the elevator machine rooms and machinery spaces
- FSAE symbol for identification and an approved method to prevent water from infiltrating the hoistway enclosure.

Because FSAEs require all these provisions, they are more robust than traditional elevator systems. The design enables the elevator system to be usable for a longer time than a traditional elevator in a fire emergency, and it enables greater fire fighter use for staging to fight the fire and enable increased assisted evacuation for persons who cannot easily self-evacuate. In some installations, FSAEs are in reserve and used exclusively for emergency responders.

NFPA *101®, Life Safety Code®*, requires special structures and high-rise buildings to be provided with an emergency command center (fire command center). Among other things, the emergency command

center is required to contain the voice fire alarm system panels and controls, fire department two-way telephone communication service panels and controls (where required), elevator floor location and operation annunciators, elevator fire recall switch in accordance with ANSI/ASME A17.1/CSA B44, and elevator emergency power selector switch(es) where provided in accordance with ANSI/ASME A17.1/CSA B44.

Status of all elevators must be provided, but this information is not required to be monitored or displayed by the fire alarm system.

N **A.21.5** The continuous monitoring of smoke and temperature is to allow the responding fire fighters to know when the tenability conditions at the floor elevator lobbies are changing. This can be accomplished at a minimum by monitoring elevator lobbies, machine rooms, control rooms, machinery spaces, or control spaces smoke detector(s) for the presence of smoke and a minimum of three ranges of temperature in the elevator lobbies, machine rooms, machinery spaces, or control rooms that provide full bodily access for fire fighters, as follows:

(1) Normal ≤90°F (32°C)
(2) Monitoring (supervisory) between 90°F (32°C) and 135°F (57°C)
(3) Unsafe (alarm) above 135°F (57°C)

Indications at the fire alarm control unit would typically be as follows:
For smoke:

(1) No indication for normal
(2) Red/alarm messaging or unsafe

For heat:

(1) Green (no indication on fire alarm control unit) for a normal range
(2) Amber/yellow/supervisory messaging for monitor range
(3) Red/alarm messaging for unsafe

Note 1: Temperature monitoring should not be required in areas or locations not accessible to fire fighters, such as elevator control spaces and elevator machinery spaces located inside the elevator hoistway.

Note 2: If fire service access elevators or occupant evacuation elevators are provided in buildings not provided with a fire command center, such as low-rise buildings, the required annunciator(s) should be installed in another approved location as determined by the authority having jurisdiction.

In most cases, a separate annunciator would be recommended to provide an overall status of the elevator lobbies, machine rooms, or control rooms that provide full bodily access for fire fighters in the building.

The lowest temperature defined in Table 17.6.2.1, Temperature Classification and Color Code for Heat-Sensing Fire Detectors, is 100°F (38°C), so a thermostat or other approved heat sensor(s) should be used to monitor temperatures less than 100°F (38°C).

21.6* Occupant Evacuation Elevators (OEE).

This section pertains to OEEs, which enter occupant evacuation operation (OEO) during a fire event. In buildings with traditional elevator systems, elevators typically recall with activation of an elevator lobby detector, machine room detector, or elevator hoistway detector. The activation of an automatic detector in the building in a typical high rise normally will cause a voice communication message to be delivered on various floors of the building advising persons not to use the elevators but to use the exit stairs.

Elevators designated as OEEs are more robust than traditional elevator systems. Most current building codes allow OEEs, but only when many conditions have been satisfied (e.g., refer to NFPA *101* Section 7.15.

OEO functions before Elevator Phase I Emergency Recall Operation. OEEs enable occupants to continue to use elevators during a fire event until Elevator Phase I Emergency Recall Operation occurs, which is activated by a smoke detector in an elevator lobby, in the elevator machine room controlling that elevator(s) or in the elevator hoistway. Where Elevator Phase I Emergency Recall Operation occurs, elevators are captured and dispatched to the designated level where they remain with their doors open.

For traditional and OEE systems, every elevator lobby/landing is provided with appropriate call button(s). A tenant, occupant, or visitor in an elevator lobby/landing will push an elevator call button. The elevator arrives, the doors open, the person steps into the elevator and depresses the floor button to which they wish to travel. The doors close and the elevator begins its travel and ultimately arrives at the requested floor.

For the traditional elevator system, if smoke is detected in an elevator lobby, elevator machine room controlling that elevator, or elevator hoistway, that elevator or group of elevators serving the same lobby/landing will be captured and be dispatched immediately to the designated level. An alarm from one of these devices normally will cause a voice communication message to be delivered on various floors of the building advising persons not to use the elevators but to use the exit stairs.

For OEEs, if smoke is detected in an elevator lobby, elevator machine room controlling that elevator, or elevator hoistway, that elevator or group of elevators in the same lobby will be captured and dispatched to the designated level.

If smoke is detected by activation of other automatic detectors in the building (detectors that do not initiate Elevator Phase I Emergency Recall Operation), elevator use continues but in OEO mode. OEO is a complicated combination of fire alarm and elevator system actions and interactions. Both systems work together in OEO mode to provide prioritized evacuation of occupants from the fire floor and surrounding floors. Due to the history of prohibiting elevator use during a fire event, the fire alarm and elevator systems are required to provide coordinated, clear, and frequent communication to building occupants with up-to-date and accurate information regarding whether they should evacuate and whether they should use the stairs or the elevators.

Section 21.6 prescribes the fire alarm system interface requirements with the elevator system and the information provided to the occupants concerning the availability of the elevator(s) during the course of the fire emergency. The interface requirements for such elevators are outlined in Section 2.27 of ANSI/ASME A17.1/CSA B44.

Section 7.15 of NFPA *101* outlines requirements "where passenger elevators for general public use are permitted to be used for occupant evacuation prior to Elevator Phase I Emergency Recall Operation." This section of NFPA *101* covers requirements for the following:

- Emergency action plan
- Signage
- Monitoring and display of conditions necessary for the safe operation of the elevator at the building emergency command center
- Status indicators in elevator lobbies
- Fire detection, alarm, and communications system
- Sprinkler system
- Construction/protection for the elevator cars, hoistways, machine rooms, and electrical power and control wiring

Additionally, there are specific requirements for elevator lobby size.

NFPA *101* does not permit sprinklers to be installed in elevator machine/control rooms or machinery/control spaces and at the top of elevator hoistways for OEEs. Sprinklers, if installed in the hoistway, are permitted to be installed only if they are located 24 in. (610 mm) or less above the pit floor. Additionally, shunt trip breakers are not permitted to be installed on OEEs. Annex material for Section 7.15 of NFPA *101* explains that the exclusion of a shunt trip breaker is not in violation of the power shutdown requirements of ANSI/ASME A17.1/CSA B44 because sprinklers are not permitted to be installed in elevator machine/control rooms, machinery/control space rooms, or at the top of elevator hoistways, and that sprinklers in the hoistway cannot be more than 24 in. (610 mm) above the pit floor. ANSI/ASME A17.1/CSA B44 does not include similar language prohibiting elevator power shutdown for OEO elevators.

The following excerpt from NFPA *101* specifies the fire detection, alarm, and communications requirements that apply when elevators for occupant-controlled evacuation are used.

NFPA *101* (2018)

7.15.4 Fire Detection, Alarm, and Communication.

7.15.4.1 The building shall be protected throughout by an approved fire alarm system in accordance with Section 9.6.

7.15.4.2* The fire alarm system shall include an emergency voice/alarm communication system in accordance with *NFPA 72* with the ability to provide voice directions on a selective basis to any building floor.

A.7.15.4.2 The emergency voice/alarm communication system with the ability to provide voice directions on a selective basis to any building floor might be used to instruct occupants of the fire floor who are able to use stairs to relocate to a floor level below. The selective voice notification feature might be used to provide occupants of a given elevator lobby with a status report or supplemental instructions.

7.15.4.3* The emergency voice/alarm communication system shall be arranged so that intelligible voice instructions are audible in the elevator lobbies under conditions where the elevator lobby doors are in the closed position.

A.7.15.4.3 An audible notification appliance will need to be positioned in the elevator lobby in order to meet the requirement of 7.15.3.4. The continued use of the occupant evacuation elevator system is predicated on elevator lobby doors that are closed to keep smoke from reaching the elevator lobby smoke detector that is arranged to initiate the Phase I emergency recall operation.

7.15.4.4 Two-way Communication System. A two-way communication system shall be provided in each occupant evacuation elevator lobby for the purpose of initiating communication with the fire command center or an alternative location approved by the fire department.

7.15.4.4.1 Design and Installation. The two-way communication system shall include audible and visible signals and shall be designed and installed in accordance with the requirements of ICC/ANSI A117.1, *Accessible and Usable Buildings and Facilities.*

7.15.4.4.2 Instructions.

7.15.4.4.2.1 Instructions for the use of the two-way communication system, along with the location of the station, shall be permanently located adjacent to each station.

7.15.4.4.2.2 Signage for instructions shall comply with the requirements of ICC/ANSI A117.1, *Accessible and Usable Buildings and Facilities*, for visual characters.

N **A.21.6** Refer to the applicable building code for application requirements and definitions related to occupant evacuation elevators (OEE). OEE are not required by code, and they will be provided for a relatively limited number of buildings, mainly office use high-rise buildings over 420 ft (128 m) in lieu of a required additional stairway as a building code exception. They could also be provided on a voluntary basis in other buildings due to ADA or mobility of occupants concerns. It is highly recommended that those involved with design and installation of these systems become familiar with available information such as ASME A17.1/CSA B44, *Safety Code for Elevators and Escalators*, Section 2.27, regarding occupant evacuation operation (OEO) and its nonmandatory Appendix V, "Building Features for Occupant Evacuation Operation." It will be imperative that a great amount of coordination and performance-based design be done between elevator and fire alarm system designers, installation contractors, and the authority having jurisdiction.

Figure A.21.6 demonstrates the basics of OEO. This is a simplified flowchart and is not intended to show all required inputs, outputs, or interfaces. This figure demonstrates some functions that are dictated by ASME A17.1/CSA B44 for reference only. Inclusion of

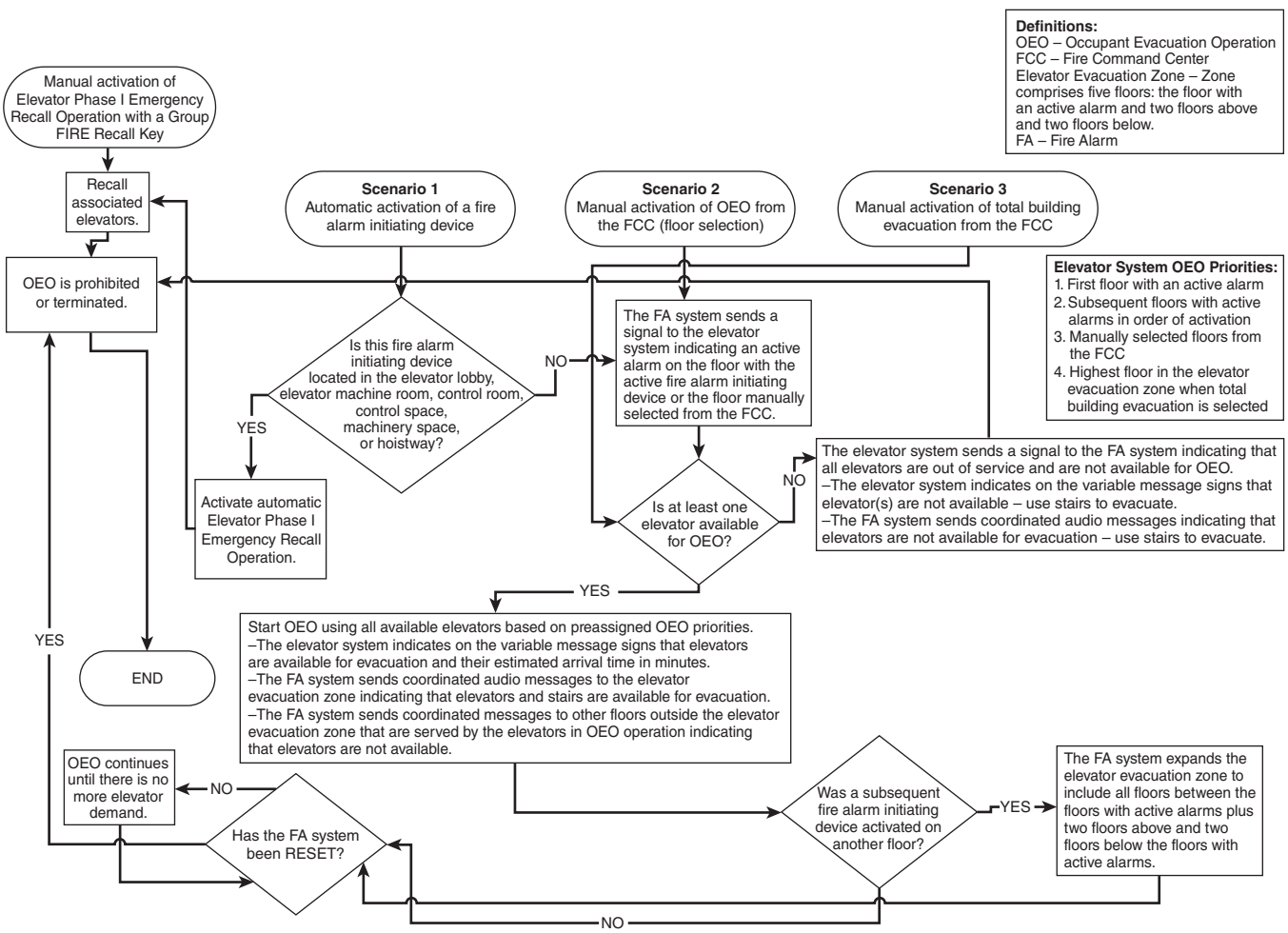

FIGURE A.21.6 *Simplified Occupant Evacuation Operation (OEO) (Elevator system interface with the building fire alarm system based on ASME A17.1, Section 2.27.11, and NFPA 72, Section 21.6).*

elevator system operations in this figure is not intended to suggest that the fire alarm system is responsible for the feature.

Δ **21.6.1 Elevator Status.** Where elevators are to be used for occupant self-evacuation during fires and non-fire emergencies, they shall comply with Sections 21.5 and 21.6.

Δ **21.6.2 Occupant Evacuation Operation (OEO).** Outputs from the fire alarm system to the elevator system shall be provided to implement elevator occupant evacuation operation in accordance with Section 2.27 of ANSI/ASME A17.1/CSA B44, *Safety Code for Elevators and Escalators*, as required in 21.6.2.1 through 21.6.2.5.

If smoke is detected by activation of other automatic detectors in the building (detectors that do not initiate Elevator Phase I Emergency Recall Operation), elevator use continues but in OEO mode.

OEO is activated by signals from the fire alarm system to the elevator system. The floors for evacuation are contiguous floors and consist of the actual floor of alarm, two floors below the floor of alarm and two floors above the floor of alarm. The fire alarm system normally will cause a voice communication message to be delivered to these five contiguous floors with a message that elevators and stairs are available for evacuation.

As part of the elevator system, a scrolling message sign is provided in each elevator lobby. The sign in each elevator lobby of the five contiguous floors will indicate that the elevators are available for evacuation and the estimated time duration in minutes for the next elevator car to arrive. The sign in each elevator lobby of the five contiguous floors will display "Elevators and stairs available for evacuation. Next car in about X minutes." The sign in each elevator lobby of all other floors will display "Elevators temporarily dedicated to other floors." The sign in the designated elevator lobby will display "Elevators dedicated to evacuation. Do not enter elevator."

While in OEO mode, the elevators will stop only at the designated level and the five contiguous floors identified by the fire alarm system to the elevator system. An occupant depressing a call button on any floor other than the five contiguous floors will be ignored. If the active alarm is on the elevator discharge level, automatic initiation of OEO is not possible.

When the fire alarm system and elevator system activate OEO mode, any car that is occupied whether it is moving up or down will proceed to the designated level to discharge its passengers. The doors will close and the elevator will ignore all call buttons, responding only to call buttons of the contiguous five floors. In this manner, the elevator will proceed to one of the contiguous floors as announced by the message sign that displays the estimated time duration in minutes to arrival. If a call button is not depressed at one of the five contiguous floors, the elevator will park at one of these floors with its doors closed until a call is registered.

While in OEO mode, the elevators will shuttle passengers between the five contiguous floors and the designated level only. All other floor call buttons will be ignored. The scrolling message sign in all other floor elevator lobbies will display, "Elevators temporarily dedicated to other floors." When all occupants have been shuttled to the designated level determined by a 60-second period of call button inactivity from the five contiguous floors, the elevator system will park one car at the lowest of the five contiguous floors with its doors closed, ready to respond to another call button from one of the five contiguous floors while all other elevators will park at the designated level with their doors open.

At any time during the event, if another alarm is received at the fire alarm system due to another automatic detector in the building (a detector that does not initiate Elevator Phase I Emergency Recall Operation), the fire alarm system will expand the continuous block of floors from the five floors to the new activated device plus two floors above or below as appropriate. OEO will continue and now include the new contiguous block.

At any time during OEO, if Elevator Phase I Emergency Recall Operation is initiated by a lobby smoke detector, a detector in the elevator machine room controlling that elevator(s), or a detector in the elevator hoistway, OEO ceases. The elevators are captured and proceed to the designated level where they remain with doors open.

N **21.6.2.1 Applicability.** OEO shall only be initiated upon an automatic or manual signal from the fire alarm system to the elevator system.

This clarifies that the fire alarm system is responsible for causing the elevator system to enter OEO mode.

N **21.6.2.1.1*** OEO shall apply separately to each individual elevator and to elevators having *group automatic operation* or designated as an *elevator group* or *group of elevators*.

N **A.21.6.2.1.1** The term *group automatic operation* is defined in ANSI/ASME A17.1/CSA B44, *Safety Code for Elevators and Escalators*. Other terms such as *elevator group* or *group of elevators* are used in Section 26.6 to refer to those elevators sharing a common landing call operation. For instance, if an elevator landing call is registered on a particular floor, any elevator that could respond to that call would be considered in that elevator group. Elevators in an *elevator group* typically share a lobby, hoistway, and/or machine/control room or control space.

It is critical for the purpose of OEO (and all elevator emergency control function interfaces) to identify each elevator group and design the fire alarm system interface accordingly. In tall buildings where OEEs would typically be specified, it is common for elevator groups to be offset, requiring occupant transfer from one group to another to traverse the entire height of the building in an elevator.

N **21.6.2.1.2*** OEO shall function per 21.6.2.1.1 only prior to Elevator Phase I Emergency Recall Operation.

N **A.21.6.2.1.2** When OEO is actuated either manually or automatically, it is applicable to all elevators serving the floors of the elevator evacuation zone. However, when a single elevator or elevator group is placed on manual Elevator Phase I Emergency Recall Operation, OEO continues to operate for the other elevator groups serving the elevator evacuation zone. Similarly, when a fire alarm initiating device(s) described in 21.3.14.1 and 21.3.14.2 is actuated, Elevator Phase I Emergency Recall Operation will cause recall only to the elevator group and not to all elevators in the elevator evacuation zone not associated with that group of recalled elevators. See also 21.6.2.8.

This section reiterates that elevator recall cancels OEO for the affected elevator group. Note that elevator recall only affects the designated group. Depending on the elevator group arrangement, this can result in complicated messaging on floors served by multiple elevator groups.

21.6.2.2 Partial Building Evacuation. Where an elevator or group of elevators is designated for use by occupants for self-evacuation, the provisions of 21.6.2.3 through 21.6.2.6 shall apply for partial building evacuation.

21.6.2.3 Initiation. OEO shall be initiated by either manual means from the Fire Command Center (FCC) or Emergency Command Center in accordance with 21.6.2.4 or by actuation of an automatic fire alarm initiating device in accordance with 21.6.2.3.1.

N **21.6.2.3.1*** An active automatic fire alarm initiating device that does not initiate Elevator Phase I Emergency Recall Operation shall cause the fire alarm system to provide a signal to the elevator system indicating the floor of an active alarm, except as prohibited by 21.6.2.3.6.

N **A.21.6.2.3.1** This signal to the elevator system is caused by the activation of a fire alarm initiating device other than that which is described in 21.3.14.1 and 21.3.14.2.

N **21.6.2.3.2*** The floors to be evacuated shall be a contiguous block of floors designated as "the elevator evacuation zone" consisting of at least the floor with an active alarm, two floors above the floor with the active alarm, and two floors below the floor with the active alarm.

N **A.21.6.2.3.2** The elevator evacuation zone would typically be the floor of an active alarm plus two floors above and two floors below the floor with the active alarm for a total of five floors or as otherwise determined by the authority having jurisdiction.

N **21.6.2.3.3*** When the floor designated as the elevator discharge level falls within the elevator evacuation zone, it is not to be evacuated by the elevator(s), and the fire alarm system shall initiate a voice message to instruct the occupants on that level to exit the building.

N **A.21.6.2.3.3** The elevator discharge level is considered the same level as the designated level of elevator recall for an individual elevator or a group of elevators. More than a single elevator discharge level can exist in a building.

Messaging to occupants on the designated level must be carefully considered when an elevator group designated level is at a level other than the level of exit discharge.

N **21.6.2.3.4** If activation of an automatic fire alarm initiating device that does not initiate Elevator Phase I Emergency Recall Operation occurs on an additional floor(s), including the elevator discharge level at any time while OEO is in effect, the elevator evacuation zone shall be expanded to include all floors with an active alarm, all floors between the highest and lowest floor with an active alarm, plus two floors above the highest floor with an active alarm and two floors below the lowest floor with an active alarm.

N **21.6.2.3.5** If the first active alarm is on the elevator discharge level, automatic initiation of OEO shall not be permitted for all elevators having that same elevator discharge level.

N **21.6.2.3.6*** When the first active alarm is on an elevator discharge level, the fire alarm system shall not send a signal to the elevator system for that alarm or any other active alarm that does not initiate Elevator Phase I Emergency Recall Operation for that group of elevators.

N **A.21.6.2.3.6** If there are different elevator discharge levels in the building, then separate signals from the fire alarm system should be sent to each elevator group serving the active alarm floors to allow for OEO operation of those elevators when the alarm is not at the elevator discharge level. The fire alarm system should not send signal(s) to the elevator system to initiate OEO for a group of elevators when the first active alarm is at the discharge level for that group. Subsequent active alarms at any levels should not cause the fire alarm system to send signal(s) to the elevator system to initiate OEO for that group of elevators. When the first active alarm is not on the discharge level, the fire alarm system should send signals to the elevator system to initiate OEO for that group of elevators and all subsequent active alarms, including at the elevator discharge level.

• **21.6.2.4* Manual Floor Selection.**

N **A.21.6.2.4** The manual selection means such as a switch or a push button for each floor is intended in lieu of automatic initiating devices that could be impaired or out of service and would otherwise have actuated to provide automatic initiation in accordance with 21.6.2.3. Manual fire alarm boxes are not included because they are typically actuated at locations remote from the fire. The manual selection means could also serve to evacuate the building or portions of the building for non-fire-related emergencies. The manual selection means is required to provide a maintained nonlatching output(s) from the fire alarm system to the elevator system to prevent the need for fire alarm system reset upon a wrong or unwanted manual selection of a floor(s).

Authorized or emergency personnel are permitted to use a manual initiation means to initiate OEO. The manual means would need to stipulate the floor selected as the alarm floor and the programming would then create the five contiguous floors as the floor of alarm, two floors above and two floors below.

N **21.6.2.4.1** A means shall be furnished at the FCC to provide for the manual selection of each floor in the building.

N **21.6.2.4.2** The manual floor selection shall be actuated only by authorized or emergency personnel.

N **21.6.2.4.3** When OEO is not yet in effect and a manual floor selection is made to initiate OEO, a signal shall be sent to the elevator system simulating an active alarm for that floor.

N **21.6.2.4.4** When OEO is in effect and a manual floor selection is made, the elevator evacuation zone shall be expanded as described in 21.6.2.3.4.

N **21.6.2.4.5** Each manual selection means shall have the capability to cancel a manually actuated output signal.

N **21.6.2.5* Fire Alarm Output Signals to Elevator System.**

N **A.21.6.2.5** The fire alarm system uses the floor identification to automatically establish an elevator evacuation zone for voice messaging purposes. The elevator system also uses the floor identification to determine the contiguous block of floors to be evacuated (elevator evacuation zone, see A.21.6.2.3.2). The elevator evacuation zone is updated to reflect changing conditions as indicated by the output signal(s). This information is sent to the elevator system and also used for occupant notification. The output signals from the fire alarm system can be in the form of contact closures or serial communications or other approved means. Coordination needs to be provided between the fire alarm system installer, the elevator system installer, and the authority having jurisdiction.

N **21.6.2.5.1** Output from the fire alarm system to the elevator system shall identify each floor with an actuated automatic fire alarm initiating device.

N **21.6.2.5.2** Output from the fire alarm system to the elevator system shall include the following:

(1) Floor(s) with any actuated fire alarm initiating device(s)
(2) Floor(s) selected by manual means from the FCC

N **21.6.2.5.3** The identified floor(s) shall be displayed on the building fire alarm system annunciator at the FCC or on a listed non-fire alarm system annunciator or other annunciator as approved by the authority having jurisdiction.

Δ **21.6.2.6* Occupant Notification.** The in-building emergency voice/alarm communications system shall transmit messages coordinated with the elevator system's variable message signs in all elevator lobbies.

Δ **A.21.6.2.6** Prerecorded automatic voice messages provided by the in-building fire emergency voice/alarm communications system need to be coordinated with the variable message signs provided separately by the elevator system to all affected elevator lobbies and floors served by the elevator(s) operating in OEO so that occupants will understand what to expect and how to react. Additional visual information will be provided in each affected elevator lobby by the elevator system to further inform occupants of the status of the elevators. Refer also to 24.3.6 and associated Annex A material (Messages for One-Way Emergency Communications Systems) for additional information. It is important to note that all elevator lobbies served by elevator(s) operating in OEO, both within the elevator evacuation zone and on other

floors outside that zone, will be considered as affected lobbies, and they will be provided with variable messages controlled by the elevator system. The fire alarm system will not provide automatic voice messages in the affected elevator lobbies, but rather it will provide automatic messages to all floors having those affected lobbies via audible appliances located outside those lobbies. The messages provided by the fire alarm system and the elevator system on the affected floors and lobbies must be coordinated so as not to conflict with each other. It is especially important to address additional automatic or manual alarm actuation(s) and the impact on expanding the elevator evacuation zone and the corresponding voice messaging that has to adjust to the change. Table A.21.6.2.6 gives sample voice message content to be added to normal messaging (to be coordinated with the variable message display provided by the elevator contractor).Voice messaging is permitted to all other floor(s) in the building not in the elevator evacuation zone and not served by elevator(s) performing OEO in accordance with the facility emergency response plan approved by the authority having jurisdiction. For further information on voice messaging strategies refer to NIST Technical Note 1779, *General Guidance on Emergency Communication Strategies for Buildings and FPRF Elevator Messaging Strategies*.

N ***TABLE A.21.6.2.6*** *Sample Voice Message Content*

Condition	*Sample Voice Message*
Specific block of floors being evacuated	"Elevators and stairs are available for evacuation."
Floors not in the elevator evacuation zone within an elevator group performing OEO	"Elevators are not available; they are temporarily dedicated to other floors."
On the discharge level	"Elevators are dedicated to evacuation. Do not enter elevator."
If some elevators have been recalled but other elevator(s) are still available	"Elevators and stairs are available for evacuation."
If all elevators serving a floor or elevator evacuation zone are recalled	"Elevators are out of service. Use stairs to evacuate."

21.6.2.6.1 Automatic voice evacuation messages shall be transmitted to the elevator evacuation zone floors to indicate the need to evacuate and that elevator service is available.

21.6.2.6.2 Automatic voice messages shall be transmitted to the floors that are not in the elevator evacuation zone and are served by the group, to inform occupants that elevator service is not available.

Automatic voice messages are required to be sent to every floor served by the affected elevator group to ensure that all occupants who may call an elevator are provided accurate and proactive communication in a fire event where their elevators are not available for use.

Δ **21.6.2.6.3*** Automatic voice messages shall be transmitted to the floors in the elevator evacuation zone when no elevators serving that elevator evacuation zone are available.

A.21.6.2.6.3 This new message will require a signal(s) from the elevator system to the fire alarm system. This signal(s) will indicate to the fire alarm system that all elevators serving an elevator evacuation zone are not available due to Elevator Phase I Emergency Recall Operation or due to other elevator condition(s) such as inspection, operation, and malfunction.

21.6.2.6.4* Where required by the building code, the emergency voice/alarm communications system's loudspeaker(s) located in each OEE lobby shall be connected to a separate notification zone for manual paging only.

N **A.21.6.2.6.4** The emergency voice/alarm communications system's loudspeaker(s) located in each OEE lobby are not permitted to transmit automatic voice messages since they could interrupt occupants using the required OEE elevator lobby two-way communication system. Therefore, manual paging zones are required for those loudspeakers by applicable building code(s). The specific zone selection will be performed from a fire alarm system paging panel located in the FCC. Since a very large number of individual paging zones could be required, it is permitted to group all OEE lobbies' loudspeakers per floor or vertically per elevator group as a single paging zone. The OEE lobby paging zone will be dedicated to loudspeakers that only serve OEE lobbies and will be separate from all other loudspeakers outside of an OEE lobby.

Given the variable nature of partial evacuation scenarios in a tall building, it is important that emergency responders have the ability to communicate with occupants in key areas. This section requires coordination of the manual paging zones with the authority having jurisdiction to ensure alignment with their response plan and the building emergency plan.

N **21.6.2.6.4.1** Individual paging zones per each OEE lobby on each floor or a grouped paging zone for all OEE lobbies on a floor shall be permitted if approved.

N **21.6.2.6.4.2** A vertical paging zone for each elevator group shall be permitted if approved.

N **21.6.2.6.5** Visual notification appliances (strobes) shall comply with 24.5.17.3(1), 24.5.17.3(2), and 24.5.17.3(3).

21.6.2.7 Total Evacuation. A means to initiate total building evacuation labeled "ELEVATOR TOTAL BUILDING EVACUATION" shall be provided at the FCC.

This provides a simple method for emergency responders to expand the OEO evacuation zone to include all floors served by all elevator groups.

21.6.2.7.1 When the total building evacuation means is actuated, the fire alarm system shall provide a signal to the elevator system indicating that all floors in the building are to be evacuated.

•
Δ **21.6.2.7.2** When the total building evacuation means is actuated, the in-building fire emergency voice/alarm communications system shall transmit an evacuation message throughout the building.

N **21.6.2.8* Suspension of OEO for an Individual Elevator or Group of Elevators.** When OEO has been suspended, the in-building fire emergency voice/alarm communications system shall transmit messages coordinated with the elevator system's variable message signs in compliance with 21.6.2.6.

N **A.21.6.2.8** Suspension of OEO can occur when an individual elevator or group of elevators is recalled by fire fighters using key operated switch(es). It is important to recognize that OEO continues operation using the available elevator(s). The affected elevator(s) will return to OEO operation when fire fighters' emergency operation has been reset.

N **21.6.2.9* Partial Termination of OEO.**

N **A.21.6.2.9** Partial termination can occur when a particular group of elevators has been taken out of service because they have been recalled under automatic Elevator Phase I Emergency Recall Operation, but other elevator(s) in the elevator evacuation zone are still available for evacuation.

N **21.6.2.9.1** OEO shall be terminated for a specific group of elevator(s) when the signal(s) provided in 21.3.14.1 and 21.3.14.2 associated with this group of elevator(s) has initiated Elevator Phase I Emergency Recall Operation for this group of elevator(s).

N **21.6.2.9.2** When OEO has been partially terminated, the in-building fire emergency voice/alarm communications system shall transmit messages coordinated with the elevator system's variable message signs in compliance with 21.6.2.6.

N **21.6.2.10* Total Termination of OEO.** OEO shall be terminated for all elevators in the building upon reset of the fire alarm system.

N **A.21.6.2.10** OEO will not actuate if no elevators are available. There are several instances where signals must be received from the elevator system. One of these is when the Elevator Phase I Emergency Recall key switch is used to manually initiate recall for all elevators. Another situation requiring a signal from the elevator system is when the elevator system cannot provide the intended operation. In this case the fire alarm system needs to know so it does not provide incorrect messaging to a floor(s). See also A.21.6.2.6.3.

For the fire alarm system to reset, all alarm signals must be cleared. This prevents termination interruption of OEO until emergency responders and system technicians have verified that the building has been fully evacuated and/or the emergency event has ended.

21.7 Heating, Ventilating and Air-Conditioning (HVAC) Systems.

FAQ Does *NFPA 72* require duct smoke detectors to be installed?

NFPA 72 does not require duct smoke detectors to be installed. These requirements reside in other codes and standards, such as 9.2.1 of NFPA *101*, which is excerpted below.

NFPA *101* (2018)

9.2.1 Air-Conditioning, Heating, Ventilating Ductwork, and Related Equipment. Air-conditioning, heating, ventilating ductwork, and related equipment shall be in accordance with NFPA 90A, *Standard for the Installation of Air-Conditioning and Ventilating Systems*, or NFPA 90B, *Standard for the Installation of Warm Air Heating and Air-Conditioning Systems*, as applicable, unless such installations are approved existing installations, which shall be permitted to be continued in service.

Although the requirement for the installation of duct smoke detectors is not specifically identified in NFPA *101*, the paragraph cited refers the reader to NFPA 90A, *Standard for the Installation of Air-Conditioning and Ventilating Systems*. Paragraph 6.4.2.1 of NFPA 90A requires that smoke detectors listed for use in air distribution systems be downstream of the air filters and ahead of any branch connections in air supply systems having a capacity greater than 2000 ft^3/min (944 L/sec), and at each story before the connection to a common return and before any recirculation or fresh air inlet connection in air return systems having a capacity greater than 15,000 ft^3/min (7080 L/sec) and serving more than one story.

Applicable building codes often address this requirement in a similar manner by citing NFPA 90A or the associated jurisdictional mechanical code.

When duct smoke detectors are installed, they are to be installed in accordance with the requirements of *NFPA 72* (see 17.7.4, 17.7.5.4.2, and 17.7.5.5). The following excerpt from NFPA 90A is included for reference.

NFPA 90A (2018)

6.4* Smoke Detection for Automatic Control.

A.6.4 The use of smoke detectors in relationship to HVAC systems and high air movement areas and the details regarding their optimum installation are covered in Section 5.7 of *NFPA 72, National Fire Alarm and Signaling Code*.

Protection provided by the installation of smoke detectors and related requirements is intended to prevent the distribution of smoke through the supply air duct system and, preferably, to exhaust a significant quantity of smoke to the outside. Neither function, however, guarantees either the early detection of fire or the detection of smoke concentrations prior to dangerous smoke conditions where smoke movement is other than through the supply air system.

Where smoke-control protection for a facility is determined to be needed, see NFPA 92, *Standard for Smoke Control Systems*.

6.4.1 Testing. All automatic shutdown devices shall be tested at least annually.

6.4.2* Location.

A.6.4.2 The summation of the capacities of individual supply-air fans should be made where such fans are connected to a common supply air duct system (i.e., all fans connected to a common air duct supply system should be considered as constituting a single system with respect to the applicability of the Chapter 6 provisions that are dependent on system capacity).

6.4.2.1 Smoke detectors listed for use in air distribution systems shall be located as follows:

(1) Downstream of the air filters and ahead of any branch connections in air supply systems having a capacity greater than 944 L/sec (2000 ft^3/min)
(2) At each story prior to the connection to a common return and prior to any recirculation or fresh air inlet connection in air return systems having a capacity greater than 7080 L/sec (15,000 ft^3/min) and serving more than one story

6.4.2.2 Return system smoke detectors shall not be required where the entire space served by the air distribution system is protected by a system of area smoke detectors.

6.4.2.3 Smoke detectors shall not be required for fan units whose sole function is to remove air from the inside of the building to the outside of the building.

6.4.3* Function.

A.6.4.3 Where automatic water sprinklers are provided and zoned to coordinate with the HVAC zones, their water flow switches should initiate devices for the functions described in Chapter 6.

Sprinklers are often tested weekly. Where it is desirable to prevent the accompanying automatic shutdown of the fan system(s) referred to in 6.4.3, a means can be permitted to be used to avoid such shutdown temporarily, provided one of the following occurs:

(1) A trouble signal is sustained in the sprinkler supervisory system until the automatic shutdown provision is restored.
(2) The automatic shutdown provision is restored at the end of the time period necessary to test the sprinkler system, its alarms, and related elements.

6.4.3.1 Smoke detectors provided as required by 6.4.2 shall automatically stop their respective fan(s) on detecting the presence of smoke.

6.4.3.2 Where the return air fan is functioning as part of an engineered smoke-control system and a different mode is required, the smoke detectors shall not be required to automatically stop their respective fans.

NFPA 90A (2018) (*Continued*)

6.4.4 Installation.

6.4.4.1 Smoke detectors shall be installed, tested, and maintained in accordance with *NFPA 72*.

6.4.4.2 In addition to the requirements of 6.4.3, where an approved fire alarm system is installed in a building, the smoke detectors required by the provisions of Section 6.4 shall be connected to the fire alarm system in accordance with the requirements of *NFPA 72*.

6.4.4.2.1 Smoke detectors used solely for closing dampers or for heating, ventilating, and air-conditioning system shutdown shall not be required to activate the building evacuation alarm.

6.4.4.3 Where smoke detectors required by Section 6.4 are installed in a building not equipped with an approved fire alarm system as specified by 6.4.4.2, the following shall occur:

(1) Smoke detector activation required by Section 6.4 shall cause a visual signal and an audible signal in a normally occupied area.
(2) Smoke detector trouble conditions shall be indicated visually or audibly in a normally occupied area and shall be identified as air duct detector trouble.

6.4.4.4 Smoke detectors powered separately from the fire alarm system for the sole function of stopping fans shall not require standby power.

21.7.1 The provisions of Section 21.7 shall apply to the basic method by which a fire alarm system interfaces with the heating, ventilating, and air-conditioning (HVAC) systems.

21.7.2* If connected to the fire alarm system serving the protected premises, all detection devices used to cause the operation of HVAC systems, smoke dampers, fire dampers, fan control, smoke doors, or fire doors shall be monitored for integrity in accordance with Section 12.6.

A.21.7.2 This Code does not specifically require detection devices used to cause the operation of HVAC system smoke dampers, fire dampers, fan control, smoke doors, or fire doors to be connected to the fire alarm system.

Where the devices are connected to the fire alarm and signaling system, the wiring to these devices is required to be monitored for integrity in the same way as any other system wiring. Stand-alone detectors, including 120 VAC-powered, single-station smoke detectors used to control HVAC equipment, that are not connected to the fire alarm and signaling system cannot be monitored for integrity.

FAQ

Does *NFPA 72* require detection devices used for HVAC system control to be connected to the building fire alarm and signaling system?

NFPA 72 does not specifically require detection devices used for HVAC system control to be connected to the building fire alarm and signaling system. The requirements for this connection are established by other governing laws, codes, or standards.

For example, NFPA 90A states that duct smoke detectors are required to be installed, tested, and maintained in accordance with *NFPA 72* (see 6.4.4.1 of NFPA 90A). In addition, 6.4.4.2 of NFPA 90A states that where an approved fire alarm and signaling system is installed in a building, the duct smoke detectors required by NFPA 90A are required to be connected to the fire alarm and signaling system.

Where duct smoke detectors are installed to shut down associated HVAC air-handling units and the building does not contain a fire alarm and signaling system, 6.4.4.3 of NFPA 90A requires that duct smoke detector activation cause a visual signal and an audible signal in a normally occupied area, and

that duct smoke detector trouble conditions be indicated visually or audibly in a normally occupied area and identified as air duct detector trouble.

Refer to Exhibit 21.5 for examples of annunciators that could be used to display visual and provide audible signals in a normally occupied area for stand-alone duct smoke detectors. Stand-alone duct smoke detectors are not required by 6.4.4.4 of NFPA 90A to have secondary (backup) power.

21.7.3 Connections between fire alarm systems and the HVAC system for the purpose of monitoring and control shall operate and be monitored in accordance with applicable NFPA standards.

21.7.4 Smoke detectors mounted in the air ducts of HVAC systems shall initiate a supervisory signal.

The purpose of a duct detector is to shut down the air handler so it will not move smoke throughout the building. The use of duct detectors is not a method of detecting a fire in the open area covered by the HVAC system. In accordance with 6.4.4.2.1 of NFPA 90A, a duct smoke detector used solely to close dampers or shut down HVAC equipment is not required to activate the building evacuation alarm.

The preferred signal annunciated on the fire alarm and signaling system for actuation of duct smoke detectors is a supervisory signal — not an alarm signal — to minimize nuisance alarms. This correlates with the requirements in NFPA 90A. Refer to the commentary following Section 21.7 for an excerpt from NFPA 90A.

However, because there are situations and jurisdictions that require or recommend the actuation of a duct smoke detector be annunciated on the fire alarm and signaling system as an alarm signal, two options are permitted in 21.7.4 in lieu of annunciation as a supervisory signal. In buildings where there is no constantly attended location or the system is not sending signals off-site to a supervising station, 21.7.4.1 permits the actuation of duct smoke detectors to initiate an alarm signal on the fire alarm control unit. Additionally, where required by other governing laws, codes, or standards, 21.7.4.2 permits the actuation of duct smoke detectors to initiate an alarm signal on the fire alarm control unit.

21.7.4.1 Smoke detectors mounted in the air ducts of HVAC systems in a fire alarm system without a constantly attended location or supervising station shall be permitted to initiate an alarm signal.

EXHIBIT 21.5

Examples of Stand-Alone Duct Smoke Detector Audible/Visual Signal Annunciators. (Source: System Sensor Corp., St. Charles, IL, and Space Age Electronics, Inc., Sterling, MA)

21.7.4.2 Smoke detectors mounted in the air ducts of HVAC systems shall be permitted to initiate an alarm signal where required by other governing laws, codes, or standards.

21.7.5 If the fire alarm control unit actuates the HVAC system for the purpose of smoke control, the automatic alarm-initiating zones shall be coordinated with the smoke control zones they actuate.

A fire fighters' smoke-control station permits responding fire fighters to manually control the operation of fans, dampers, and other equipment installed for controlling smoke movement within the building.

21.7.6 If carbon monoxide detection or a dedicated carbon monoxide system initiates a ventilation response, a smoke control response of the fire alarm system shall take precedence over the response of the carbon monoxide detectors during a fire alarm condition.

21.7.7 Where interconnected as a combination system, a fire fighter's smoke control station (FSCS) shall be provided to perform manual control over the automatic operation of the system's smoke control strategy.

21.7.8 Where interconnected as a combination system, the smoke control system programming shall be designed such that normal HVAC operation or changes do not prevent the intended performance of the smoke control strategy.

N 21.8 High Volume Low Speed (HVLS) Fans.

Where required by NFPA 13, all HVLS fans shall be interlocked to shut down upon actuation of a sprinkler waterflow switch that indicates waterflow in the area served by the fans.

This requirement was added to the 2019 edition to match NFPA 13 because the responsibility to send the alarm signal to the fan is that of the fire alarm system. High volume low speed (HVLS) fans generate enough airflow to disrupt heat plumes, which can cause delayed activation of sprinklers or activation of sprinklers that are not located above the fire.

21.9 Door and Shutter Release.

21.9.1 The provisions of Section 21.9 shall apply to the methods of connection of door and shutter hold-open release devices and to integral door and shutter hold-open release, closer, and smoke detection devices.

21.9.2 Other than smoke detectors used only for door and shutter release and not for open area protection, all detection devices used for door and shutter hold-open release service shall be monitored for integrity in accordance with Section 12.6.

Monitoring for integrity is not required for detectors integral to the door assembly or stand-alone detectors not connected to the fire alarm and signaling system.

21.9.3 Unless installed as Class D circuits in accordance with 12.3.4, all door and shutter hold-open release and integral door and shutter release and closure devices used for release service shall be monitored for integrity in accordance with Section 12.6.

Generally, magnetic door release appliances are installed so that they release on loss of power. Where Class D circuits or pathways are used in accordance with 21.2.6, fail-safe operation is provided and monitoring for integrity is not required. Refer to the commentary following 21.2.6.

21.9.4 Magnetic door and shutter holders that allow doors to close upon loss of operating power shall not be required to have a secondary power source.

System Design Tip

The purpose of a magnetic door release appliance is to hold doors open under normal conditions and allow the doors to close during smoke and fire conditions. If the designer or the authority having jurisdiction requires the doors to remain open even under a primary power failure, the magnetic door holders must be connected to a circuit with secondary power. This increases the battery size and standby power requirements without providing additional fire safety. The Code does not require secondary power for this additional method of operation. Exhibit 21.6 shows examples of typical magnetic door hold-open release appliances.

21.10 Electrically Locked Doors.

21.10.1* Electrically locked doors in a required means of egress shall unlock in the direction of egress where required by other laws, codes, and governing standards.

Section 21.10 correlates with the requirements of NFPA *101*. The requirements are expressed in terms of unlocking electrically locked doors in a required means of egress in the direction of egress. Means of egress doors are not limited to doors at exits.

NFPA *101* specifies the requirements for means of egress for each occupancy and defines and explains the term *means of egress* in the following excerpt.

NFPA *101* (2018)

3.3.178* Means of Egress. A continuous and unobstructed way of travel from any point in a building or structure to a public way consisting of three separate and distinct parts: (1) the exit access, (2) the exit, and (3) the exit discharge.

A.3.3.178 Means of Egress. A means of egress comprises the vertical and horizontal travel and includes intervening room spaces, doorways, hallways, corridors, passageways, balconies, ramps, stairs, elevators, enclosures, lobbies, escalators, horizontal exits, courts, and yards.

EXHIBIT 21.6

Magnetic Door Hold-Open Release Appliances. (Source: Edwards, Mebane, NC)

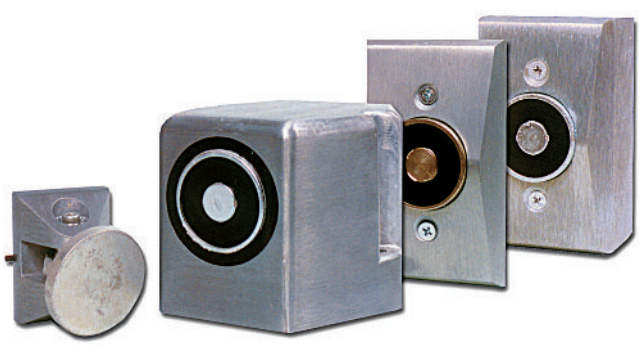

The Code requires unlocking as prescribed by other laws, codes, and governing standards. Examples of how other laws, codes, and standards may prescribe unlocking requirements are in A.21.10.1. Other codes, standards, and authorities having jurisdiction may also include or provide specific permission for doors to remain locked in certain situations. Examples include detention and correctional facilities and psychiatric wards in a health care facility.

A.21.10.1 Doors are commonly locked for various security reasons. Though doors are permitted to be locked to prevent ingress, doors are generally not permitted to be locked to restrict egress unless specifically permitted by governing laws, codes, and standards. Examples of special locking arrangements include delayed egress locking and access control locking. Approved locking requirements by governing laws, codes, and standards can vary extensively. For example, some might require all fire alarm initiating devices to immediately unlock electrically locked egress doors, while others might permit such doors to remain locked when a single manual fire alarm box is actuate. Some codes might also permit electrically locked doors to remain locked when a single smoke detector has actuated. These allowances are typically permitted only in sprinklered buildings and are generally used as additional safeguards to counter efforts to breach security, without compromising occupant safety.

21.10.2 For all means of egress doors connected in accordance with 21.10.1 where secondary power supplies of fire alarm control units are used, they shall comply with 10.6.7.

21.10.3* Secondary power supplies of fire alarm control units shall not be utilized to maintain means of egress doors in the locked condition unless the fire alarm control unit is arranged with circuitry and sufficient secondary power to ensure that the means of egress doors will unlock within 10 minutes of loss of primary power.

A.21.10.3 A problem could exist when batteries are used as a secondary power source if a fire alarm control unit having 24 hours of standby operating power were to lose primary power and be operated for more than 24 hours from the secondary power source (batteries). It is possible that sufficient voltage would be available to keep the doors locked, but not enough voltage would be available to operate the fire alarm control unit to release the locks.

Subsection 21.10.3 and A.21.10.3 discuss the requirement for fire alarm control unit secondary power supplies to be designed with sufficient capacity to ensure that the means of egress doors will unlock within 10 minutes of loss of primary power. Without this requirement, fire alarm and signaling system secondary power supplies (such as batteries in a fire alarm control unit) could be undersized and not have enough voltage to release the door locks when required.

FAQ

Under what circumstances does *NFPA 72* permit the use of the fire alarm and signaling system secondary power supply to maintain doors in a locked condition?

In general, life safety concerns dictate that means of egress doors unlock immediately on actuation of the fire alarm and signaling system as prescribed in other laws, codes, or standards. However, circumstances sometimes exist where unlocking the doors (e.g., unlocking cell doors in a jail) could cause a security problem that poses a greater life safety risk than maintaining the exit doors locked. A secondary power supply in accordance with 10.6.7.3.1(1) is permitted to maintain the doors locked as long as sufficient power is provided to unlock the doors within 10 minutes. This time period permits security or other personnel to investigate the situation and take appropriate action to ensure an adequate level of security before the doors are unlocked.

21.10.4 Locks powered by independent power supplies dedicated to lock power and access control functions, and that unlock upon loss of power, shall not be required to comply with 21.10.2.

21.10.5 If means of egress doors are unlocked by the fire alarm system, the unlocking function shall occur prior to, or concurrent with, activation of any public-mode notification appliances in the area(s) served by the normally locked means of egress doors.

This is to prevent a possible panic situation where the fire alarm and signaling system has actuated and notification appliances are signaling the occupants to evacuate, but they cannot exit because the doors are still locked.

21.10.6 All doors that are required to be unlocked by the fire alarm system in accordance with 21.10.1 shall remain unlocked until the fire alarm condition is manually reset.

21.11* Exit Marking Audible Notification Systems.

A.21.11 When a fire alarm evacuation signal actuates, the exit marking system will be actuated. In some cases, the activation might be sequenced to meet the fire safety plan of the property.

21.11.1 Where required by other governing laws, codes, standards, or the authority having jurisdiction, exit marking audible notification appliances shall be actuated by the building fire alarm system.

21.11.2 Exit marking systems shall meet the requirements of Chapter 18.

Exit marking audible notification systems provide audible cues to assist building occupants to find an exit during an emergency. Although these systems are not required by the Code, Section 21.11 and 18.4.8 detail the requirements for their installation as part of a building fire alarm and signaling system if the exit marking audible notification system is required by other codes or the authority having jurisdiction. If exit marking systems are required by another code, standard, or authority having jurisdiction, that system should be actuated by the building fire alarm and signaling system.

References Cited in Commentary

ANSI/ASME A17.1/CSA B44, *Safety Code for Elevators and Escalators*, 2016 edition, American Society of Mechanical Engineers, New York, NY.

National Building Code of Canada (NBCC), National Research Council of Canada, Ottawa, Canada.

NFPA 13, *Standard for the Installation of Sprinkler Systems*, 2019 edition, National Fire Protection Association, Quincy, MA.

NFPA 90A, *Standard for the Installation of Air-Conditioning and Ventilating Systems*, 2018 edition, National Fire Protection Association, Quincy, MA.

NFPA *101®*, *Life Safety Code®*, 2018 edition, National Fire Protection Association, Quincy, MA.

NFPA 5000®, *Building Construction and Safety Code®*, 2018 edition, National Fire Protection Association, Quincy, MA.

Reserved Chapter

In the 2019 edition of *NFPA 72®*, *National Fire Alarm and Signaling Code®*, Chapter 22 is reserved for future use.

Protected Premises Alarm and Signaling Systems

CHAPTER

23

Chapter 23 covers the requirements for the installation and performance of *protected premises (local) fire alarm systems* defined in 3.3.111.4. Building fire alarm systems, dedicated function fire alarm systems, and releasing fire alarm systems are subcategories of protected premises (local) fire alarm systems. Chapter 23 is a focal chapter of the Code because it contains requirements common to all local fire alarm systems, excluding household fire alarm systems (see Chapter 29). Furthermore, this chapter acknowledges the inclusion of carbon monoxide (CO) alarms and systems.

The following list is a summary of significant changes to Chapter 23 for the 2019 edition of the Code:

- Added 23.6.1.3(3) and A.23.6.1.3(3) to address the expansion, alteration, or modifications to existing signaling line circuits (SLCs).
- Revised title of 23.6.3.6 to be Network Design Analysis.
- Added A.23.6.2, A.23.6.2.3, and A.23.6.2.4 to clarify requirements for Class N devices.
- Added A.23.6.3.3, A.23.6.3.3.1.2, and A.23.6.3.3.2 to clarify requirements for the Class N shared pathways.
- Added A.23.6.3.5.1 and A.23.6.3.5.2 to clarify the requirements of the management organization and ensure the IT or network infrastructure is being properly inspected, tested, and maintained to support the operation of the life safety Class N network.
- Added A.23.6.3.6.1 and A.23.6.3.6.2 to clarify that when the network design analysis is completed, it should verify that adequate bandwidth and power is maintained to allow the Class N network and transport devices to operate properly.
- Added A.23.6.3.7.1 and A.23.6.3.7.2 to address written procedures and to clarify that the maintenance plan incorporates the maintenance and update requirements to support the Class N shared pathway and supporting routers and switches.
- Revised A.23.6.3.8 to provide guidance for the network risk analysis for Class N.
- Added 23.8.4.2 to address Building System Information Units (BSIUs).
- Added 23.8.4.9, which was generally extracted from NFPA 720, *Standard for the Installation of Carbon Monoxide (CO) Detection and Warning Equipment,* to address CO detector signals.
- Revised 23.8.6 to address the occupant notification requirements that correspond to the respective CO alarm zone.
- Added 23.9.2 to address the in-building emergency voice/alarm communications (EVACs) requirements when CO detection is provided.
- Added 23.15.6 to address the protected premises emergency control function requirements for CO.
- Revised 23.16.3 to clarify the alarm signal requirements for low-power radio (wireless) systems.

23.1 Application.

NFPA 720

23.1.1* The application, installation, and performance of alarm and signaling systems within protected premises shall comply with the requirements of this chapter.

Δ **A.23.1.1** Chapter 23 is intended to cover alarm and signaling systems and their components, such as fire alarm, mass notification, carbon monoxide, and other signaling systems.

In-building mass notification systems, defined in 3.3.90.1.3, are systems used to provide appropriate information and instructions to occupants in emergency situations, including terrorist threats, chemical or biological hazards, and natural disasters. These systems can be separate from or integrated with the fire alarm system. When a fire alarm system is also used for mass notification, the system is considered a *combination system*, as defined in 3.3.111.1, and the requirements of 23.8.4 for combination systems apply. Because these systems are also used for mass notification, the requirements of Chapter 24 also apply.

FAQ How is the need established for a fire alarm system and its features?

System Design Tip

Chapter 23 does not require the installation of a protected premises (local) fire alarm system or any type of emergency control functions. Required systems are needed due to requirements of other applicable codes or statutes that have been adopted by the enforcing jurisdiction (see 23.3.1). Typically, the need for these systems and their features is established by enabling codes such as the local building code or NFPA *101®*, *Life Safety Code®*. Those codes are the source of any requirements for the installation of a fire alarm system, supervisory functions, or other emergency control functions controlled by a protected premises (local) fire alarm system. For nonrequired systems, the system designer is responsible for determining the functions and features that the system will include. Chapter 23 explains the methods of accomplishing these functions where required by another code, standard, or authority having jurisdiction or where selected by the system designer to meet the goals of the system owner. See Section 23.3 and associated commentary.

23.1.2 The requirements of Chapters 7, 10, 12, 14, 17, 18, 21, 24, and 26 shall apply unless otherwise noted in this chapter.

All fire alarm systems installed within the protected premises must first comply with Chapter 23 and then comply with the requirements of other chapters. The other chapters may add to the requirements for protected premises system installations.

If a protected premises (local) fire alarm system sends a signal to a supervising station, in accordance with 26.1.1, the entire system becomes a supervising station alarm system. However, as explained in A.26.1.1, the requirements of Chapter 23 still apply to the portions of the system at the protected premises, including the signaling between the transmitter and the balance of the protected premises portion of the system.

Two choices can be made where a multiple-building, contiguous property has its proprietary supervising station in one of the on-site buildings. Each building can have its own protected premises system and be connected to the on-site supervising station through a transmitter and transmission channel that meet the requirements of Section 26.6. Alternatively, the individual building systems can be connected directly to a master fire alarm control unit (FACU) that is colocated in the supervising station. These systems must comply with the requirements of 23.8.2.1, 23.8.2.2, and 23.8.2.5 for interconnected FACUs. In addition, they must comply with the requirements for multiple buildings in 10.18.5 and 26.2.6.

For a single-building property, the initiating devices and notification appliances are connected either directly or through zone or floor FACUs to the proprietary supervising station using initiating device circuits or SLCs. Where other interconnected control units are used, the requirements of 23.8.2.1, 23.8.2.2, and 23.8.2.5 apply. Regardless of the method of connection, the proprietary supervising station facilities for both single- and multiple-building properties must comply with the requirements of Section 26.4.

Where signals from a multiple-building, campus-style protected premises are sent to a central supervising station or remote supervising station, they can be sent directly from each building if each building has its own separate fire alarm system, or they can be sent from the premises (campus) main FACU where a single fire alarm system serves the entire campus. The single fire alarm system can comprise multiple interconnected FACUs or a single FACU that serves the entire premises. Compliance with 10.18.5, 23.8.2.1, 23.8.2.2, 23.8.2.5, and 26.2.6 must be considered when deciding on an appropriate configuration. The consideration of any control or display location requirements from the applicable building code would be prudent. See the commentary following A.10.18.3.

Chapter 14, which covers inspection, testing, and maintenance, was added to the list of chapters applicable to Chapter 23. Regular testing of a fire alarm system provides ongoing assurance that equipment is performing as intended and improves overall system reliability by minimizing the time interval between the occurrence of a problem and when it is discovered.

Some jurisdictions develop and enforce their own fire alarm system testing requirements. However, the purpose of 23.1.2 is to provide the authority having jurisdiction with an enforceable, mandatory requirement to test all fire alarm systems in accordance with the Code. The requirements of Chapter 14 apply to both new and existing fire alarm system installations.

•

23.1.3 The requirements of this chapter shall not apply to Chapter 29 unless otherwise noted.

Chapter 29 covers single- and multiple-station alarms and household signaling systems and contains specific requirements for the installation of warning equipment in residential occupancies. See the introductory commentary in Chapter 29 regarding that chapter's scope and the definition of the term *fire warning equipment* in 3.3.115.

Fire alarm systems as discussed in Chapter 23 may be used in single living units or as dwelling fire warning systems if the requirements of Chapter 29 are satisfied. Where a fire alarm system is installed in an apartment building to serve common areas, smoke detectors and notification appliances connected to the system may be used in individual dwelling units in place of the required smoke alarms, unless prohibited by the adopted building, occupancy, or fire code or by the authority having jurisdiction. The system functions in each dwelling unit would need to be arranged to mimic requirements specified in terms of smoke alarms, and the installation in the dwelling unit would still need to comply with the requirements of Chapter 29.

•

23.2 General.

23.2.1* Purpose. The systems covered in Chapter 23 shall be for the protection of life or property, or both, by indicating the existence of heat, fire, smoke, carbon monoxide, or other emergencies impacting the protected premises. NFPA 720

A.23.2.1 Systems can be installed for the purposes of life safety, property protection, or both. Evacuation or relocation is not a required output action for every system installed in accordance with Chapter 23.

FAQ

Do all fire alarm systems require the installation of notification appliances for occupant notification?

Occupant notification for evacuation or relocation is not a required output action of every fire alarm system installed in accordance with this chapter. The primary purpose of the systems covered in Chapter 23 is "the protection of life or property, or both." Subsection 23.2.1 gives the protection of both life and property equal and full consideration. See 23.8.6.1 and its associated commentary about requirements for systems where occupant notification is required.

Fire alarm systems are often installed for reasons other than occupant notification, such as the supervision and actuation of extinguishing systems. The phrase "or other emergencies impacting the protected premises" reflects the role that fire alarm systems interfaced with mass notification systems (MNSs) can play in signaling for other emergencies such as terrorist threats, chemical or biological hazards, and natural disasters.

23.2.2 Software and Firmware Control.

Special requirements are necessary for computerized or microprocessor-based fire alarm systems. Two types of software, executive and site-specific, are defined in the Code.

Executive software, defined in 3.3.279.1, usually resides on a read-only memory (ROM) integrated circuit that is programmed at the factory, is considered a component of a listed FACU, and cannot be modified in the field by the installer or user.

Site-specific software, defined in 3.3.279.2, typically covers the type and quantity of hardware, customized labels, and the specific operating features of a system. Site-specific software contains information such as the operations matrix and device addresses. The installer programs site-specific software.

23.2.2.1 A record of installed software and firmware version numbers shall be prepared and maintained in accordance with Sections 7.5 and 7.7.

Subsection 7.7.2 requires that, with every new system, a documentation cabinet must be installed at the system control unit or at another approved location at the protected premises and that all record documentation be stored in the documentation cabinet. Although the version numbers might already be recorded on the permanently attached diagram in the control unit, it is still advisable to document this information and store it inside the required documentation cabinet.

The record of completion form required in Section 10.20 and Section 7.5 [see Figures 7.8.2(a) through 7.8.2(f)] must also show the current software version installed. A record copy of the actual site-specific software must be provided to the system owner in accordance with 7.5.3, 7.5.7, and 14.6.1.2.

NFPA 720

23.2.2.1.1* Software and firmware within the alarm and signaling system that interfaces to other required software or firmware shall be functionally compatible.

A.23.2.2.1.1 Compatibility between software systems is necessary to ensure that the systems can communicate correctly and that the overall system can function as intended. Unfortunately, software that is compatible can become incompatible when the software is updated. Newer revisions of software might not maintain compatibility with older revisions. This paragraph requires that the fire alarm software or firmware that interfaces with software or firmware in another system is compatible. An example might be a smoke control system that gets information from the fire alarm system. The term "required" indicates that this compatibility requirement is intended for required functions (e.g., smoke control) and not for supplemental functions that are not part of the required operation of the fire alarm system. An example of a supplemental function might be an RS-232 port that connects to a terminal emulator

program used for maintenance purposes. The term "functionally" is intended to ensure that the intended functionality is maintained by the software. It is trying to avoid a situation where a change in software revision might still be compatible but changes the available functionality so that the two systems no longer perform the intended functions, even though the software communicates correctly.

23.2.2.1.2* The compatible software or firmware versions shall be documented at the initial acceptance test and at any reacceptance tests.

A.23.2.2.1.2 Compatibility between systems will be documented in one or the other (or both) of the manufacturer's installation documents for the compatible products and controlled by the listings agencies. This documentation will be referenced in the marking on the product. The documentation might be paper copy or electronic media (disk, website, etc.). When a software revision changes, the documentation can be consulted to ensure that it is still compatible with the software or firmware on the other side of the interface.

23.2.2.2* All software and firmware shall be protected from unauthorized changes.

A.23.2.2.2 A commonly used method of protecting against unauthorized changes can be described as follows (in ascending levels of access):

(1) *Access Level 1.* Access by persons who have a general responsibility for safety supervision, and who might be expected to investigate and initially respond to a fire alarm or trouble signal
(2) *Access Level 2.* Access by persons who have a specific responsibility for safety, and who are trained to operate the control unit
(3) *Access Level 3.* Access by persons who are trained and authorized to do the following:
    (a) Reconfigure the site-specific data held within the control unit, or controlled by it
    (b) Maintain the control unit in accordance with the manufacturer's published instructions and data
(4) *Access Level 4.* Access by persons who are trained and authorized either to repair the control unit or to alter its site-specific data or operating system program, thereby changing its basic mode of operation

The software and firmware must be protected from unauthorized changes. A single change in software has the potential of affecting the operation of the entire fire alarm system. In terms of reliability, software is the least reliable component of the fire alarm system. It is important that the system be programmed to match the requirements of the Code, the authority having jurisdiction, project specifications, and the owner's fire protection goals.

23.2.2.3 All changes shall be tested in accordance with 14.4.2.

Paragraph 14.4.2.4 specifies testing that must be performed when changes are made to site-specific software. When software is revised, the record of completion form must be updated to reflect the changes. If the authority having jurisdiction examines a control unit or record of completion form and finds a version of software or firmware that is different from the version installed at the time of the acceptance test, the reacceptance test required by 14.4.2.4 must be conducted.

N **23.2.3 Separate Systems.** The requirements of this chapter shall not preclude the use of separate fire, carbon monoxide, or other life safety systems provided the systems do not generate simultaneous conflicting notification to the building occupants or conflicting actuation of safety functions. NFPA 720

This new subsection clarifies that this chapter does not preclude the use of separate individual systems such as CO, mass notification, or other types of life safety systems if the systems do not generate simultaneous conflicting notification to the building occupants or conflicting actuation of safety functions.

23.3 System Features.

The features required for a protected premises fire alarm system shall be documented as a part of the system design and shall be determined in accordance with 23.3.1 through 23.3.3.

System Design Tip

For small, uncomplicated systems, documentation might be accomplished by providing information on the record drawings. For other systems, the system designer would likely document this information in a formal analysis. Whether the written analysis is called a design narrative, design analysis, basis of design report, or design brief, it should clearly explain the design objectives for the system and the decisions made to ensure that the design objectives are met.

23.3.1* Required Systems. Features for required systems shall be based on the requirements of other applicable codes or statutes that have been adopted by the enforcing jurisdiction.

N **A.23.3.1** Building codes provide requirements for systems such as sprinklers, fire alarm systems, standpipe systems, and so forth.

These requirements are based on the occupancy of a building. Inspection and testing verifies compliance to the code(s). Upon completion of all inspection and testing, the authority having jurisdiction will issue an occupancy permit, allowing people to utilize the building for its intended use.

Once the occupancy permits have been granted, these systems are not allowed to be removed or modified without the approval of the property or building or system owner or the owner's designated representative. See 23.6.3.5.

This can create issues when there is not a clear understanding of the separation between the fire protection system and the tenant equipment. Class N shared pathways allow for Level 1 or Level 2 pathways to be shared with life safety and non–life safety equipment as long as the criteria outlined in 23.6.3 is met. The building system is allowed to leverage the tenant's equipment, and in this case the tenant is not allowed to remove or modify that equipment.

The use of Ethernet (wired or wireless) is an example where the tenant might have installed an Ethernet infrastructure that could easily be leveraged for the installation of additional fire alarm system capacity, but once that system is installed, tested, and inspected per the code, the IT team can no longer remove or modify the system without the approval of the property or building or system owner or the owner's designated representative.

23.3.2* Nonrequired (Voluntary) Systems and Components. The features for a nonrequired system shall be established by the system designer on the basis of the goals and objectives intended by the system owner.

System Design Tip

A nonrequired system is installed for a specific purpose. Whoever makes the decision to install a nonrequired system must have specific reasons for installing the system. The designer must discuss fire protection goals with the owner to ensure that they agree with the choice of fire alarm system and its expected performance.

A.23.3.2 Nonrequired fire alarm features are defined in 3.3.180. These are fire alarm systems or components that are not required by the building or fire codes and are installed voluntarily by a building owner to meet site-specific fire safety objectives. There is a need to properly

document the nonrequired system and components. Nonrequired components must be operationally compatible in harmony with other required components and must not be detrimental to the overall system performance. It is for this reason that 23.3.2.1 mandates that nonrequired (voluntary) systems and components meet the applicable installation, testing, and maintenance requirements of this Code. It is not the intent of the Code to have the installation of nonrequired (voluntary) systems or components trigger a requirement for the installation of additional fire alarm components or features in the building. For example, if a building owner voluntarily installs a fire alarm control unit to transmit sprinkler waterflow signals to a central station, that does not trigger a requirement to install other fire alarm system components or features, such as manual fire alarm boxes, occupant notification, or electronic supervision of sprinkler control valves. See also A.17.5.3.3 and A.18.1.5.

Alternatively, supervision and power requirements are required to be taken into account for the nonrequired components/systems on the required fire alarm systems.

FAQ What is a nonrequired system, and what requirements must it meet?

Nonrequired systems are installed to meet specific performance criteria desired by the owner. Although the building code, the fire code, or other NFPA standards may not mandate its installation or performance, the system still must meet the requirements of *NFPA 72*. The intended performance needs to be documented so that the authority having jurisdiction can approve the final installation. Nonrequired systems that do not meet the requirements of the Code can create a false sense of security for owners and occupants who think they are protected by a code-compliant fire alarm system. Note that the terms *nonrequired* and *supplementary* have different meanings and are not interchangeable. See the definitions of these terms in 3.3.180 and 3.3.296.

Subsection 23.3.2 does not require that a building owner who wants to install a fire alarm system in a particular area of a building for property protection install a complete fire alarm system throughout the building. The Code contains specific guidance on the use of dedicated function fire alarm systems. See 3.3.111.4.2 for the definition of the term *dedicated function fire alarm system*. For example, if a building owner installs a fire detection and alarm system in a computer room for protection of the computer equipment, that system would have to meet the requirements of the Code for the area it protects. Documenting the rationale and design basis of the system is critical. Otherwise, an authority having jurisdiction may see the fire alarm system installed in the computer room and, not understanding that it was installed for specific property protection purposes, require the installation of additional devices and equipment throughout the building that extend coverage of the system beyond the original intent.

23.3.2.1 Nonrequired protected premises systems and components shall meet the requirements of this Code.

All fire alarm system installations are required to comply with the requirements of this Code, regardless of the reason that they are installed.

23.3.2.2 Nonrequired systems and components shall be identified on the record drawings required in 7.2.1(15).

Section 23.3 requires that the system features for both required and nonrequired systems be documented as a part of the system design. Nonrequired systems and components are often installed because the building owner has specific fire safety objectives, such as early fire detection in a computer room, warehouse, or other high-hazard or high-value area. The purpose and design basis of the system should be documented for future reference if questions arise about why the system was installed.

23.3.3 Required Features.

The functions of a fire alarm system vary, depending on the requirements of the applicable codes, the requirements of the authority having jurisdiction, and the objectives of the system owner. The Code does not require the inclusion of specific features. The features of any system can include any or all of the features listed in 23.3.3.1.

NFPA 720

23.3.3.1* Building Alarm and Signaling Systems. Protected premises systems that serve the alarm and signaling needs of a building or buildings shall include one or more of the following systems or functions:

(1) Manual fire alarm signal initiation
(2) Automatic fire alarm and supervisory signal initiation
(3) Monitoring of abnormal conditions in fire suppression systems
(4) Actuation of fire suppression systems
(5) Actuation of emergency control functions
(6) Actuation of fire alarm notification appliances
(7) In-building fire emergency voice/alarm communications
(8) Automatic carbon monoxide alarm and supervisory signal initiation
(9) Actuation of carbon monoxide notification appliances
(10) Guard's tour supervisory service
(11) Process monitoring supervisory systems
(12) Actuation of off-premises signals
(13) Combination systems

FAQ What is the purpose of a building fire alarm system?

A building fire alarm system is defined in 3.3.111.4.1 as "a protected premises fire alarm system that includes any of the features identified in 23.3.3.1 and that serves the general fire alarm needs of a building or buildings and provides notification."

Δ **A.23.3.3.1** The following functions are included in Annex A to provide guidelines for utilizing building systems and equipment in addition to proprietary fire alarm equipment in order to provide life safety and property protection. Building functions that should be initiated or controlled during a fire alarm condition include, but should not be limited to, the following:

(1) Elevator operation consistent with ANSI/ASME A17.1/CSA B44, *Safety Code for Elevators and Escalators*
(2) Unlocking of stairwell and exit doors *(see NFPA 80 and NFPA 101)*
(3) Release of fire and smoke dampers *(see NFPA 90A and NFPA 90B)*
(4) Monitoring and initiating of self-contained automatic fire extinguishing system(s) or suppression system(s) and equipment *(see NFPA 11, NFPA 12, NFPA 12A, NFPA 13, NFPA 14, NFPA 15, NFPA 17, NFPA 17A, and NFPA 750)*

23.3.3.2* Dedicated Function Fire Alarm Systems.

The paragraphs in 23.3.3.2 apply to other functions, such as elevator recall and power shutdown, that may require the use of a fire alarm system to accomplish specific objectives in buildings that are not otherwise required to have a fire alarm system. See 3.3.111.4.2 for the definition of the term *dedicated function fire alarm system*.

A.23.3.3.2 Examples of dedicated function fire alarm systems would include an elevator recall control and supervisory control unit, as addressed in 21.3.2, or a system used specifically to monitor sprinkler waterflow and supervisory functions.

23.3.3.2.1 In facilities without a building fire alarm system, a dedicated function fire alarm system shall be permitted and shall not be required to include other functions or features of a building fire alarm system.

FAQ

What are examples of "other functions or features" that are not required to be included?

A dedicated function fire alarm system could be installed in a building that, by code, does not require a fire alarm system to be installed. If a dedicated function fire alarm system is installed, it is not required to include other functions or features of a building fire alarm system. A dedicated fire alarm system may not require the following:

- Installing and connecting manual fire alarm boxes at the entrances or exits from the building
- Installing and connecting audible and visual notification appliances throughout the building
- Connecting the control unit to transmission channels and having it transmit signals off-site to a supervising station

Similarly, if a dedicated function fire alarm system is installed in a building that by code does not require a fire alarm system to monitor the sprinkler waterflow switches and sprinkler valve supervisory switches, it does not mean that this system is now required to operate like a building fire alarm system.

23.3.3.2.2 Where a dedicated function fire alarm system exists and a building fire alarm system is subsequently installed, the systems shall be interconnected and comply with 23.8.2.

The building fire alarm system should monitor the operation of dedicated function fire alarm systems and all other fire alarm systems or control units in the building. These other systems would be monitored for conditions such as alarm, supervisory, and trouble by the building fire alarm system.

23.4 System Performance and Integrity.

23.4.1 Purpose. Section 23.4 provides information that shall be used in the design and installation of protected premises fire alarm systems for the protection of life and property.

23.4.2 Circuit Designations. Initiating device circuits, notification appliance circuits, and signaling line circuits shall be designated by class, depending on the circuit's capability to continue to operate during specified fault conditions as indicated in Sections 23.5 through 23.7.

FAQ

Who is responsible for selection of a circuit performance class?

The Code requires the pathway classification be designated in accordance with the pathway performance classes in Chapter 12 but does not require the use of a specific pathway class. Unless another code or the authority having jurisdiction designates a pathway class to use, the designer is responsible for designating the pathway classifications. See 23.4.3.1 and its commentary.

System Design Tip

Chapter 12 provides performance requirements for Class A, Class B, Class C, Class D, Class E, Class N, and Class X pathways. The pathway class designations can be applied to all types of fire alarm circuits, not just initiating device circuits, notification appliance circuits, and SLCs. Annex F provides class and style wiring diagrams for reference to pathway designations no longer used.

System Design Tip

The type of pathway selected by the designer should be based on consideration of the number of devices connected to the pathway, the amount of detection that would be lost during a fault condition, and the impact that the loss of detection would have on life safety or property protection. These selections can be based on the number and condition of occupants, the length of the pathway, and other factors.

System Design Tip

The designer must consider the performance objectives of the system and the influences listed in 23.4.3.2 when selecting fire alarm system pathway classifications. It is not required that a single class be selected and used throughout the system. Differing classes can be used in a system, depending on the capabilities of the FACU and the design objectives for the system.

The pathway performance depends on two factors: how the circuit is physically wired and how the FACU operates during the specified fault condition(s). Chapter 12 provides the requirements for operation of the circuit under fault conditions as well as any specific physical arrangement of the circuit, such as requirements for a redundant pathway.

Chapter 12 also designates levels of survivability for pathways. Except for fire alarm systems using tone as provided in Section 23.10, Chapter 23 does not require the use of any level of pathway survivability. However, there are applications where it would be prudent design practice to provide a level of survivability. For example, pathways that control the actuation of a remote extinguishing system or the actuation of a critical fire safety control function may necessitate a level of survivability to meet site-specific fire safety objectives.

Prescriptive requirements for pathway survivability are provided for pathways included as a part of emergency communications systems (ECSs) (see 24.3.14 and 24.4.8.6.6) and part of public emergency alarm reporting systems (see 27.6.3.1.3). Where pathway survivability is required by another section of the Code, equal protection is required to be provided for power supply circuits (see 10.6.11.3.1.3).

System Design Tip

The designer is permitted, and in some cases required, to conduct a risk analysis, document the approach, and provide technical justification for the pathway survivability selected (see 23.10.2, 24.3.14.5, 24.3.14.6, 24.3.14.11, 24.3.14.12, and 24.5.4.2). This is similar to where the Code identifies that the system designer is responsible for conducting an analysis to determine the level of pathway classification (see 7.3.9.1 and 23.4.3.1).

23.4.2.1 Specified fault conditions shall result in the annunciation of a trouble signal at the protected premises within 200 seconds as required in Section 12.6.

23.4.2.2* Where the power to a device is supplied over a separate circuit from the signaling line circuit or initiating device circuit, the operation of the power circuit shall meet the performance requirements of the initiating device circuit or signaling line circuit, unless different performance requirements are established in accordance with the evaluation in 23.4.3 and approved by the authority having jurisdiction.

In some cases, a fire alarm device is connected to an SLC but is supplied with operating power by a separate power circuit. The power circuit is required to meet the same performance requirements as the SLC. For example, if the SLC to which a smoke detector is attached is a Class A pathway, the power circuit to the smoke detector would have to be arranged in a manner that provides the same level of performance under the specified fault conditions as the SLC. Different performance requirements might be acceptable where an evaluation and approval of the authority having jurisdiction are provided.

A.23.4.2.2 The intent of this paragraph is to prevent situations where the signaling line circuit to a device is required to be one class of operation, while the power circuits, running in the same raceways and subject to the same threats, are wired to a lower class of operation.

This means that it is possible to have power wiring connected to a device that is of a different class than the signaling line or initiating device circuits. One example of where meeting the same minimum performance requirements would still allow different classes of wiring is where the performance requirements are based on distance or the number of devices attached to the wires. For example, if the signaling line circuit supplies 200 devices and the performance requirement is that not more than 10 devices be lost to a wiring fault, then the class of wiring on the signaling line circuit will be Class A, with isolators to protect against shorts. Where the power wires never supply more than 10 devices, the power wires could be wired as Class B.

23.4.3 Pathway Classification.

See 3.3.197 for the definition of the term *path (pathways)*. Also see Section 12.3 for pathway class designations.

23.4.3.1 The class of pathways shall be determined from an evaluation based on the path performance as required by governing laws, codes, standards, and a site-specific engineering analysis.

The use of any particular pathway class is not specified. Unless a building code, NFPA *101*, the building owner, or the authority having jurisdiction requires a specific circuit class, the choice is a design decision. The selection should be based on a careful evaluation of the site-specific conditions and needs of the facility.

Establishing the performance objectives of the system in terms of life safety, property protection, and mission continuity is the first step in conducting the required evaluation. (Also see the commentary following 23.4.2.) This evaluation should be documented in the design narrative, design analysis, basis of design report, design brief, or other documentation prepared by the designer as part of the overall system design documentation and included with the documentation required by Section 10.20 and 7.3.9.

System Design Tip

Separate but related requirements concerning the reliability of the interconnecting signaling path are in Section 12.6 and involve monitoring the integrity of installation conductors. The concept of "T-tapping" is addressed in the commentary following Section A.12.6. Although T-tapping is permitted for some types of fire alarm circuits and may offer some wiring convenience, this allowance should not deter the selection of pathways with a higher level of fault tolerance when the evaluation determines the need for them. Note that the designer may also choose to prohibit T-tapping of circuits that might permit it, such as Class B SLCs.

System Design Tip

A transient voltage surge suppression device should be considered for protection of fire alarm circuits that extend outside the building envelope. At a minimum, the type and arrangement of the surge suppression should be recommended by the manufacturer of the FACU. The following excerpt from *NFPA 70®*, *National Electrical Code®* (*NEC®*), is provided regarding fire alarm circuits extending beyond one building.

***NFPA 70* (2017)**

760.32 Fire Alarm Circuits Extending Beyond One Building.

Non–power-limited fire alarm circuits and power limited fire alarm circuits that extend beyond one building and run outdoors shall meet the installation requirements of Parts II, III, and IV of Article 800 and shall meet the installation requirements of Part I of Article 300.

Informational Note: An example of a protective device suitable to provide protection is a device tested to the requirements of ANSI/UL 497B, *Protectors for Data Communications*.

23.4.3.2 When determining the integrity and reliability of the interconnecting signaling paths (circuits) installed within the protected premises, the following influences shall be considered:

(1) Transmission media used
(2) Length of the circuit conductors
(3) Total building area covered by, and the quantity of initiating devices and notification appliances connected to, a single circuit
(4) Effect of a fault in the fire alarm system that would hinder the performance objectives of the system that protects the occupants, mission, and property of the protected premises
(5) Nature of hazards present within the protected premises
(6) Functional requirements of the system necessary to provide the level of protection required for the system
(7) Size and nature of the population of the protected premises

FAQ What minimum factors must be considered in the evaluation required by 23.4.3.1?

System Design Tip

The evaluation must consider the factors listed in 23.4.3.2. This list is not all-inclusive, as the site-specific conditions may dictate that other factors should be considered as well. Designers should avoid installing all initiating devices on a single SLC in very large area facilities where all devices on the circuit could be affected by a single fault. See 23.6.1, SLC Zones, where a single fault on a pathway connected to the addressable devices is not permitted to cause the loss of devices in more than one zone.

23.4.3.3 Results of the evaluation required by 23.4.3.1 shall be included with the documentation required by 7.3.9.

The evaluation documentation should describe the rationale for selecting the performance class designation of each circuit.

23.5 Performance of Initiating Device Circuits (IDCs).

The assignment of class designations to initiating device circuits shall be based on their performance capabilities under abnormal (fault) conditions in accordance with the requirements for Class A or Class B pathways specified in Chapter 12.

23.6 Performance of Signaling Line Circuits (SLCs).

The assignment of class designations to signaling line circuits shall be based on their performance capabilities under abnormal (fault) conditions in accordance with the requirements for Class A, Class B, Class N, or Class X pathways specified in Chapter 12.

The Class N pathway designation addresses the use of modern network infrastructures for fire alarm systems and ECSs. Class N circuits (or pathways) more effectively address the interface and use of networks and are permitted under certain conditions. Chapter 23 contains requirements to ensure that the reliability of fire alarm systems is maintained, regardless of the pathways chosen. See 23.6.3.

23.6.1* SLC Zones. A single fault on a pathway connected to the addressable devices shall not cause the loss of the devices in more than one zone.

Subsection 23.6.1 introduces the concept of SLC zones and the requirements associated with not permitting a single fault on the SLC to cause the loss of devices in more than one zone. This requirement ensures an acceptable level of performance and reliability of SLCs to limit the potential catastrophic failure where short-circuit faults and open circuit faults can disable an entire SLC of addressable devices.

For example, if there were an addressable module with a number of nonaddressable detectors connected to it, where the open circuit fault occurs on the IDC would determine the extent of nondetector operation in the zone. A short on the IDC would result in an alarm. It is not recommended to have nonaddressable detectors on an addressable module covering more than one zone because the overlap would not ensure proper annunciation at the control panel.

A.23.6.1 The intent of 23.6.1 applies to both short-circuit faults and open-circuit faults.

Fire alarm and signaling system communications technologies have evolved to the point that SLCs are now the prevalent means of monitoring initiation devices, controlling output devices, and communicating between panels, annunciators, and controllers.

The extent of coverage of traditional IDCs is inherently limited based on the quantity of powered initiation devices or code limitations. Similarly, the extent and coverage of NACs also are limited by the power required to operate the devices. SLCs, unlike IDCs and NACs, have few limitations, and it is now common that a single SLC can monitor and control more than 250 devices. In addition, a single SLC can be the only pathway by which alarms are initiated, emergency control functions are controlled, and audible and visual notification appliances are actuated.

A total catastrophic failure of a fire alarm and life safety system due to a single open or short on an SLC can negate most, if not all, of this Code's requirements for specifying an acceptable minimum level of performance and reliability for the protection of life and property from fire.

Designers should carefully consider the potential that a single SLC short or open caused by a fire or inadvertent damage to the SLC could disable an entire SLC prior to the activation of an alarm condition along with the subsequent alarm signaling and emergency control functions.

With traditional IDCs and NACs, a single open, ground, or short fault on one circuit could not affect the performance of other IDCs, NACs, and emergency control circuits. As such, the occurrence of a single short or open could limit the extent of the failure to a particular zone or area.

One method for providing an acceptable level of performance and reliability of SLCs is to limit the potential catastrophic failure to one zone, in a way similar to how traditional IDCs and NACs have been and are now required to do.

A single zone could be designated in the following ways:

(1) By floor where an SLC would not span multiple floors
(2) By floor area, where a large floor would be split into multiple zones based on a maximum floor area size (e.g., 22,500 ft^2)
(3) By fire barrier or smoke barrier compartment boundaries, which an SLC would not cross
(4) By maximum length or circuit, where an SLC would not be longer than a predetermined length (e.g., 300 ft)

See the definition of zone (3.3.324) and Figure A.23.6.1(a) through Figure A.23.6.1(d) for additional clarification.

Figure A.23.6.1(a) depicts a Class B SLC with four zones. Wiring of more zones would require one isolator for each additional zone. The isolator can be integrated into the device or a separate component. If a single short or open occurs beyond the isolators, only one zone will be affected.

Figure A.23.6.1(b) depicts a Class A SLC with four zones. Wiring of more zones would require one isolator for each additional zone. The isolator can be integrated into the device or a separate component. If a single short or open occurs, only one zone will be affected. If a single open occurs, no devices will be affected.

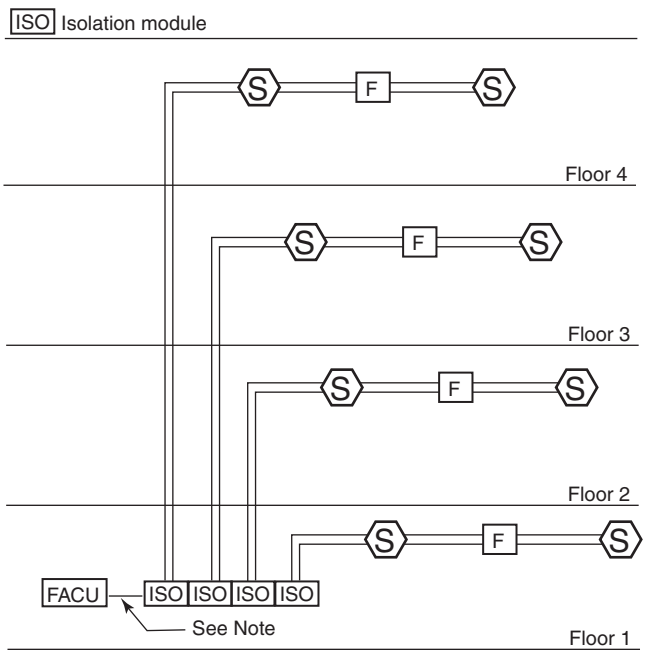

Note: Paragraph 23.6.1.3(2) allows an un-isolated circuit in metallic raceway or other equivalently protected method that does not exceed 3 ft (0.9 m) in length.

Δ ***FIGURE A.23.6.1(a)*** *Class B Isolation Method.*

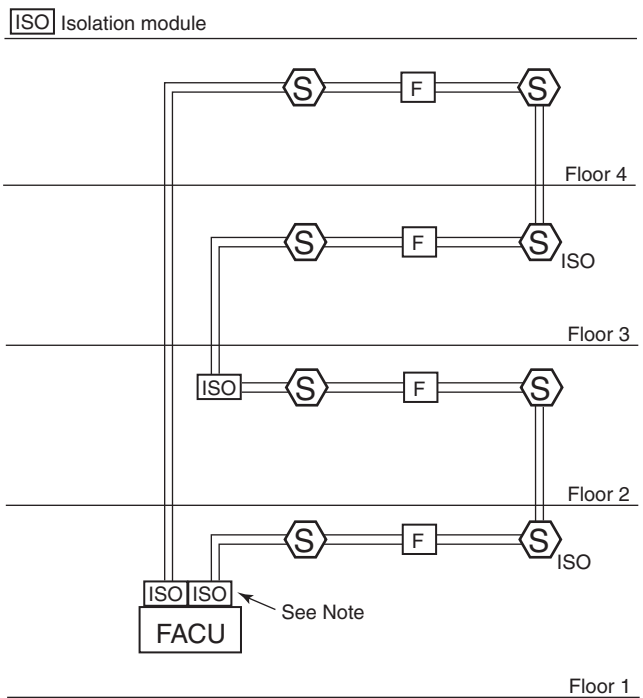

Note: The two isolation modules shown at the FACU are not required if the panel SLC controller is internally isolated from shorts between outgoing and return termination points.

Δ ***FIGURE A.23.6.1(b)*** *Class A Isolation Method.*

Figure A.23.6.1(c) depicts a hybrid Class A SLC loop with Class B SLC branches serving four zones that is designated as a Class B SLC. Wiring of more zones would require one isolator for each additional zone. The isolator can be integrated into the device or a separate component. If a single short occurs, only one zone will be affected. If a single open occurs, it might affect only one zone.

Figure A.23.6.1(d) depicts an incorrect Class B SLC configuration with four zones. If a single short or open occurs, one or more zones could be affected depending on the location of the single short.

The degree of loss due to a single fault on a pathway was historically limited to no more than 50 addressable devices. That limit attempted to solve the issue of continued operation of an SLC during a single fault condition. The quantity of devices lost is no longer limited to a maximum of 50 addressable devices based on a concept of an SLC zone rather than a quantity of addressable devices.

This requirement applies to SLCs and the addressable devices that are connected to that SLC; it does not apply to SLCs that interconnect the FACU and other equipment such as transponders, distributed amplifiers, and so forth.

The concept of SLC zoning to limit the quantity of addressable devices that would be lost from a single fault on an SLC involves breaking up an SLC into smaller pieces. SLC zoning could be thought of in terms of, but not limited to, the following:

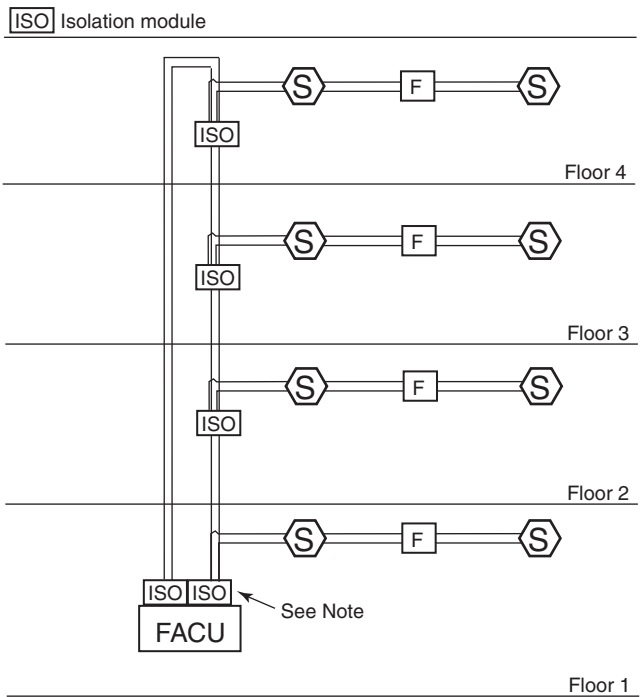

Note: The two isolation modules shown at the FACU are not required if the panel SLC controller is internally isolated from shorts between outgoing and return termination points.

Δ ***FIGURE A.23.6.1(c)*** *Hybrid Isolation Method.*

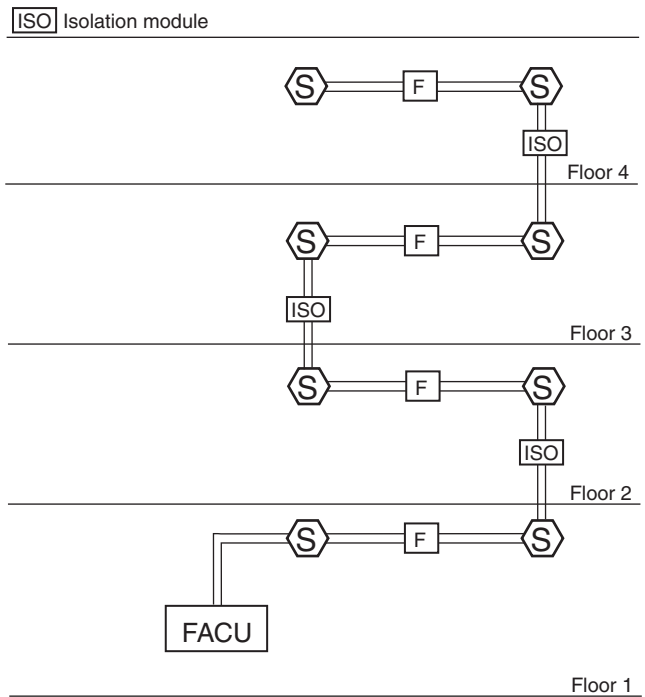

Δ ***FIGURE A.23.6.1(d)*** *Incorrect Use of Isolators on an SLC.*

- Zone by floor, where an SLC zone would not span multiple floors
- Zone by floor area, where a large floor area would be split into multiple SLC zones based on a maximum floor area size [e.g., 22,500 ft^2 (2090 m^2) in area]
- Zone by fire barrier or smoke barrier compartment boundaries, where an SLC zone would not cross a fire or smoke barrier compartment boundary
- Zone by maximum length of circuit, where an SLC zone would not be longer than a predetermined length [e.g., 300 ft (91 m)]

Figure A.23.6.1(a) through Figure A.23.6.1(d) provide clarification and examples of how SLC zoning can and cannot be accomplished.

***23.6.1.1** For the purpose of this section, each floor of the building shall be considered a separate zone.

23.6.1.2 For the purpose of this section, if a floor of the building is subdivided into multiple zones by fire or smoke barriers and the fire plan for the protected premises allows relocation of occupants from the zone of origin to another zone on the same floor, each zone on the floor shall be considered a separate zone.

23.6.1.3* The requirements in 23.6.1 shall not apply to the following:

(1) Circuits between enclosures containing transponders and control units regardless of the number of initiating devices, notification appliances, or control relays that might be connected to those control units

(2) Circuits connecting short-circuit fault isolation modules to enclosures containing transponders and control units where the conductors are installed in metallic raceway or equivalently protected against mechanical injury and where the circuit does not exceed 3 ft (0.9 m) in length

(3)* Alterations or modifications made to an existing SLC not required to comply with 23.6.1 when originally installed

Item (3) was added to address the expansion, alteration, or modifications to existing SLCs. Existing SLCs not originally required to comply with 23.6.1 are not required to be upgraded to comply with these requirements.

A.23.6.1.3 The intent is to clarify that the requirement identified in 23.6.1 applies only to SLCs that connect to addressable devices and not to SLCs that interconnect fire alarm control units (FACU) or transponders.

N **A.23.6.1.3(3)** In many cases, existing systems are partially modified with addressable devices being added as a part of the scope of work. In this case the SLC might not have been installed in a manner that could be easily modified to accommodate isolation modules and/or keep a single SLC loop confined to a single zone. This condition makes it clear that the requirements of SLC zones do not apply to existing systems that were not required to meet the zoning requirements of 23.6.1 when originally installed.

23.6.1.4 The loss of more than one zone shall be permitted on a documented performance-based design approach.

23.6.1.5* Performance-based designs submitted to the authority having jurisdiction for review and approval shall include documentation, in an approved format, of each performance objective and applicable scenario, together with technical substantiation used in establishing the proposed zone performance.

A.23.6.1.5 Possible scenarios in which a designer might choose to permit loss of more than one zone include a multistory building with a small floor plan footprint where a limited number of addressable devices are located on the floor (e.g., one manual fire alarm box and two automatic fire detection devices). In this scenario, the designer might choose to include multiple floors of devices on the same signaling line circuit because the loss of such devices due to a single SLC short or open would disable a limited number of devices.

Another scenario could include buildings with a small vestibule at the top of a stair that exits onto the roof of a building. The vestibule might contain one manual fire alarm box and one or two automatic fire detection devices that could be connected to the signaling line circuit on the floor below and considered the same zone.

Designers providing documents for upgrades to an existing building where the control units and all fire alarm system devices are being replaced but some portion of the existing circuits are being reused might, because of constructability reasons, opt for combining zones and the associated risk of the loss of those devices due to a single SLC short or open.

The intent of 23.6.1.5 is not to impose an unnecessary burden on building owners with existing systems undergoing renovations, upgrades, or replacements. In these scenarios as well as others, the designer would be required to provide a documented, performance-based design approach to justify why the loss of more than one zone is acceptable. Documentation must be composed in accordance with 23.6.2.4 and be submitted in accordance with 7.3.7.5.

System Design Tip

The designer is permitted to submit a performance-based design approach to provide technical justification for more than one SLC zone of addressable devices to be lost under a single fault condition. This is similar to where the Code identifies that the system designer is responsible for conducting an analysis to determine the level of pathway classification (see 7.3.9.1 and 23.4.3.1).

23.6.2* Class N Devices. Unless permitted in 23.6.2.1 or 23.6.2.2, no area or zone shall be served solely by a single device where Class N pathways are deployed, such that a single device failure resulting from a multiple ground-fault pathway failure would render an area or zone incapable of initiating input signals or receiving output signals.

N **A.23.6.2** Class N systems should mitigate risk that could be present when a zone or area is serviced by a single Class N device. However, 23.6.2 is not intended to automatically require the installation of twice as many (or more) Class N devices as compared to a design based on Class A, B, or X pathways. The risks inherent to Class N are different from the risks inherent to Class A, B, or X.

Class A and B pathways are permitted to lose devices in a zone (*see Section 23.6*) upon a multiple ground-fault pathway failure. Class A and B pathways require a single ground to be annunciated as a trouble signal. The requirement is to annunciate the first ground fault and alert the user so that the ground fault can be addressed before a possible second ground fault occurs. Note that a second ground fault is also annunciated at the systems operator interface because communication is lost.

Class X pathways are not permitted to lose devices in a zone (*see Section 23.6*) upon a multiple ground-fault pathway failure that results in a short circuit across the pathway. Class X pathways require a single ground to be annunciated as a trouble signal. The requirement is to annunciate the first ground fault and alert the user so that the ground fault can be addressed before a possible second ground fault occurs.

By contrast, Class N is not required to report a trouble condition at the occurrence of the first ground fault because it limits the loss to a single device if another ground occurs. A second ground fault in the Class N pathway, like Class A and B pathways, annunciates a trouble condition at the systems operator interface because communication is lost.

In summary, the potential risk of a loss of fire alarm function in an area must be considered in Class N network design. Multiple ground faults might cause such a loss in an area, especially after no one was alerted of a trouble condition at the first ground fault.

The term "device" in this context should be understood in conjunction with the definition of Device (Class N) 3.3.71 and the associated annex material A.3.3.71. An area is a separated space within a zone where initiating devices or notification appliances are required. Examples include an office, conference rooms, or temporary partitioned banquet rooms where alarm notification is required. Factors to consider when determining the need for multiple Class N devices within an area or zone include the following: whether the space is acoustically and/or visually isolated; specific audible and visual indication of trouble to the occupants in that area for a related ground-fault pathway failure of any device/appliance in that area; the pathways to devices in the area are not susceptible to ground faults such as fiber or wireless pathways.

Also, multiple devices are not required when devices/appliances are connected by redundant pathways. For example, consider the dual port devices deployed as per A.12.3.6(5). For example, the failure of a sole Class N initiating device might delay or prevent the timely initiation of an alarm.

Depending on the facility and the risks for that occupancy, areas serviced by single devices, without redundant pathways, that are susceptible to ground faults should be established by the system designer and approved by the authority having jurisdiction.

Class N circuits are not electrically supervised in the same way as traditional fire alarm circuits. They have no ability to detect ground faults. An open circuit could result in failure to transmit data, which would result in a trouble signal. For these reasons, there are unique requirements that essentially make them equal in reliability to traditional fire alarm circuits. Class N circuits are not required to annunciate a trouble signal for a single ground or open. Rather, they must confirm data transmission. Failure to transmit data because both primary and redundant pathways are compromised must result in a trouble signal. Class N circuits must have a redundant pathway whenever that pathway serves more than one device.

Generally, Class N pathways between control equipment and data forwarding equipment must be redundant. The risk analysis must address the likelihood of circuit failure when devices use a single Class N pathway. See 23.6.3.8. Copper or fiber-optic pathways can be compromised by open circuits, but optical fiber is generally not compromised by moisture (ground faults).

23.6.2.1 Where a risk analysis shows that only one device is required and where acceptable to the authority having jurisdiction, the requirements of 23.6.2 shall not apply.

Areas where a loss of communications might be acceptable include small offices or areas where other means of communications exist, or where other devices and appliances may provide limited coverage. The authority having jurisdiction must approve any arrangements where a single Class N pathway is employed.

N **23.6.2.2** Multiple devices shall not be required in areas served by pathways not susceptible to ground faults, such as fiber or wireless pathways.

Optical fiber is not susceptible to ground faults because it does not operate with electrical potential on the conductors. While ground faults are not a risk associated with optical fiber, many other risks should be addressed. Other faults will include open circuits that result in a loss of communications. The risk analysis must include the likelihood of other failure modes, such as unintentional or intentional tampering, fires, earthquakes, weather events, and so forth. See 23.6.3.8.

N **23.6.2.3*** Where a device as referenced by 23.6.2 is serviced by only a single pathway, it shall terminate that pathway with no ability to connect additional endpoint devices to the pathway.

N **A.23.6.2.3** This requirement is to ensure that devices without redundant pathways are not used to terminate additional equipment such that a loss of the pathway would result in more than one device failure to communicate and operate as intended. This stipulation does not apply to dual port devices as described in A.12.3.6(5), because these devices support redundant pathways. A dual port device that is used to daisy-chain additional devices without a redundant pathway would be prohibited.

The term "device" in this context should be understood in conjunction with the definition of Device (Class N) 3.3.71 and the associated annex material A.3.3.71.

A network-based audio amplifier is an example of an addressable device that can receive a digital audio input from the Class N pathway and then provide a notification appliance circuit (NAC) output with Class A, B, or X pathways. Other endpoint devices can similarly provide alternate class pathways for visual notification appliances (strobes) (NACs) or initiating devices (IDCs). From the perspective of the Class N pathway, communications terminates at this endpoint device. However, since these types of endpoints can support multiple notification appliance devices or initiating devices, Class N path segments are still subject to the redundant pathway requirement unless protected in an enclosure or raceway less than 20 ft (6 m) in length. *[See Figure A.12.3.6(1)(c).]*

Loss of coverage to an area by a single Class N device is not permitted by 23.6.2, unless it is approved by the authority having jurisdiction or where the circuit is not susceptible to ground faults. Paragraph 23.6.2.3 is to prevent a Class N pathway from being extended so that more than one Class N device is connected to a single Class N pathway, resulting in a violation of 23.6.2. The Class N device must not have dual ports, except where it uses a redundant pathway.

A Class N device is defined in 3.3.71 as follows:

"A supervised component of a life safety system that communicates with other components of life safety systems and that collects environmental data or performs specific input or output functions necessary to the operation of the life safety system."

A Class N device may be a sensor, such as a smoke detector; a notification appliance, such as a loudspeaker; or an annunciator. There are cases where a single Class N pathway is acceptable, such as that described in 12.6.9.

Δ **23.6.2.4*** A single fault on a Class N pathway shall not cause the loss of more than one addressable device.

N **A.23.6.2.4** This clause is a consequence of the definition of Class N, which permits a single pathway to be used when only one device is served. *[See 12.3.6(1).]* This exception to the requirement of redundant pathways allows for the loss of operational capability to a single device. Unplugging, grounding, or cutting any single Ethernet cable or conductor cannot affect more than one Ethernet device and cannot affect additional devices, Ethernet or otherwise, in the system.

All shared pathways defined as Class N should be documented, including all equipment connected to the shared pathways, interconnecting methods identifying required redundant communication pathways, end points, techniques used for proper supervision, and possible risk due to shared pathway failures. As an example, for wired Ethernet, the designer might want to use cabling techniques identified in standards such as ISO/IEC 14763-3, *Informational technology — Implementation and operation of customer premises cabling — Part 3: Testing of optical fibre cabling*, to satisfy the requirements of the authority having jurisdiction.

This subsection aligns with the requirement for an area to be covered by single Class N pathway. It reiterates the requirements in 23.6.2.

Δ **23.6.3 Class N Shared Pathways.** Class N pathways shall be required to use shared pathway Level 3 as specified in 12.5.4 except as permitted by 23.6.3.2.

The requirements of this subsection were developed to ensure that the network operational reliability is maintained. Whenever Class N technology is planned to be used, the personnel involved in maintaining the network must be aware of the Code requirements affecting the network when it is used for a fire alarm system or ECS. Users of the Code should also be aware that a shared network creates a combination system. See 23.8.4.

Δ **23.6.3.1 Accessibility.** Class N pathways shall not be accessible to the general public or building occupants for any purpose other than specified in the network design analysis, maintenance, and deployment plans.

Ethernet systems are modified frequently because technology changes frequently. Class N circuits look and act very much like Ethernet circuits and may use the same type of cabling. For this reason, access must be limited to qualified personnel to prevent unintentional or intentional tampering.

23.6.3.2 Level 1 and Level 2. Shared pathways Levels 1 and 2 shall be permitted subject to approval of the authority having jurisdiction, based on documentation of the deployment, change control, maintenance plans, management organization, network design analysis, and a risk analysis as identified in 23.6.3.3 through 23.6.3.8.

23.6.3.3* Deployment Plan.

N **A.23.6.3.3** All shared pathways defined as Class N should be documented, including all equipment connected to the shared pathways, interconnecting methods identifying required redundant communication pathways, end points, techniques used for proper supervision, and possible risk due to shared pathway failures. As an example, for wired Ethernet, the designer might want to use cabling techniques identified in standards such as ISO/IEC 14763-3, *Informational technology — Implementation and operation of customer premises cabling — Part 3: Testing of optical fibre cabling*, to satisfy the requirements of the authority having jurisdiction.

23.6.3.3.1 All equipment connected to shared pathways shall be documented in the deployment plan.

23.6.3.3.1.1 The documentation shall include manufacturer, model, listings, and intended purpose and reason for inclusion on the shared network.

23.6.3.3.1.2* The deployment plan shall identify how and where each piece of equipment is connected.

N **A.23.6.3.3.1.2** Cable installations should be tested with appropriate field test measurement equipment in accordance with applicable standards such as TIA 526, *Standard Test Procedures for Fiber Optic Systems*, or other standards acceptable to the authority having jurisdiction. For example, testing requirements for Category 5 or higher balanced twisted-pair cabling should include the following:

(1) Wire map (e.g., continuity, pairing)
(2) Length
(3) Insertion loss
(4) NEXT loss
(5) ACR-F (formerly called *ELFEXT*)
(6) Propagation delay and delay skew
(7) Return loss
(8) Power sum near-end crosstalk (PSNEXT) loss
(9) PSACR-F (formerly called *PSELFEXT*)

Testing requirements for optical fiber cabling should include the following:

(1) Attenuation
(2) Optical bandwidth
(3) Length

Not only is it important to develop a deployment plan to document all equipment connected to the Class N shared network, it is also extremely important to perform testing of the network. TIA-526, *Standard Test Procedures for Fiber Optic Systems*, provides uniform test procedures for testing all or part of fiber-optic systems or subsystems intended for optical communications and data transmission use. In testing an installed system, the testing organization will usually have little or no control over the environment that each component of the system will experience. Consequently, when the procedures covered by this document and its addenda are used for acceptance testing of a particular system, the results will be evaluated with the understanding that all system components might not be at the standard conditions at which they were originally tested and accepted.

Copper cables, such as Category 5 or Category 6, can be tested using a time domain reflectometer (TDR). Optical fiber cables are generally tested using an optical time domain reflectometer (OTDR). Both of these instruments can provide the recommended test data to ensure the cables are acceptable and meet installation criteria and manufacturer's requirements.

23.6.3.3.2* All connection ports, used or spare, where any unauthorized or unintended equipment could be added to the shared network, shall be identified as for use only by equipment consistent with the deployment plan.

N **A.23.6.3.3.2** All ports need to be properly identified and labeled. For example, Class N switches should be permanently labeled "LIFE SAFETY EQUIPMENT – NO UNAUTHORIZED USE," or plugs should be used to prevent access.

Ethernet and Class N networks are the same or similar equipment. Unqualified or unauthorized personnel could inadvertently disable part or all of a Class N life safety network by changing a switch position or connecting a cable in an incorrect port. Since it is unknown who may be inspecting, testing, or maintaining shared networks, it is important to label all connection ports, whether they are used or spare, to identify clearly that the Class N network is being used specifically for life safety systems.

It is necessary to prevent unauthorized tampering with the life safety (Class N) network. The deployment plan must address the methods of preventing tampering, which may include signs and plugs. In some cases, a physical barrier, such as a wall or cage, may be warranted.

N **23.6.3.3.3 Equipment Location.**

N **23.6.3.3.3.1** The requirements of 23.6.3.3.3.2 through 23.6.3.3.3.4 shall apply to all equipment rooms, equipment closets, telecommunication rooms, telecommunication enclosures, or the like, for which both Class N life safety network infrastructure and non–life safety network equipment resides.

N **23.6.3.3.3.2*** Equipment rooms or enclosures shall be permitted to contain both Class N life safety networking cable, equipment, and associated infrastructure provided the deployment satisfies 23.6.3.3.3.3 through 23.6.3.3.3.4.

Class N and Ethernet networks may use the same type of equipment and cabling. The deployment plan must address how the Class N life safety network and the Ethernet network are to be shared and/or separated to avoid interference. See 23.6.3.3.2 and related commentary.

N **A.23.6.3.3.3.2** Life safety Class N network cabling, equipment, and infrastructure might include (but is not limited to) Ethernet switches, media converters, uninterruptible power supplies, separate life safety network dedicated branch circuit power, cabling cross connects, and both copper and fiber cabling.

N **23.6.3.3.3.3** Class N life safety network cabling, equipment, and infrastructure shall be clearly segregated and identified as "Life Safety Network."

Since it is unknown who may be inspecting, testing, or maintaining shared networks in equipment rooms and other areas, it is important to make sure that all shared network cabling is properly separated and labeled so that others know which cables are being used for life safety systems.

N **23.6.3.3.3.4** Equipment rooms or enclosures shall be accessible to only authorized personnel via a locked access or via an enclosure requiring the use of tools to open, as acceptable by the authority having jurisdiction.

Paragraphs 26.3.3.3.1 through 26.3.3.3.4 ensure that the Class N life safety network is not compromised where the equipment resides in the same area or room as the non-life safety network equipment. Since it is unknown who may be inspecting, testing, or maintaining shared networks and accessing these equipment rooms or enclosures, it is important to make sure that the rooms and/or equipment cabinets

System Design Tip

are secured. This will help ensure that the Class N networks specific to those supporting life safety systems are only accessible by authorized personnel.

Designers are reminded to work with architects to ensure there is adequate space for the life safety network equipment. Locating the life safety equipment in storage areas or other rooms accessible to the public will require additional administrative measures.

23.6.3.4 Change Control Plan. Configuration upgrades and updates shall be governed by a change control plan that determines the policy and procedure of the change and ensures that all documentation is correspondingly updated.

23.6.3.5 Management Organization.

Δ **23.6.3.5.1*** An organization shall be established and maintained to manage the life safety network and shall perform the following:

(1) Contain members appropriately certified by each manufacturer of the equipment and devices deployed on shared pathways to maintain such a network
(2) Service and maintain all shared Class N pathways
(3) Maintain the deployment and shared pathways plan for the lifetime of the shared pathways

Copies of the deployment and shared pathways plan should be kept at the protected premises with all other system documentation, as required by Chapter 7.

N **A.23.6.3.5.1** Regular inspection, testing, and maintenance are conducted on life safety systems. In traditional systems a single certified entity was typically capable of servicing the fire alarm control unit, transport equipment, and/or wiring associated with it. Class N systems will often use modern network infrastructure that might fall outside the expertise of the life safety–certified entity, or other building systems could share the infrastructure used to create the Class N network. The property or building or system owner or the owner's designated representative has responsibility to maintain a list of certified entities that are capable of servicing and maintaining the life safety system and the Class N network. This is what *NFPA 72* refers to as a *management organization*. For example, if the Class N network runs through Ethernet switches and routers, the premises IT infrastructure should be maintained by service personnel as referenced in 10.5.3.3.

Fire alarm technicians may or may not be qualified to install and service Class N life safety network equipment. Similarly, information technology (IT) technicians may not be qualified to install and service Class N life safety network equipment. All technical support for the Class N life safety network must be provided by qualified and competent personnel. See 10.5.3 and 10.5.3.3.

The deployment plan should identify the management organization, that organization's role in the maintenance of the life safety network, and any special certifications that might be required for service personnel. In most cases, the equipment manufacturer may have special requirements for installers/maintainers.

23.6.3.5.2* Other service personnel, even when certified to service a specific system (i.e., fire alarm or MNS), shall be authorized and managed by this organization to ensure any outages of any system are planned, managed, and documented and appropriate steps are taken during outages to provide alternate protection of life and property.

N **A.23.6.3.5.2** During inspection, testing, or maintenance it could be necessary to temporarily disable or test part of a life safety system. The *management organization* is responsible to ensure that other affected entities are notified and action plans put in place to ensure appropriate life safety coverage is maintained and appropriate notification is given to other entities such as the fire or security monitoring services.

Having a single point of contact (management organization) helps ensure that all systems operate as intended. The management organization must communicate effectively with all parties when planned changes, outages, or tests are conducted. Alternate protection may include fire watches or alternate means of communication to alert occupants of a life threatening condition. Failure to plan effectively and communicate with all affected parties may result in loss of life or property.

23.6.3.6 Network Design Analysis.

23.6.3.6.1* The analysis shall be performed to determine and document communications capability as follows:

(1) Calculation of minimum required bandwidth such that all life safety systems can be guaranteed to operate simultaneously and within required time limits
(2) Total bandwidth provided by the network
(3) Future bandwidth requirements
(4) Method of providing and maintaining the prioritization of life safety traffic over non–life safety traffic

N **A.23.6.3.6.1** When shared pathway Level 1 or Level 2 is employed, care should be taken to ensure that the life safety system(s) traffic has priority over other systems sharing the Class N network to maintain the required bandwidth. Other systems might have unspecified or unpredictable bandwidth usage (such as a manually controlled security camera); therefore, the analysis should specify the method(s) used to ensure the required life safety bandwidth is maintained under all circumstances. The network design analysis should show this and be signed by the property or building or system owner or the owner's designated representative responsible for the design for the authority having jurisdiction to review.

System Design Tip

The network designer must analyze the non-life safety network capability and the Class N life safety network requirements to establish the needs for the shared system. There must be adequate bandwidth to process all life safety signals, which have priority over all other signals. If network changes are planned, the new network must be designed so it is capable of transmitting all life safety signals as priorities. For example, a building addition may create more demand on shared routers and switches, resulting in a reduced bandwidth capability. All analyses must be documented and kept with system documentation, as required by Chapter 7.

23.6.3.6.2* The analysis shall determine and document the power distribution capability as follows:

(1) The methods provided to maintain power to all shared pathway equipment
(2) A calculation of power requirements of all connected equipment
(3) Secondary power capacities provided to maintain all life safety equipment with minimum operational capacity in accordance with 10.6.7.2.1.2
(4) Methods to disengage any non–life safety equipment in the event of emergency operation if required to support the minimum operational capacity requirements

These requirements provide for the continued reliability of these pathways. Primary and secondary power requirements for shared pathway equipment are essentially the same as for fire alarm equipment. See 10.6.7.2.1.2.

N **A.23.6.3.6.2** Primary and backup power should meet the requirements of *NFPA 72*. Life safety equipment and their connected equipment (Class N transport devices when not powered by the FACU) should utilize dedicated branch circuits for primary power. This is to

prevent other loads from tripping a circuit breaker connected to the FACU and to prevent inadvertent disconnecting of primary power to the FACU.

The branch circuit disconnecting means (circuit breakers) should be clearly labeled and made only accessible to authorized personnel.

FACUs are required to have a secondary power source that must last for 24 hours of standby (nonalarm) power followed by either 5 (non-voice systems) or 15 (voice systems) minutes of alarm power. This is typically accomplished by backup batteries or by an emergency generator. All transport equipment not powered by the FACU has the same requirement. The analysis should document the calculation of all power requirements (standby and alarm) of the FACU and transport equipment to ensure that the system can meet this requirement. To meet this requirement, non–life safety systems could be disconnected from the secondary power source.

Primary and secondary power requirements for shared pathway equipment are essentially the same as for fire alarm equipment. See 10.6.7.2.1.2.

23.6.3.7 Maintenance Plan.

A maintenance plan ensures that changes and updates to the network do not affect the fire alarm system's performance.

23.6.3.7.1* The maintenance plan shall identify policy and procedures to monitor, maintain, test, and control change of the shared pathways.

N **A.23.6.3.7.1** Maintenance is a critical aspect of fire alarm systems, and a plan needs to be in place to empower continued operation of the fire alarm system. Shared Class N pathways present a unique concern in that non–fire alarm technicians could perform maintenance or changes to the Class N equipment or pathways. For example, routine updates to software in the routers and switches or upgrades to address new non–fire alarm needs. This could result in outages of the portions of the fire alarm system or affect the subsequent operation of the fire alarm system. It is crucial that the maintenance plan address policy and procedure to monitor, maintain, and test per Chapter 14 and control change of the shared pathways to contribute to continued intended operation of the fire alarm system. For example, 14.4.2.5 states that changes to system executive software require a 10 percent functional test of the system, including typical network infrastructure such as routers and switches that now need consideration as part of the life safety network maintenance plan.

It is essential that competent and qualified personnel are involved with Class N life safety network maintenance. See 10.5.3.3. Not all fire alarm service personnel are qualified to maintain or test Class N or Ethernet circuits. Similarly, not all IT personnel are qualified to inspect, test, and maintain fire alarm or ECSs. Chapter 14 contains many requirements for initial acceptance and reacceptance testing. Test plans must be developed to identify the extent of tests when changes are made to life safety network equipment. Seemingly innocuous changes to software or hardware may trigger extensive testing. Failure to properly test can, and often does, result in system failures.

23.6.3.7.2* Written procedures shall be presented in maintenance plans to govern the following:

(1) Physical access to all parts of the Class N network equipment (i.e., switches, ports, server, controllers, devices, or components)
(2) Electronic access to all parts of the Class N network (i.e., passwords, addresses)
(3)* Service outage impairment process with notices of impairment and contingency plans for affected systems

(4) Upgrade procedures
(5) Change control procedures, with consideration given to require an updated risk analysis if necessary
(6) Prioritization and/or segregation configuration information for life safety traffic
(7) Maintenance and testing plans to ensure the minimum operational capacity with respect to secondary power is maintained
(8) Other service, maintenance, or reconfiguration plans for any connected equipment

N **A.23.6.3.7.2** Written procedures should address who can access the Class N network; how the procedures will be implemented; the level of retesting of the system needed when software updates to the Class N network infrastructure such as routers and switches are made; and the effect of changes on system response times to ensure required time limits are maintained.

A maintenance plan must address these issues and must be complete. Shared life safety networks can be complicated and involve several disciplines. Having well-written maintenance procedures will help ensure that the system is maintained properly. Written procedures should address who can access the Class N network and how the procedures will be implemented; the level of retesting needed when software updates to the Class N network infrastructure such as routers and switches are made; and the effect of changes on system response times to ensure required time limits are maintained.

A list of contacts for each maintenance organization along with their responsibilities will be needed. Additionally, a list of product manufacturers and contact information will help ensure that product updates and software upgrades are performed when needed.

A.23.6.3.7.2(3) The planned impairment process is used to control change in the system and inform stakeholders. Any activities that can affect the performance of the network or impact conclusions of a risk analysis should be presented to the organization referred to in 23.6.3.5 for approval. The organization should have a name (e.g., Life Safety Network Management Group). All stakeholders who could be affected by network outages should have representation in the organization.

A committee made up of members of the organization should meet on a regular basis and report to the organization. All planned impairments should have 7 days' notice. An emergency impairment (one with less than 7 days' notice) should meet very stringent standards for urgency. Outages and repair operations are dealt with on a case by case basis with the fire marshal's office, and the Department of Public Safety is included based on the operational impact.

All proposed changes and outages are to be presented to the organization for authorization, scheduling, and coordination. Once a change has been authorized and scheduled, an impairment notification is issued notifying all affected users. If specific mitigation actions, such as fire watch, are required, they are to be included in the impairment notification.

Impairment notifications are issued through the fire marshal's office, the Department of Public Safety, the Power Outages Group, or other groups depending on the systems affected.

A "login banner" is a programmable option for network switches and routers. This banner is the first thing that comes up on the screen when you log into the equipment. Where practical, network equipment used in life safety systems should have a login banner to notify service personnel that the network is a part of an active life safety system and any impairment should be coordinated with the named organization.

23.6.3.8* Network Risk Analysis for Class N.

The Code encourages fire alarm networks to be dedicated (Shared Pathway Level 3, see 23.6.3). Networks are permitted to be shared with other building systems, but sharing requires careful analysis, installation, and maintenance. Fire alarm systems are not permitted to be connected on general building networks; installation must comply with the requirements of the Code.

N **A.23.6.3.8** Although this section outlines some specific criteria and/or limitations, each application should be based on recognized performance-based design practices and the emergency response plan developed for the specific facility. Here are the general categories of questions that might be presented to the stakeholders responsible for Class N shared network design decisions. The actual questions for each project must be tailored to the area, the building, the campus, and the culture of the user organization and the nature of how the network is being shared. The requirements for the life safety network should be evaluated with respect to the types of emergency events and emergency response plan. The potential impact of these events upon the life safety network also should be evaluated.

(1) What types of emergency events could affect the life safety network (e.g., fire, security, safety, health, environmental, geological, meteorological, utility service disruption, or other types of events)?
(2) What is the anticipated or expected severity of the emergency events, that is, how will they impact the facility and its functions? Are they expected to be extreme, severe, and so forth?
(3) What is the certainty of the emergency event, that is, is it happening now, is it very likely to occur, is it likely to occur, is it possible that it will occur in the future, is it unlikely to occur, or is its occurrence unknown?
(4) Natural hazards: What are the network risks to the implementation of the emergency response plan in response to natural hazard events? What are the types of emergency events that could be predicted to result from natural hazard events? For example, if flooding is possible in the surrounding area, how would a flood affect the life safety network while operating in its normal, monitored state? What would happen if a fire alarm occurred during a flood? How likely is it that a flood could damage the life safety network? What related events might impact the life safety network and equipment, such as a power outage?
(5) Human caused: What are the network risks to the implementation of the emergency response plan in response to accidents or intentional acts? What are the types of emergency events that could be predicted from both within and outside the protected premises? What type of related damage might be expected to impact the life safety network and equipment, such as explosions?
(6) Technological caused: What are the network risks to the implementation of the emergency response plan in response to technologically caused events or failures and the types of emergency events that could be predicted to result from a technologically caused event both within and outside the protected premises. What type of related damage might be expected to impact the life safety network and equipment, such as a network attack?
(7) Network maintenance risks: What are the network risks to the implementation of the emergency response plan in response to a degradation of network software performance (e.g., an unintended degradation of performance due to software updates) or a degradation of physical network performance or implementation (e.g., physical damage, system modifications)? What types of emergency events could be predicted to result from a degradation of the life safety network? What type of related impairments might be expected to impact the components of the life safety network and equipment, such as environmental controls?

The questions suggested in items (1) through (7) are offered for consideration, and not all of them might be appropriate for every life safety network installation.

This subsection outlines some specific criteria and/or limitations. Each application should be based on recognized performance-based design practices and the emergency response plan developed for the specific facility. A well-thought-out and written risk analysis cannot be developed in a vacuum.

System Design Tip

The creator of this risk analysis must meet with all stakeholders to determine the risks and how to mitigate them. Ideally, the stakeholders will include the following personnel:

- Fire protection system designers/engineers
- Security system designers
- IT designers and installers
- Building owner
- Insurance interests
- Manufacturer's representative (fire, security, IT)
- Contractor's representative
- Authority having jurisdiction

Each type of risk must be evaluated and weighed against the possibility of occurrence. Not all risks will apply to every project, but the developer must be prepared to address them.

N **23.6.3.8.1** Each application of a Class N deployment shall be specific to the nature and anticipated risks of each facility for which it is designed.

N **23.6.3.8.2** The risk analysis shall address both fire and non-fire emergencies when determining risk tolerances for the survivability of the network and the systems and devices it serves.

Not every facility has the same risks. For example, a nuclear power plant has very different risks than an elementary school. A carefully crafted risk analysis will address the individual needs of the project.

N **23.6.3.8.3** The detail and complexity of the risk analysis shall be commensurate with the complexity of the facility for which the network is to be installed.

Every facility will have different risks and tolerances. The risk tolerance for fires in a refinery is far different from risk tolerance for fires in a small office building.

N **23.6.3.8.4** The risk analysis shall be permitted to be limited in scope to address the requirements of an existing emergency response plan.

N **23.6.3.8.5** The risk analysis shall consider characteristics of the buildings, areas, spaces, campuses or regions, equipment, and operations that are not inherent in the design specifications.

N **23.6.3.8.6** Those elements that are not inherent in the design specifications, but that affect occupant behavior or the rate of hazard development, shall be explicitly identified and included in the risk analysis.

N **23.6.3.8.7** The risk analysis shall consider the following types of potential events, which are not all-inclusive but reflect the general categories that shall be considered in the risk analysis:

(1) Natural hazards — geological events
(2) Natural hazards — meteorological events
(3) Human caused — accidental events
(4) Human caused — intentional events
(5) Technological — caused events

N **23.6.3.8.8** All other identified risks as required by the authority having jurisdiction shall be discussed and addressed in the analysis and maintenance plans.

The authority having jurisdiction can be an excellent source of information and must be included in the development of the risk analysis. A thorough and complete analysis must include input from the authority having jurisdiction. Also see the commentary following A.23.6.3.8.

23.7 Performance of Notification Appliance Circuits (NACs).

The assignment of class designations to notification appliance circuits shall be based on their performance capabilities under abnormal (fault) conditions in accordance with the requirements for Class A, Class B, or Class X pathways specified in Chapter 12.

23.8 System Requirements.

23.8.1 General.

23.8.1.1* Presignal Feature.

A.23.8.1.1 A system provided with an alarm verification feature as permitted by 23.8.5.4.1 is not considered a presignal system, since the delay in the signal produced is 60 seconds or less and requires no human intervention.

23.8.1.1.1 Systems that have a presignal feature complying with 23.8.1.1 shall be permitted if approved by the authority having jurisdiction.

23.8.1.1.2 A presignal feature shall meet the following conditions:

(1) The initial fire alarm signals sound only in department offices, control rooms, fire brigade stations, or other constantly attended central locations.
(2) Where there is a connection to a remote location, the transmission of the fire alarm signal to the supervising station actuates upon the initial alarm signal.
(3) Subsequent system operation is by either of the following means:
    (a) Human action that actuates the general fire alarm
    (b) A feature that allows the control equipment to delay the general alarm by more than 1 minute after the start of the alarm processing

The remote location referred to in 23.8.1.1.2(2) is a supervising station or other location to which signals are transmitted. Presignal systems usually rely on human intervention to actuate the general alarm. Building or occupancy codes should be consulted to determine if the presignal feature is permitted; see excerpt below from NFPA *101*. Specific permission of the authority having jurisdiction is required to use the presignal feature because it can delay the general alarm more than 1 minute.

A maximum time delay with regard to resetting the system or actuating the general alarm is not stated. [In contrast, positive alarm sequence (PAS) fire alarm systems only permit a maximum of 180 seconds of delay after the initial 15-second delay to "acknowledge" the alarm signal on the control unit]. Delaying the operation of the fire alarm system during a fire can have disastrous consequences. The presignal feature should be used in special situations only, where well-trained operators are on duty at all times. In many cases where a presignal feature is used, an immediate response to the fire area by a well-trained, fully equipped emergency response team is also provided. The following excerpt from NFPA *101* is provided for reference. (Note: the presignal feature is referred to as "presignal system" in NFPA *101*.)

NFPA *101* (2018)

9.6.3.3 Where permitted by Chapters 11 through 43, a presignal system shall be permitted where the initial fire alarm signal is automatically transmitted without delay to a municipal fire department, to a fire brigade (if provided), and to an on-site staff person trained to respond to a fire emergency.

NFPA *101* permits a presignal system to be installed in certain occupancies and permits the delay of automatic notification to occupants if the system automatically transmits the alarm to fire department personnel, to on-site fire brigade personnel, and to on-site personnel trained to investigate and respond. In addition, 23.8.1.1.1 requires specific permission of the authority having jurisdiction to use the presignal feature.

If a presignal system is used in a building, combining the built-in delay with another programmed fire alarm system initiating device delay is not advisable. Other delays include the alarm verification feature (see 23.8.5.4.1), the PAS feature (see 23.8.1.2), or "cross-zoning" (the operation of multiple automatic detectors to initiate the alarm response, see 23.8.5.4.3). Multiple or compounded delays must not be programmed into the system, thus further delaying occupant notification and fire department response.

23.8.1.2 Positive Alarm Sequence.

The PAS system provides a timed delay of a general alarm signal in a building and at a supervising station. This delay gives a trained responder up to 3 minutes (i.e., 180 seconds) to investigate the cause of an alarm signal after acknowledging the initial alarm signal within 15 seconds of receipt. These time limits are designed to help eliminate the total reliance on human intervention (as typical in presignal systems) to actuate the alarm, especially when personnel are not available to acknowledge, investigate, and reset the alarm. Building or occupancy codes should be consulted to determine if a PAS system is permitted; specific permission of the authority having jurisdiction is required to use a positive alarm sequence. The following excerpt from NFPA *101* is provided for reference.

NFPA *101* (2018)

9.6.3.4 Where permitted by Chapters 11 through 43, a positive alarm sequence shall be permitted, provided that it is in accordance with *NFPA 72, National Fire Alarm and Signaling Code*.

If a PAS system is used in a building, combining the built-in delay with another programmed fire alarm system initiating device delay is not advisable. Other delays include the alarm verification feature (see 23.8.5.4.1), the presignal feature (see 23.8.1.1) or "cross-zoning" (the operation of multiple automatic detectors to initiate the alarm response; see 23.8.5.4.3). Multiple or compounded delays must not be programmed into the system, thus further delaying occupant notification and fire department response.

Exhibit 23.1 illustrates positive alarm sequence (PAS).

23.8.1.2.1 Systems that have positive alarm features complying with 23.8.1.2 shall be permitted if approved by the authority having jurisdiction.

23.8.1.2.1.1 The positive alarm sequence operation shall comply with the following:

(1) To initiate the positive alarm sequence operation, the signal from an automatic fire detection device selected for positive alarm sequence operation shall be acknowledged at the fire alarm control unit by trained personnel within 15 seconds of annunciation.

EXHIBIT 23.1

Positive Alarm Sequence (PAS) Flow Chart. (Source: R. P. Schifiliti Associates, Inc., Reading, MA)

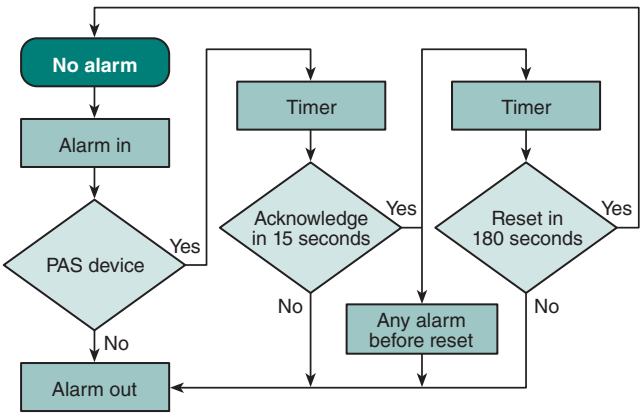

(2) If the signal is not acknowledged within 15 seconds, notification signals in accordance with the building evacuation or relocation plan and remote signals shall be automatically and immediately actuated.

(3) If the positive alarm sequence operation is initiated in accordance with 23.8.1.2.1.1(1), trained personnel shall have an alarm investigation phase of up to 180 seconds to evaluate the fire condition and reset the system.

(4) If the system is not reset during the alarm investigation phase, notification signals in accordance with the building evacuation or relocation plan and remote signals shall be automatically and immediately actuated.

(5) If a second automatic fire detector selected for positive alarm sequence is actuated during the alarm investigation phase, notification signals in accordance with the building evacuation or relocation plan and remote signals shall be automatically and immediately actuated.

(6)* If any other fire alarm initiating device is actuated, notification signals in accordance with the building evacuation or relocation plan and remote signals shall be automatically and immediately actuated.

A.23.8.1.2.1.1(6) "Immediately actuated" means there are no delays imposed by the system other than the processing of the signal in accordance with 23.8.1.1.

23.8.1.2.1.2* The system shall provide means for bypassing the positive alarm sequence.

A.23.8.1.2.1.2 The bypass means is intended to enable automatic or manual day, night, and weekend operation.

FAQ

What is the purpose of the PAS bypass means?

After acknowledgment of the alarm, actuation of the alarm functions is delayed for up to 180 seconds. The bypass provides a method for staff members to actuate the alarm as soon as they determine it is required, without needing to wait for the delay to expire. The PAS system bypass is typically located at the FACU or at a remote LCD annunciator, depending on where the trained personnel are required to be stationed based on the building evacuation or relocation plan.

As an alternative to actuating the bypass to initiate the alarm before the automatic delay expires, the personnel conducting the investigation can manually actuate a manual fire alarm box, and the occupant notification appliances will operate immediately [see 23.8.1.2.1.1(6)]. In addition, the bypass means could be used to bypass the PAS operation, thus enabling the fire alarm system to operate without delays (i.e., 15 seconds/180 seconds) associated with positive alarm sequence. See A.23.8.1.2.1.2.

System Design Tip

Not all manufacturers provide PAS on their equipment. The system designer and the authority having jurisdiction should check the listing to ensure the feature is listed.

FAQ

Is a waterflow switch considered an "automatic fire detection device" and, therefore, permitted to be an initiating device that could be part of a PAS system under 23.8.1.2.1.1?

A PAS system, where permitted to be used by other codes and standards, can be used to delay occupant notification when the alarm initiating device is a waterflow alarm switch. It is important to note that the sprinkler waterflow alarm switch serves two purposes:

1. To satisfy the requirements of Section 6.8 and 8.17.1 of NFPA 13, *Standard for the Installation of Sprinkler Systems*. An excerpt from NFPA 13, Section 6.8, is provided in the commentary following A.23.8.5.5.
2. To initiate occupant notification where required by NFPA *101* or locally adopted codes

A waterflow alarm, from the perspective of NFPA 13, is to notify personnel that the system has been activated or compromised. This is accomplished by providing an audible notification within 5 minutes after the start of waterflow. The alert can be provided mechanically or electrically and should be installed in a location that is specified or approved by the authority having jurisdiction. NFPA 13 does not require a general building alarm to be initiated, as the waterflow alarm is not intended to be a life safety device.

Where the waterflow alarm is required to be supervised by the fire alarm system, 17.13.2 requires the sprinkler waterflow alarm initiating device to activate within 90 seconds after the start of flow. It is important to understand that this only applies to activation of the switch and does not address any delays at the FACU, such as polling or alarm verification.

Paragraph 23.8.1.2 defines the operation of a PAS system. In accordance with 23.8.1.2.1.1, trained personnel must acknowledge an alarm signal within 15 seconds of initiation or else the alarm signal is initiated.

The combined effect of 17.13.2 and 23.8.1.2 ensures that the intent of NFPA 13, as described above, will be met, regardless of whether a PAS system is used. Since the PAS would have no bearing on sprinkler system operation, only the delay in occupant notification needs to be considered.

23.8.2* Alarm Control Units.

NFPA 720

A.23.8.2 This Code addresses field installations that interconnect two or more listed control units, possibly from different manufacturers, that together fulfill the requirements of this Code.

Such an arrangement should preserve the reliability, adequacy, and integrity of all alarm, supervisory, and trouble signals and interconnecting circuits intended to be in accordance with the provisions of this Code.

Where interconnected control units are in separate buildings, consideration should be given to protecting the interconnecting wiring from electrical and radio frequency interference.

A *fire alarm control unit (FACU)*, defined in 3.3.108, must comply with the requirements of 23.8.2 and be interconnected so that the system functions as a whole. The requirements of 23.8.2 cover the interconnection, monitoring, and compatibility of FACUs. The requirements apply to the interconnection of two or more FACUs regardless of whether the control units are from the same or different manufacturers.

23.8.2.1 Alarm and signaling systems shall be permitted to combine all detection, notification, and auxiliary functions in a single system or be a combination of component subsystems.

23.8.2.2 Except as permitted in 23.8.2.3, the alarm and signaling system components shall be permitted to share control equipment or shall be able to operate as stand-alone subsystems, but shall be arranged to function as a single system in accordance with 23.8.2.4 through 23.8.2.10.

There are various reasons for having multiple fire alarm subsystems and control units in a building. A building may need additional notification appliances and power supplies to conform to new requirements, such as those of the *Americans with Disabilities Act and Architectural Barriers Act Accessibility Guidelines (ADA-ABA-AG),* and the existing fire alarm system cannot accommodate the changes. A lack of spare parts or manufacturer support, or simple economics may also make modifying or expanding an existing FACU or system configuration unfeasible. As a consequence, a building addition or upgrade might be designed with a new, separate FACU.

The new FACU must function as if it were part of the original building fire alarm system. Where systems consist of two or more subsystems (control units) connected to a single- or multiple-master control unit(s), they must be arranged to function as a single system in accordance with 23.8.2.4 through 23.8.2.10. Multiple systems arranged to function as a single system must be capable of the following:

- Simultaneous, full-load operation without degradation in system performance
- Monitoring interconnection methods for integrity
- Monitoring and annunciating alarm, supervisory, and trouble signals for each interconnected FACU
- Being reset or silenced from one location under specific circumstances (see 23.8.2.9 and 23.8.2.10)

Also note that *dedicated function FACUs* and *releasing service FACUs*, defined in 3.3.108.2.1 and 3.3.108.2.2, respectively, fall under the scope of 23.8.2 and are required to be interconnected with the building's master FACU if a building fire alarm system exists or is being installed.

System Design Tip

The intent is not to propose the installation of multiple small, interconnected FACUs to avoid installation of a single, large FACU in a new fire alarm system installation. The system designer should use appropriately sized equipment designed to meet the site-specific needs of the facility. For some applications, a single control unit may be the most appropriate design approach. In other situations, a distributed system using multiple interconnected control units may best meet the design objectives. Paragraph 23.8.2.2 details the requirement that all connected control units must function as a single fire alarm system.

23.8.2.3 Where the building is not served by a building fire alarm system, independent dedicated function fire alarm systems and/or releasing fire alarm systems shall not be required to be interconnected to function as a single system.

Connecting multiple dedicated function FACUs in the absence of a building fire alarm system serves little purpose because each dedicated function fire alarm system is designed to function as a stand-alone system to accomplish its assigned tasks.

23.8.2.4 All component subsystems shall be capable of simultaneous, full-load operation without degradation of the required overall system performance.

It is not acceptable to design a fire alarm system with multiple components, such as multiple FACUs, and to size individual components, such as circuits or batteries, based on the assumption that only a portion(s) of the system will be operating at any one time. For example, the amplifiers serving an in-building fire EVAC system typically installed in a high-rise building must be designed to power all the loudspeakers that it supports under full-load conditions, not just the loudspeakers on the fire floor, the floor above, and the floor below.

23.8.2.5 The method of interconnection of fire alarm control units shall meet the monitoring requirements of Section 12.6 and *NFPA 70*, Article 760, and shall be achieved by the following recognized means:

(1) Electrical contacts listed for the connected load
(2) Data communications over a signaling line circuit(s) dedicated to the fire alarm or shared with other premises operating systems
(3) Other listed methods

SLCs are the predominant means for interconnecting multiple FACUs and other premises control and management systems, which is reflected in 23.8.2.5(2). The requirements in 23.8.2.6 address connections to other premises systems.

23.8.2.6 Where the signaling line circuit is shared by other premises operating systems, operation shall be in accordance with 23.8.4.

Where an SLC is shared by another premises operating system, it must comply with the requirements for combination systems in 23.8.4 in addition to the requirements of 23.8.2.6.1 and 23.8.2.6.2.

Fire alarm systems can be connected to or be part of an integrated building management system, which may control energy management, heating, ventilation, air conditioning, security, fire alarm, mass notification, and other functions. When fire alarm system functions are part of a larger, integrated system or network, fire alarm service must not be impaired by a malfunction of another system or network component. These systems must still meet all the requirements of a stand-alone fire alarm system, including performance, power supplies, and response times.

All signal control and transport equipment (routers and servers) must be listed for fire alarm service or comply with the conditions listed in 23.8.2.6.1(1) through 23.8.2.6.1(5). Paragraph 23.8.2.6.2 requires the use of a listed barrier gateway. See the definition of the term *gateway* in 3.3.122.

23.8.2.6.1 All signal control and transport equipment (such as routers and servers) located in a critical fire alarm or emergency control function interface device signaling path shall be listed for fire alarm service, unless the following conditions are met:

(1) The equipment meets the performance requirements of 10.3.5.
(2) The equipment is provided with primary and secondary power and monitored for integrity as required in Section 10.6, 10.6.9, Section 10.19, and Section 12.6.
(3) All programming and configuration ensure a fire alarm system actuation time as required in 10.11.1.
(4) System bandwidth is monitored to confirm that all communications between equipment that is critical to the operation of the fire alarm system or emergency control function interface devices take place within 10 seconds; failure shall be indicated within 200 seconds.
(5) Failure of any equipment that is critical to the operation of the fire alarm system or emergency control function interface devices is indicated at the master fire alarm control unit within 200 seconds.

23.8.2.6.2 A listed barrier gateway, integral with or attached to each control unit or group of control units, as appropriate, shall be provided to prevent the other systems from interfering with or controlling the fire alarm system.

The term *gateway* is defined in 3.3.122 as "a device that is used in the transmission of serial data (digital or analog) from the fire alarm control unit to other building system control units, equipment, or networks and/or from other building system control units to the fire alarm control unit." An example of the use of a listed barrier gateway is the interconnection of the fire alarm system network to a building automation system network.

Typically, building automation systems use a communications protocol such as Modbus®, BACnet™, LonWorks™, EtherNet/IP, or some proprietary communication protocol such as Metasys® by Johnson

Controls, to communicate between control equipment, workstations, and other peripherals. It is often advantageous for the fire alarm system to provide information to the building management system to initiate some action on receipt of an alarm signal. A listed barrier gateway provides that communication path between the two systems.

On the fire alarm side of the gateway, the information passed is one way; this information is supplemental annunciation only. It does not permit control of the fire alarm system with regard to the acknowledging of alarm signals, silencing of notification appliances, or, for example, the resetting of the control unit from a building automation workstation — nor does it permit programming changes from that same workstation. The information passed from the fire alarm system might include the type of device that is active (i.e., smoke detector, waterflow switch), the device signal (i.e., alarm, supervisory), and the location of the device (i.e., floor, room). This information can be displayed on the building automation system annunciators and workstations, as well as initiate the building automation system to actuate some action, such as the start of exhaust fans.

23.8.2.6.3 Where Class N is utilized for shared equipment, the requirements in 23.6.3 shall also apply.

Class N pathways are required to use shared pathway Level 3 unless a thorough written analysis of the risks, the maintenance plans, roles and responsibilities, and a deployment plan are submitted and approved. See 23.6.3.2. Level 3 requires dedicated equipment for life safety data; equipment cannot be shared. Class N pathways are not permitted to be accessible to the general public or building occupants for any purpose other than specified in the analysis, maintenance plans, and deployment plans.

Δ **23.8.2.7** Each interconnected alarm control unit shall be separately monitored for alarm, supervisory, and trouble conditions with supervised pathways that are in accordance with the manufacturers' published instructions.

Δ **23.8.2.7.1** Alarm conditions on interconnected alarm control units shall annunciate as alarm signals and initiate the evacuation signals.

Where a master FACU and satellite FACU are interconnected and the master FACU is monitoring an alarm relay at the satellite FACU, annunciation on the master FACU might resemble the following:

Alarm on satellite FACU reports on the master FACU as an alarm signal and displays the message "Alarm Satellite FACU"

Δ **23.8.2.7.2** Supervisory conditions on interconnected alarm control units shall annunciate as supervisory signals.

Where a master FACU and satellite FACU are interconnected and the master FACU is monitoring a supervisory relay at the satellite FACU, annunciation on the master FACU might resemble the following:

Supervisory on satellite FACU reports on the master FACU as a supervisory signal and displays the message "Supervisory Satellite FACU"

Δ **23.8.2.7.3** Trouble conditions on interconnected alarm control units shall annunciate as trouble signals.

Where a master FACU and satellite FACU are interconnected and the master FACU is monitoring a trouble relay at the satellite FACU, annunciation on the master FACU might resemble the following:

Trouble on satellite FACU reports on the master FACU as a trouble signal and displays the message "Trouble Satellite FACU"

23.8.2.7.4* Where supervised pathways between interconnected fire alarm control units is not achievable, a supervised annunciator shall be installed adjacent to control unit(s) to annunciate the status of the each control unit.

A.23.8.2.7.4 Where interconnected fire alarm control units have unsupervised form C contacts that change status during a trouble condition, annunciators installed at each control unit provide status indication.

Based on the age of some systems, the combination of two different manufacturers' systems or some other circumstance, interconnection of FACUs might be accomplished with unsupervised form C relay contacts. Where supervised pathways between the two FACUs (e.g., FACU 1 and FACU 2) are not achievable, a supervised annunciator is required to be placed adjacent to each FACU to provide a status indication of the other FACU.

23.8.2.8 Interconnected fire alarm control unit alarm signals shall be permitted to be monitored by zone or by combined common signals.

The protected premises may be a single building or a group of buildings, such as a campus setting that includes office, research, or educational buildings. In a campus setting where multiple buildings are considered to be the protected premises, each building may have an FACU that reports to a master FACU in one of the buildings. Due to renovations at different times, a single building may have multiple FACUs. A building may also have a master FACU serving the building along with FACUs that control specific emergency control functions, such as release of a special extinguishing system.

Where multiple FACUs are within the protected premises, one FACU may be designated as the main or master fire alarm panel for the building, with other FACUs reporting to the master FACU as if they were single initiating devices. For example, an FACU in a computer room that controls fire detection and actuation of a clean agent fire suppression system may report to the main building FACU as a single zone or component. In other words, when the computer room system has an alarm, supervisory, or trouble signal, it would annunciate the appropriate signal on the main building FACU as "Computer Room FACU Alarm," "Computer Room FACU Supervisory," or "Computer Room FACU Trouble." It would then be necessary to go to the computer room control unit to determine the specific alarm, supervisory, or trouble condition indicated on the computer room control unit. Where zoning and annunciation are a concern or where signals are transmitted to a supervising station, the requirements of 10.18.5 and 26.2.6 apply, and each building must be indicated separately for these functions.

Δ **23.8.2.9** Protected premises alarm control units shall be capable of being reset or silenced only from the protected premises, unless otherwise permitted by 23.8.2.10.

Remotely resetting fire alarm control equipment without first investigating the premises is a dangerous practice. A serious fire could be in progress that is not evident at the remote reset location. Delayed alarms are a contributing factor to many large loss-of-life and large property-loss fires. On-site restoration to normal of fire alarm systems is required. If a fire alarm system is in alarm or trouble, a technician should investigate the cause of that alarm or trouble first and then reset the FACU.

23.8.2.9.1 Where multiple control units of the same manufacturer are interconnected in a network arrangement and serve the same protected premises, the control units shall be arranged to be reset or silenced from one location.

System Design Tip

Where systems are installed in large buildings, the designer often installs multiple FACUs, subpanels, or transponders on different floors. This reduces the quantity of circuit "home runs" and the distance between devices and appliances, which will affect how the system is installed with regard to survivability and/or voltage drop.

The ability to reset and/or silence the entire system from one location also relieves personnel from having to travel to multiple FACUs to clear the signal after the condition is deemed no longer a threat. For example, consider a scenario where a 10-story building has one master FACU and one networked subpanel installed on each subsequent floor, thus installing 10 FACUs. If a smoke detector on the seventh floor actuates and the alarm signal is annunciated on the seventh floor control unit as well as the master FACU, the ability to reset and/or silence the entire system from one location relieves responding personnel from going to the seventh floor, silencing and resetting that control unit, and then going to the first floor and silencing and resetting the master FACU.

23.8.2.9.2 Where multiple control units of the different manufacturers are interconnected in accordance with 23.8.2.5 through 23.8.2.8 and serve the same protected premises, the control units shall be permitted to be reset or silenced individually at each control unit.

Where FACUs from different manufacturers are interconnected and serve the same protected premises, it may not be possible to reset and silence from one location. In these instances, the silencing and resetting scenario described above in the commentary following 23.8.2.9.1 will not be possible. Consider, for example, a building that has one FACU and one interconnected FACU, both of different manufacturers. If a smoke detector connected to FACU 2 actuates, the alarm signal is annunciated on FACU 2 as well as FACU 1. To silence and reset each control unit, the responding personnel will need to go to FACU 2 to silence and reset that control unit, and then go to FACU 1 to silence and reset that control unit.

23.8.2.9.3 Resetting procedures shall be documented and permanently posted beside each control unit and annunciator.

The resetting procedures for interconnected FACUs are required to be posted adjacent to each FACU and annunciator. It is important that responding personnel know how to perform these procedures before resetting a unit. See the silencing and resetting scenarios described above in the commentary following 23.8.2.9.1 and 23.8.2.9.2.

23.8.2.10 Remote resetting and silencing of a fire alarm control unit from other than the protected premises shall be permitted with the approval of the authority having jurisdiction.

Few situations warrant remote reset capability. In rare circumstances, the capability to reset or silence the fire alarm system from a remote location is necessary. This is permitted only when the authority having jurisdiction has agreed with reasons for providing remote reset and has determined the remote silence or reset capability will not compromise immediate response to an alarm signal. Remotely resetting fire alarm control equipment without first investigating the premises is a dangerous practice. A serious fire could be in progress that is not evident at the remote reset location.

NFPA 720

23.8.3 Protected Premises Fire Alarm and Signaling Systems Interconnected with Dwelling Unit Fire and Carbon Monoxide Warning Equipment.

Δ **23.8.3.1** A protected premises system shall be permitted to be interconnected to the household warning equipment for the purpose of actuating the notification appliances connected to the household warning equipment.

Where dwelling units, such as apartments or condominiums, are equipped with systems that comply with Chapter 29, the protected premises fire alarm system serving the apartment building as a whole may be used to actuate the notification appliances connected to the individual household fire alarm

systems in the dwelling units. Without this allowance, the installation of both building system and dwelling system notification appliances might be required. Notification appliances may be used as part of both the building fire alarm system and the household fire alarm system. This applies to *household fire alarm systems*, defined in 3.3.111.2, and not to single- and multiple-station alarms.

23.8.3.2 The actuation of dwelling unit warning equipment shall only be permitted to be displayed at the protected premises control unit and annunciators as supervisory signals.

The display of alarm signals of the dwelling unit on the protected premises FACU is permitted. The dwelling smoke alarms are not required to actuate the building fire alarm system. In most cases, this would not be desirable or permitted, because every accidental alarm in an individual dwelling unit would cause actuation of the building fire alarm system. However, some building codes require the smoke alarms to be connected to the building fire alarm system and arranged to initiate a supervisory signal when actuated. Also see 23.8.3.5.

Single- and multiple-station smoke alarms are not part of a fire alarm system, and the interconnecting circuits of these alarms are not monitored for integrity in the same manner that system components are monitored. One means for connecting smoke alarms with a building fire alarm system is with an auxiliary output module furnished separately from the individual smoke alarms. The auxiliary output module is typically interconnected in the smoke alarm circuit in the same way as the individual smoke alarms. The module usually provides a relay contact output that can be used to operate equipment (e.g., visual notification appliances) or for remote annunciation. The use of these modules is subject to any limitations stated in the manufacturer's published instructions and the modules may not be permitted to be used to report single- or multiple-station smoke alarm status to a supervising station. See 29.10.9.1.1. The limits of the number of devices specified in 29.11.2.1 also apply.

Δ **23.8.3.3** If interconnected, an alarm condition at the protected premises system shall cause the alarm notification appliance(s) within the family living unit of the dwelling unit warning equipment to become energized and remain energized until the protected premises system is silenced or reset.

Δ **23.8.3.4** The interconnection circuit or path from the protected premises system to the dwelling unit warning equipment shall be monitored for integrity by the protected premises system in accordance with Section 12.6.

Δ **23.8.3.5** An alarm condition occurring at the dwelling unit fire warning equipment or the operation of any test switches provided as part of the dwelling unit warning equipment shall not cause an alarm condition at the protected premises system.

23.8.4 Combination Systems.

A *combination system*, as defined in 3.3.111.1, is "a fire alarm system in which components are used, in whole or in part, in common with a non–fire signaling system." Also see A.3.3.111.1.

23.8.4.1* Fire alarm systems shall be permitted to share components, equipment, circuitry, and installation wiring with non–fire alarm systems.

A.23.8.4.1 The provisions of 23.8.4.1 apply to types of equipment used in common for fire alarm systems, such as fire alarm, sprinkler supervisory, or guard's tour service, and for other systems, such as burglar alarm or coded paging systems, and to methods of circuit wiring common to both types of systems. The intent of connecting non-fire systems with the fire alarm system is often to cause the non-fire systems to react appropriately when signaled by the fire alarm system.

Just about anything can be combined with a fire alarm system as long as it does not interfere with the operation of the fire alarm system. Combined features can include security functions, HVAC control, paging, and lighting. The only exception to this noninterference requirement is when an MNS is installed either as a stand-alone system interfaced with the fire alarm system or is integrated with the fire alarm system. (The MNS is permitted to override a fire alarm signal in accordance with Section 10.7 and 23.8.4.7.) Typically, only fire alarm system performance and MNS performance are regulated by codes and standards because failure of other systems does not normally have an adverse impact on life safety in the building.

FAQ What requirements apply when fire alarm SLCs are shared with other systems?

As a minimum, where fire alarm system SLCs are shared with other systems, the requirements of 23.8.2.6 and 23.8.4.4 apply and wiring for other systems must comply with the requirements of the *NEC*. Special care must be taken to ensure that the function or malfunction of other systems does not interfere with the operation of the fire alarm system.

N **23.8.4.2 Building System Information Unit (BSIU).**

N **23.8.4.2.1*** A building system information unit (BSIU) shall be listed to product safety standard ANSI/UL 60950, *Information Technology Equipment — Part 1: General Requirements*, or ANSI/UL 62368-1 *Audio/Video, Information and Communication Technology Equipment — Part 1: Safety Requirements,* or equivalent.

N **A.23.8.4.2.1** Buildings are advancing with technologies in HVAC, security, elevators, energy controls, and lighting. Building operators and designers expect to be able to integrate various building systems with human interfaces.

First responders are embracing new technologies, and the fire life safety systems have a lot of information to assist them in emergency response and also system evaluation.

For the first time, *NFPA 72* introduces the use of the common PC workstation technology having the UL listing for "shock and hazard" to be a part of the total building system without the UL 864 listing, which was a hindrance to the advancements in technologies.

N **23.8.4.2.2** Where a BSIU provides control of the fire alarm system, the requirements in 23.8.4.2.2.1 through 23.8.4.2.2.4 shall also apply.

N **23.8.4.2.2.1** A fire alarm control unit (FACU) controlling the fire alarm system shall be located within the same room as the BSIU.

N **23.8.4.2.2.2*** The BSIU shall not be permitted to perform fire alarm system control features that cannot be accomplished by the FACU within the room.

N **A.23.8.4.2.2.2** When the BSIU is not available to control the fire alarm system, the FACU within the room must be able to perform all the necessary controls of the fire alarm system without relying on the BSIU.

N **23.8.4.2.2.3** The communication path from the FACU and the BSIU shall meet the requirements of 23.8.4.4.1 through 23.8.4.4.3.

N **23.8.4.2.2.4** The application software for the BSIU shall be listed to ANSI/UL 864, *Control Units and Accessories for Fire Alarm Systems*.

23.8.4.3 Operation of a non–fire system function(s) originating within a connected non-fire system shall not interfere with the required operation of the fire alarm system, unless otherwise permitted by this Code.

While fire alarm systems are permitted to share circuits with non–fire alarm systems or components, the circuits are required to be arranged such that operation of the non–fire alarm system equipment or component does not impair the operation of the fire alarm system. For example, actuation of a security device on a shared circuit must not impair operation of the fire alarm system. Extensive testing may be required to ensure that this requirement is met under all possible operating conditions and all possible combinations of events.

On a shared circuit, fire alarm functions must take priority over operation of the other equipment or components on the circuit. The only exception to this requirement is where signals dealing with another life safety system, such as an MNS, might take priority over fire alarm signals, as addressed in Section 10.7 and 23.8.4.7.

23.8.4.4* For non–fire alarm equipment listed to the performance requirements specified in 10.3.5, the requirements of 23.8.4.4.1 through 23.8.4.4.3 shall apply.

Requirements for non–fire alarm equipment used in a combination system are addressed in two parts. Equipment that is listed to the performance requirements of 10.3.5 is addressed in 23.8.4.4, and equipment that is not listed to the performance requirements of 10.3.5 is addressed in 23.8.4.5.

A.23.8.4.4 For systems such as carbon monoxide detection, fire extinguisher electronic monitoring device, emergency communications (mass notification), or intrusion, much of the benefit of a combination system comes from being able to use common wiring. If the equipment in the combination system is of equivalent quality to fire alarm equipment, and the system monitors the wiring and equipment in the same way as fire alarm equipment, then sharing of wiring is permitted. If the equipment is not of equivalent quality, isolation between the systems would be required.

23.8.4.4.1 The equipment shall be permitted to be attached to a fire alarm circuit, either among the fire alarm devices or as a branch or extension of the fire alarm pathways, when the following requirements are met:

(1) All the equipment and pathways shall meet the monitoring for integrity requirements of 10.6.9, Section 10.19, and Section 12.6.
(2) All the equipment and pathways shall be maintained by a single service organization.
(3) All the equipment and pathways shall be installed in accordance with the requirements of this Code.
(4) All the equipment shall be listed as compatible with the fire alarm equipment or the equipment shall have an interface listed as compatible with the fire alarm equipment.

Connected equipment that is not listed for fire alarm service must not affect the operation of the fire alarm system adversely under any circumstance. Maintenance operations or failure of systems connected to the fire alarm system could result in impairment of the fire alarm system. Equipment that is not required for the operation of the fire alarm system must not impair operation of the fire alarm system if it is removed or malfunctions.

To display more detailed information than may be available from the fire alarm system alone, users may connect fire alarm systems to supplementary equipment (such as desktop computers and monitors) that are not listed for fire alarm use. In some installations, software or firmware changes or other repairs to the non–fire alarm equipment have delayed fire alarm signals or prevented their display altogether. Improperly interconnected systems can prevent one or more fire alarm system functions from operating as intended.

Where a non–fire alarm system component is listed as compatible with fire alarm equipment, the listing agency investigates compatibility with a fire alarm system, as well as electrical characteristics and other factors, to ensure that the product is suitable for the purpose.

23.8.4.4.2 If the equipment is attached to the fire alarm system via separate pathways, then short circuits or open circuits in this equipment, or between this equipment and the fire alarm system pathways, shall not impede or impair the monitoring for integrity of the fire alarm system or prevent alarm, supervisory, or fire safety control signal transmissions.

23.8.4.4.3 Grounds in this equipment, or between this equipment and the fire alarm system pathways, shall be reported, annunciated, and corrected in the same manner as grounds in the rest of the fire alarm system.

23.8.4.5 For non-fire equipment not listed to the performance requirements specified in 10.3.5, the requirements of 23.8.4.5.1 through 23.8.4.5.3 shall apply

23.8.4.5.1 Short circuits or open circuits in the equipment, or between the equipment and the fire alarm system pathways, shall not impede or impair the monitoring for integrity of the fire alarm system or prevent alarm, supervisory, or fire safety control signal transmissions.

Common wiring can include circuits supplying device power, initiating device circuits, SLCs, or notification appliance circuits. A short, ground, or open circuit caused by the non–fire alarm equipment in the common wiring must not prevent the receipt of alarm, supervisory, or trouble signals or prevent the fire alarm system notification appliances from operating.

23.8.4.5.2 Grounds in this equipment, or between this equipment and the fire alarm system pathways, shall be reported, annunciated, and corrected in the same manner as grounds in the rest of the fire alarm system.

23.8.4.5.3 Removal, replacement, failure, maintenance procedures, or ground on this hardware, software, or circuits shall not impair the required operation of the fire alarm system.

23.8.4.6 Loudspeakers used as alarm notification appliances on fire alarm systems shall also be permitted to be used for emergency communications systems when installed in accordance with Chapter 24.

Fire alarm loudspeakers can be used for other emergency communications if they are installed in accordance with the requirements of Chapter 24. Chapter 24 also permits the use of the loudspeakers for general paging, music, and other nonemergency functions if the requirements of 24.3.5.2 are satisfied.

23.8.4.7* In combination systems, fire alarm signals shall be distinctive, clearly recognizable, and shall be indicated as follows in descending order of priority, except where otherwise required by other governing laws, codes or standards, or by other parts of this Code:

(1) Signals associated with life safety
(2) Signals associated with property protection
(3) Trouble signals associated with life and/or property protection
(4) All other signals

N **A.23.8.4.7** Examples of signal classification are provided in Table A.23.8.4.7. This is not all-inclusive or prescriptive but is meant to illustrate a potential classification scheme. Actual schemes might vary depending upon the emergency response plan and/or requirements of the authority having jurisdiction. Mass notification systems are allowed to take priority over the fire alarm audible notification message or signal. This is intended to allow the mass notification system to prioritize emergency signals on the basis of risk to building occupants. The designer should specify the desired operation, in particular, as to what should occur immediately after the mass notification message has completed.

TABLE A.23.8.4.7 *Examples of Signal Classification*

Life Safety	*Property Protection*	*Trouble*	*Other*
Fire alarm signals	Security signals	Battery fault	HVAC signals
Carbon monoxide alarm signals	Supervisory signals	AC power failure	Occupancy
Code blue signals	Access control	IDC faults	
Panic alarms		NAC faults	
Hazmat signals		SLC faults	
Severe weather warnings			
Flood alarms			
Mass notification signals			
Holdup alarm signals			

Exhibit 23.2 shows a combination system that includes MNS components.

FAQ Must separate notification appliances always be used for non–fire functions?

Paragraph 23.8.4.7 does not necessarily mean that separate notification appliances are required. A single appliance may be used if it can provide different, distinctive signals and the fire alarm signal takes precedence over all other signals (with the exception of emergency signals from an MNS in accordance with Section 10.7 and 23.8.4.7). Where loudspeakers are used, the requirements of 23.8.4.6 must be observed. Note that visual notification appliances only for fire alarm signaling or to signal complete evacuation must be clear or nominal white in accordance with 18.5.3.5. The use of another color for other applications would require a separate appliance. See A.18.5.3.5 and 18.5.3.6.

Given that an emergency situation such as a terrorist attack can be a higher priority than a fire, the fire alarm signal may need to be overridden by signals from the MNS. The allowance for MNSs to take precedence over fire alarm signals is addressed in Section 10.7 and 23.8.4.7. Table A.23.8.4.7 provides examples of how types of signals should be prioritized for compliance with 23.8.4.7. System integration and event prioritization add extensively to the complexity of the system, and careful planning and coordination will be required to ensure that the system will respond to these situations properly.

The CO alarm signals in Table A.23.8.4.7 are classified as life safety signals. CO alarm signals are specifically identified to differentiate them from other signals.

23.8.4.8 If the authority having jurisdiction determines that the information being displayed or annunciated on a combination system is excessive and is causing confusion and delayed response to a fire emergency, the authority having jurisdiction shall be permitted to require that the display or annunciation of information for the fire alarm system be separate from, and have priority in accordance with, 23.8.4.7, over information for the non–fire alarm systems.

Causing an operator to scroll through many non–fire alarm system events such as door opening or closure signals can result in a delay in identifying and responding to fire alarm signals. If fire alarm signals cannot be identified easily and displayed on a priority basis, the authority having jurisdiction may require a separate display for the fire alarm signals. Under the requirements for listing FACUs to ANSI/UL 864, *Standard for Control Units and Accessories for Fire Alarm Systems,* systems are required to identify the zone of origin of the status change visually. The visual annunciation must be capable of displaying all zones that have a status change. However, if all status changes are not displayed simultaneously, the display must indicate the initial status change for the highest priority signal. An indication for each type (i.e., alarm, supervisory, trouble) of active nondisplayed changes must be continuously visible during any off-normal condition, and the nondisplayed status changes must be capable of being displayed by manual operation.

EXHIBIT 23.2

Combination Fire and Mass Notification System (MNS). (Source: Eaton, Long Branch, NJ, and Siemens Building Technologies, Inc., Buffalo Grove, IL)

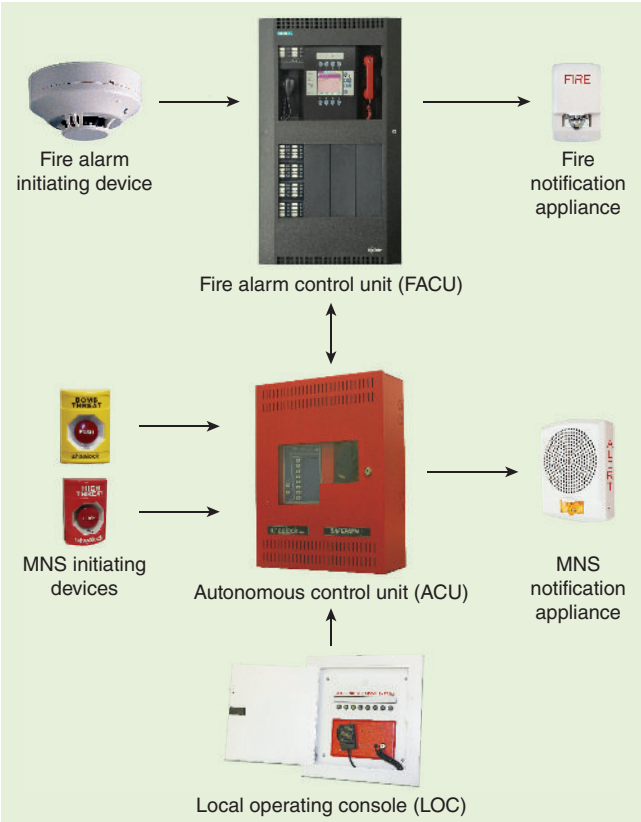

NFPA 720

23.8.4.9* Carbon Monoxide Detector Signals. Unless otherwise permitted by 23.8.4.9.1, signals from carbon monoxide detectors and carbon monoxide detection systems transmitted to a fire alarm system shall be indicated as a carbon monoxide alarm signal.

The 2019 edition of *NFPA 72* has incorporated the requirements from NFPA 720 for CO detection. A CO alarm signal defined in 3.3.263.2 is "a signal indicating a concentration of CO at or above the alarm threshold that could pose a risk to the life safety of the occupants and that requires immediate action." *NFPA 72* defines a supervisory signal in 3.3.263.9 as "a signal that results from the detection of a supervisory condition."

The concern is that, if actuation of a CO detector (monitored by a fire alarm system) is displayed as a supervisory signal, it might not receive the priority it warrants. Actuation of a CO detector could indicate a life-threatening situation for occupants in that space with a need for immediate action. This is the reason for the differentiation in signal classification.

It is not necessarily required that CO alarm signals initiate buildingwide evacuation and occupant notification or for those signals to be transmitted to the fire department or off-site to a supervising station. However, these responses might occur based on the building's response plan, the evacuation plan, the fire safety plan, or similar documentation.

Paragraph 23.8.4.9 provides the signaling requirements for the detection of CO. The CO notification signal is required to be distinctly different from that of the fire alarm signal. The occupant notification signal required by *NFPA 72* is a four-pulse temporal pattern. See 18.4.3.2 and Figure 18.4.3.2.

A.23.8.4.9 See NFPA 720 for more information.

N **23.8.4.9.1** When in accordance with the emergency response plan, evacuation plan, fire safety plan, or similar documentation, signals from carbon monoxide detectors and carbon monoxide detection systems transmitted to a fire alarm system shall be permitted to be supervisory signals.

Under certain conditions, CO alarm signals are permitted to be displayed as supervisory signals on the fire alarm system display. Due to the life safety and toxic concerns of CO, it is important to develop an emergency response plan, evacuation plan, fire safety plan, or similar document to establish the response protocol upon activation of a CO detector.

23.8.4.9.2* Fire alarm system processing for and occupant response to carbon monoxide alarm signals shall be in accordance with the emergency response plan, evacuation plan, fire safety plan, or similar documentation.

A.23.8.4.9.2 Response to carbon monoxide alarm signals could include, but not be limited to, any one of the following: immediate evacuation of occupants, immediate call to the fire department or other responding authorities, relocation of occupants to another portion of the building, investigation of the area identified, and/or opening of all doors and windows to the outside in the area identified.

N **23.8.4.9.3** Where carbon monoxide warning equipment is connected to a protected premises fire alarm system, receipt of signals shall initiate the signal required by Section 18.4.

CO can be as deadly as fire and toxic smoke, heat, and gases. Therefore, audible notification must be provided to the building occupants or the affected notification zone. The characteristics of the audible notification for CO is required to be distinctly different from that of the fire alarm audible notification signal. The CO signal is a four-pulse temporal pattern. See 18.4.3.2 and Figure 18.4.3.2.

N **23.8.4.9.4** Operation of carbon monoxide alarms or detectors shall not cause fire alarm or combination control units to actuate either protected premises or supervising station fire alarm signals.

• **23.8.4.10*** Signals from a fire extinguisher electronic monitoring device or fire extinguisher monitoring system transmitted to a fire alarm system shall be permitted to be supervisory signals.

A.23.8.4.10 See NFPA 10 for more information on portable fire extinguishers.

Fire extinguisher electronic monitoring devices and systems are designed to monitor the presence of a fire extinguisher, the obstructions in front of a fire extinguisher, and the pressure inside a portable fire extinguisher. These devices and systems are treated the same as other fire protection systems monitored by the fire alarm system. Exhibit 23.3 shows an example of a wireless fire extinguisher monitoring device.

EXHIBIT 23.3

Wireless Fire Extinguisher Monitoring Device. (Source: en-Gauge, Inc., Rockland, MA)

23.8.5 Fire Alarm System Inputs.

System Design Tip

The requirements of the Code exist in a framework that involves many other codes, standards, and jurisdictional documents that work together for the protection of life and property against the ravages of fire. With this framework in mind, the types of inputs (and outputs) required for the fire alarm system are selected primarily to meet the requirements of a model building code; a federal, state, or local ordinance; insurance company requirements; corporate policies; or other organizational policies (both private and public). This framework can include the criteria used by the designer to meet the goals of the system owner. Where this Code requires certain inputs, they

are usually related to supporting the reliability of the system or are based on requirements from other codes or standards.

23.8.5.1 General.

23.8.5.1.1 All initiating devices shall be installed in accordance with Chapter 17 and tested in accordance with Chapter 14.

The term *device* generally means input is provided to the system. See the term *initiating device* defined in 3.3.141, along with the specific types of initiating devices.

Devices that are used in a low-temperature environment, a wet location, or in a harsh location such as an elevator hoistway (including the pit) must be listed not only for fire alarm system use but also for installation in that specific environment (see also 17.7.1.8). An FACU used for actuation of an extinguishing system must be specifically listed for releasing service (see Section 23.11). Ensuring that a device is listed is not sufficient. The device must be listed for the specific application, which is also referred to as *listed for the purpose.* See 10.3.1 and its associated commentary.

23.8.5.1.2* Where connected to a supervising station, fire alarm systems employing automatic fire detectors or waterflow detection devices shall include a manual fire alarm box to initiate a signal to the supervising station.

System Design Tip

Any fire alarm system that uses automatic fire detectors or sprinkler waterflow switches must be provided with at least one manual fire alarm box if the system is connected to a supervising station. This requirement applies to all types of systems except dedicated function systems installed to provide elevator recall control and supervisory service.

The manual means for actuating the building fire alarm system is intended for use only by the system technician or the building owner and not building occupants as typical manual fire alarm boxes installed as part of a building fire alarm system would be used. The manual fire alarm box should be located by the system designer where a technician or the building owner would have access to it, such as near the sprinkler riser or the FACU.

A.23.8.5.1.2 The manual means required by 23.8.5.1.2 is intended to provide a backup means to manually actuate the fire alarm system when the automatic fire detection system or waterflow devices are out of service due to maintenance or testing, or where human discovery of the fire precedes automatic sprinkler system or automatic detection system activation.

The manual fire alarm box required by 23.8.5.1.2 should be connected to a separate circuit that is not placed "on test" when the detection or sprinkler system is placed "on test." The manual means is only intended for use by the system technician or the building owner and should be located by the sprinkler riser or fire alarm control unit.

FAQ Why does the Code require at least one manual fire alarm box?

Paragraph A.23.8.5.1.2 includes information and guidance to help users understand the purpose of requiring at least one manual fire alarm box. One reason is to allow an alarm to be transmitted if the automatic fire detectors or sprinkler system is out of service during repairs or during a test. This requirement presumes that a contingency plan exists to address a fire emergency during the

out-of-service time or during a test. It also presumes that personnel in the facility and at the supervising station to which the premises is connected are aware of the plan and will acknowledge receipt of the alarm.

Although not required, positioning manual fire alarm boxes electrically ahead of all other initiating devices — depending on the design of the circuit — ensures that the alarm signal will be initiated even if an open circuit condition occurs downstream of the manual fire alarm box. In addition, A.23.8.5.1.2 recommends placing the manual fire alarm box on a separate circuit that will not be placed "on test."

N **23.8.5.1.3** Fire alarm systems dedicated to elevator recall control and supervisory service as permitted in Section 21.3 shall not be required to meet 23.8.5.1.2.

23.8.5.2 Fire Alarm Signal Initiation — Manual. Manual fire alarm signal initiation shall comply with the requirements of Section 17.15.

23.8.5.2.1 If signals from manual fire alarm boxes and other fire alarm initiating devices within a building are transmitted over the same signaling line circuit, there shall be no interference with manual fire alarm box signals when both types of initiating devices are operated at the same time.

This requirement applies only to SLCs. It does not apply to initiating device circuits because those circuits do not distinguish the device that initiated the alarm. The requirement originally addressed spring-wound, coded devices that transmitted a fixed number of rounds of code. Although circuits of this type are still in service in old facilities, few if any new circuits of this type are installed today. Two or more devices operating simultaneously could interfere with one another, resulting in the transmission of garbled signals. The installation of manual fire alarm boxes on initiating device circuits with other initiating devices such as smoke detectors or heat detectors is permitted.

23.8.5.2.2 Provision of the shunt noninterfering method of operation shall be permitted for this performance.

The shunt noninterfering method of operation is one way to prevent the signals from publicly accessible alarm boxes from interfering with one another. This same system can be used where coded fire alarm systems are used as the protected premises fire alarm system. As mentioned in the commentary following 23.8.5.2.1, while circuits of this type are still in service in various facilities, few if any new circuits of this type are installed today.

23.8.5.3 Fire Alarm Signal Initiation — Initiating Devices with Separate Power and Signaling Wiring.

23.8.5.3.1 Automatic fire alarm signal initiating devices that have integral trouble signal contacts shall be connected to the initiating device circuit so that a trouble condition within a device does not impair alarm transmission from any other initiating device, unless the trouble condition is caused by electrical disconnection of the device or by removing the initiating device from its plug-in base.

If a device with integral trouble contacts is connected incorrectly to an initiating device circuit, disabling the initiating device circuit when the device experiences a trouble condition is possible. The initiating device circuit must first connect to all the alarm contacts of the initiating devices.

Then, after the connecting to the alarm contacts of the last initiating device, the circuit must route back through the trouble contacts. This places the trouble contacts beyond the alarm contacts of all the initiating devices. Exhibits 23.4 and 23.5 show the incorrect and correct methods of connection.

At one time, photoelectric smoke detectors used a tungsten filament lamp as a light source. The detector was required to monitor the integrity of the filament. An open filament would cause a relay within the detector to open a normally closed trouble contact. This contact was wired in series with the initiating device circuit. Few initiating devices, other than radiant energy–sensing fire detectors, have integral trouble contacts.

Disconnection or removal of any initiating device from a plug-in base opens the circuit and results in a circuit trouble signal. Paragraph 23.8.5.3.1 recognizes this expected circuit trouble signal and exempts it from the requirement.

EXHIBIT 23.4

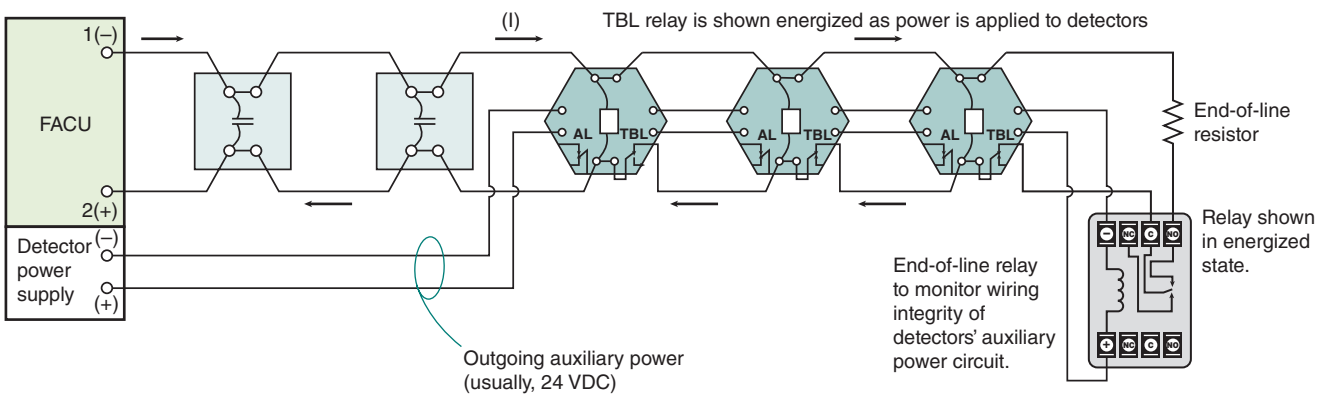

Incorrect Method of Connecting Integral Trouble Contacts.

EXHIBIT 23.5

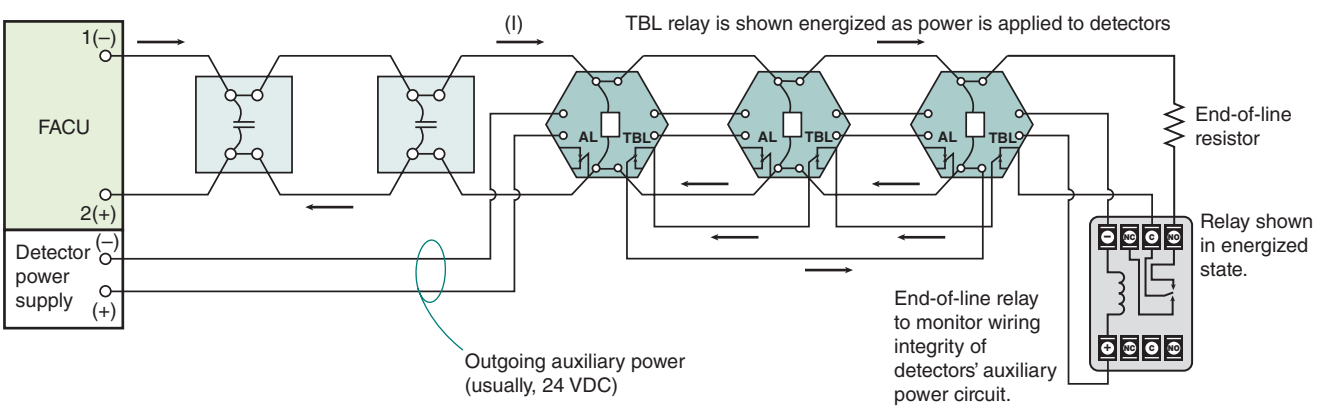

Correct Method of Connecting Integral Trouble Contacts.

23.8.5.3.2* Automatic fire alarm signal initiating devices that use a nonintegral device to monitor the integrity of the power supply wiring to the individual initiating devices shall have the nonintegral device connected to the initiating device circuit so that a fault on the power supply wiring does not impair alarm transmission from any operational initiating device.

A.23.8.5.3.2 Where power is supplied separately to the individual initiating device(s), multiple initiating circuits are not prohibited from being monitored for integrity by a single power supervision device.

FAQ

How must the power circuit be arranged if the detection device receives power from an external power circuit?

Some detection devices receive power from an external power circuit. Where detection devices receive power from an external power circuit, the power circuit must be arranged such that its failure does not impair the operation of any other fire detectors. Exhibit 23.6 shows an example of how this monitoring is accomplished.

23.8.5.4 Fire Alarm Signal Initiation — Detection Devices.

23.8.5.4.1* Systems equipped with alarm verification features shall be permitted under the following conditions:

(1) The alarm verification feature is not initially enabled, unless conditions or occupant activities that are expected to cause nuisance alarms are anticipated in the area that is protected by the smoke detectors. Enabling of the alarm verification feature shall be protected by password or limited access.
(2) A smoke detector that is continuously subjected to a smoke concentration above alarm threshold does not delay the system functions of Sections 10.7 through 10.17, or 21.2.1 by more than 1 minute.
(3) Actuation of an alarm-initiating device other than a smoke detector causes the system functions of Sections 10.7 through 10.17, or 21.2.1 without additional delay.
(4) The current status of the alarm verification feature is shown on the record of completion *[see Figure 7.8.2(a), item 4.3]*.

EXHIBIT 23.6

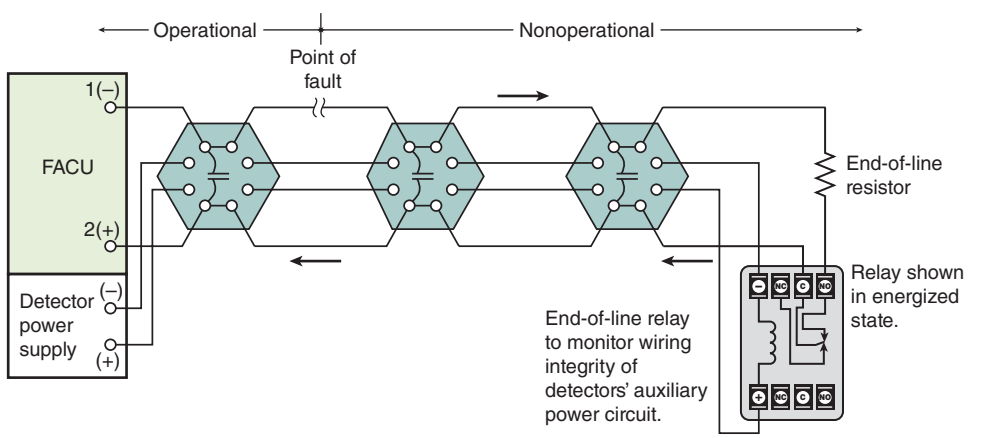

Four-Wire Smoke Detectors Monitored for Absence of Operating Power by End-of-Line Power Supervision Relay.

The *alarm verification feature*, defined in 3.3.17, initiates a time period in which to confirm a valid signal with the objective of reducing unwanted alarms. The feature is permitted only for smoke detectors and not for use with heat detectors. The use of this feature is restricted to situations in which transient conditions or activities that would cause nuisance alarms are anticipated. The accompanying Closer Look provides more information on alarm verification and its application in reducing nuisance alarms.

Closer Look

Applications and Limitations of the Alarm Verification Feature

The alarm verification feature for all smoke detectors in a system used to be a requirement in some model building codes until the year 2000. The Code states in 23.8.5.4.1(1) that alarm verification is permitted if "the alarm verification feature is not initially enabled, unless conditions or occupant activities that are expected to cause nuisance alarms are anticipated in the area that is protected by the smoke detectors."

System Design Tip

The alarm verification feature is not programmed from the onset. It is more likely that it would be enabled after a system is in place and has experienced nuisance alarms due to existing conditions or occupant activities in a specific area. If used, it is likely that not all smoke detectors on an installation will be programmed with this feature, only smoke detectors in select areas that are known to cause nuisance alarms. Not all manufacturers provide alarm verification on their equipment. The system designer and the authority having jurisdiction should check the listing to ensure the feature is listed.

The alarm verification feature should not be used to compensate for a poor design that places the wrong type of smoke detector in locations prone to unwanted alarms. The feature is also not intended to eliminate unwanted alarms resulting from failure to properly test and maintain smoke detectors. In some cases, the feature is automatically programmed into the FACU. The record of completion form [see Figure 7.8.2(a) through 7.8.2(f)] must show whether alarm verification is enabled. If the status of the alarm verification feature changes, the record of completion form must be updated after the reacceptance test.

If the alarm verification feature is used in a building, combining the built-in delay with any other programmed fire alarm system initiating device delay is not advised. Other delays include the alarm verification feature (see 23.8.5.4.1), "cross-zoning" (the operation of multiple automatic detectors to initiate the alarm response, see 23.8.5.4.3), the presignal feature (see 23.8.1.1), or the PAS feature (see 23.8.1.2). Multiple or compounded delays must not be programmed into the system, thus further delaying occupant notification and fire department response.

A.23.8.5.4.1 The alarm verification feature should not be used as a substitute for proper detector location/applications or regular system maintenance. Alarm verification features are intended to reduce the frequency of false alarms caused by transient conditions. They are not intended to compensate for design errors or lack of maintenance.

Alarm verification can be useful in reducing nuisance alarms caused by the casual spraying of aerosols into a smoke detector, a gust of wind blowing dust or contaminants into the detector, and similar transient conditions. Verification does not reduce nuisance alarms from conditions that remain relatively constant, such as high humidity, high air velocities, insect infestation, and where people persistently initiate malicious alarms. Alarm verification should not be installed or programmed in a system that experiences unwanted alarms without the specific cause(s) of the alarms being determined.

Alarm verification is a specific operation and timing sequence of smoke detector/system operation. Verification must be listed as part of the control unit, device, or circuit card. Exhibit 23.7 illustrates the alarm verification timing sequence.

EXHIBIT 23.7

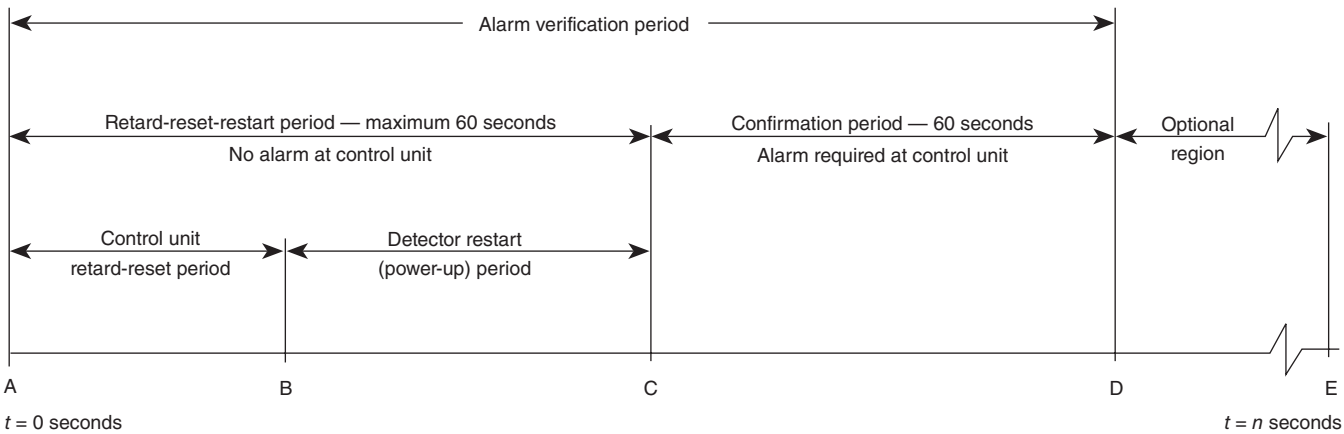

A — Smoke detector goes into alarm.

AB — Retard-reset period (control unit) — Control unit senses detector in alarm and retards (delays) alarm signal, usually by de-energizing power to the detector. Length of time varies with design.

BC — Restart period (detector power-up time) — Power to the detector is reapplied and time is allowed for detector to become operational for alarm. Time varies with detector design.

AC — Retard-reset-restart period — No alarm obtained from control unit. Maximum permissible time is 60 seconds.

CD — Confirmation period — Detector is operational for alarm at point C. If detector is still in alarm at point C, control unit will alarm. If detector is not in alarm, system returns to standby. If the detector re-alarms at anytime during the confirmation period, the control unit will alarm.

DE — Optional region — Either an alarm can occur at control unit or restart of the alarm verification cycle can occur.

AD — Alarm verification period — Consists of the retard-reset-restart and confirmation periods.

Alarm Verification Timing Diagram. (Source: Underwriters Laboratories Inc., Northbrook, IL)

23.8.5.4.2 If automatic drift compensation of sensitivity for a fire detector is provided, the fire alarm control unit shall identify the affected detector when the limit of compensation is reached.

Outside sources, such as dust, dirt, or environmental changes, can affect the sensitivity of a smoke detector. Automatic drift compensation helps keep the detector within its original range of sensitivity. If the compensated value places the detector outside its listed window of sensitivity, the control unit indicates that maintenance is needed.

23.8.5.4.3 Systems that require the operation of two automatic detectors to initiate the alarm response shall be permitted, provided that the following conditions are satisfied:

(1) The systems are not prohibited by the authority having jurisdiction.
(2) At least two automatic detectors are in each protected space.
(3) The alarm verification feature is not used.

The configuration described in 23.8.5.4.3 is also referred to as cross-zoning and priority matrix zoning. This configuration is most commonly used for the actuation of extinguishing systems. Since actuation of more than one detector is required to initiate discharge of the extinguishing system, the potential for accidental discharge is minimized. Note that the detector spacing must also comply with the requirements of 23.8.5.4.4 and 23.8.5.4.5.

If the actuation of multiple devices to initiate an alarm is used in a building, combining the built-in delay with another programmed fire alarm system initiating device delay is not advised. Other delays include the alarm verification feature (see 23.8.5.4.1), the presignal feature (see 23.8.1.1), or the PAS feature (see 23.8.1.2). Multiple or compounded delays must not be programmed into the system, thus further delaying occupant notification and fire department response.

23.8.5.4.4 For systems that require the operation of two automatic detectors to initiate emergency control functions or to actuate fire extinguishing or suppression systems, the detectors shall be installed at the spacing determined in accordance with Chapter 17.

System Design Tip

For applications involving the initiation of emergency control functions or the actuation of extinguishing or suppression systems, detector spacing cannot exceed the limits determined in accordance with Chapter 17 (e.g., see 17.7.1.3 where performance-based designs are discussed). Although a requirement for reduced spacing is not specified in 23.8.5.4.4, some applications and designs might use detector spacing that would be significantly less than that required by Chapter 17, since actuation of two detectors is required for system discharge. Using a reduced spacing may speed actuation of the extinguishing system and may be required by the system designer to achieve a desired performance goal.

23.8.5.4.5 For systems that require the operation of two automatic detectors to actuate public mode notification, the detectors shall be installed at a linear spacing not more than 0.7 times the linear spacing determined in accordance with Chapter 17.

Applications that require the actuation of two detectors to actuate public mode notification are rare. For such applications, the linear spacing determined in accordance with Chapter 17 must be effectively reduced by at least 30 percent, increasing the number of detectors that would otherwise be needed. This method should not be used to minimize unwanted alarms that are the result of the improper application of detectors or poor system design.

23.8.5.4.6 Signal Initiation — Duct Smoke Detectors.

23.8.5.4.6.1 Where duct smoke detectors are required to be monitored and a building fire alarm system is installed, a duct detector activation signal shall meet the requirements of 21.7.4.

23.8.5.4.6.2 Where duct smoke detectors are connected to a protected premises fire alarm system, the operation of the power circuit shall meet the requirements of 23.4.2.2.

23.8.5.4.6.3* Where duct smoke detectors with separate power and signal wiring are installed and connected to a protected premises fire alarm system, they shall meet the requirements of 23.8.5.3.

A.23.8.5.4.6.3 Where a separate power source is provided for a duct smoke detector, consideration should be given to provide a secondary power source for the duct detector power source as a power failure to the duct detector will (or should) indicate a trouble condition on the fire panel. If the system is connected to an off-premises monitoring station, a trouble signal will be sent immediately upon power failure. This is in contrast to the intent and requirements to delay the off-premises reporting of primary power failures.

As stated in A.21.7.2, this Code does not specifically require detection devices used to cause the operation of HVAC system smoke dampers, fire dampers, fan control, smoke doors, or fire doors to be connected to the fire alarm system. However, if the devices are connected to the fire alarm system, the wiring to these devices must be monitored for integrity the same as any other system detector. Stand-alone detectors, including 120 VAC-powered, single-station smoke alarms used to control HVAC equipment, that are not connected to the fire alarm system cannot be monitored for integrity.

23.8.5.4.6.4 Where duct smoke detectors are not resettable from the protected premises fire alarm system, a listed alarm/supervisory indicator with an integral reset switch shall be provided in an accessible location.

23.8.5.5* Fire Alarm Signal Initiation — Sprinkler Systems.

A.23.8.5.5 This Code does not specifically require a waterflow alarm initiating device to be connected to the building fire alarm system. Connection to the building fire alarm system would be determined by the requirements established by the authority having jurisdiction. See A.1.2.4.

FAQ

Does *NFPA 72* require connection of a waterflow alarm initiating device to a fire alarm system?

The requirement to have a fire alarm system input from a waterflow alarm initiating device(s) is established by the requirements of other codes or sources. For example, where a supervised automatic sprinkler system is provided in accordance with NFPA *101*, that system is required to transmit a waterflow alarm to a supervising station or the fire department by means of a fire alarm system. See the following excerpt from NFPA *101*.

NFPA *101* (2018)

9.7.2.2 Alarm Signal Transmission.

9.7.2.2.1 Where supervision of automatic sprinkler systems is required by another section of this *Code*, waterflow alarms shall be transmitted to an approved, proprietary alarm-receiving facility, a remote station, a central station, or the fire department.
9.7.2.2.2 The connection described in 9.7.2.2.1 shall be in accordance with 9.6.1.3.

The detailed installation and performance requirements for the sprinkler system are in NFPA 13. Included are requirements for waterflow alarms and a requirement for compliance with *NFPA 72* when alarm initiating devices are connected as part of a fire alarm system. See the following excerpt.

NFPA 13 (2016)

6.8 Waterflow Alarm Devices.

6.8.1 General. Waterflow alarm devices shall be listed for the service and so constructed and installed that any flow of water from a sprinkler system equal to or greater than that from a single automatic sprinkler of the smallest K-factor installed on the system will result in an audible alarm on the premises within 5 minutes after such flow begins and until such flow stops.

6.8.2 Waterflow Detection Devices.

6.8.2.1 Wet Pipe Systems. The alarm apparatus for a wet pipe system shall consist of a listed alarm check valve or other listed waterflow detection alarm device with the necessary attachments required to give an alarm.

6.8.2.2 Dry Pipe Systems.

6.8.2.2.1 The alarm apparatus for a dry pipe system shall consist of listed alarm attachments to the dry pipe valve.

6.8.2.2.2 Where a dry pipe valve is located on the system side of an alarm valve, connection of the actuating device of the alarms for the dry pipe valve to the alarms on the wet pipe system shall be permitted.

6.8.2.3 Preaction and Deluge Systems. The alarm apparatus for deluge and preaction systems shall consist of alarms actuated independently by the detection system and the flow of water.

NFPA 13 (2016) *(Continued)*

6.8.2.3.1 Deluge and preaction systems activated by pilot sprinklers shall not require an independent detection system alarm.

6.8.2.4* Paddle-Type Waterflow Devices. Paddle-type waterflow alarm indicators shall be installed in wet systems only.

A.6.8.2.4 The surge of water that occurs when the valve trips can seriously damage the device. Paddle-type waterflow devices are also permitted to be installed on wet systems that supply auxiliary dry pipe and/or preaction systems.

6.8.3 Attachments — General.

6.8.3.1* An alarm unit shall include a listed mechanical alarm, horn, or siren or a listed electric gong, bell, speaker, horn, or siren.

A.6.8.3.1 Audible alarms are normally located on the outside of the building. Listed electric gongs, bells, horns, or sirens inside the building, or a combination of such used inside and outside, are sometimes advisable.

Outside alarms might not be necessary where the sprinkler system is used as part of a central station, auxiliary, remote station, or proprietary signaling fire alarm system, utilizing listed audible inside alarm devices.

6.8.3.2* Outdoor water motor-operated or electrically operated bells shall be weatherproofed and guarded.

A.6.8.3.2 All alarm apparatus should be so located and installed that all parts are accessible for inspection, removal, and repair, and such apparatus should be substantially supported.

The water motor gong bell mechanism should be protected from weather-related elements such as rain, snow, or ice. To the extent practicable, it should also be protected from other influencing factors such as birds or other small animals that might attempt to nest in such a device.

6.8.3.3 All piping to water motor-operated devices shall be galvanized steel, brass, copper, or other approved metallic corrosion-resistant material of not less than ¾ in. (20 mm) nominal pipe size.

6.8.3.4 Piping between the sprinkler system and a pressure-actuated alarm-initiating device shall be galvanized steel, brass, copper, or other approved metallic corrosion-resistant material of not less than ⅜ in. (10 mm) nominal pipe size.

6.8.4* Attachments — Electrically Operated.

A.6.8.4 Switches that will silence electric alarm-sounding devices by interruption of electric current are not desirable; however, if such means are provided, then the electric alarm-sounding device circuit should be arranged so that, when the sounding device is electrically silenced, that fact should be indicated by means of a conspicuous light located in the vicinity of the riser or alarm control panel. This light should remain in operation during the entire period of the electric circuit interruption.

6.8.4.1 Electrically operated alarm attachments forming part of an auxiliary, central station, local protective, proprietary, or remote station signaling system shall be installed in accordance with *NFPA 72*.

6.8.4.2 Sprinkler waterflow alarm systems that are not part of a required protective signaling system shall not be required to be supervised and shall be installed in accordance with *NFPA 70*, Article 760.

6.8.4.3 Outdoor electric alarm devices shall be listed for outdoor use.

6.8.5 Alarm Device Drains. Drains from alarm devices shall be arranged so that there will be no overflowing at the alarm apparatus, at domestic connections, or elsewhere with the sprinkler drains wide open and under system pressure. *(See 8.16.2.6.)*

Again, the requirement for connection to a fire alarm system would be established from other sources such as NFPA *101* or the building code adopted by the jurisdiction and will depend on the type of occupancy involved. Even where not required by other codes or authorities, the design criteria used to meet the owner's goals may establish the need or desire for this input.

Exhibit 23.8 shows an example of a typical waterflow switch.

EXHIBIT 23.8

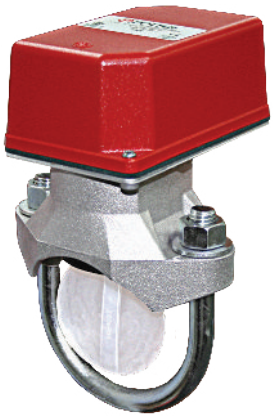

Vane-Type Waterflow Switch. (Source: Potter Electric Signal Company, LLC, St. Louis, MO)

23.8.5.5.1 Where required by other governing laws, codes, or standards to be electronically monitored, waterflow alarm-initiating devices shall be connected to a dedicated function fire alarm control unit designated as "sprinkler waterflow and supervisory system" and permanently identified on the control unit and record drawings.

Where other codes, standards, or authorities having jurisdiction require the supervision of automatic sprinkler systems, a dedicated function FACU is used. This requirement assumes that there is no building fire alarm system.

N **23.8.5.5.2** Waterflow alarm-initiating devices connected to a building alarm system shall not be required to meet the requirements of 23.8.5.5.1.

A dedicated function FACU is required only if there is no building fire alarm system. The installation of a dedicated function FACU does not trigger a requirement for a building fire alarm system if one does not already exist.

23.8.5.5.3* The number of waterflow alarm-initiating devices permitted to be connected to a single initiating device circuit shall not exceed five.

A.23.8.5.5.3 Circuits connected to a signaling line circuit interface are initiating device circuits and are subject to these limitations.

Limiting the number of waterflow switches minimizes the area emergency responders must search to find the fire location. It also limits loss of fire detection to a manageable area because in some cases the sprinklers and waterflow switches also serve as the building fire detection system.

Even the limit of five waterflow switches on a single initiating device circuit may be too many based on design considerations and site-specific conditions. Given that NFPA 13 permits a single sprinkler system to protect up to 52,000 ft^2 (4831 m^2) per floor, five waterflow switches on a single initiating device circuit would result in a common signal from an area of up to 260,000 ft^2 (24,155 m^2). Locating fire and operating sprinklers in a large, open manufacturing building might be easy for emergency responders, but the task is much more difficult in an office building or educational facility that is divided into many small rooms.

The number of waterflow switches permitted on an SLC is not limited, other than the limits imposed by the design of the equipment, because each waterflow alarm can be annunciated individually. See the commentary following A.23.6.1. Also see the definitions of the terms *initiating device circuit* and *signaling line circuit* in 3.3.142 and 3.3.265, as well as the related commentary following 3.3.142.

Paragraph A.23.8.5.5.3 recognizes that an SLC interface may be used to connect waterflow alarm initiating devices to an SLC and that the limit of five devices also applies to any waterflow alarm initiating devices connected to the interface. See the defined term *signaling line circuit interface* in 3.3.146.1.2.

23.8.5.5.4 If a valve is installed in the connection between a sprinkler system and an initiating device, the valve shall be supervised in accordance with 17.17.1.

NFPA 13 does not always require the supervision of sprinkler system control valves by a fire alarm system. However, NFPA 13 is primarily concerned with the availability of the water supply to the sprinkler system. Fire alarm system initiating devices installed on sprinkler systems are installed for the purposes of alarm initiation or sprinkler system supervision. Not all fire alarm attachments are installed for water supply supervision, as covered by 8.16.1.1.2.1 of NFPA 13, which is excerpted in the commentary following A.23.8.5.6. Others may be provided to ensure the correct operation of the fire alarm system or to provide alarm signal initiation.

NFPA 72 has the scope to require functionality from the initiating device to occupant notification and to include a supervising station signal transmission. It is possible that the closure of an isolation valve to an alarm initiating device that prevents initiation of a supervisory signal or an alarm signal constitutes a very serious risk. NFPA 13 does not address this issue, which is clearly under the scope of *NFPA 72*. Closure of these valves will render the initiating device inoperative and may result in the loss of occupant notification in a fire or operator notification that a suppression system is impaired. Therefore, fire alarm system supervision of these valves is imperative.

23.8.5.6* Supervisory Signal Initiation — Sprinkler Systems.

A.23.8.5.6 This Code does not specifically require supervisory signal initiating devices to be connected to the building fire alarm system. Connections to the building fire alarm system would be determined by the requirements established by the authority having jurisdiction. See A.1.2.4. Some systems utilize nonelectrical methods to supervise conditions of the system such as chains on sprinkler control valves.

Supervisory signals are not intended to provide indication of design, installation, or functional defects in the supervised systems or system components and are not a substitute for regular testing of those systems in accordance with the applicable standard. Supervised conditions should include, but not be limited to, the following:

(1) Control valves 1½ in. (38.1 mm) or larger
(2) Pressure, including dry pipe system air, pressure tank air, preaction system supervisory air, steam for flooding systems, and public water
(3) Water tanks, including water level and temperature
(4) Building temperature, including areas such as valve closet and fire pump house
(5) Electric fire pumps, including running (alarm or supervisory), power failure, and phase reversal
(6) Engine-driven fire pumps, including running (alarm or supervisory), failure to start, controller off "automatic," and trouble (e.g., low oil, high temperature, overspeed)
(7) Steam turbine fire pumps, including running (alarm or supervisory), steam pressure, and steam control valves

FAQ Does *NFPA 72* require sprinkler system supervision?

The requirement for supervision of sprinkler system functions comes from other codes and standards and not directly from *NFPA 72*. For example, NFPA *101* requires that sprinkler systems in some occupancies be electrically supervised by the building fire alarm system. Other model building codes require that all sprinkler systems have their waterflow and valves electrically supervised. If there were no building fire alarm system, then a dedicated function fire alarm system designated as a "sprinkler waterflow and supervisory system" would be installed to comply with the supervision and monitoring requirements. See the following excerpt from NFPA *101*, which shows the general requirement for supervision and the minimum features to be monitored. Note that requirements of other codes and standards may be different.

NFPA *101* (2018)

9.7.2.1* Supervisory Signals.

A.9.7.2.1 *NFPA 72* provides details of standard practice in sprinkler supervision. Subject to the approval of the authority having jurisdiction, sprinkler supervision is also permitted to be provided by direct connection to municipal fire departments or, in the case of very large establishments, to a private headquarters providing similar functions. *NFPA 72* covers such matters. System components and parameters that are required to be monitored should include, but should not be limited to, control valves, water tank levels and temperatures, tank pressure, and air pressure on dry-pipe valves.

Where municipal fire alarm systems are involved, reference should also be made to NFPA 1221.

9.7.2.1.1 Where supervised automatic sprinkler systems are required by another section of this *Code*, supervisory attachments shall be installed and monitored for integrity in accordance with *NFPA 72* and a distinctive supervisory signal shall be provided to indicate a condition that would impair the satisfactory operation of the sprinkler system.

9.7.2.1.2 Supervisory signals shall sound and shall be displayed either at a location within the protected building that is constantly attended by qualified personnel or at an approved, remotely located receiving facility.

Probably the most important fire suppression system feature monitored by the fire alarm system is the position of sprinkler and fire protection water supply control valves. NFPA 13 requires supervision of these control valves, but supervision by a fire alarm system is only one of the permitted choices. The following excerpt shows all the methods recognized by NFPA 13 for supervision of sprinkler control valves. Also see A.8.16.1.1.2 in NFPA 13 for extensive explanatory material addressing valve supervision. Note that some applications described in NFPA 13 (e.g., 11.2.2.5, 11.2.3.1.3) may require supervisory device electrical supervision. Although *NFPA 72* does not require the supervision of sprinkler control valves or other features essential for the operation of fire suppression systems, electrical supervision provides continuous information to facility management concerning the status of monitored fire protection and life safety systems.

NFPA 13 (2016)

8.16.1.1.2* Supervision.

8.16.1.1.2.1 Valves on connections to water supplies, sectional control and isolation valves, and other valves in supply pipes to sprinklers and other fixed water-based fire suppression systems shall be supervised by one of the following methods:

(1) Central station, proprietary, or remote station signaling service
(2) Local signaling service that will cause the sounding of an audible signal at a constantly attended point
(3) Valves locked in the correct position
(4) Valves located within fenced enclosures under the control of the owner, sealed in the open position, and inspected weekly as part of an approved procedure

8.16.1.1.2.2 Floor control valves in high-rise buildings and valves controlling flow to sprinklers in circulating closed loop systems shall comply with 8.16.1.1.2.1(1) or 8.16.1.1.2.1(2).

8.16.1.1.2.3 The requirements of 8.16.1.1.2.1 shall not apply to underground gate valves with roadway boxes.

Exhibit 23.9 shows examples of control valves. Exhibit 23.10 is an example of a control valve supervisory switch, and Exhibit 23.11 is an example of a high-low-pressure switch for supervising suppression system pressure.

EXHIBIT 23.9

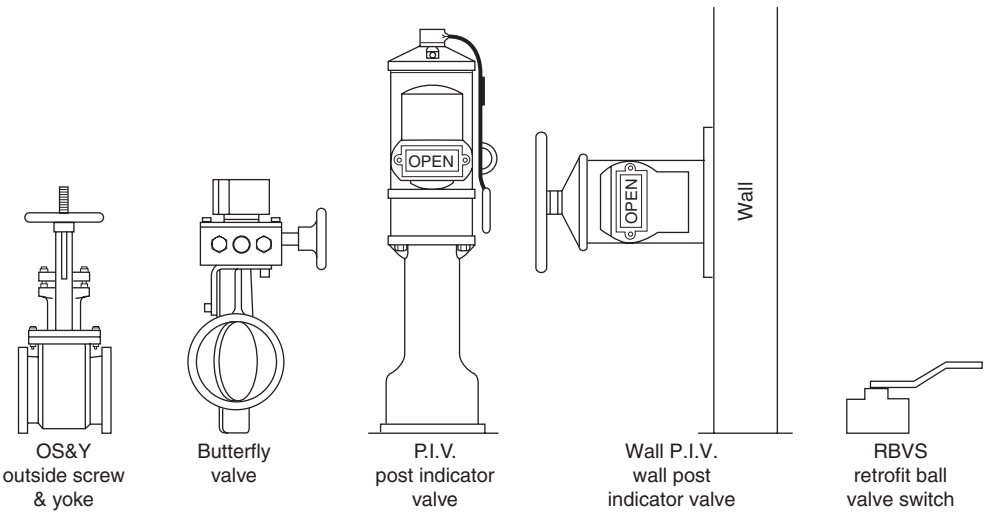

Sprinkler and Water Supply Control Valves. (Source: Potter Electric Signal Company, LLC, St. Louis, MO)

EXHIBIT 23.10

Control Valve Supervisory Switch. (Source: Potter Electric Signal Company, LLC, St. Louis, MO)

EXHIBIT 23.11

High-Low-Pressure Supervisory Switch. (Source: Potter Electric Signal Company, LLC, St. Louis, MO)

23.8.5.6.1 Where required by other governing laws, codes, or standards to be electronically monitored, supervisory signal–initiating devices shall be connected to a dedicated function fire alarm control unit designated as "sprinkler waterflow and supervisory system" and permanently identified on the control unit and record drawings.

N **23.8.5.6.2** Supervisory signal–initiating devices connected to a building alarm system shall not be required to meet the requirements of 23.8.5.6.1.

Where other codes, standards, or authorities having jurisdiction require the supervision of automatic sprinkler systems, a dedicated function FACU is used (designated as a "sprinkler waterflow and supervisory system"). This requirement assumes that there is no building fire alarm system. A dedicated function FACU is required only if there is no building fire alarm system. The installation of a dedicated function FACU does not trigger a requirement for a building fire alarm system.

23.8.5.6.3* The number of supervisory signal–initiating devices permitted to be connected to a single initiating device circuit shall not exceed 20.

A.23.8.5.6.3 Circuits connected to a signaling line circuit interface are initiating device circuits and are subject to these limitations.

Supervisory signal–initiating devices include valve supervisory switches, air pressure switches, building temperature switches, fire protection water tank level and temperature switches, and other devices that are designed to ensure that fire protection and life safety features are in service at the time of a fire.

See the definitions of the terms *supervisory signal initiating device* and *supervisory signal* in 3.3.141.5 and 3.3.263.9.

Up to 20 supervisory signal–initiating devices are permitted on a single initiating device circuit, which could be the initiating device circuit of an addressable monitor module, because doing so does not degrade the reliability or operability of the fire alarm system. Site-specific needs and conditions might dictate that a circuit serve fewer devices. For example, if a facility has 20 sprinkler control valves each equipped with a supervisory switch, all the valve supervisory switches could be connected to the same initiating device circuit and still comply with the Code. However, if a supervisory signal were received, it would require that someone check every valve to find the one initiating the signal.

23.8.5.6.4* If a valve is installed in the connection between a sprinkler system and an initiating device, the valve shall be supervised in accordance with 17.17.1 unless the valve is arranged to cause operation of the supervisory signal initiating device when it is in its off-normal position.

A.23.8.5.6.4 Some ball valves installed on air pressure lines connected to a pressure switch for dry pipe sprinkler systems or certain types of preaction sprinkler systems will cause the air pressure that is trapped in the line between the valve and the supervisory signal initiating device to bleed off when the valve is turned to isolate the initiating device. This will cause the initiating device to operate and signal the low air supervisory condition. The arrangement is permitted by other standards and provides a fail-safe way to test a low air pressure signal without risking activation of the system.

In 23.8.5.5.4, the valve installed between the sprinkler system and an initiating device is required to be supervised in accordance with 17.17.1. Paragraph 23.8.5.6.4 provides an exception to the valve supervision requirement where the valve is arranged to cause operation of the supervisory signal initiating device when not in its normal position.

23.8.5.7 Alarm Signal Initiation — Fire Suppression Systems Other Than Sprinklers.

23.8.5.7.1 Where required by other governing laws, codes, or standards to be monitored and a building fire alarm system is installed, the actuation of a fire suppression system shall annunciate an alarm or supervisory condition at the building fire alarm control unit.

If the suppression system is required to be monitored and if a building fire alarm system is installed, the actuation of a fire suppression system is required to annunciate an alarm or supervisory condition at the building FACU. The authority having jurisdiction has the flexibility to permit either an alarm or a supervisory signal to be sent to the building FACU, depending on the fire safety objectives of the suppression system. For example, the actuation of a suppression system on an industrial process where fires are a routine part of the operation could provide a supervisory condition to be transmitted rather than an alarm. Some printing operations may experience frequent fires that are quickly extinguished by a carbon dioxide fire suppression system without ensuing damage and without sounding a general alarm throughout the facility. It should be noted that the actuation of most gaseous suppression systems is performed through a releasing system FACU, a control unit that is required by 23.8.2.1 and 23.8.2.2 to be monitored by the building fire alarm system, if present.

The need to monitor the suppression system is generally established by the requirements of other codes or sources in the framework described in the commentary following 23.8.5. Documents such as NFPA *101* include requirements for these types of extinguishing systems to interface with the building fire alarm system. The following is an excerpt from NFPA *101*.

NFPA *101* (2018)

9.8 Other Automatic Extinguishing Equipment.

9.8.1* Alternative Systems. In any occupancy where the character of the fuel for fire is such that extinguishment or control of fire is accomplished by a type of automatic extinguishing system in lieu of an automatic sprinkler system, such extinguishing system shall be installed in accordance with the applicable standard referenced in Table 9.8.1.

TABLE 9.8.1 *Fire Suppression System Installation Standards*

Fire Suppression System	*Installation Standard*
Low-, medium-, and high-expansion foam systems	NFPA 11, *Standard for Low-, Medium-, and High-Expansion Foam*
Carbon dioxide systems	NFPA 12, *Standard on Carbon Dioxide Extinguishing Systems*
Halon 1301 systems	NFPA 12A, *Standard on Halon 1301 Fire Extinguishing Systems*
Water spray fixed systems	NFPA 15, *Standard for Water Spray Fixed Systems for Fire Protection*
Deluge foam-water sprinkler systems	NFPA 16, *Standard for the Installation of Foam-Water Sprinkler and Foam-Water Spray Systems*
Dry chemical systems	NFPA 17, *Standard for Dry Chemical Extinguishing Systems*
Wet chemical systems	NFPA 17A, *Standard for Wet Chemical Extinguishing Systems*
Water mist systems	NFPA 750, *Standard on Water Mist Fire Protection Systems*
Clean agent extinguishing systems	NFPA 2001, *Standard on Clean Agent Fire Extinguishing Systems*

9.8.2 Alarm Activation.

9.8.2.1 If the extinguishing system is installed in lieu of a required, supervised automatic sprinkler system, the activation of the extinguishing system shall activate the building fire alarm system, where provided.

9.8.2.2 The actuation of an extinguishing system that is not installed in lieu of a required, supervised automatic sprinkler system shall be indicated at the building fire alarm system, where provided.

Automatic fire suppression systems other than sprinklers have an NFPA standard that covers the design, installation, testing, and maintenance of the system. For example, NFPA 17, *Standard for Dry Chemical Extinguishing Systems,* and NFPA 17A, *Standard for Wet Chemical Extinguishing Systems,* specifically require that each of these types of systems connect to a fire alarm system, if one is present.

23.8.5.7.2 The integrity of each fire suppression system actuating device and its circuit shall comply with 12.6.1, 12.6.2, and other applicable NFPA standards.

The actuation circuit for the fire suppression system must be monitored for integrity the same as any other fire alarm circuit. Any fault conditions on the releasing service FACU must initiate a trouble signal on the releasing service FACU but will initiate a supervisory signal on the building FACU if one is present. Also see the requirements of 23.11.3 and 23.11.10.

23.8.5.7.3 If a valve is installed in the connection between a suppression system and an initiating device, the valve shall be supervised in accordance with 17.17.1.

23.8.5.8* Supervisory Signal Initiation — Fire Suppression Systems Other Than Sprinklers.

FAQ Does *NFPA 72* require supervision of fire suppression systems other than sprinklers?

The requirement for fire alarm system inputs from supervisory signal–initiating devices is established by the requirements of other codes or sources. *NFPA 72* does not require this supervision. See the commentary following 23.8.5.

A.23.8.5.8 See A.23.8.5.6.

23.8.5.8.1 Where required to be monitored and a building fire alarm system is installed, an off-normal condition of a fire suppression system shall annunciate a supervisory condition at the building fire alarm control unit.

If the suppression system is required by another code or standard to be monitored and if a building fire alarm system is installed, any off-normal condition is required to be transmitted as a supervisory signal to the building FACU. See the commentary following 23.8.2.7.

23.8.5.8.2 Supervisory signals that latch in the off-normal state and require manual reset of the system to restore them to normal shall be permitted.

Supervisory signals usually restore automatically when the off-normal condition is restored to a normal state. In some cases, having supervisory signals "latch" in the off-normal position can be beneficial. See 10.14.1 and 10.14.2. A latching supervisory signal requires manual reset of the system after restoration of the off-normal condition.

23.8.5.8.3 If a valve is installed in the connection between a suppression system and an initiating device, the valve shall be supervised in accordance with 17.17.1.

23.8.5.9 Signal Initiation — Fire Pump.

The installation requirements for fire pumps are in NFPA 20, *Standard for the Installation of Stationary Pumps for Fire Protection,* which requires certain functions to be monitored and signals to be sent to a constantly attended location. See the following excerpt from NFPA 20. NFPA 20 does not require these conditions to be monitored by a fire alarm system, but a dedicated function fire alarm system or building fire alarm system could be used to accomplish this monitoring. Monitored signals could include fire pump running, fire pump ac power loss, fire pump phase reversal, and fire pump alternate power source.

23.8.5.9.1 Where fire pumps are required to be monitored and a building fire alarm system is installed, a pump running signal shall be permitted to be a supervisory or alarm signal.

NFPA 20 (2019)

10.4.7* Fire Pump Alarm and Signal Devices Remote from Controller.

A.10.4.7 Where unusual conditions exist whereby pump operation is not certain, a "failed-to-operate" fire pump alarm is recommended. In order to supervise the power source for the fire pump alarm circuit, the controller can be arranged to start upon failure of the supervised alarm circuit power.

10.4.7.1 Where the pump room is not constantly attended, audible or visible signals powered by a separate reliable supervised source not exceeding 125 V shall be provided at a point of constant attendance.

10.4.7.2 These fire pump alarms and signals shall indicate the information in 10.4.7.2.1 through 10.4.7.2.6.

10.4.7.2.1 Pump or Motor Running. The signal shall actuate whenever the controller has operated into a motor-running condition.

10.4.7.2.2 Loss of Phase.

10.4.7.2.2.1 The fire pump alarm shall actuate whenever any phase at the line terminals of the motor contactor is lost.

10.4.7.2.2.2 All phases shall be monitored, which detects loss of phase whether the motor is running or at rest.

10.4.7.2.2.3 When power is supplied from multiple power sources, monitoring of each power source for phase loss shall be permitted at any point electrically upstream of the line terminals of the contactor, provided all sources are monitored.

10.4.7.2.3 Phase Reversal. The fire pump alarm shall actuate whenever the three-phase power at the line terminals of the motor contactor is reversed.

10.4.7.2.4 Controller Connected to Alternate Source. Where two sources of power are supplied to meet the requirements of 9.3.2, this signal shall indicate whenever the alternate source is the source supplying power to the controller.

10.4.7.2.5 Alternate Source Isolating Switch or Circuit Breaker Open. Where two sources of power are supplied to meet the requirements of 9.3.2, a signal shall be provided to indicate that the alternate source isolating switch or circuit breaker is open or tripped.

10.4.7.2.6 Controller or System Trouble. A controller or system trouble alarm shall actuate whenever a ground-fault signal, when provided *(see 10.4.5.9)*, a pressure-sensing device signal *(see 10.5.2.1.3.1 and 10.5.2.1.3.2)*, a variable speed trouble signal, or a fail-to-start signal *(see 10.5.2.7.5)* occurs.

23.8.5.9.2 Where fire pumps are required to be monitored and a building fire alarm system is installed, signals other than pump running shall be supervisory signals.

In contrast to the pump running signal, which is permitted to be a supervisory or an alarm signal, any other fire pump signal monitored by a building fire alarm system must be a supervisory signal.

23.8.5.10 Fire Alarm and Supervisory Signal Initiation — Releasing Fire Alarm Systems.

23.8.5.10.1 Releasing service fire alarm control units shall be connected to the protected premises fire alarm system.

23.8.5.10.2 Fire alarm and supervisory signals generated at the releasing service fire alarm control unit shall be annunciated at a protected premises fire alarm unit.

23.8.5.10.3 Where required by other governing laws, codes, or standards, actuation of any suppression system connected to a releasing service fire alarm control unit shall be annunciated at the protected premises fire alarm control unit, even where the system actuation is by manual means or otherwise accomplished without actuation of the releasing service fire alarm control unit.

Subsection 23.11.1 requires FACUs used for automatic or manual activation of a fire suppression system to be listed for releasing service. The term *releasing service fire alarm control unit* is defined as a subdefinition of *protected premises (local) control unit* (see 3.3.108.2.2). The requirements in 23.8.5.10.1, 23.8.5.10.2, and 23.8.5.10.3 correlate with the requirements in 23.8.2.1, 23.8.2.2, and 23.11.10. In addition, 23.8.5.10.3 includes a requirement to annunciate the actuation of the suppression system at the protected premises FACU even where the actuation is not accomplished through the connected releasing service control unit.

Each input to the fire alarm system corresponding to the operation of an automatic fire suppression system should be configured as a separate zone or discrete point to allow identification of the system involved. For example, if a building is equipped with a clean agent suppression system in a computer room and a wet chemical system in the kitchen, each system should have separate signals.

23.8.5.10.4 If a valve is installed in the connection between a suppression system and an initiating device, the valve shall be supervised in accordance with Chapter 17.

In this case, supervision of the valve means monitoring the status of the valve and initiating a supervisory signal when the valve is moved to an off-normal (other than fully open) position. When the valve returns to its normal (fully open) position, the supervisory device initiates a restoration-to-normal signal. Supervision is required for any valve that if closed could prevent actuation of the alarm initiating device. The alarm initiating device is usually a pressure switch that actuates when the fire suppression system actuates.

23.8.5.10.5 In facilities that are not required to install a protected premises fire alarm system, the alarm and supervisory devices shall be connected to the releasing service fire alarm control unit, and their actuation shall be annunciated at the releasing service control unit.

Suppression system alarm and supervisory devices need to be connected to an FACU. When a building FACU is not required, these devices need to be connected to the releasing service FACU. See 3.3.108.2.2 for the definition of the term *releasing service fire alarm control unit*.

***23.8.5.11 Trouble Signal Initiation.**

N **23.8.5.11.1** Automatic fire suppression system alarm-initiating devices and supervisory signal–initiating devices and their circuits shall be designed and installed so that they cannot be subject to tampering, opening, or removal without initiating a signal.

N **23.8.5.11.2** Covers of junction boxes inside of buildings shall not be required to meet the requirements of 23.8.5.11.1.

N **23.8.5.11.3** The requirements of 23.8.5.11.1 shall apply to junction boxes and device covers installed outside of buildings to facilitate access to the initiating device circuit unless tamper-resistant screws or other approved mechanical means are used for preventing access.

Automatic fire suppression system initiating devices and their circuits that cause an alarm signal or a supervisory signal to be annunciated on the fire alarm are required to be designed such that they cannot be tampered with without causing an off-normal signal on the fire alarm and signaling system. Consider, for example, a valve supervisory switch installed outside of the building on a post indicator valve (PIV), in which the supervisory switch is mounted outside on the PIV. The initiating device circuit from an FACU or from an addressable monitor module would extend into a junction box where the connections to the supervisory switch are made. This junction box installed outside a building must be equipped with tamper-resistant screws or some other mechanical means preventing access to the junction box, or it must have a device to initiate a trouble signal when the box is opened. This precaution minimizes the possibility that unauthorized individuals can bypass the supervision of fire suppression systems by tampering with the wiring in junction boxes. Paragraph 23.8.5.11.2 exempts junction boxes within a building, because this area should be under the general supervision of the building owner or occupant and not subject to tampering by outsiders.

23.8.5.11.4 The integrity of each fire suppression system actuating device and its circuit shall be supervised in accordance with 12.6.1 and 12.6.2 and with other applicable NFPA standards.

N **23.8.5.12 Disconnect Switches and Disable Functions.** Operation of any disconnect switch or disable function associated with the fire alarm system, when in the off-normal condition, shall be indicated at the building fire alarm control unit or at a dedicated function(s) fire alarm control unit if provided.

A fire suppression disable function or disconnect switch is often provided to allow inspection and maintenance activities of the fire suppression system and avoid an accidental discharge of the system. These are permitted if they are monitored by an FACU and reflect an off-normal or supervisory signal at the control unit. This function is required to reduce the risk of the disable function or disconnect switch from being left in the off-normal position.

NFPA 720

23.8.6 Alarm System Notification Outputs.

23.8.6.1 Occupant Notification.

FAQ Is occupant notification required for every fire alarm system?

System Design Tip

Occupant notification is not a required output action of every fire alarm system installed in accordance with this chapter. Notification to building occupants is required when a function of the fire alarm system is to provide evacuation or relocation. The requirements for occupant notification and whether it is public mode, private mode, or coded notification come from the local building code, NFPA *101*, or the system designer (where required to meet the performance goals of a nonrequired system). When a function of the protected premises fire alarm system is to notify the occupants, Chapter 18 requirements for public mode signaling must be followed.

N **23.8.6.1.1** Fire alarm systems provided for evacuation or relocation of occupants shall have one or more notification appliances listed for the purpose in each notification zone of the building and be so located that they have the characteristics described in Chapter 18 for public mode or private mode, as required.

N **23.8.6.1.2** Except as permitted in 23.8.6.1.3, occupant notification of carbon monoxide systems shall be throughout the protected premises.

When CO, known as the odorless killer, is detected, the primary intent is to notify all building occupants and initiate building evacuation throughout the protected premises. Paragraph 23.8.6.1.3 provides an alternative to complete occupant notification, but other notification features are required.

N **23.8.6.1.3** Where carbon monoxide alarm signals are transmitted to a constantly attended on-site location or off-premises location in accordance with this chapter, selective public mode occupant notification shall be permitted to be limited to the notification zone encompassing the area where the carbon monoxide alarm signal was initiated.

Complete occupant notification of the protected premises is not required if the CO alarm signals are transmitted to a constantly attended off-site location. Furthermore, notification is permitted to be on an individual notification zone basis as long as the CO alarm signals are transmitted to a constantly attended off-site location. These individual notification zones should be coordinated with the emergency response plan, evacuation plan, fire safety plan, or other similar document.

23.8.6.2* Notification Appliances in Exit Stair Enclosures, Exit Passageways, and Elevator Cars. Notification appliances shall not be required in exit stair enclosures, exit passageways, and elevator cars in accordance with 23.8.6.2.1 through 23.8.6.2.4 unless required by other codes and standards.

Exit stair enclosures, exit passageways, and elevator cars are exempt from the requirements for installation of audible and visual notification appliances used to signal evacuation. Some of the allowances addressed in 23.8.6.2 may be provided by other codes and standards. For example, 9.6.3.6.4 and 9.6.3.6.5 of NFPA *101* permit the exclusion of the general evacuation signal in exit stair enclosures and in elevator cars.

The purpose of a fire alarm system is to alert occupants of the need to move to enclosed exits from which they can exit the building safely. Once occupants have entered an exit stair enclosure or an exit passageway, there is no need to continue notification. If occupants are in an exit stair enclosure or exit passageway when the fire alarm system is actuated, they will hear and see the fire alarm notification appliances as soon as they open the stairwell door to a floor of the building. Occupants in an exit passageway are already in a protected enclosure that will lead them to the building exterior or to a horizontal exit to an adjacent building. Note that these requirements apply to evacuation signals.

Loudspeakers may still be required in the exit stair in some buildings to facilitate communication by the incident commander with those occupants in the exit stair enclosures. In buildings that contain an in-building fire EVAC system, exit stair enclosures will be included as manual paging zones.

A.23.8.6.2 The general purpose of the fire alarm audible and visual notification appliances is to alert occupants that there is a fire condition and for occupants to exit from the building.

Once the occupants are in the exit enclosures, high noise levels and light intensity from notification appliances could cause confusion and impede egress. There could be conditions that warrant the installation of notification appliances in exit passageways, but careful analysis is necessary to avoid impeding exiting from the building.

23.8.6.2.1 Visual signals shall not be required in exit stair enclosures and exit passageways.

Flashing visual notification appliances installed in exit stair enclosures and exit passageways could cause visual orientation problems as people attempt to exit. Also, as explained in the commentary following 23.8.6.2, continuing notification for occupants who already have entered the means of egress is not generally necessary. The exclusion of exit stair enclosures and exit passageways may be provided to some extent by other codes and standards. For example, 9.6.3.5.5 of NFPA *101* permits the exclusion of visual signals in exit stair enclosures.

23.8.6.2.2 Visual signals shall not be required in elevator cars.

A visual notification appliance installed in an elevator car does not serve to make the occupants safer. Once occupants are in the elevator car, they cannot take any action to exit the building until the elevator car stops. When the doors open at a floor, the occupants will see the visual notification appliances operating on that floor and can take appropriate action. The exclusion of elevator cars may be provided to some extent by other codes and standards. For example, 9.6.3.5.6 of NFPA *101* permits the exclusion of visual signals in elevator cars.

23.8.6.2.3 The emergency evacuation signal specified in 18.4.2 shall not be required to automatically operate in exit stair enclosures and exit passageways.

Once occupants have entered an exit stair enclosure or exit passageway, they do not need to continue to hear the audible alarm signal. The reverberation of the evacuation signal in a closed, masonry stair enclosure can create an environment in which the sound pressure level in the enclosure causes the occupants to move away from the noise and exit the enclosure. This effect is exactly the opposite desired for a fire alarm system. Situations may occur in which notification appliances in exit enclosures might be desirable, such as a fire-rated corridor that serves as an exit enclosure in a health care occupancy. The exclusion of exit stair enclosures and exit passageways may be provided to some extent by other codes and standards. For example, 9.6.3.6.4 of NFPA *101* permits the exclusion of the general evacuation signal in exit stair enclosures.

23.8.6.2.4 The emergency evacuation signal specified in 18.4.2 shall not be required to automatically operate in elevator cars.

An audible fire alarm signal in an elevator car does not serve to make the occupants safer. Once occupants are in the elevator car, they cannot take any action to exit the building until the elevator car stops. When the doors open at a floor, the occupants will hear the alarm signal on that floor and can take appropriate action. The exclusion of elevator cars may be provided to some extent by other codes and standards. For example, 9.6.3.6.5 of NFPA *101* permits the exclusion of the general evacuation signal in elevator cars.

23.8.6.3 Notification Zones.

23.8.6.3.1 Notification zones shall be consistent with the emergency response or evacuation plan for the protected premises.

The best fire detection and alarm technology alone does not ensure an adequate level of fire safety in a building. A building evacuation or relocation plan is needed for every building to establish effective notification zones. This plan must be custom developed based on the site-specific needs of the facility, site-specific conditions, and the established fire safety objectives. The establishment of notification zones without a fully developed building evacuation or relocation plan is not possible. NFPA *101* includes requirements for evacuation, relocation plans, and fire drills for many occupancies. These requirements must be incorporated in the plan for the building.

23.8.6.3.2 The boundaries of fire alarm notification zones shall be coincident with building outer walls, building fire or smoke compartment boundaries, floor separations, or other fire safety subdivisions.

FAQ What is a notification zone?

The term *notification zone* is defined in 3.3.328.1 as, "a discrete area of a building, or defined area outside a building, in which people are intended to receive common notification." The boundaries described in 23.8.6.3.2 provide further definition. A notification zone can contain multiple notification appliance circuits, but all notification appliances within a notification zone must actuate simultaneously. The term *signaling zone* is defined in 3.3.328.2 as, "an area consisting of one or more notification zones where identical signals are activated simultaneously."

N **23.8.6.3.3*** The boundaries of carbon monoxide alarm notification zones shall be coincident with the area where the alarm initiation originated and other notification zones in accordance with the building's emergency response plan.

The boundaries of the individual notification zones should be coordinated with the emergency response plan, evacuation plan, fire safety plan, or other similar document. Significant thought and consideration should be used when establishing these individual notification zones to ensure that the occupant notification will be consistent with the zone where the CO is created and could transfer to. For example, if a multilevel facility has gas-fired equipment and CO detection in the basement that serves only the basement, then it may be appropriate to consider the basement as a separate occupant notification zone. However, if there is potential for the CO in the basement to be transferred to the upper levels of the facility via the HVAC equipment or other means, those other adjacent levels should be considered as part of the same occupant notification zone as the basement level.

N **A.23.8.6.3.3** The building's emergency response plan might specify occupant notification only in the area(s) of initiation and at the control panel. Whole building evacuation might not be specified in the emergency response plan.

The development of the emergency response plan, evacuation plan, fire safety plan, or other similar document should be consistent with how the evacuation of the facility is to be performed and should also correspond with the respective occupant notification zones.

23.8.6.4 Circuits for Addressable Notification Appliances.

23.8.6.4.1 Circuit configuration for addressable notification appliances shall comply with the applicable performance requirements for notification zones.

23.8.6.4.2 Where there are addressable notification appliances on a signaling line circuit that serves different notification zones, a single open, short-circuit, or ground on that signaling line circuit shall not affect operation of more than one notification zone.

Addressable SLCs must be arranged such that a single fault condition on the circuit does not disrupt the operation of notification appliances in more than one notification zone.

23.8.6.4.3 Riser conductors installed in accordance with 24.4.8.6.3 that are monitored for integrity shall not be required to operate in accordance with 23.8.6.4.2.

23.9 In-Building Emergency Voice/Alarm Communications.

23.9.1 In-building fire emergency voice/alarm communications shall meet the requirements of Chapter 24.

NFPA 720

N **23.9.2** Where a voice/alarm communications system is installed for the purpose of occupant notification related to carbon monoxide detection, it shall meet the requirements of Section 24.4 excluding the requirements of 24.4.8.6.

Where used, prerecorded voice messages for CO occupant notification should be prepared in accordance with this Code by persons who are experienced with the operation of the building fire emergency alarm system and are knowledgeable of the buildings, construction, layout, and fire protection plan, including evacuation procedures. The proposed prerecorded voice messages should be approved by the authority having jurisdiction. Persons who record the messages should be able to read and speak the language of the message clearly, concisely, and without an accent that would have an adverse effect on intelligibility. Furthermore, it would be expected that the four-pulse temporal pattern alert tone would be used before playing the prerecorded CO occupant notification voice message through the loudspeakers.

23.9.3 All live voice communications systems shall meet the requirements of Chapter 24.

23.9.4 Two-Way Communication Service. Two-way communication service shall meet the requirements of Chapter 24.

Two-way communication service within a building provides a reliable method for fire fighters and other emergency response personnel to communicate with each other during the course of an emergency. Two means are recognized: two-way in-building wired ECSs (telephones) and two-way radio communications enhancement systems. The requirements for ECSs are covered in Chapter 24.

23.10 Fire Alarm Systems Using Tone.

23.10.1 The requirements of Section 23.10 shall apply to tone and visual notification appliance circuits.

N **23.10.2*** Fire alarm systems used for partial evacuation and relocation shall be designed and installed such that attack by fire within a notification zone shall not impair control and operation of the notification appliances outside that notification zone.

N **A.23.10.2** One or more of the following means might be considered acceptable to provide a level of survivability consistent with the intent of this requirement:

(1) Installing a fire alarm system in a fully sprinklered building in accordance with NFPA 13
(2) Routing notification appliance circuits separately
(3) Using short-circuit fault-tolerant signaling line circuits for controlling evacuation signals

The requirement for notification appliances to operate in those notification zones that are not attacked by fire will also require that circuits and equipment that are common to more than one signaling zone be designed and installed such that the fire will not disable them. For instance, a signaling line circuit used to control notification appliances in multiple notification zones should be properly designed and installed so that one fire would not impair more than one notification zone. Power supply requirements of Chapter 10 apply to these systems. The secondary power supply requirements of that chapter meet the intent of these survivability requirements.

FAQ

What is required for wiring or communication paths to ensure compliance with 23.10.2?

Subsection 23.10.2 requires that the circuits, wiring, or communication paths to each signaling zone be arranged such that damage to the paths in one signaling zone will not impair communication to any other signaling zone. For example, consider each floor in a high-rise building to be a signaling zone. A circuit that feeds the notification appliances on the fifth floor of a building must be arranged so that damage to that circuit does not affect communication to any other floor above or below. An evaluation based on the path performance as required by governing laws, codes, standards, and a site-specific engineering analysis is required to be followed (see 23.4.3.1).

N **23.10.3** Performance features provided to ensure survivability shall be described and technical justification provided in the documentation submitted to the authority having jurisdiction with the evaluation required in 23.4.3.1.

Circuits that need a level of survivability as required by other sections of this Code must be described and provided with technical justification and submitted to the authority having jurisdiction. It is best to capture this type of justification and documentation on the design documents so it can be conveyed clearly to the construction team to ensure that the appropriate level of survivability is achieved for those circuits.

23.10.4 Loudspeakers that transmit tone signals shall be permitted to be used as fire alarm notification appliances.

23.11 Suppression System Actuation.

See Exhibit 23.12 for an example of one type of suppression system — a wet chemical kitchen hood and duct cylinder with control head.

23.11.1 Releasing service fire alarm control units used for automatic or manual activation of a fire suppression system shall be listed for releasing service.

23.11.2 Releasing devices for suppression systems shall be listed for use with releasing service control units.

23.11.3 Each releasing device (e.g., solenoid, relay) shall be monitored for integrity (supervised) in accordance with applicable NFPA standards.

23.11.4 The installation wiring shall be monitored for integrity in accordance with the requirements of Section 12.6.

23.11.5 Releasing service fire alarm systems used for fire suppression–releasing service shall be provided with a disconnect switch to allow the system to be tested without actuating the fire suppression systems.

23.11.5.1 Operation of a disconnect switch or a disable function shall cause a supervisory signal at the releasing service fire alarm control unit.

23.11.5.2 The disconnect shall be a physical switch and not be accomplished by using software.

EXHIBIT 23.12

Wet Chemical Kitchen Hood and Duct Cylinder with Control Head. (Source: Kidde Fire Systems, Ashland, MA)

FAQ What means must be used to ensure that the suppression system will not be actuated inadvertently?

The requirements of 23.11.5 are extremely important. Very often, the contractor testing the fire alarm system is not an expert in the operation of fire suppression systems. The supervised disconnect switch allows the fire alarm system contractor to perform maintenance or tests on the fire alarm system without inadvertently actuating the suppression system. See Exhibit 23.13.

The disconnect switch is required to be a physical switch and cannot be accomplished by software. Operation of the switch must provide a supervisory signal at the building FACU. This requirement minimizes the possibility of leaving the fire suppression system impaired after the testing of the fire alarm system is complete. Also see testing requirements for releasing systems in 14.2.6.

EXHIBIT 23.13

Suppression System Disconnect Switch. (Source: Fike Corporation, Blue Springs, MO)

23.11.5.3 Software disconnects, even if actuated by dedicated buttons or key switches, shall not be permitted as a method to secure a suppression system from inadvertent discharge.

23.11.6 Sequence of operation shall be consistent with the applicable suppression system standards.

The exact operating sequence of a fire suppression system depends on the type of system, the application, and site-specific conditions. The specific sequence of operation of any type of fire suppression system is not addressed in *NFPA 72*. The appropriate NFPA standard for the particular fire suppression system should be consulted.

23.11.7* Each space protected by an automatic fire suppression system actuated by the fire alarm system shall contain one or more automatic fire detectors installed in accordance with Chapter 17.

A.23.11.7 Automatic fire suppression systems referred to in 23.11.7 include, but are not limited to, preaction and deluge sprinkler systems, carbon dioxide systems, Halon systems, and dry chemical systems.

23.11.8 Suppression systems or groups of systems shall be controlled by a single releasing service fire alarm control unit that monitors the associated initiating device(s), actuates the associated releasing device(s), and controls the associated agent release notification appliances.

Unless the conditions of 23.11.9 have been met, a single control unit must be used to control suppression systems. This requirement prohibits an arrangement where the control unit used to actuate the suppression system is listed for releasing service, but it receives its signal to actuate from another FACU that is not listed for releasing service and that monitors the associated alarm initiating devices. Several instances have occurred in which inadvertent system discharges resulted from multitier releasing arrangements. Inadvertent discharges occurred during normal system testing and maintenance and occasionally because of system wiring faults unrelated to the required operation of the releasing system.

Although the use of multiple control units is prohibited (unless 23.11.9 applies), the premises FACU is required to monitor the suppression system control unit if one is present. The interconnection of a fire suppression system control unit with a protected premises FACU must comply with the requirements of 23.8.2. The premises FACU must not affect the operation of the suppression system. Also see the requirements for releasing service FACUs in 23.8.5.10.

23.11.9 If the configuration of multiple control units is listed for releasing device service, and if a trouble condition or manual disconnect on either control unit causes a trouble or supervisory signal, the initiating device on one control unit shall be permitted to actuate releasing devices on another control unit in lieu of 23.11.8.

23.11.10 If the releasing service fire alarm control unit is located in a protected premises having a separate fire alarm system, it shall be monitored for alarm, supervisory, and trouble signals, but shall not be dependent on or affected by the operation or failure of the protected premises fire alarm system.

23.11.11 Releasing fire alarm systems performing suppression system releasing functions shall be installed in such a manner that they are effectively protected from damage caused by activation of the suppression system(s) they control.

The control unit must be sealed or enclosed in a cabinet designed to prevent entry of the extinguishing agent, or the control unit must be located outside the discharge area of the fire suppression system.

23.12 Off-Premises Signals.

23.12.1 Systems requiring transmission of signals to continuously attended locations providing supervising station service (e.g., central station, proprietary supervising station, remote supervising station) shall also comply with the applicable requirements of Chapter 26.

23.12.2 Relays or modules providing transmission of trouble signals to a supervising station shall be arranged to provide fail-safe operation.

23.12.3 Means provided to transmit trouble signals to supervising stations shall be arranged so as to transmit a trouble signal to the supervising station for any trouble condition received at the protected premises control unit, including loss of primary or secondary power.

23.12.4* It shall be permitted to provide supplementary transmission of real-time data from the fire system to off-premises equipment.

A.23.12.4 Off-site logging of fire alarm data can be useful to preserve information in the face of fire or building failure to facilitate accurate reconstruction of the event. It can also be beneficial to send data off-premises to incident command personnel to enhance situational awareness and response decisions and to maintain safe and efficient operations. Figure A.23.12.4 shows an example of a network to accomplish these goals.

23.12.4.1 Transmission of real-time data off-premises shall not affect the operation or response of the fire alarm control unit.

23.12.4.2 Any data transmitted shall be consistent with the data generated by the system.

23.13 Guard's Tour Supervisory Service.

Guard's tour supervisory service provides fire protection and security surveillance when the building or portions of the building are unoccupied. Guard's tour supervisory services designed to continually report the actions of a guard may be found in connection with protected premises fire alarm systems using off-premises reporting to central or proprietary supervising stations. If a guard fails to complete a prescribed round, a runner is dispatched to the building. See NFPA 601, *Standard for Security Services in Fire Loss Prevention*, for additional information on guard patrol tours.

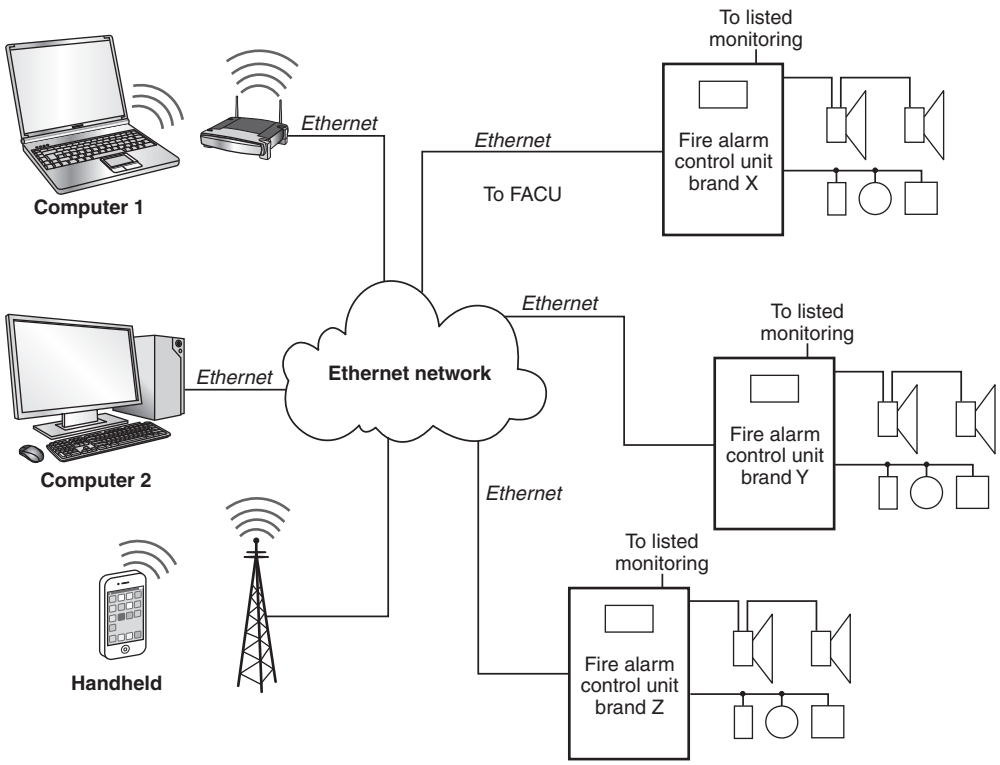

FIGURE A.23.12.4 *Supplemental Reporting Network.*

23.13.1 Guard's tour reporting stations shall be listed for the application.

23.13.2 The number of guard's tour reporting stations, their locations, and the route to be followed by the guard for operating the stations shall be approved for the particular installation in accordance with NFPA 601.

23.13.3 A permanent record indicating every time each signal-transmitting station is operated shall be made at a protected premises fire alarm control unit.

23.13.4 Where intermediate stations that do not transmit a signal are employed in conjunction with signal-transmitting stations, distinctive signals shall be transmitted at the beginning and end of each tour of a guard.

23.13.5 A signal-transmitting station shall be provided at intervals not exceeding 10 intermediate stations.

23.13.6 Intermediate stations that do not transmit a signal shall be capable of operation only in a fixed sequence.

23.14 Suppressed (Exception Reporting) Signal System.

This guard's tour arrangement is somewhat more flexible than supervised tours. Two advantages of this system are easier installation because each station does not have to be connected to the circuit, and reduced signal traffic because each station does not transmit a signal. The usual arrangement is to have

the guard transmit a signal at the start of the tour and another signal at the completion of the tour. The signals must be received within a specific time frame or the system initiates a supervisory signal indicating that the guard is delinquent in completing the round.

23.14.1 The suppressed signal system shall comply with the provisions of 23.13.2.

23.14.2 The system shall transmit a start signal to the signal-receiving location.

23.14.3 The start signal shall be initiated by the guard at the start of continuous tour rounds.

23.14.4 The system shall automatically transmit a delinquency signal within 15 minutes after the predetermined actuation time if the guard fails to actuate a tour station as scheduled.

23.14.5 A finish signal shall be transmitted within a predetermined interval after the guard's completion of each tour of the premises.

23.14.6 For periods of over 24 hours during which tours are continuously conducted, a start signal shall be transmitted at least every 24 hours.

23.14.7 The start, delinquency, and finish signals shall be recorded at the signal-receiving location.

23.15 Protected Premises Emergency Control Functions.

23.15.1 Emergency Elevator Operations. Emergency elevator operations shall meet the requirements of Sections 21.3, 21.4, 21.5, and 21.6.

23.15.2 HVAC Systems. HVAC systems shall meet the requirements of Section 21.7.

23.15.3 Door Release Service. Door release service shall meet the requirements of Section 21.9.

23.15.4 Electrically Locked Doors. Door-unlocking devices shall meet the requirements of Section 21.10.

23.15.5 Exit Marking Audible Notification Systems. Exit marking audible notification systems shall meet the requirements of Section 21.11.

N **23.15.6 Carbon Monoxide.** Where provided, carbon monoxide control functions shall comply with the requirements of 21.7.6. NFPA 720

It is common for a facility that is provided with CO detection to use ventilation fans as an emergency control function. If these are part of the building smoke control system, the smoke control response of the fire alarm system must take precedence over the response of the CO detectors during a fire alarm scenario.

23.16* Special Requirements for Low-Power Radio (Wireless) Systems.

Wireless systems incorporate two-way communications. Section 23.16 includes the terms *transceiver* and *system control unit* to reflect the two-way aspect of this communication and provide clarity of the equipment that may initiate, repeat, receive, and process the output signals.

A.23.16 The term *wireless* has been replaced with the term *low-power radio* to eliminate potential confusion with other transmission media such as optical fiber cables.

Low-power radio devices are required to comply with the applicable *low-power* requirements of Title 47, Code of Federal Regulations, Part 15.

Listed low-power wireless fire alarm systems must meet the same basic requirements as any other fire alarm system. However, the special requirements provided in Section 23.16 modify the basic requirements of the Code.

Listed low-power wireless fire alarm systems have numerous applications. Historic buildings where wire or cable installation will damage the building or affect the historic significance of the property have used wireless fire alarm systems successfully. Industrial buildings that use corrosive materials that can affect the integrity of the wiring used to interconnect a fire alarm system may benefit from low-power wireless systems. Likewise, any buildings that are remote from the main facility can also be well served by a low-power wireless fire alarm system. Exhibits 23.14 and 23.15 show examples of low-power wireless fire alarm systems. Exhibit 23.16 illustrates a combination system that also includes non-fire equipment.

23.16.1* Listing Requirements. Compliance with Section 23.16 shall require the use of low-power radio equipment specifically listed for the purpose.

A.23.16.1 Equipment listed solely for dwelling unit use would not comply with this requirement.

Δ **23.16.2* Power Supplies.** A primary battery(s) (dry cell) that meet the requirements of 23.16.2.1 or 23.16.2.2 shall be permitted to be used as the sole power source for devices incorporating a low-power radio transmitter/transceiver.

A.23.16.2 This requirement is intended to limit the impact from the failure of a battery operated receiver/transmitter in a given space. This requirement is not intended to prevent a single device that contains multiple function elements, such as a combination carbon monoxide and smoke detector, a detector with an independently controllable sounder, a notification appliance with visual and audible elements, and so forth. This requirement is intended to limit the number of functional elements to one of each independent type. For example, two manual fire alarm boxes could not rely on a single battery.

EXHIBIT 23.14

Low-Power Wireless System. (Source: CWSI, LLC, Sunrise, FL)

EXHIBIT 23.15

Low-Power Wireless Combination System Control Unit. (Source: CWSI, LLC, Sunrise, FL)

EXHIBIT 23.16

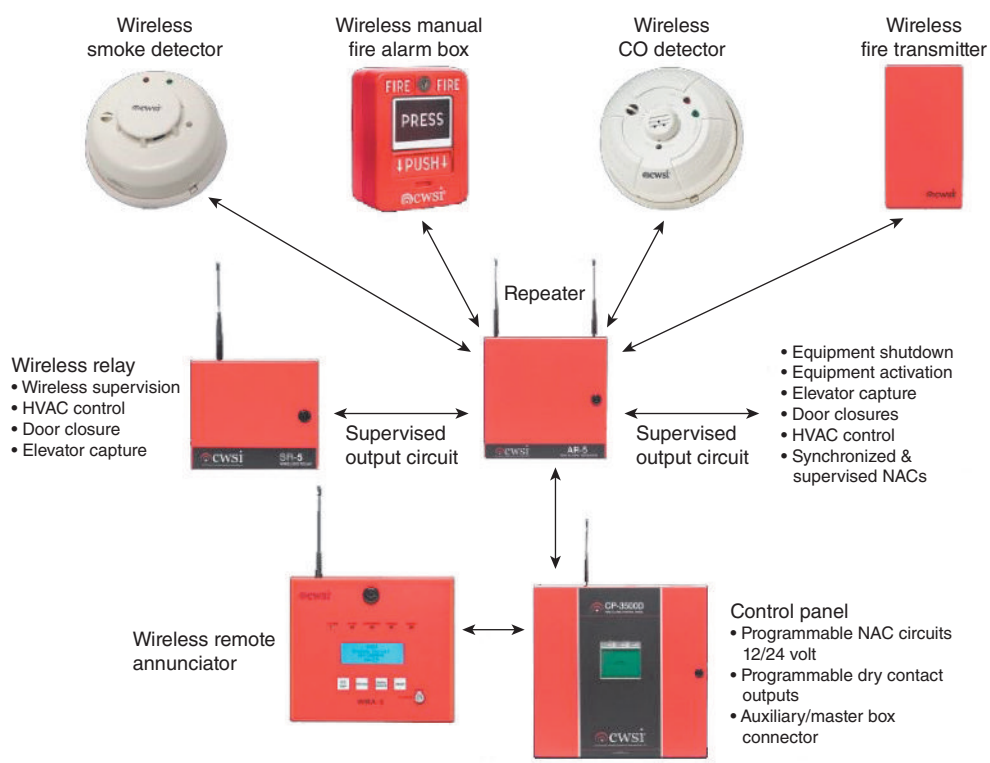

Combination System Including Low-Power Radio (Wireless) Fire Alarm System. (Source: CWSI, LLC, Sunrise, FL)

N **23.16.2.1** The following conditions shall be met when one or more primary batteries are utilized and a catastrophic (open or short) single battery failure affects the alarm operation of the device:

(1) Each transmitter/transceiver shall serve only one device and shall be individually identified at the system control unit.
(2) The battery(s) shall be capable of operating the low-power radio transmitter/transceiver and its associated device for not less than 1 year before the battery depletion threshold is reached.
(3) A low battery signal shall be transmitted before the device is no longer capable of providing 7 days of trouble signal operation followed by the signaling of a single non-trouble response.
(4) The low battery signal shall be distinctive from alarm, supervisory, tamper, and trouble signals, shall visibly identify the affected low-power radio transmitter/transceiver, and, when silenced, shall automatically re-sound at least once every 4 hours.
(5) Catastrophic (open or short) battery failure shall cause a trouble signal identifying the affected low-power radio transmitter/transceiver at the system control unit. When silenced, the trouble signal shall automatically re-sound at least once every 4 hours.
(6) Any mode of failure of a primary battery in a low-power radio transmitter/transceiver shall not affect any other low-power radio transmitter/transceiver.

N **23.16.2.2** The following conditions shall be met when multiple batteries are utilized and a catastrophic (open or short) single battery failure does not affect the alarm operation of the device:

(1) Two or more batteries shall be provided.
(2) The combined batteries shall be capable of operating the low-power radio transmitter/transceiver and its associated device for not less than 1 year before the battery depletion threshold in 23.16.2.2(3) is reached.
(3) A low battery signal shall be transmitted before the device is no longer capable of providing 7 days of trouble signal operation followed by the signaling of a single non-trouble response.
(4) Each individual battery, primary and secondary, shall be separately monitored for the battery depletion threshold, and a low battery signal shall be transmitted when an individual battery has reached the battery depletion threshold.
(5) Following the failure of a single battery, the remaining battery(s) shall be capable of operating the low-power radio transmitter/transceiver and its associated device for not less than 7 days when the battery depletion threshold in 23.16.2.2(3) is reached.
(6) The low battery signal shall be distinctive from alarm, supervisory, tamper, and trouble signals, shall visibly identify the affected low-power radio transmitter/transceiver, and, when silenced, shall automatically re-sound at least once every 4 hours.
(7) Catastrophic (open or short) failure of any individual battery shall cause a trouble signal identifying the affected low-power radio transmitter/transceiver at the system control unit. When silenced, the trouble signal shall automatically re-sound at least once every 4 hours.
(8) Each transmitter/transceiver shall be permitted to serve more than one device and shall be individually identified at the system control unit.

23.16.3 Alarm Signals.

23.16.3.1* When a wireless initiating device is actuated, its low-power radio transmitter/transceiver shall comply with 23.16.3.1.1 through 23.16.3.1.4.

This section defines the requirements for low-power radio (wireless) systems and their respective alarm initiating devices. Once an initiating device is activated, there is no need to continue to transmit an alarm signal once it has been received by the control unit, acknowledging that these signals are latched at the control unit. This helps to reduce the power consumption of the battery-operated devices during testing and increase battery life.

A.23.16.3.1 This requirement is not intended to preclude verification and local test intervals prior to alarm transmission.

N **23.16.3.1.1** It shall automatically transmit an alarm signal and be identified at the fire alarm system.

Once a wireless initiating device transmits an alarm signal to the control unit, it must be identified at the FACU. Once identified, a continuous alarm signal transmission is not required.

N **23.16.3.1.2** To ensure the receipt of an alarm signal by the control unit, the low-power radio transmitter/transceiver shall automatically repeat alarm transmissions at intervals not exceeding 60 seconds until the transmitter/transceiver receives a signal confirming receipt of the alarm signal by the control unit.

As indicated in 23.16.3.1.1, the wireless initiating device is not required to transmit an alarm signal continuously to the FACU. However, 23.16.3.1.2 requires the alarm signal to be transmitted at least once every 60 seconds.

23.16.3.1.3* Signals shall have priority in accordance with 23.8.4.7.

For combination systems, alarm signals to the FACU must be received and acted on in accordance with a pre-established priority. Signals associated with life safety systems have the highest priority and are followed by signals associated with property protection, then trouble signals, and lastly, other signals.

•

N **A.23.16.3.1.3** This requirement ensures that an alarm is received in the rare event that the RF channel experiences interference.

Using low-power-radio (wireless) systems may have advantages relating to the installation of these devices, but it is important to establish a level of priority for the signals to be received at the control unit. The priority and retransmission requirements of the signals are an attempt to overcome any radio frequency channel interferences that may occur.

23.16.3.1.4 Response time shall be in accordance with 10.11.1.

23.16.3.1.5* An alarm signal from a low-power radio transmitter/transceiver shall latch at the fire alarm control system until manually reset and shall identify the particular initiating device in alarm.

N **A.23.16.3.1.5** Trouble and supervisory signals are not required to latch. Self-restoring trouble and supervisory signals are acceptable.

N **23.16.3.1.6** Sixty seconds after the conclusion of resetting the fire alarm system, a non-restored actuated low-power radio transmitter/transceiver shall be identified at the fire alarm systems.

•

23.16.4 Monitoring for Integrity.

23.16.4.1 The low-power radio transmitter/transceiver shall be specifically listed as using a communication method that is highly resistant to misinterpretation of simultaneous transmissions and to interference (e.g., impulse noise and adjacent channel interference).

23.16.4.2 The occurrence of any single fault that disables communication between any low-power radio transmitter/transceiver and the receiver/transceiver system control unit shall cause a latching trouble signal within 200 seconds at the system control unit that individually identifies the affected device.

23.16.4.3 A single fault on the signaling channel shall not cause an alarm signal.

23.16.4.4 The periodic communication required to comply with 23.16.4.2 shall ensure successful alarm transmission capability.

23.16.4.5 Removal of a low-power radio transmitter/transceiver from its installed location shall cause immediate transmission of a distinctive trouble signal that indicates its removal and individually identifies the affected device.

23.16.4.6 Reception of any unwanted (interfering) transmission by a retransmission device or by the receiver system control unit for a continuous period of 20 seconds or more shall cause an audible and visible trouble indication at the system control unit.

23.16.4.7 The indication required by 23.16.4.6 shall identify the specific trouble condition as an interfering signal.

23.16.5 Output Signals from a Wireless Receiver/Transceiver of a Control Unit.

Where a wireless receiver/transceiver of a control unit is used to actuate remote devices, such as notification appliances and relays, by wireless means, the remote devices shall meet the following requirements:

(1) Power supplies shall comply with Chapter 10 or the requirements of 23.16.2.
(2) All monitoring for integrity requirements of Chapters 10, 12, 23, and 23.16.4 shall apply.
(3) Response time shall be in accordance with 10.11.1.
(4) Each wireless receiver/transceiver of a control unit shall automatically repeat actuated response signals associated with life safety events at intervals not exceeding 60 seconds or until confirmation that the output device has received the alarm signal.
(5) The remote devices shall continue to operate (latch-in) until manually reset at the system control unit.

References Cited in Commentary

Americans with Disabilities Act and Architectural Barriers Act Accessibility Guidelines, published in the *Federal Register,* U.S. Government Publishing Office, Washington, DC, July 23, 2004, and amended August 5, 2005.

ANSI/UL 864, *Standard for Control Units and Accessories for Fire Alarm Systems,* 10th edition, 2014, Underwriters Laboratories Inc., Northbrook, IL.

NFPA 13, *Standard for the Installation of Sprinkler Systems*, 2019 edition, National Fire Protection Association, Quincy, MA.

NFPA 17, *Standard for Dry Chemical Extinguishing Systems*, 2017 edition, National Fire Protection Association, Quincy, MA.

NFPA 17A, *Standard for Wet Chemical Extinguishing Systems*, 2017 edition, National Fire Protection Association, Quincy, MA.

NFPA 20, *Standard for the Installation of Stationary Pumps for Fire Protection*, 2019 edition, National Fire Protection Association, Quincy, MA.

NFPA 70®, *National Electrical Code®*, 2017 edition, National Fire Protection Association, Quincy, MA.

NFPA *101®*, *Life Safety Code®*, 2018 edition, National Fire Protection Association, Quincy, MA.

NFPA 601, *Standard for Security Services in Fire Loss Prevention*, 2015 edition, National Fire Protection Association, Quincy, MA.

NFPA 720, *Standard for the Installation of Carbon Monoxide (CO) Detection and Warning Equipment* (withdrawn), National Fire Protection Association, Quincy, MA.

TIA-526, *Standard Test Procedures for Fiber Optic Systems*, Telecommunications Industry Association, Arlington, VA.

Emergency Communications Systems (ECS)

CHAPTER

24

Chapter 24 covers the requirements for the installation and performance of emergency communications systems (ECS) for in-building fire emergency voice/alarm communications systems (EVACS) and other communications systems such as mass notification systems (MNSs) and paging systems used for emergency purposes. The arrangement of the sections with the requirements for the ECS presented in this chapter is shown in Figure A.24.3.7.

In the 2016 edition of the Code, Chapter 24 was reorganized and updated based on input from users in the field and the experiences gained from ECS installations. The 2019 edition of the Code follows the same organization as the 2016 edition. New material for messaging used in MNSs was added to the 2019 edition.

The requirements for MNSs have been correlated and updated with the requirements established by the U.S. Department of Defense in the most recent issue of the publication *Design and O&M: Mass Notification Systems* (UFC 4-021-01).

The following list is a summary of significant changes to Chapter 24 for the 2019 edition of the Code:

- Added requirements for message development in 24.3.6.2.2, 24.3.6.2.3, and 24.3.6.2.4.
- Added 24.3.11, Building System Information Unit.
- Combined requirements in Section 24.10 to include area of refuge (area of rescue assistance) emergency communications systems, stairway communications systems, elevator landing communications systems, and occupant evacuation elevator lobby communications systems.
- In most instances, the term *visible appliance* was changed to *visual appliance*. The appliance itself is a visual appliance. The appliance and/or its lighting effect might or might not be visible to an observer.
- In most instances, the term *speaker* has been changed to *loudspeaker*. This is to avoid confusion when the word "speaker" identifies a person who is speaking a message.
- Throughout the chapter, "hearing-impaired" was changed to "deaf or hard of hearing."

24.1 Application.

24.1.1 The application, installation, and performance of emergency communications systems and their components shall comply with the requirements of this chapter.

24.1.2* The requirements of this chapter shall apply to emergency communications systems within buildings and outdoor areas.

A.24.1.2 An emergency communications system could target the general building, area, space, campus, or region.

24.1.3 The requirements of Chapters 7, 10, 12, 17, 18, 21, 23, 26, and 27 shall also apply unless otherwise noted in this chapter.

Documentation requirements of all inspection, testing, and maintenance activities are outlined in Chapter 7 of this Code.

24.1.4 Inspection, testing, and maintenance shall be performed in accordance with testing frequencies and methods in Chapter 14.

24.1.5 The requirements of this chapter shall not apply to Chapter 29 unless specifically indicated.

24.2 Purpose.

24.2.1 The systems covered under Chapter 24 shall be for the protection of life by indicating the existence of an emergency situation and communicating information necessary to facilitate an appropriate response and action.

FAQ Do the requirements of Chapter 24 for ECS apply only to in-building applications?

As indicated by the types of systems described in Figure A.24.3.7, this chapter provides requirements for more than just in-building fire EVACS. An event such as a terrorist attack, an on-campus shooter, or a natural disaster would necessitate clear and on-time communication from those in authority to the occupants of the building or outside areas, or via a distributed recipient mass notification system (DRMNS) directly to the people, wherever they may be during the emergency.

24.2.2 This chapter establishes minimum required levels of performance, reliability, and quality of installation for emergency communications systems but does not establish the only methods by which these requirements are to be achieved.

FAQ Do the codes require an MNS?

The codes do not require an owner to install an MNS. Unlike traditional fire alarm devices, appliances, and other equipment that have historically been required by NFPA *101®, Life Safety Code®*, and other building codes, MNSs are not typically required by these documents, although in-building EVACS are required in certain buildings and occupancies. Essentially, any MNS for commercial enterprises will be owner-driven. However, once the decision has been made to install a mass notification system, all the applicable requirements in this Code must be followed for the MNS design, documentation, installation, testing, and maintenance.

There are often requirements for U.S. Department of Defense installations as outlined in UFC 4-021-01.

24.2.3 An emergency communications system is intended to communicate information about emergencies including, but not limited to, fire, human-caused events (accidental and intentional), other dangerous situations, accidents, and natural disasters.

For the ECS to communicate information properly, it must reproduce messages so that the intended listeners will both hear and understand them. The information provided must be relevant and give enough time for the occupants to take the correct action. An ECS should be more than just a technological solution — it should include a structured and rigorously tested procedural/management component to be effective. This management component includes the establishment of an emergency response plan and the training of all occupants in the building or on-site to respond as required by the emergency response plan. Simply providing information does not guarantee immediate and appropriate response from the target population.

FAQ What information should an effective emergency message contain?

Research shows that the message is one of the most important factors in determining the effectiveness of a warning system and that the message must provide the following content:

- Information on the hazard and danger
- Guidance on what action people should take
- Description of the risk or hazard location
- Direction on when people need to act
- Name of the warning source (who is giving the message)

Warning style is also crucial — it must be specific, consistent, certain, clear, and accurate. See also the requirements in 24.3.6 and Annex G.

24.3 General.

24.3.1 Intelligible Voice Messages.

24.3.1.1* Emergency communications systems shall be capable of the reproduction of prerecorded, synthesized, or live (e.g., microphone, telephone handset, and radio) messages with voice intelligibility in accordance with Chapter 18.

System Design Tip

A majority of sound and communications systems are designed by sound system professionals: see A.24.3.1.1. The important issue in meeting this requirement for intelligible voice messages is to have a basic understanding of sound and communications principles. Designers and installers should understand the importance of a good distribution of loudspeakers rather than a higher power output of a few loudspeakers. Loudspeaker distribution is the first step. Loudspeaker response characteristics and properly sizing amplifiers are also very important. Additionally, messaging requirements in 24.3.6 need to be reviewed to meet the basic intelligibility requirements as well as length and message content.

A.24.3.1.1 In certain situations, it is important to provide a distributed sound level with minimal sound intensity variations to achieve an intelligible voice message. This differs from past fire alarm design practice that used fewer notification appliances but with each having greater sound pressure output levels. Nonemergency system design practice is to use more loudspeakers and less sound intensity from each loudspeaker. Besides improving intelligibility of the message, this approach minimizes annoyance to building occupants from the system and lessens the likelihood of tampering with the system by occupants because of loudspeakers being too loud. In other applications, such as outdoor signaling where reverberation is not a problem, intelligibility can be achieved by using fewer appliances or clusters of appliances covering larger areas.

Intelligibility is a complex function of the source audio, the acoustic response of the architectural features and materials of the immediate vicinity, and the dynamics created by the room's occupants. Refer to Annex D for more information on speech intelligibility and how it is predicted. Spacing loudspeakers closely can be an intelligibility-enhancing technique but can occasionally lead to opposite results when improperly designed. There are several techniques using directionality features that do not use closely spaced loudspeakers but rather use the room/space acoustic response in their favor.

24.3.1.2* Where listed loudspeakers do not achieve the intelligibility requirements of the Code for a notification zone, non-listed loudspeakers shall be permitted to be installed to achieve the intelligibility for that notification zone.

System Design Tip

Many occupiable spaces, such as atriums and hard surface areas, have acoustics that make it difficult to achieve the desired intelligibility. A listed loudspeaker for fire alarm use may not accomplish the intelligibility goal. The language of 24.3.1.2 permits the use of loudspeakers to provide intelligible life safety messaging. Non-listed loudspeakers must not be used throughout the building but only in the acoustically challenging spaces. The need to use these loudspeakers must be demonstrated by the system designer and approved by the authority having jurisdiction. See Exhibit 24.1 for a non-listed loudspeaker used to accommodate reverberant environments such as large industrial buildings.

A.24.3.1.2 In certain acoustically challenging areas, listed fire alarm loudspeakers might not be capable of producing an intelligible message. Non–fire alarm listed loudspeakers are permitted to be installed in these limited areas. A failure of a non-listed loudspeaker should not disrupt the operation of listed fire alarm loudspeakers and operation of the fire alarm or mass notification control equipment. Typically, a dedicated loudspeaker circuit and other audio components such as amplifiers could be necessary to meet this functionality.

The audio equipment necessary to power non-listed loudspeakers will also be non-listed for fire alarm use. That said, the performance of the amplifier and other equipment should meet the intent and performance requirements of the Code to ensure that all the connections and equipment are monitored for integrity and will operate on backup power as required for the fire alarm system. See Exhibit 24.2 for a non-listed loudspeaker used for acoustically challenging environments such as atriums and parking garages.

24.3.2* **Microphone Use.** All users of systems that have microphones for live voice announcements shall be provided with posted instructions for using the microphone.

Δ **A.24.3.2** Users who speak too softly, too loudly, or who hold a microphone too close, too far, or at an incorrect angle can introduce distortion or cause reduced intelligibility of the spoken message. The characteristics of the system microphone are important ergonomic factors that affect voice intelligibility. Some microphones need to be held close to the mouth, perhaps an inch or less. Others need to be three or four inches away. How is the user to know what's ideal? A simple diagram next to the microphone can help. Some microphones are very directional and must be held flat in front of the mouth. These microphones are useful in small command centers, since they are less likely to pick up conversations off to the sides. On the other hand, microphones with a wider polar sensitivity are more forgiving for a user to hold

EXHIBIT 24.1

Non-listed Loudspeaker Used for Reverberant Environments. (Source: Ultra Electronics-USSI HyperSpike®, Columbia City, IN)

EXHIBIT 24.2

Non-listed Loudspeaker Used for Acoustically Challenging Environments. (Source: Ultra Electronics-USSI HyperSpike®, Columbia City, IN)

comfortably while moving and doing other tasks. Their downside is that they will pick up extraneous noise in poorly designed command centers introduced into the microphone.

Improper microphone use will negatively affect the intelligibility of the message that the microphone user sends. In addition to providing the proper microphone for the job, the owner should train the system users in correct microphone use. This requirement should apply to all shifts of workers whose responsibility will be to transmit messages through the ECS.

24.3.3* Required Emergency Communications Systems. An emergency communications system shall be installed in occupancies where required by the authority having jurisdiction or by other applicable governing laws, codes, or standards.

A.24.3.3 The requirements found in *NFPA 70* Article 708, should be considered for emergency communications systems that are installed in vital infrastructure facilities classified as a designated critical operations area (DCOA). This includes facilities that, if destroyed or incapacitated, would disrupt national security, the economy, public health or safety and where enhanced electrical infrastructure for continuity of operation has been deemed necessary by governmental authority.

If the facility where the ECS is required is classified as a designated critical operations area (DCOA), then additional electrical requirements apply. Article 708 of *NFPA 70®*, *National Electrical Code®* (*NEC®*), covers critical operations power systems (COPS).

24.3.4* Nonrequired (Voluntary) Emergency Communications Systems.

FAQ When is an ECS installation considered nonrequired (voluntary)?

An installation of an ECS is voluntary when the owner decides that a system is needed to meet the fire safety or emergency response plan for the occupancy. Although there may be no building code or NFPA *101* requirement for the system, the designer and the installer of an ECS must understand the owner's goals and objectives and the system's intended use. Once the decision is made to install an ECS, then the requirements of the Code must be followed.

System Design Tip

A.24.3.4 The features for a nonrequired system should be established by the system designer on the basis of the goals and objectives intended by the system owner.

24.3.4.1 Nonrequired emergency communications systems and components shall meet the requirements of this chapter.

Whether or not an ECS is required by a code, it is imperative that the design and installation of the ECS be made in accordance with the requirements herein. Although the ECS may be installed voluntarily, the system must be a code-compliant system just as for a required ECS.

24.3.4.2 Nonrequired emergency communications systems and components shall be identified on the record drawings.

System Design Tip

Even though the ECS system may not be required, if a system is designed and installed in a building, the record drawings (as-built drawings) must show the installation as if it were a required system. Remember that the occupants rely on these systems and will have no knowledge whether the system is required by the Code or not.

24.3.5 Ancillary Functions.

24.3.5.1 Ancillary functions shall not impair the required operation of the emergency communications system.

An ECS is permitted to be used regularly for nonemergency purposes, such as paging or background music, so that an owner is not required to install multiple systems. However, nonemergency uses such as paging or public address (PA) must not interfere with the performance of any emergency function of the ECS.

24.3.5.2* Loudspeakers used for emergency communications system functions also providing ancillary functions shall meet the conditions of either 24.3.5.2(1) or (2):

Note the use of "either/or" in the requirement. An ECS may also be used for nonemergency uses such as background music or PA. However, this nonemergency use must not compromise the loudspeakers and circuits. One "or" the other of the methods must be chosen to comply with the Code. Although the Code still requires monitoring the system's integrity as outlined in Chapters 10 and 12, the authority having jurisdiction may accept a performance-based alternative for the monitoring requirements, such as constant daily use of the system.

(1) The fire command center or the emergency command center as applicable shall be constantly attended by trained personnel, and selective paging is permitted by the authority having jurisdiction.
(2) All of the following conditions shall be met:
    (a) The loudspeakers and associated audio equipment are installed or located with safeguards to resist tampering or misadjustment of those components essential for intended emergency notification.
    (b) The monitoring integrity requirements of 10.6.9 and Sections 10.19 and 12.6 continue to be met while the system is used for non-emergency purposes.

System Design Tip

Loudspeaker systems are available that have volume controls and components that allow occupants to lower the volume of or turn off the loudspeakers in an area or office. These systems are also designed to

require the loudspeakers to operate at their required power output when the fire alarm system is actuated. This safeguard, which can also be controlled by software, meets the requirement 24.3.5.2(2)(a). The requirement for monitoring the integrity of the appliance is provided for the wiring to the appliance and not the appliance itself because the appliance will or could be turned off. See Exhibit 24.7 for an example of a loudspeaker volume control component.

A.24.3.5.2 Dedicated in-building fire emergency voice/alarm communications systems are not required to monitor the integrity of the notification appliance circuits while active for emergency purposes. However, these circuits have to be monitored for integrity while active for non-emergency purposes. The building operator, system designer, and authority having jurisdiction should be aware that, in some situations, such a system could be subject to deliberate tampering. Tampering is usually attempted to reduce the output of a sound system that is in constant use, such as background music or a paging system, and that could be a source of annoyance to employees.

The likelihood of tampering can be reduced through proper consideration of loudspeaker accessibility and system operation.

Access can be reduced through the use of hidden or nonadjustable transformer taps (which can reduce playback levels), use of vandal-resistant listed loudspeakers, and placement in areas that are difficult to access, such as high ceilings (any ceiling higher than could be reached by standing on a desk or chair). Non-emergency operation of the system should always consider that an audio system that annoys an employee potentially reduces employee productivity and can also annoy the public in a commercial environment. Most motivations for tampering can be eliminated through appropriate use of the system and employee discipline. Access to amplification equipment and controls should be limited to those authorized to make adjustments to such equipment. It is common practice to install such equipment in a manner that allows adjustment of non-emergency audio signal levels while defaulting to a fixed, preset level of playback when operating in emergency mode. Under extreme circumstances, certain zones of a protected area might require a dedicated in-building fire emergency voice/alarm communications zone.

24.3.5.3 Ancillary functions shall be inspected and tested annually to verify they will not impair the operation of the fire alarm system or the mass notification system.

Ancillary functions are required to be tested to ensure that they do not impair the ECS. See 24.1.4. Also see NFPA 4, *Standard for Integrated Fire Protection and Life Safety System Testing*, for all integrated systems testing requirements.

24.3.5.4 Where emergency communications systems utilize Class N pathways that are also shared Level 1 or Level 2 pathways as a means to support ancillary functions, devices, or interconnected systems, the shared pathways shall meet the requirements of 23.6.3.

The 2016 edition of the Code was revised to permit the controlled use of Ethernet and other computer networks in a building to interconnect the components of a fire alarm system and ECS.

Traditionally, the distributed components of a fire alarm system connect using a two-conductor cable(s), which interconnects all fire alarm initiating devices and fire alarm notification appliances to a fire alarm control unit (FACU). However, with the proliferation and availability of computer networks, many communication devices connect through Ethernet or other computer networks.

Fire alarm systems have long used computer technology to connect various devices and appliances to the FACU. But fire alarm systems have always used a private, customized wiring network particular to the specific FACU to provide for a high level of integrity and to safeguard the operation of the system from other communications on that network that could interfere. As A.12.3.6(1) explains in

language that is more technical: "A device with an Ethernet address is, in most cases, a physical endpoint connected to a dedicated cable" and distributed throughout a building using switches and routers. "Traditional SLC devices are all wired on the same communication line (in parallel), similar to an old party-line telephone system. By comparison, Ethernet's network switches direct each data packet to its intended recipient device like our modern phone systems."

Building owners have questioned why they cannot use their own computer networks to connect all of the fire alarm system devices and appliances to an FACU. They argue that allowing the use of the existing computer network in a building would greatly reduce wiring costs and provide greater flexibility for changes and additions. However, sharing a network presents its own set of challenges. How would the fire alarm system maintain priority if other signal traffic overloaded the capability of the network? How would the fire alarm system monitor the integrity of the network, as it had done with its private network?

An informal study looked at fire alarm system status monitoring via the Ethernet and revealed that Ethernet monitoring experiences downtime or unavailability from 0.75 percent to 1.50 percent of the time. Most of the events that contribute to this downtime arise when information technology personnel take other systems down for upgrades, reconfigurations, rerouting of cables, testing, and maintenance. It was determined that using such a network as a single means of fire alarm system device and appliance interconnection may present reliability issues.

In response to these concerns, a new circuit designation called "Class N" has been developed. This circuit includes two or more pathways that must have their operational capability verified through end-to-end communication. The redundant path intends to compensate for Ethernet wiring that cannot meet all of the fault monitoring requirements that normally apply to traditional wiring methods used for fire alarm circuits.

With the advance of the Internet of Things (IoT) concept and Power over Ethernet (PoE), the role of a standard fire alarm system could take on a whole new meaning. The important take away with any new technology is whether its performance will equal or improve reliability over existing technology. Now the closest a fire alarm system will get to being affected by the IoT will be through monitoring of its status and integrated through IoT sensors to be part of a building management system.

24.3.5.4.1 In addition to the requirements of 23.6.3, a risk analysis shall be performed and approved by the AHJ.

System Design Tip

In this case, the risk analysis would be to determine the reliability of the Class N pathway proposed to be used in the design of the system.

24.3.6 Messages for One-Way Emergency Communications Systems.

24.3.6.1* Messages shall be developed for each scenario developed in the emergency response plan.

A.24.3.6.1 See Annex G.

24.3.6.2*

A.24.3.6.2 See Annex G.

N **24.3.6.2.1** Based on the emergency response plan, emergency messages shall have content that provides information and instructions to people in the building, area, site, or installation.

It is important to understand that not only should the message contain the nature of the emergency but also the instructions to the occupants about what they should do and where they should go for their safety. Also see the commentary and FAQ following 24.2.3.

N **24.3.6.2.2** The proposed verbiage of prerecorded automatic emergency messages shall be identified on the permit plans and be approved by the authority having jurisdiction prior to their programming into the emergency voice communications system.

Messages are not developed in a vacuum. The authority having jurisdiction will know best regarding what safety measures they bring to the table and other stakeholders will best understand how to react to the emergency knowing what safety measures can be expected. Therefore, at the very least, the authority having jurisdiction should both know and approve the messages planned for dissemination for each expected event (risk).

N **24.3.6.2.3** As a minimum, the proposed verbiage of prerecorded messages shall be in the official spoken language acceptable to the authority having jurisdiction.

Many times, the language spoken in the messages will be first in English and second in a predominate language other than English that is spoken in the facility. However, that scenario could be reversed. If most of the occupants speak a language other than English, then the first message should be in that language with the second message transmitted in English. Because the authority having jurisdiction is likely to know this information, designers need to obtain their approval and agreement regarding predominate languages in the facility.

System Design Tip

N **24.3.6.2.4** Additional prerecorded message(s) shall be permitted as approved by the authority having jurisdiction.

Keeping the number of messages to a minimum is critical to avoid overwhelming the occupants with too much information. Therefore, additional messages should contain only information crucial to occupant safety. Also see Annex G.

24.3.6.3* A message template shall be developed for each message required in 24.3.6.1.

Message templates are discussed in Annex G and are used to ensure that concise and clear messaging is developed.

A.24.3.6.3 See Annex G.

Annex G contains details of research performed to better understand the requirements of clear, concise messaging, with specific guidance on the development of messages.

24.3.6.4 For an evacuation message, a tone in accordance with 18.4.2 shall be used with a minimum of two cycles preceding and following the voice message.

24.3.6.5 Test messages shall clearly state the phrase "This is a test."

24.3.7* System Classification. Emergency communications systems (ECS) shall be designated as one-way or two-way.

A.24.3.7 One-way emergency communications systems are intended to broadcast information, in an emergency, to personnel in one or more specified indoor or outdoor areas. It is intended that emergency messages be conveyed either by audible or visual textual means or both. This section does not apply to bells, horns, or other sounders and visual notification appliances, except where used in conjunction with the desired operation of emergency messages and signaling.

Two-way emergency communications systems are divided into two categories, those systems that are anticipated to be used by building occupants and those systems that are to be used by fire fighters, police, and other emergency services personnel. Two-way emergency communications systems are used both to exchange information and to communicate information, such as, but not limited to, instructions, acknowledgement of receipt of messages, condition of local environment, and condition of persons, and to give assurance that help is on its way.

NFPA 72 contains requirements that can impact the application of emergency communications systems. For instance, coordination of the functions of an emergency communications system with other systems that communicate audibly and/or visibly [such as fire alarm systems, security systems, public address (PA) systems] is essential in order to provide effective communication in an emergency situation. Conflicting or competing signals or messages from different systems could be very confusing to occupants and have a negative impact on the intended occupant response. Where independent systems using audible and/or visual notification are present, the emergency communications system needs to interface with those systems to effect related control actions such as deactivating both audible and visual notification appliances. The use of a single integrated combination system might offer both economic and technical advantages. In any case, coordination between system functions is essential. The coordination of emergency communications systems with other systems should be considered part of the risk analysis for the emergency communications system. *(See Figure A.24.3.7.)*

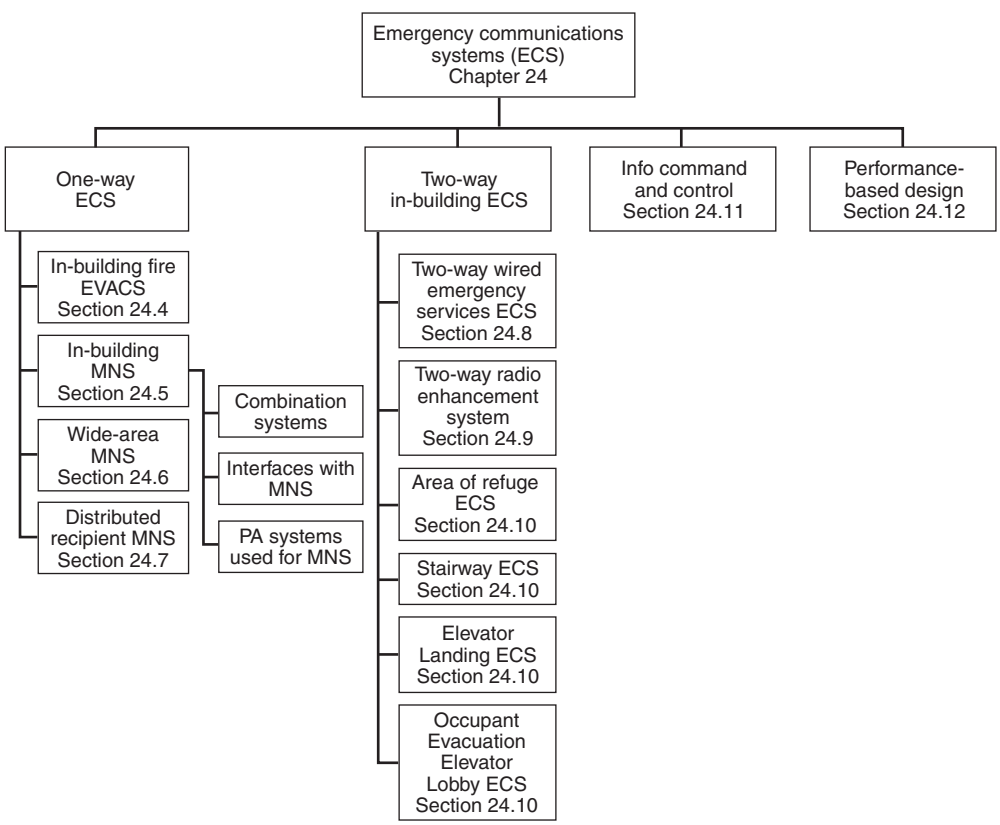

Δ ***FIGURE A.24.3.7*** *Emergency Communications Systems.*

Additional documents such as ANSI/NEMA Standard SB-40, *Communications Systems for Life Safety in Schools*, can also be used as supplemental resources to provide help with risk assessment and application considerations.

Combining or integrating in-building fire EVACS with other communications systems such as mass notification, PA, and paging systems is permitted. The fire alarm or priority mass notification messages (as determined by the risk analysis) must take precedence over any other announcement, such as paging from a telephone system or other PA system. In addition to reduced design, installation, and ongoing life cycle costs, regular use of the system for normal paging functions provides an end-to-end test of the audible notification components and circuits. Occupants familiar with use of the system for normal paging are also more likely to be comfortable and proficient in use of the system during an emergency.

24.3.7.1* One-way emergency communications systems shall consist of one or more of the following:

(1) In-building fire emergency voice/alarm communications systems (EVACS) *(see Section 24.4)*
(2) In-building mass notification systems *(see Section 24.5)*
(3) Wide-area mass notification systems *(see Section 24.6)*
(4) Distributed recipient mass notification systems (DRMNS) *(see Section 24.7)*

N **A.24.3.7.1** Other codes reference *NFPA 72* with respect to the emergency voice alarm communications (EVAC) systems or design and installation requirements. If EVAC systems are required, they are also required to be listed per UL 864, *Standard for Control Units and Accessories for Fire Alarm Systems*. However, owners or designers might identify risks in addition to fire that might also require additional emergency communications systems such as in-building mass notification system (MNS), wide-area MNS, or distributed recipient MNS. If an MNS is included in the design, a risk analysis is required by 24.3.12. In consideration of the risk analysis, related design could include combinations of the emergency communications systems options presented in 24.3.7.1. For example, depending on the specifics of the facility under consideration, the design could include combination systems or other combinations of separate EVAC UL 864 and equipment listed per UL 2572, *Mass Notification Systems*, as long as these systems are interfaced in compliance with Chapter 24 and are approved by the AHJ.

Before the advent of MNS and ANSI/UL 2572, *Mass Notification Systems*, all fire alarm system control equipment, including EVACS control equipment, had to be listed to an applicable standard such as ANSI/UL 864, *Standard for Control Units and Accessories for Fire Alarm Systems*. It was often argued that a stand-alone MNS should be listed to its own standard, and the technical committee supported the development and adoption of such a standard. An EVACS could and, for many reasons, should be permitted to serve double duty so that it could provide both fire alarm and MNS messaging and control; see 24.3.10. A control unit listed to ANSI/UL 864 can do both fire alarm and mass notification. However, an MNS control unit listed to ANSI/UL 2572 can support only an MNS and cannot by itself support any control or messaging for a fire alarm system. As an example, if a paging system were robust enough to meet the performance requirements of ANSI/UL 2572, then it is possible that an authority having jurisdiction would approve that use. However, that same system could in no way serve as a fire alarm system. To allow these systems to exist together in the same building and possibly take advantage of one or the other system's equipment to avoid duplication (using the same loudspeakers for both, for example) then the two separate systems could be interfaced with a listed interface. In addition, the interface will need to meet the requirements of the authority having jurisdiction.

24.3.7.2 Two-way emergency communications systems shall consist of one or more of the following:

(1) Two-way, in-building wired emergency services communications systems (see Section 24.8)
(2) Two-way radio communications enhancement systems (see Section 24.9)
(3) Area of refuge (area of rescue assistance) emergency communications systems (see Section 24.10)
(4) Stairway communications systems (see Section 24.10)
(5) Elevator landing communications systems (see Section 24.10)

When the building elevators are part of an accessible means of egress, a two-way communications system that is labeled an "elevator landing communications system" must be provided in accordance with the building codes in effect in the jurisdiction. These systems must provide communications at the landing, serving each elevator or bank of elevators on each accessible floor that is one or more stories above or below the level of exit discharge that serve as an accessible means of egress. These systems are not required for freight or service elevator landings and are not required where there is an area of refuge communications system already serving the landing.

(6) Occupant evacuation elevator lobby communications systems *(see Section 24.10)*

With the advent of occupant evacuation elevators (OEEs), the building code could have a requirement for the elevator lobby to have two-way communications with the building's fire command center or at an alternative location specified by the fire department to allow for occupant communication between the elevator lobby and the fire command center.

24.3.8* Mass Notification Layers. Emergency communications used for mass notification shall be categorized into layers and take into consideration type of audience and reach as follows:

(1) Layer 1 relates to means of notification of occupants by systems/equipment installed inside a building and controlled only by authorized users (in-building ECS)
(2) Layer 2 relates to means of notification of occupants on the exterior of a building and controlled only by authorized users (wide-area MNS)
(3) Layer 3 relates to means of notification of personnel through individual measures (distributed recipient MNS)
(4) Layer 4 relates to means of notification of personnel by public measures (broadcast radio, television, and so forth)

System Design Tip

The term *layer* classifies the type of MNS and allows the designer and authority having jurisdiction a way to compare the MNS types available. The layer designation does not attribute a required level of MNS to be installed but is only descriptive.

A.24.3.8 The layers can be used in combination. In all cases, the system design needs to follow the risk analysis and be integrated into the emergency response plan. Research has shown that more than one layer has been used to be effective. Multiple layers provide an extra level of notification (a safety net). The overall MNS application is likely to exploit a number of public and individual systems or components that combine to produce a reliable and robust solution to achieve emergency notification objectives.

Layer 1 could consist of elements such as the following:

(1) Emergency voice/alarm communications systems (EVACS)
(2) In-building mass notification system (MNS)

These systems are very similar to an EVACS with the exception that all risks (with the exception of fire) are reviewed and messages developed to notify the occupants of the presence or impending risk that is about to happen. Like the EVACS, it is not controlled in any way by the occupants but by authorized personnel only. Typically, a Layer 1 system will be combined with another system represented by another layer to create a more robust MNS.

(3) One-way voice communication systems (PA)
(4) Two-way voice communication systems
(5) Visual notification appliances
(6) Textual/digital signage/displays

Layer 2 could consist of elements such as the following:

(1) Wide-area outdoor MNS
(2) High power loudspeaker arrays (HPLAs)

Layer 3 could consist of elements such as the following:

(1) Short message service (SMS)
(2) Email
(3) Computer pop-ups
(4) Smartphone applications (apps)
(5) Reverse 911/automated dialing

Layer 4 could consist of elements such as the following:

(1) Radio broadcast (satellite, AM/FM)
(2) Television broadcast (satellite, digital)
(3) Location specific messages/notifications
(4) Weather radios
(5) Social networks

Also see *Optimizing Fire Alarm Notification for High Risk Groups* research project.

The designer of an MNS should meet with the stakeholders for the system and review the risk analysis to determine the appropriate layer or layers of MNS needed to meet the stakeholders' needs. A Level 1 layer will typically be combined with another layer.

System Design Tip

24.3.9* Design Documentation. Design documents in accordance with Section 7.3 shall be prepared prior to installation of any new system.

The minimum documentation requirements for all systems are in Section 7.1 and Section 7.2. The requirements outlined in Section 7.3 must be specifically referenced for the requirements to apply to in-building MNSs. The more restrictive of the requirements should be applied in any situation in which there may appear to be a conflict. This ensures that the MNS is well documented and matches the emergency response plan's operational requirements. The required documentation helps to ensure long-term reliability by recording the information necessary for proper maintenance of the MNS.

A.24.3.9 The design documents might include, but are not limited to, shop drawings, input/output matrix, battery calculations, notification appliance voltage drop and wattage calculations for visual notification appliances and loudspeakers, and product data sheets.

The 2016 edition of the Code revised Chapter 7 for all documentation requirements. Previous MNS documentation requirements are now in Chapter 7. Section 7.3 relates to MNS design documentation.

24.3.9.1 Systems that are altered shall have design documents prepared that apply to the portions of the system that are altered.

System alterations can take place at any time. The portions of a system that are altered must have the appropriate documentation.

24.3.9.2 Documents shall be revised as necessary following installation to represent as-built conditions and include record drawings.

Δ **24.3.10* Control Unit Listing for Mass Notification Systems.** Control units installed as part of a mass notification system shall be in compliance with this Code and at least one of the following applicable standards:

(1) ANSI/UL 864, *Standard for Control Units and Accessories for Fire Alarm Systems*
(2) ANSI/UL 2572, *Mass Notification Systems*.

MNS stand-alone systems must meet the applicable standard(s), and generally for the MNS control equipment the governing standard is ANSI/UL 2572.

A.24.3.10 Fire emergency voice/alarm communications systems (EVACS) that are listed in accordance with ANSI/UL 864, *Standard for Control Units and Accessories for Fire Alarm Systems,* can be used for MNS. A control unit only listed in accordance with ANSI/UL 2572, *Mass Notification Systems,* cannot be used as a fire alarm control unit.

The development of a separate UL standard for mass notification systems would permit equipment that is acceptable for communications during a non-fire emergency while still being assured that the MNS equipment met certain minimum requirements as outlined in the Code. An EVACS for MNS use is permitted as long as the control unit has been evaluated to ANSI/UL 2572 because it has more stringent requirements for a fire alarm system with communications. That said, compliance with ANSI/UL 2572 in no way lessens the importance of the MNS equipment.

N **24.3.11 Building System Information Unit.** A building system information unit that displays information and events from the mass notification system shall comply with 23.8.4.4.1 through 23.8.4.4.3.

System Design Tip

Subsection 24.3.11, Building System Information Unit (BSIU) is new to the 2019 edition of the Code. This is another example that users of the Code must be aware of in the integration of requirements throughout the Code. Designers need to be aware of the requirements. The BSIU is permitted to be attached to a fire alarm circuit under certain conditions outlined in 23.8.4.4.1 through 23.8.4.4.3. The user of this handbook is cautioned to read the Code requirements to ensure compliance when using a BSIU. Essentially the BSIU circuits and the BSIU equipment must not interfere with the operation of the fire alarm system.

24.3.12* Risk Analysis for Mass Notification Systems.

FAQ What are some basic issues that must be addressed by the MNS risk analysis?

Emergency planning requires a detailed risk analysis (vulnerability and failure analysis), which includes an evaluation of the risk to the asset (building, operations, etc.), the probability of occurrence and frequency of loss, and the loss effect. Risk mitigation includes dissemination of information, which is the role an MNS plays in an emergency. Subsection 24.3.12 provides guidance on developing a risk analysis.

Exhibit 24.3 illustrates the extent of mass notification by showing that it begins with the individual and moves through different stages until, ultimately, the goal of notifying the entire nation of an event is met.

A.24.3.12 There are many credible risk assessment methodologies that can be utilized and/or referenced in conducting the risk assessment required in 24.3.12, some of which are listed as follows:

(1) *CARVER — Target Analysis and Vulnerability Assessment Methodology*, Washington, DC: U.S. Department of Defense (see Field Manual 34-36, Special Operation Forces Intelligence and Electronics Warfare Operation, Sept. 30, 1991), www.defense.gov
(2) *General Security Risk Assessment Guidelines*. Alexandria, VA: American Society for Industrial Security International, www.asisonline.org
(3) *NFPA 1600* Quincy, MA: National Fire Protection Association, www.nfpa.org
(4) NFPA 730 Quincy, MA: National Fire Protection Association, www.nfpa.org
(5) *Responsible Care Code*, Washington, DC: American Chemistry Council, www.americanchemistry.com
(6) *Risk and Resilience Management of Water & Wastewater Systems*, Denver, CO: American Water Works Association, www.awwa.org
(7) *VAMCAP® Vulnerability Assessment Methodology for Critical Asset Protection*, Wilmington, DE: SafePlace Corporation, www.safeplace.com
(8) *Vulnerability Assessment Methodologies*, Albuquerque, NM: Sandia National Laboratories, www.sandia.gov

Refer to A.7.8.2(1) and Figure A.7.3.6 for a risk analysis checklist.

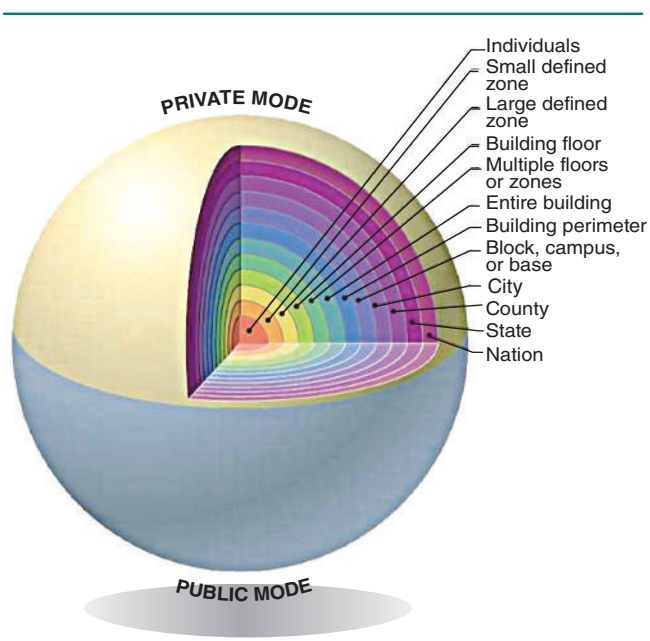

EXHIBIT 24.3

Extent of Mass Notification System (MNS).

24.3.12.1* Each application of a mass notification system shall be specific to the nature and anticipated risks of each facility for which it is designed.

A.24.3.12.1 Although this chapter outlines some specific criteria and/or limitations, each application should be based on recognized performance-based design practices and the emergency response plan developed for the specific facility.

Here are the general categories of questions that might be presented to the senior manager responsible for mass notification decisions. The actual questions for each project must be tailored to the area, the building, the campus, and the culture of the user organization. Following is a brief description of potential content within the mass notification event questions:

(1) What is the type of emergency event — that is, is it fire, security, safety, health, environmental, geological, meteorological, utility service disruption, or another type of event?
(2) What is the urgency of the emergency event — that is, does it represent immediate danger, has it already occurred, is it expected to occur soon, is it expected to occur in the future, or is its occurrence unknown?
(3) What is the anticipated or expected severity of the emergency event that is, how will it impact our facility and its functions, is it expected to be extreme, severe, etc.?
(4) What is the certainty of the emergency event that is, is it happening now, is it very likely to occur, is it likely to occur, is it possible that it will occur in the future, is it unlikely to occur, or is its occurrence unknown?
(5) What is the location of the event, or from what direction is the emergency event approaching — that is, has it or will it be approaching from the north, south, east, or west?
(6) What zone or areas should receive the emergency message(s) — that is, is it a floor of a building, multiple floors of a building, the entire building, multiple buildings, a campus of buildings, an entire town or city, an entire state, an entire region of states, or an entire country?
(7) What is the validity of the emergency event — that is, has the emergency event been investigated and/or confirmed?
(8) What instructions should we send to our personnel — that is, should they evacuate the facility, should they shelter-in-place, should they shelter-in-place at a special location, should they proceed to a safe haven area, and other action oriented items?
(9) Are there any special instructions, procedures, or special tasks that we need to remind personnel about or to accomplish — that is, close your office door, open your office door, stay away from windows, do not use elevators, and other information relating to personnel actions?

The questions suggested in items (1) through (9) are offered for consideration, and not all of them might be appropriate for every mass notification system installation. It is important to remember that when an emergency event occurs, the response must be immediate and deliberate. Therefore, there is no time for indecision. So the questions selected to reside in the emergency messaging decision tree illustrated in items (1) through (9) must be straightforward and as simple as possible. They must also be tailored to the specific organization, culture, site, and unique requirements of each local environment.

N **24.3.12.1.1** When an owner has developed a risk analysis in accordance with 24.3.12, such risk analysis shall be permitted to be used as a baseline in preparing the risk analysis for new or renovated facilities that are similar in nature.

If an owner already has a baseline risk analysis then they are in a good position to determine the impact on the risk analysis for new or renovated properties and for the requirements of their MNS. This requirement reminds the user of the Code to keep the risk analysis current.

24.3.12.2 The designer shall consider both fire and non-fire emergencies when determining risk tolerances for survivability for the mass notification system.

24.3.12.3 The detail and complexity of the risk analysis shall be commensurate with the complexity of the facility for which the mass notification system is designed.

24.3.12.4 The risk analysis shall be permitted to be limited in scope to address the communication requirements of an existing emergency response plan.

Although it is expected that the owner and design team will perform a complete risk analysis for the building resulting in an emergency response plan, the Code only requires an evaluation of the MNS requirements for communication purposes that is based on the emergency response plan.

System Design Tip

24.3.12.5 The risk analysis shall consider the number of persons, type of occupancy, and perceived peril to occupants.

24.3.12.6 The analysis shall be based on the maximum occupant load calculation for every occupiable room, building, area, space, campus, or region is expected to contain.

24.3.12.7 Occupancy characteristics shall comply with 24.3.12.7.1 and 24.3.12.7.2.

24.3.12.7.1 The risk analysis shall consider characteristics of the buildings, areas, spaces, campuses or regions, equipment, and operations that are not inherent in the design specifications.

24.3.12.7.2 Those elements that are not inherent in the design specifications, but that affect occupant behavior or the rate of hazard development, shall be explicitly identified and included in the risk analysis.

24.3.12.8 The risk analysis shall consider the following types of potential events, which are not all-inclusive but reflect the general categories that shall be considered in the risk analysis:

(1) Natural hazards — Geological events
(2) Natural hazards — Meteorological events
(3) Natural hazards — Biological events
(4) Human caused — Accidental events
(5) Human caused — Intentional events
(6) Technological — Caused events

24.3.12.9 The risk analysis shall include a review of the extent to which occupants and personnel are notified, based on the anticipated event (potential hazard).

24.3.12.10 The risk analysis shall be used as the basis for development of the ECS provisions of the facility emergency response plan.

The risk analysis subsection was expanded for the 2016 edition of the Code to assist the user in developing basic risk analysis techniques. These paragraphs do not represent the total and only approach to risk analysis, but they do give direction to the user and the authority having jurisdiction to ensure that the minimum requirements in a risk analysis are covered. Many of the risk analysis requirements have been strengthened and guidance provided to help the user better understand what part the risk analysis plays in the development of an MNS design and how it should operate.

System Design Tip

24.3.13* Emergency Response Plan Elements. A well-defined emergency response plan shall be developed in accordance with *NFPA 1600* and NFPA 1620 as part of the design and implementation of a mass notification system.

A.24.3.13 The emergency response plan should include, but not be limited to, the following elements:

(1) Emergency response team structure
(2) Emergency response procedures, as follows:
  (a) Building system related emergencies
  (b) Human-related emergencies
  (c) Terrorism-related emergencies
  (d) Weather-related emergencies
(3) Emergency response equipment and operations
(4) Emergency response notification, as follows:
  (a) Emergency message content
  (b) Emergency notification approval process
  (c) Emergency notification initiation process
(5) Emergency response training and drills, as follows:
  (a) Classroom training
  (b) Table-top training
  (c) Live drills

The references to *NFPA 1600®, Standard on Disaster/Emergency Management and Business Continuity/Continuity of Operations Programs,* and NFPA 1620, *Standard for Pre-Incident Planning*, help to provide a better understanding of the requirements and elements of an effective emergency response plan. Paragraph A.24.3.13 touches on a few of the more common elements to consider.

24.3.14 Pathway Survivability.

24.3.14.1 Pathway survivability levels shall be as described in Section 12.4.

Chapter 12 pathway survivability level requirements are referenced based on the need for the ECS to continue functioning during a fire. See the definition of *pathway survivability* in 3.3.198.

24.3.14.2 Other component survivability shall comply with the provisions of 24.4.8.6.6.

24.3.14.3* The pathway survivability requirements in 24.3.14.4 through 24.3.14.12 shall apply to notification and communications circuits and other circuits necessary to ensure the continued operation of the emergency communications system.

A.24.3.14.3 This section is not meant to preclude a performance-based pathway survivability approach. As with most performance-based approaches, documentation should be provided by the designer and maintained with system documentation for the life of the system. Written documentation of the approval from the authority having jurisdiction should also be maintained. A performance-based approach to pathway survivability could be equivalent to, less stringent than, or more stringent than the prescriptive approach in 24.3.14. Often a performance-based approach will result from a risk analysis.

This section is also not meant to preclude less stringent pathway survivability requirements supported by a risk analysis for those unique occupancies that employ emergency voice alarm/emergency communication systems for relocation or partial evacuation as part of their fire safety plan where relocation or partial evacuation could be readily superseded by total evacuation and where buildings are of a type other than Type I or Type II (222) construction where the pathway survivability performance requirement does not need to be for two hours. Examples include low-rise education and day-care occupancies, nursing homes, ambulatory health care occupancies, hotel and dormitory occupancies, and residential board and care occupancies.

Refer to Annex F for previous nomenclature and cross-reference.

24.3.14.4 In-building fire emergency voice/alarm communications systems shall comply with 24.3.14.4.1 or 24.3.14.4.2.

24.3.14.4.1 For systems employing relocation or partial evacuation, a Level 2 or Level 3 pathway survivability shall be required, unless otherwise permitted in 24.3.14.4.1.1 or 24.3.14.4.1.2.

N **24.3.14.4.1.1** Where notification zones are separated by less than 2-hour fire-rated construction, a pathway survivability of Level 1, 2 or 3 shall be permitted.

N **24.3.14.4.1.2** Where Class X or Class N system pathways are installed and the incoming and outgoing pathways are separated by at least one-third the maximum diagonal of the notification zone, a pathway survivability of Level 1, 2 or 3 shall be permitted.

Each level of pathway survivability offers options to meet the survivability requirements. Some users of the Code have mistakenly assumed that a circuit in conduit is survivable. Wire or cable in a raceway such as conduit is mechanically protected, but it cannot survive the impact of fire. Subsection 23.10.2 states that "Fire alarm systems used for partial evacuation and relocation shall be designed and installed such that attack by fire within a notification zone shall not impair control and operation of the notification appliances outside that notification zone." This is the performance description of survivability.

Designers, authorities having jurisdiction, and installers should also ensure that circuits controlling notification appliance circuits and equipment that are common to more than one notification zone are designed and installed such that fire will not disable them.

It does not make sense to require a system of cable installed in the building to be 2-hour rated where buildings are not built with 2-hour fire-rated construction. The wiring for a system installed in such a building is permitted to be Level 1 pathway survivability.

Paragraph 24.3.14.4.1.2 permits alternative methods to the requirement for Level 2 or Level 3 pathway survivability. The information provided is one acceptable method to ensure operational reliability and adequate survivability of an installed ECS by ensuring that wiring passing through the fire floor will not disable the entire circuit connecting the notification appliances above and below the fire floor. The alternative design could also apply to adjacent notification zones.

System Design Tip

• **24.3.14.4.2** For systems that do not employ relocation or partial evacuation, a Level 0, Level 1, Level 2, or Level 3 pathway survivability shall be permitted.

The designer or installer must understand the owner's goals and objectives for the ECS and perform a risk analysis as needed to determine the level of survivability that should be used.

System Design Tip

24.3.14.5 Pathway survivability levels for in-building mass notification systems shall be determined by the risk analysis.

FAQ What are the survivability requirements where an in-building MNS is used?

In-building MNSs may not be required to have pathway survivability requirements depending on the results of the risk analysis. See the definition of *pathway survivability* in 3.3.198. However, if the MNS is integrated with the in-building fire EVACS, then the survivability requirements for cabling must be as defined in 24.3.14.

24.3.14.6 Pathway survivability levels for wide-area mass notification systems shall be determined by the risk analysis.

24.3.14.7 Two-way in-building wired emergency communications systems that are installed where the building has less than 2-hour fire-rated construction shall have a pathway survivability of Level 1, 2, or Level 3.

Two-way in-building wired ECS, formerly called fire fighters' telephones or fire warden telephones, are generally used during fire conditions. The circuits connecting these telephones to the main control must be survivable but are not required to be more survivable than the structure in which they are installed. Also see the commentary following 24.3.14.4.1.2.

The building codes have moved to require the use of emergency responder radio systems (two-way radio communications enhancement systems) and away from two-way in-building wired emergency services communications systems. Where this is the case, a variance will be required by the authority having jurisdiction.

N **24.3.14.8** Two-way in-building wired emergency communication systems that are installed where the building has 2-hour fire-rated construction or greater shall have a pathway survivability of Level 2 or 3.

When these systems are installed for fire fighter use during the fire emergency, it is important that they remain survivable for at least the same time as the fire rating of the building construction. The performance intent of these systems is to ensure that the systems remain operational during the fire. When the systems cannot meet the prescriptive survivability requirements, a performance alternative may need to be reviewed to determine whether the systems will meet the intent of operational reliability during a fire.

24.3.14.9* Area of refuge (area of rescue assistance) emergency communications systems shall comply with 24.3.14.9.1 and 24.3.14.9.3.

A.24.3.14.9 Although in some instances areas of refuge (areas of rescue assistance) might be installed in buildings that use general evacuation and not relocation/partial evacuation, it is still crucial that people awaiting assistance can communicate with emergency responders to facilitate their evacuation. Thus, their evacuation time might be prolonged, and therefore the emergency communications systems should be capable of operating reliably during a fire incident.

Δ **24.3.14.9.1** Area of refuge wired emergency communications systems that are installed where the building has less than 2-hour fire-rated construction shall have a pathway survivability of Level 1, 2, or 3.

System Design Tip

The area of refuge provides a location for building occupants to assemble and await assistance or instructions from the first responders. The circuits connecting the area of refuge communications system to the fire command center must be designed to withstand the attack of fire while the occupants await assistance. Also see the commentary following 24.3.14.4.1.2.

N **24.3.14.9.2** Area of refuge wired emergency communication systems that are installed where the building has 2-hour fire-rated construction or greater shall have a pathway survivability of Level 2 or 3.

When these systems are installed for the occupants staying in the area of refuge to use during the fire emergency, it is important that the circuits remain survivable for at least the same time as the fire rating of the building construction.

24.3.14.9.3 Circuits intended to transmit off-premises shall have a pathway survivability of Level 0, Level 1, Level 2, or Level 3.

Delayed notification to the fire department is one of the major factors in the vast majority of large loss fires (of life or property) in the United States. Designers, installers, and authorities having jurisdiction should review the circuits and pathways connecting to the off-premises transmission component of the fire alarm system to determine what level of survivability is desired or needed for a reliable connection.

System Design Tip

24.3.14.10 Elevator emergency communications systems shall have a pathway survivability of Level 0, Level 1, Level 2, or Level 3.

24.3.14.11 Central command station emergency communications systems shall have pathway survivability as determined by the risk analysis.

24.3.14.12 All other emergency communications system circuits shall have pathway survivability as determined by the risk analysis.

The designer or installer must understand the owner's goals and objectives for all ECS. A risk analysis must be performed as needed to determine what level of survivability should be used.

System Design Tip

24.4* In-Building Fire Emergency Voice/Alarm Communications Systems (EVACS).

Section 24.4 shall be used in the design and application of in-building fire emergency voice/alarm communications for fire alarm systems.

System Design Tip

In-building fire EVACS are usually installed in high-rise and large area buildings, where evacuation of the entire building on every alarm is not practical or desirable. An in-building fire EVACS is more than a fire alarm system that uses a voice message to initiate evacuation of the building. The system is designed to assist emergency response personnel in managing the movement of both building occupants and first responders during a fire or other emergency.

FAQ What systems must comply with the requirements of Section 24.4?

The term *in-building fire emergency voice/alarm communications system* is defined in 3.3.90.1.2 as "dedicated manual or automatic equipment for originating and distributing voice instructions, as well as alert and evacuation signals pertaining to a fire emergency, to the occupants of a building." This definition does not exclude systems used to notify, automatically and simultaneously, all occupants to evacuate the premises. Any in-building fire EVACS using voice messaging must meet the requirements of Section 24.4, although not all systems are required to have all the features described in Section 24.4. For example, the requirements of 24.4.8 are not intended to apply where voice messages are used to simultaneously notify all building occupants to evacuate. Exhibit 24.4 is an example of an in-building fire EVACS.

EXHIBIT 24.4

In-Building Fire Emergency Voice/Alarm Communications System. (Source: Johnson Controls, Westminster, MA)

A.24.4 Where used, recorded voice messages for fire emergency alarm systems should be prepared in accordance with this Code by persons who are experienced with the operation of building fire emergency alarm systems and are knowledgeable of the building's construction, layout, and fire protection plan, including evacuation procedures. The proposed voice messages should be approved by the authority having jurisdiction prior to being implemented. Persons who record the messages for fire emergency alarm systems should be able to read and

speak the language used for the message clearly, concisely, and without an accent that would have an adverse effect on intelligibility.

It is not the intention that in-building fire emergency voice/alarm communications service be limited to English-speaking populations. Emergency messages should be provided in the language of the predominant building population. If there is a possibility of isolated groups that do not speak the predominant language, multilingual messages should be provided. It is expected that small groups of transients unfamiliar with the predominant language will be picked up in the traffic flow in the event of an emergency and are not likely to be in an isolated situation.

24.4.1 Automatic Response. The in-building fire emergency voice/alarm communications system shall be used to provide an automatic response to the receipt of a signal indicative of a fire alarm or other emergency.

The sequence of operation and actual voice messages will be different for each building, but the fire alarm system must automatically actuate the emergency voice/alarm sequence unless the conditions of either 24.4.1.1 or 24.4.1.2 apply.

24.4.1.1 When the monitoring location is constantly attended by trained operators, and operator acknowledgment of receipt of a fire alarm or other emergency signal is received within 30 seconds, automatic response shall not be required.

If the system is constantly attended by trained operators, then automatic actuation is not required. This often applies to an in-building fire EVACS installed in a large building. The operators are fully trained and competent and have the authority to initiate appropriate action based on the fire safety plan for the facility.

24.4.1.2 If acceptable to the authority having jurisdiction, the system shall permit the application of an automatic evacuation signal to one or more signaling zones and, at the same time, shall permit manual voice paging to the other signaling zones selectively or in any combination.

With the permission of the authority having jurisdiction, the system can be arranged to provide manual voice paging to some signaling zones while providing automatic evacuation signals to other zones. The arrangement(s) permitted will depend in large part on the building's evacuation plan. This can be helpful during an emergency by allowing an authorized individual to make announcements about the emergency on floors (such as in a high-rise) unaffected by the emergency. Such announcements may include advising those who have not evacuated about the status of the incident and providing information on whether or not to evacuate certain floors.

24.4.2 Voice Evacuation Messages.

24.4.2.1 Unless otherwise permitted by 24.4.8, evacuation messages shall be preceded and followed by a minimum of two cycles of the emergency evacuation signal specified in 18.4.2.

FAQ Is the standard evacuation signal required to precede an evacuation message?

The operating sequence for voice messages intended to initiate evacuation is two cycles of the standard evacuation signal (tone) followed by the voice message with evacuation instructions followed by two more cycles of the evacuation signal. The sequence is typically repeated three to five times followed

by continuous sounding of the evacuation signal or continuous repeating of the message. If a simple paging announcement (not for evacuation) is made, there is no need of preceding the page with two cycles of the standard evacuation signal (tone). A request for the occupants' attention to the message would suffice.

24.4.2.2 Voice messages shall comply with the requirements of 24.3.1.

24.4.2.2.1 The following requirements shall be met for layout and design:

(1) The loudspeaker layout of the system shall be designed to ensure intelligibility and audibility.
(2) Intelligibility shall first be determined by ensuring that all areas in the building have the required level of audibility.

Loudspeakers should not be located near the in-building fire EVACS control equipment. If a loudspeaker is too close to the microphone, audio feedback will distort the manual page message by the fire commander using the microphone. The same design concept applies to where fire fighters' telephones are located.

System Design Tip

24.4.2.2.2* System design shall incorporate designation of acoustically distinguishable spaces (ADS) within the occupiable areas as required in Chapter 18.

A.24.4.2.2.2 Generally speaking, in a standard building configuration with normal ceiling height [8 ft to 12 ft (2.4 m to 3.7 m)], normal ceiling construction (e.g., drop acoustical ceiling tiles), standard wall configurations, and finishes and carpeted floors, ceiling-mounted loudspeakers should be installed in all normally occupiable spaces and in corridors spaced at a maximum of twice the ceiling height or as determined by a commercially available computer acoustical/loudspeaker modeling program. Where wall-mounted loudspeakers are used, manufacturer recommendations should be reviewed and/or computer modeling should be employed. One of the goals of loudspeaker placement is to provide the shortest practical distance from the source (loudspeaker) to the recipient (person hearing the signal). In many applications, a combination of wall- and ceiling-mounted loudspeakers might be required. The audibility and intelligibility of the loudspeakers can be impacted by the tap/setting at which the loudspeaker is connected and should meet the audibility requirements of the Code while still having the message intelligible. Connecting to a high setting to meet the audibility requirements of the Code could distort the intelligibility of the signal.

In an ADS that is a non-acoustically challenging area, designing for audibility will typically result in an intelligible system provided minimum loudspeaker guidelines are followed. Areas typically considered to be non-acoustically challenging include traditional office environments, hotel guest rooms, dwelling units, and spaces with carpeting and furnishings.

Special attention must be given to acoustically challenging ADSs. Such areas might incorporate appreciable hard surfaces (e.g., glass, marble, tile, metal, etc.) or appreciably high ceilings (e.g., atriums, multiple ceiling heights). These conditions will require more stringent design guidelines to ensure intelligibility (e.g., a closer than normal loudspeaker spacing with lower taps). This can help reduce the effect of excessive reverberation and result in better intelligibility. In extreme cases there could be areas where intelligibility is not attainable, but this can be acceptable if there is an ADS within 30 ft (9.1 m) where the intelligibility of the system is deemed adequate.

In an ADS where the ambient noise level exceeds 85 dB it is acknowledged that intelligibility might not be attainable and an alternate means of notification is required.

Design guidance is provided in the NEMA Standards Publication SB 50-2008, *Emergency Communications Audio Intelligibility Applications Guide*.

System Design Tip

It is imperative that the designer assign the correct number of loudspeakers throughout the building for proper audibility and intelligibility. In standard 10 ft to 12 ft (3.0 m to 3.7 m) ceiling height environments, a good rule of thumb is to install loudspeakers in every occupied space and at intervals of twice the ceiling height. Of course, the ambient noise level of the areas served by the loudspeakers must be considered to ensure that the sound pressure levels of the loudspeakers are at the correct levels for both audibility and intelligibility of the loudspeaker system. The acoustical properties of the space must also be considered; reverberant areas may need additional design attention. Designers are cautioned against replacing existing non-voice notification appliances with loudspeakers on a one-for-one basis. The resulting design should not be expected to meet the intelligibility requirements of the Code.

24.4.2.2.3 Audibility shall be required in all areas in accordance with Chapter 18.

24.4.3 Positive Alarm Sequence. In-building fire emergency voice/alarm communications systems shall be permitted to use positive alarm sequence complying with 23.8.1.2.

Positive alarm sequence essentially delays notification to the occupants, allowing time for security or authorized personnel to investigate and confirm the fire condition. The use of positive alarm sequence also requires the permission of the authority having jurisdiction. For a more detailed discussion of this concept, refer to the commentary following 23.8.1.2.

24.4.4 Tones. The tone preceding any message shall comply with 24.4.4.1 through 24.4.4.4.

24.4.4.1 The tone preceding any message shall be permitted to be a part of the voice message or to be transmitted automatically from a separate tone generator.

Depending on the goals and objectives of the owner and whether or not the in-building fire EVACS is to be used as a paging system or combined as an MNS, the tone may need to be separate from the voice message.

24.4.4.2* Except as specified in 24.4.4.3, in occupancies where sleeping accommodations are provided and the voice message is intended to communicate information to those who could be asleep, a low frequency tone that complies with 18.4.6 shall be used.

A.24.4.4.2 The intent of this low frequency tone is to accommodate those with mild to severe hearing loss. See also 18.4.6, A.18.4.6.1, and A.29.5.10.2. The effective date listed in Chapter 18 for using a low frequency signal has not been allowed in 24.4.4 because voice systems are easily adapted to comply, whereas the requirements of 18.4.6 also apply to stand-alone tone signaling appliances.

Research has shown that the low frequency tone is important to awaken sleeping individuals. Using it as a tone to precede voice messages helps make sure that the entire message will be heard after the individual is awakened by the tone. Research showed that a low frequency signal was more successful at awakening the very young and the elderly than a traditional higher frequency (3000 Hz) signal, a finding that had significant life safety ramifications for these groups. Paragraph 18.4.6.3 requires all sleeping areas to have listed low frequency (520 Hz) audible appliances provided to awaken the occupants.

The Code clearly states the requirement and requires that the notification equipment be listed for producing the low frequency tone. The use of either a listed stand-alone appliance or a listed fire alarm system consisting of a recorded or synthesized low frequency signal delivered through an amplifier and loudspeaker is permitted. An ECS would more likely use this latter method to produce the required signal. Refer to the commentary following 18.4.6.3 and the last paragraph of the FAQ following 29.5.7.

24.4.4.3* In areas where sleeping accommodation are provided, but the voice communication system is used to communicate to occupants who are awake, the low frequency tone shall not be required.

A.24.4.4.3 Sleeping accommodations are provided in occupancies such as healthcare, detention and correction, and other occupancies where it would not be necessary to utilize a low frequency tone that awakens those sleeping. For example, in a hospital, the voice message is used to notify staff members who are already awake. The staff will then respond to the appropriate location in the hospital to carry out their duties that could include awakening and relocating patients who could be in danger. In addition, fire drills are required to be conducted on a regular basis and providing a low frequency tone could unnecessarily awaken patients, which would be detrimental to their care.

24.4.4.4 Audible signal tones for alert or evacuation shall meet the audibility requirements of either 18.4.4 (public mode audible requirements), 18.4.5 (private mode audible requirements), 18.4.6.1 and 18.4.6.2 (sleeping area requirements), or 18.4.7 (narrow band tone signaling for exceeding masked thresholds), as applicable.

24.4.5 Operating Controls.

FAQ

What term is used in 24.4.5 instead of the term *fire command center* or *emergency command center*?

For the 2016 and 2019 editions of the Code, the term *operating controls* is used instead of *fire command center* to avoid implying the requirement for a separate room(s) and to avoid the use of terminology that might conflict with the use of the term in other codes and standards. The building or life safety codes in force in a jurisdiction normally dictate the location of the fire command center where these controls will be located. Although 24.4.5 now uses the term *operating controls*, the term *fire command center* is still defined in 3.3.112 and is used in other parts of the Code. The selection of a different term does not change the concept of the functions historically associated with the term *fire command center*. The term *emergency communications system — emergency command center* is defined in 3.3.92.

24.4.5.1* Controls for the in-building fire emergency voice/alarm communications system shall be at a location approved by the authority having jurisdiction.

A.24.4.5.1 The choice of the location(s) for the in-building fire emergency voice/alarm communications control equipment should also take into consideration the ability of the fire alarm system to operate and function during any probable single event. Although *NFPA 72* does not regulate either building construction or contents, system designers should consider the potential for an event that could damage the equipment, including remotely located control devices, to disable the system or a portion thereof. Where practical, it is prudent to minimize unnecessary fire exposures of fire alarm control equipment through the use of fire-rated construction or enclosures, by limiting adjacent combustibles and ignition sources, or other appropriate means.

The controls for the system should be located where required by the authority having jurisdiction. Factors in selecting the location include ease of access during an emergency, adequate space for the incident command staff, and protection from the effects of smoke and fire during an incident. It is important that the location of the controls is appropriate for dealing with other types of emergencies as well. For example, in a tornado-prone area, placing the controls in a room on an exterior wall with windows is not recommended.

24.4.5.2 Controls shall be located or secured to allow access only by trained and authorized personnel.

This does not prohibit the installation of remote equipment with voice capability in areas other than the main control equipment.

24.4.5.3 Operating controls shall be clearly identified.

FAQ What is a good way to ensure that operating controls are marked clearly?

System Design Tip

The best way to ensure that the purpose of operating controls is clear is to ask the fire department how they want the controls marked. A marking that is clear to a designer who is intimate with every system detail may mean nothing to a fire officer responding to the building. Because the controls are for fire department use, they should be labeled as designated by the fire department. Also refer to the requirements of Section 18.11 and the guidance provided in A.18.11.

24.4.5.4 If there are multiple in-building fire emergency voice/alarm communications control locations, only one shall be in control at any given time.

If multiple control locations and multiple people are attempting to transmit emergency messages, confusion could result. Paragraphs 24.4.5.4 and 24.4.5.5 are provided to control how many messages can be issued at one time to avoid conflicting message announcements.

24.4.5.5 The location having control of the system shall be identified by a visual indication at that location.

24.4.5.6 Manual controls shall be arranged to provide visual indication of the on/off status for their associated signaling zone.

24.4.5.7 If live voice instructions are provided, they shall perform as follows:

(1) They shall override previously initiated signals to the selected notification zone.
(2) They shall have priority over any subsequent automatically initiated signals to the selected notification zone.
(3) If a previously initiated recorded message is interrupted by live voice instructions, upon release of the microphone, the previously initiated recorded messages to the selected notification zones shall not resume playing automatically unless required by the emergency response plan.

When fire department personnel arrive on the scene, they must be able to override all previously initiated recorded voice instructions and provide to the building occupants up-to-date information and instructions specific to the emergency and current conditions.

In-building fire EVACS can be effective by calming occupants in areas remote from the fire and by directing others to safety. Emergency personnel who will be operating the in-building fire EVACS during an emergency must be thoroughly familiar with the system and its operation. This familiarity requires effective initial and follow-up training. Actual on-site drills may be required to understand the operation and use of the system fully.

Since the manual message will possibly remove the need for the automatic message or conflict with its instruction because the emergency responders have more current information, 24.4.5.7(3) restricts replay of the recorded message.

24.4.6 Loudspeakers.

24.4.6.1* Loudspeakers and their enclosures shall be installed in accordance with Chapter 18.

A.24.4.6.1 Loudspeakers located in the vicinity of the in-building fire emergency voice/alarm communications control equipment or MNS equipment should be arranged so they do not cause audio feedback when the system microphone is used. Loudspeakers installed in the area of two-way telephone stations should be arranged so that the sound pressure level emitted does not preclude the effective use of the two-way telephone system. Circuits for loudspeakers and telephones should be separated, shielded, or otherwise arranged to prevent audio cross-talk between circuits.

The layout of the loudspeakers must be examined to make certain that the proper number is installed to achieve both audibility and intelligibility. See A.24.4.2.2.2 and its associated commentary.

24.4.6.2 Loudspeakers used as alarm notification appliances on fire alarm systems shall also be permitted to be used for mass notification.

24.4.7 Priority.

24.4.7.1* Notification appliances required to provide special suppression predischarge notification shall not be overridden by other systems.

A.24.4.7.1 Special suppression systems that are delivered through a total flooding or localized application include, but are not limited to, carbon dioxide, clean agents, halons, and other extinguishing agents. Special suppression systems require audible and visual warning alarms to provide personnel the opportunity to evacuate or to alert personnel not to enter the area of discharge that could be hazardous to life. A special suppression system discharge can be a life-threatening hazard for personnel who are not notified and, therefore, fail to react to the pre-discharge alarm. In such cases, pre-discharge and discharge alarms should be independent of the fire alarm loudspeakers that are used as part of the mass notification system. A special suppression system discharge could pose a greater threat to personnel that are located in the protected area, or that could enter the protected area, if the local signals were to be overridden and they did not receive the appropriate warning.

24.4.7.2 Priority of mass notification messages over fire alarm evacuation shall be permitted when evaluated by the stakeholders through a risk analysis in accordance with 24.3.12.

24.4.7.3 When the fire alarm system has been activated, and mass notification has been given priority over the fire alarm system, a distinctive audible and visual indication shall be provided at the building fire alarm control unit to indicate MNS is active.

24.4.7.4 It shall not be required to transmit this condition to a supervising station.

24.4.7.5 The fire alarm system shall not automatically override emergency mass notification messages.

24.4.8* Relocation and Partial Evacuation. The requirements of 24.4.8 shall apply only to systems used for relocation or partial evacuation during a fire condition.

System Design Tip

Fire alarm systems designed for partial evacuation, selective evacuation, or relocation of building occupants must have a degree of survivability to maintain communication with occupants who remain in the building during a fire. Total evacuation of a high-rise building or large area manufacturing facility may not be practical. An in-building fire EVACS can be used to provide instructions to specific areas of the building. In a high-rise building, the floor on which an alarm originates, the floor above, and the floor below may receive a message to evacuate the building. Persons on other floors may be told to await

further instructions. The EVACS must be able to remain in service to maintain communication with the occupants remaining in the building.

A.24.4.8 When a fire or other emergency occurs in a building, the usual goal is to evacuate the occupants or relocate them so that they are not exposed to hazardous conditions. The exception occurs in occupancies using stay-in-place/defend-in-place (SIP/DIP) [1] strategies. It might also be necessary to alert and provide information to trained staff responsible for assisting evacuation or relocation. Figure A.24.4.8 shows several key steps in a person's reaction and decision-making process [2].

Occupants rarely panic in fire situations [3,4]. The behavior that they adopt is based on the information they have, the perceived threat, and the decisions they make. The entire decision path is full of thought and decisions on the part of the occupant, all of which take time before leading to the development of adaptive behavior. In hindsight, the actions of many occupants in real fires are sometimes less than optimal. However, their decisions might have been the best choices given the information they had. Fire alarm systems that only use audible tones and/or flashing visual notification appliances impart only one bit of information: fire alarm. It has long been recognized that environments having complex egress situations or high hazard potentials require occupant notification systems that provide more than one bit of information [5]. To reduce the response time of the occupants and to effect the desired behavior, the message should contain several key elements [3,6].

The key elements include the following:

(1) Tell occupants what has happened and where
(2) Tell occupants what they should do
(3) Tell occupants why they should do it

There does not seem to be any research that has tested actual message content to determine the best way to inform occupants. The problem is that each building and each fire is unique. Messaging is further complicated by the need to give different information to different people, depending on their location relative to the fire, their training, and their physical/mental capabilities.

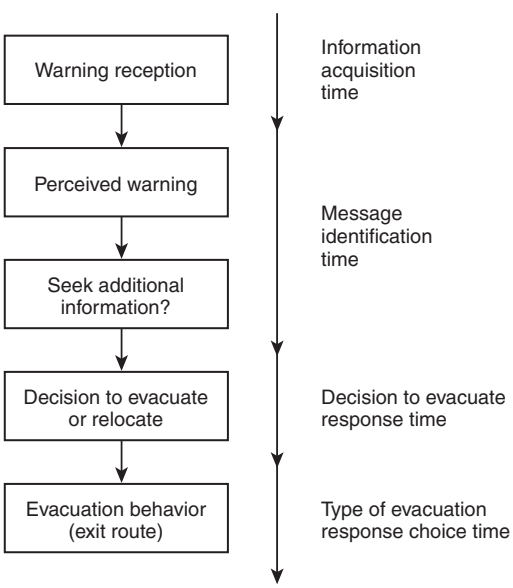

FIGURE A.24.4.8 *Key Steps in Person's Reaction.*

Messages should use positive language and avoid negative instructions that could be misinterpreted due to unintelligible communications. For example, if you want people to leave an area, say so: "A fire has been reported in the area. For your safety, use the stairs to evacuate the area immediately." A bad example is: "The signal tone you have just heard indicated a report of an emergency. If your floor evacuation signal sounds after this message, do not use the elevator, walk to the nearest stairway and leave the floor. While the report is being verified, occupants on other floors should await further instructions." This message is too long, ambiguous, and subject to misunderstanding if not heard clearly. The word "not" might not be heard clearly, or it might be heard to apply to the entire remaining sentence. Similarly, care should be used in selecting and clearly enunciating words such as "fifth" and "sixth," which can sound the same if the system and environment lead to low intelligibility.

See A.24.3.6.1 for more information on methodology for improved message content, structure, and intelligibility. Refer to Annex D for more information on speech intelligibility and how it is predicted.

Content of the message should be predicated on the emergency response plan, the nature of the building and its occupants, the design of the fire alarm system, and testing of the occupant reaction to the message. Caution is advised that the fire alarm system operation and message actuation might be initiated by a manual pull station or detector remote from the fire.

[1] Schifiliti, R. P., "To Leave or Not to Leave — That is the Question!", National Fire Protection Association, World Fire Safety Congress & Exposition, May 16, 2000, Denver, CO.
[2] Ramachandran, G., "Informative Fire Warning Systems," *Fire Technology*, vol. 47, no. 1, February 1991, National Fire Protection Association, 66–81.
[3] Bryan, J., "Psychological Variables That May Affect Fire Alarm Design," *Fire Protection Engineering*, Society of Fire Protection Engineers, Issue No. 11, Fall 2001.
[4] Proulx, G., "Cool Under Fire," *Fire Protection Engineering*, Society of Fire Protection Engineers, Issue No. 16, Fall 2002.
[5] General Services Administration, Proceedings of the Reconvened International Conference on Fire Safety in High Rise Buildings, Washington, D.C., October 1971.
[6] Proulx, G., "Strategies for Ensuring Appropriate Occupant Response to Fire Alarm Signals," National Research Council of Canada, Ottawa, Ontario, *Construction Technology Update*, No. 43, 1–6, December 2000.

24.4.8.1 New systems employing relocation or partial evacuation shall require documentation in accordance with Sections 7.3, 7.4, and 7.5 in addition to the minimum documentation requirements of Sections 7.2 and 24.13.

It may be important to secure documents for both the building and the MNS design and operation so that this information is not used in a plot against the occupants of a building. The MNS plays a key role in the response to an incident, and measures should be taken to safeguard the system from being impaired by unauthorized persons.

24.4.8.2 Systems shall be provided with manual voice transmission capabilities selectively to one or more notification zones or on an all-call basis.

24.4.8.3 Where the system is used to transmit relocation instructions or other fire emergency non-evacuation messages, a 1-second to 3-second alert tone followed by a message (or messages where multi-channel capability is used) shall be provided.

The alert tone must not be used when transmitting non-fire messages to the building occupants. The intent is to permit the in-building fire EVACS to be used with other communications systems, such as telephone paging and PA systems.

24.4.8.3.1 The sequence [the alert tone followed by the message(s)] shall be repeated at least three times to inform and direct occupants in the signaling zone where the alarm initiation originated, as well as other signaling zones in accordance with the building fire safety plan.

24.4.8.3.2 Approved alternative fire alarm notification schemes shall be permitted as long as the occupants are effectively notified and are provided instructions in a timely and safe manner in accordance with the emergency response plan.

N **24.4.8.4** Where the system is used to transmit partial evacuation instructions, the alert tone specified in 24.4.2.1 followed by a message (or messages where multi-channel capability is used) shall be provided.

The alert tone is used to get the occupant's attention to inform them that an important message will follow the tone.

24.4.8.5 Where provided, loudspeakers in each enclosed stairway, each exit passageway, each occupant evacuation elevator lobby, and each group of elevator cars within a common hoistway or bank shall be connected to separate notification zones for manual paging only.

If loudspeakers are required in stairways by the local building code, NFPA *101*, or project specifications, they must be on a separate notification zone. Usually, people who are in the stairway when the system is actuated are already on their way out of the building and do not need additional instructions. If they exit the stairway on a particular floor, they will hear the voice message with instructions for the occupants of that particular floor. Manual paging allows emergency personnel to provide updated instructions to occupants who are in the stairway for an extended time during a prolonged emergency, particularly in very tall buildings where evacuation may take more than an hour. Refer to 23.8.6.2 for notification appliance allowances in stairways.

24.4.8.5.1 The evacuation signal specified in 18.4.2 shall not operate in elevator cars, exit stair enclosures, and exit passageways.

Since occupants in elevator cars, exit stair enclosures, and exit passageways are already evacuating or will encounter other people evacuating, an evacuation signal is not needed in these areas.

24.4.8.5.2 Manually activated loudspeakers shall be permitted in exit stair enclosures, exit passageways, and elevators in buildings that have emergency voice/alarm communications systems in accordance with Section 24.4.

24.4.8.6 The requirements of 24.4.8.6 shall apply to both audible (tone and voice) and visual notification appliance circuits.

24.4.8.6.1* Fire alarm systems used for partial evacuation and relocation shall be designed and installed such that attack by fire within a signaling zone does not impair control and operation of the notification appliances outside the signaling zone.

The circuits, wiring, or communications paths to each signaling zone must be arranged so that damage to those paths in one signaling zone will not impair communications to any other signaling zone. Survivability requirements minimize the possibility of a fire causing damage to the notification appliance riser cables in the fire area that would interrupt communications outside the fire area. The survivability requirements also prevent damage to notification appliance equipment serving other areas of the building, which might be in the fire area. Survivability is not intended to maintain every device, appliance, and circuit in service for the duration of the fire.

For example, assume that each floor in a high-rise building is a signaling zone. Circuits that serve the individual floors may be routed through areas where they could be exposed to fire before they reach another floor or area they serve. Fire-rated construction, a fire-rated circuit integrity cable, a fire-rated cable system, or other approved protection minimizes the potential of early damage to circuits that serve areas outside the immediate fire area.

If amplifiers are distributed in a way to serve multiple floors (loudspeaker circuits), the amplifiers and their interconnection to the circuits supplied by those amplifiers must meet the survivability requirements. Alternating loudspeaker circuits on each floor does not provide compliance with the survivability requirements. Specific fire alarm devices, appliances, and components on the fire floor can be compromised by direct fire exposure.

Although 24.4.8.6 applies to EVACS, these requirements should be used for any system used for partial evacuation, selective evacuation, or relocation of occupants. For example, hospitals use coded signals to indicate the location of and response to a fire emergency. The intent is to have survivability requirements apply to both voice and nonvoice systems used to partially or selectively evacuate or relocate the building occupants by floor or zone. See 24.3.14 for in-building fire EVACS and Section 23.10 for fire alarm systems using tone.

A.24.4.8.6.1 Along with the pathway survivability requirements, one or more of the following means could be considered acceptable to provide a level of survivability consistent with the intent of this requirement:

(1) Routing notification appliance circuits separately

The practice of routing circuits separately is not to be confused with using what is popularly called A – B circuits — that is, alternately connecting loudspeakers serving the same space or corridor on two separate circuits installed in the same space or raceway.

(2) Using short-circuit, fault-tolerant signaling line circuits for controlling evacuation signals

The requirement for notification appliances to operate in those signaling zones that are not attacked by fire will also require that circuits and equipment that are common to more than one signaling zone be designed and installed such that the fire will not disable them. For instance, a signaling line circuit used to control notification appliances in multiple signaling zones should be properly designed and installed so that one fire would not impair the signaling line circuit, rendering the notification appliances serving more than one signaling zone inoperative.

24.4.8.6.2 Performance features provided to ensure operational reliability under adverse conditions shall be described and technical justification provided in the documentation submitted to the authority having jurisdiction with the analysis required in 23.4.3.1.

Other adverse conditions besides a fire could occur where continued operation of the communications system would be imperative. These conditions are identified by consulting with the owner and performing a risk analysis. The results of the risk analysis are required to be documented and presented to the authority having jurisdiction.

24.4.8.6.3* All circuits necessary for the operation of the notification appliances shall be protected until they enter the notification zone that they serve by the protection provided by the pathway survivability level required in 24.3.14.4.1 or by performance alternatives approved by the authority having jurisdiction.

The system must be designed and installed in a way that minimizes the potential for fire exposure in a single signaling zone from interrupting communications to other signaling zones. Using one of the

System Design Tip

System Design Tip

methods listed in Chapter 12, as required in 24.3.14.4.1, provides a minimum degree of protection for the circuit to meet the survivability requirements.

All fire alarm system wiring installations must conform to the requirements of the *NEC*. Article 760, Fire Alarm Systems, contained in Chapter 7, permits the use of Chapter 3 general wiring methods as well as the use of specific types of non-power-limited and power-limited cables. The wiring method used must be installed in accordance with the manufacturer's instructions, any listing limitations, and the requirements of the *NEC*.

The authority having jurisdiction may approve other methods of providing the protection. This might be a combination of installation methods and protection by the building structure. Technical justification must be provided by the designer to support the survivability design.

The goal is to ensure communications during a fire to occupants on the non-fire floors. Designers, installers, and authorities having jurisdiction should make certain that all circuits necessary for the operation of the notification appliances (including loudspeakers and visual notification appliances) are survivable regardless of how the circuits are connected and installed.

A.24.4.8.6.3 Paragraph 24.4.8.6.3 requires the protection of circuits as they pass through fire areas other than the one served. The purpose of this is to delay possible damage to the circuits from fires in areas other than those served by the circuits and to increase the likelihood that circuits serving areas remote from the original fire will have the opportunity to be actuated and serve their purpose. Note that the protection requirement would also apply to a signaling line circuit that extends from a master fire alarm control unit to another remote fire alarm control unit where notification appliance circuits might originate.

24.4.8.6.4 Where the separation of in-building fire emergency voice/alarm control equipment locations results in the portions of the system controlled by one location being dependent upon the control equipment in other locations, the circuits between the dependent controls shall be protected against attack by fire by the protection provided by the pathway survivability level required in 24.3.14.4.1 or by performance alternatives approved by the authority having jurisdiction.

Where control equipment for in-building fire EVACS is in multiple locations, damage to the interconnecting wiring can affect operability of the control equipment in one location or another. Protection of these circuits is required in a similar way to what is specified for notification appliance circuits.

This paragraph, in conjunction with 24.4.8.6.6, closes the loop on circuits and equipment that need to be survivable against an attack by fire. The goal is to ensure that all circuits and equipment affecting the ability to communicate above and below the fire floor during the fire meet the survivability requirements.

24.4.8.6.5 Protection of circuits between redundant control equipment locations that are not mutually dependent shall not be required.

24.4.8.6.6 Where the separation of the in-building fire emergency voice/alarm control equipment occurs as in 24.4.8.6.4, and where the circuits are run through junction boxes, terminal cabinets or control equipment, such as system control units, power supplies and amplifiers, and where cable integrity is not maintained, these components shall, in addition to the pathway survivability required by 24.3.14.4.1, be protected by using one of the following methods:

(1) A 2-hour fire–rated enclosure
(2) A 2-hour fire–rated room
(3) Other equivalent means to provide a 2-hour fire resistance–rating approved by the authority having jurisdiction

This paragraph, in conjunction with 24.4.8.6.4, ensures that everything connecting the pathways and circuits, or the equipment necessary to operate the notification appliances, will meet the requirements of survivability and maintain the communications system's operational capability, as described in 24.4.8.6.1.

24.4.9 Signal Zoning.

24.4.9.1* Undivided fire or smoke areas shall not be divided into multiple notification zones.

A.24.4.9.1 Paragraph 24.4.9.1 does not prohibit the provision of multiple notification appliance circuits within a notification zone.

The division of a single fire or smoke area into more than one signaling zone is not practical. If a fire threatens one part of the zone, then the entire zone should be evacuated.

24.4.9.2 If multiple notification appliance circuits are provided within a single zone, all of the notification appliances within the zone shall be arranged to activate or deactivate simultaneously, either automatically or by actuation of a common manual control.

A *signaling zone*, defined in 3.3.328.2, is "an area consisting of one or more notification zones where identical signals are activated simultaneously." *Notification zones,* defined in 3.3.328.1, are areas of a building where the occupants receive common notification. The boundaries of the signaling zone are a function of the building fire safety subdivisions and the building emergency evacuation plan.

Signaling to a single signaling zone may need to be accomplished with more than one notification appliance circuit. In this situation, all the notification appliance circuits serving the signaling zone must be arranged to operate simultaneously.

24.4.9.3 Where there are different notification appliance circuits within a signaling zone that perform separate functions, such as presignal and general alarm signals and predischarge and discharge signals, they shall not be required to activate or deactivate simultaneously.

24.5* In-Building Mass Notification Systems.

The requirements of Section 24.5 shall apply to mass notification systems installed in buildings or structures for the purpose of notifying and instructing occupants in an emergency.

A.24.5 This section covers the application, installation, location, performance, and maintenance of mass notification systems used for emergency purposes.

An in-building mass notification system is considered to be a system used to provide information and instructions to people in a building(s) or other space using intelligible voice communications and including visual signals, text, graphics, tactile, or other communication methods.

Mass notification systems can consist of fully independent systems with minimal or no interface with the building fire alarm system, systems that report trouble and supervisory signals through the fire alarm system, systems that share audible and visual notification circuits and appliances with the fire alarm system, or combination mass notification and fire alarm systems.

24.5.1* General Performance. The performance, selection, installation, operation, and use of a mass notification system shall comply with the requirements of Section 24.5.

A.24.5.1 Although some minimum criteria are outlined for a particular feature, the feature might not be applicable for every project.

The information and instructions delivered by a mass notification system could be initiated manually by an operator or automatically by sensors or other systems and might be delivered to the target audience using prerecorded messages or live messages, or both, tailored to the situation and the audience.

Each mass notification system could be different, depending on the anticipated threat and the level of protection intended. As an example, a particular project might not require secure radio transmissions. As such, criteria for such would not apply. However, if the authority having jurisdiction or design professional has specified secure radio transmissions, the minimum applicable criteria within this document would be required. Deviation from these minimum criteria would require approval of the stakeholders.

Mass notification systems can consist of fully independent systems with minimal or no interface with the building fire alarm system, systems that report trouble and supervisory signals through the fire alarm system, systems that share audible and visual notification circuits and appliances with the fire alarm system, or combination mass notification and fire alarm systems.

Fire alarm signals must take precedence, except where mass notification messages (as determined by the risk analysis) are deemed to be a higher priority than fire. See 24.5.1.8. Examples of instances where such messages would be used include a terrorist event or an active shooter in the building.

24.5.1.1 Interconnection of protected premises emergency control functions with the mass notification systems shall comply with Chapter 21.

24.5.1.2 An in-building mass notification system shall include one or more of the following components:

(1) Autonomous control unit (ACU)
(2) Local operating console (LOC)
(3) Fire alarm control interface

Exhibit 24.5 shows an example of a fire alarm interface.

(4) Notification appliance network
(5) Initiating devices
(6)* Interface to other systems and alerting sources

A.24.5.1.2(6) Other systems could include wide-area mass notification, distributed recipient mass notification, and regional and national alerting.

EXHIBIT 24.5

Fire Alarm Interface. (Source: Siemens Building Technologies, Inc., Buffalo Grove, IL)

FAQ Which communications methods are most effective for MNSs?

MNS designs typically use more than one form of communication — one from Layer 1 and a secondary method from one of the other layers described in 24.3.8 and A.24.3.8. Also see the commentary following A.24.3.8. Relying on just one method in an emergency could result in a relatively large portion of the targeted population not receiving the message. The use of Layer 1 and secondary layer systems produces a reliable and robust design that meets the owner's goals and objectives (see 24.12.1).

System Design Tip

24.5.1.3 All mass notification system notification appliances that receive their power from a signaling line circuit of a mass notification system control unit shall be listed for use with the control unit.

24.5.1.4 Mass notification system components shall be installed, tested, and maintained in accordance with the manufacturer's published instructions and this Code.

24.5.1.5 In-building emergency mass notification operation shall be permitted to be initiated by manual or automatic means.

24.5.1.6 Mass notification system activation shall initiate recorded messages or live voice and visual notification.

24.5.1.7 The priority level of recorded messages shall be determined by the emergency response plan.

The priority levels will be based on an evaluation of a number of issues, including occupancy, impact on individual security, danger to life, danger to the community, or danger and impact on the nation. These priorities will also be used to determine whether any mass notification message should take precedence over a fire alarm message, as stated in 24.5.1.8. Examples of instances where such messages would be used include a terrorist event or an active shooter in the building.

24.5.1.8 Only recorded messages determined by the emergency response plan to be of higher priority than fire alarm activation shall be permitted to override the fire alarm notification and initiate the mass notification priority indicator.

24.5.1.9 Activation of any other recorded message shall not interfere with the operation of fire alarm notification.

An example of a recorded message in this situation is a periodic timed general announcement, as may occur in an airport. Such a message is not permitted to override fire alarm messages and tones during a fire alarm condition.

24.5.1.10 Initiation of live voice announcements from microphones on the fire alarm system at an ACU, and at an LOC, shall not automatically place the fire alarm system in a mass notification priority mode.

24.5.1.11 Combination of mass notification with fire alarm systems shall be permitted and shall meet the requirements of 23.8.4.

Combining or integrating in-building fire EVACS with other communications systems — such as mass notification, PA, and paging systems — is permitted. The fire alarm or priority mass notification messages (as determined by a risk analysis) must take precedence over any other announcement, such as

paging from a telephone system or other PA system. In addition to reduced design, installation, and ongoing life cycle costs, regular use of the system for normal paging functions provides an end-to-end test of the audible notification components and circuits. Occupants familiar with use of the system for normal paging are also more likely to be comfortable and proficient in use of the system during an emergency.

24.5.2 System Operation.

24.5.2.1* Authorized personnel shall be permitted to control message initiation over the mass notification system.

A.24.5.2.1 Authorized personnel could include building occupants who can readily access and originate messages in emergency situations. Depending on the individual facility, use of the mass notification system to originate non-emergency messages could also be permitted. The selection of authorized personnel should be based on a risk assessment and the building emergency response plan.

24.5.2.2* Where required by the emergency response plan, the mass notification system shall provide the capability for authorized personnel to remotely activate live and prerecorded emergency messages.

A.24.5.2.2 Authorized personnel could initiate message signaling over the mass notification system from either an emergency command center or a secondary (backup) control station(s). In cases where clusters of facilities within the same geographical region exist, one or more regional control stations could initiate message signaling. The mass notification system could permit activation of messages originated by mobile sentries and roving patrols using wireless activation devices. Since it is common practice to allow mass notification systems to be utilized for "nonemergency" messages, the emergency command center should incorporate a clearly marked and easy to operate means to distinguish between emergency and nonemergency use. Comprehensive training and a fail-safe default to the emergency mode of operation should be employed to ensure that no actual emergency message gets transmitted as a nonemergency broadcast.

MNS operation is essentially driven by the emergency response plan. Paragraph A.24.5.2.2 states that nonemergency operation of the system be distinguishable from emergency operation. Also, the staff in the emergency command center (ECC) must understand the importance of defining the messages clearly as emergency and nonemergency types.

24.5.2.3* Operating controls shall be clearly identified.

A.24.5.2.3 As a general practice, the number of message selection switches included as part of the operating controls should be limited, so that authorized personnel can utilize the system with only minimal familiarity. This, of course, could be a different matter on an industrial or college campus where trained individuals are likely to be very familiar with the operation and use of the system. In that case, more selection switches could be beneficial.

24.5.2.4 If there are multiple control locations, only one shall be in control at any given time.

24.5.2.5* Any ACU shall provide a control status of all interconnected LOCs.

A.24.5.2.5 It is recognized that there can be benefit for users at the ACU to identify which specific location is currently in control. This can be indicated through visual means or through an audible location code. This can be especially useful for emergency responders utilizing the ACU to know which remote location is in control. If incorporated into a system,

such features can be enabled or disabled by authorized personnel or as directed through the risk analysis.

In most scenarios, there will be a primary and backup ECC. Since staffing both centers during an incident may be part of the emergency response plan, it is important to be able to identify which autonomous control unit (ACU) is in control and when control needs to be transferred.

24.5.2.6 If there are multiple control locations, a visual indication shall be provided at all other control locations indicating that another control location is in use.

It is necessary to know whether another location has been activated to avoid two locations attempting to transmit messages that may conflict or be confusing to the listeners.

24.5.2.7 Manual controls shall be arranged to provide visual indication of the on/off status for their associated notification zone.

24.5.2.8 If live voice instructions are provided, they shall perform as follows:

(1) Override previously initiated signals to the selected notification zone(s).
(2) Have priority over any subsequent automatically initiated signals to the selected zone(s).

24.5.2.9 A manual means shall be provided at each mass notification system control location to permit the mass notification system to relinquish control of the fire alarm system.

The purpose of this requirement is to prevent an intruder or terrorist who may be inside the building to actuate the fire alarm system and disable the MNS.

24.5.2.10* During the period after the mass notification system has seized control of the audible and visual notification appliances, but before the mass notification system relinquishes control, the mass notification system shall activate the audible and visual notification appliances at least once every 30 seconds.

A.24.5.2.10 During emergencies, building occupants should periodically receive an audible clue that the emergency notification given by the mass notification system is still in effect. This also can help building occupants and emergency response personnel recognize that the mass notification system is overriding fire alarm notification appliances. The audible signal could consist of a simple signal such as a chirp of sufficient duration to be recognized by the usual building occupants and, typically, by occupants who are not hearing disabled.

During an emergency, constant reassurance that the incident is still active or under investigation is important, especially when occupants are directed to defend-in-place and not evacuate the building. Thirty seconds is the maximum time to indicate that those in charge are still in control and investigating or handling the incident.

24.5.3 Notification Coverage.

24.5.3.1* The mass notification system shall provide for live voice and prerecorded localized messaging within a protected individual building, areas surrounding the building, and other outdoor designated areas.

A.24.5.3.1 The mass notification system could permit activation of messages originated by mobile sentries and roving patrols using wireless activation devices.

24.5.3.2 System design shall incorporate designation of acoustically distinguishable spaces (ADS) within any occupiable areas as required in Chapter 18.

System Design Tip

Acoustically distinguishable spaces (ADS), defined in 3.3.6, help the designer account for all spaces in a building where the message could be received to determine audibility and intelligibility.

24.5.3.3 Notification zones shall be established on the basis of a risk analysis.

24.5.3.4* If the mass notification system serves more than one building, it shall be capable of providing separate messages to one individual building or to multiple buildings at any given time.

A.24.5.3.4 Generally, each separate building should be provided with a separate in-building mass notification system; however, some facilities (such as a campus-type high school with multiple separate buildings) might be more effectively served by a single in-building mass notification system. Alternately, a risk analysis could determine that a wide-area mass notification system provides the optimal capability for mass notification.

24.5.4 Loudspeaker Circuits.

24.5.4.1* Loudspeaker circuits used for mass notification that are not fire alarm circuits shall be exempt from the monitoring requirements of this Code, provided that alternate methods of achieving comparable reliability are accepted by the authority having jurisdiction.

A.24.5.4.1 Alternate methods that achieve the desired statistical availability could be deemed acceptable in lieu of monitoring the integrity of circuits, signaling channels, or communication pathways where consistent with the risk analysis and emergency response plan.

An example of an alternate method could include an attendant monitored system, which is a device or system intended to be constantly operated and maintained by competent and experienced personnel either locally or from a remote station. ANSI/NEMA SB-40, *Communications Systems for Life Safety in Schools*, references "operational integrity" in relation to systems that are used regularly for routine purposes and suggests that such systems would be statistically more available due to a lower risk of falling into a state of disrepair. ANSI/NEMA SB-40 also addresses system readiness in relation to constant use, and recommends that, to the greatest extent possible, equipment used in emergency communication should be used daily in routine situations. Therefore, it is important to consider the level to which a system is constantly operated and the level of operator training when preparing a risk analysis. Based on the occupancy of the premise, the risk analysis, and the emergency response plan, the designer and authority having jurisdiction can more easily determine whether it is appropriate for loudspeaker circuits to utilize alternate methods for equivalency. Such a constantly operated system could be determined to achieve a statistically significant availability to satisfy an authority having jurisdiction.

Even though the Annex text of A.24.5.4.1 sounds like a requirement (Annex material does not contain requirements), it is simply saying to be aware of the issues surrounding the building and communications systems use. The risk analysis must be used to determine the importance of whether to require electrical supervision or not. The key goal with any ECS is to maintain operational reliability and the availability of the ECS before, during, and after the emergency.

24.5.4.2 Survivability for loudspeaker circuits used for mass notification shall be determined by the risk analysis for the building.

24.5.5 Impairments. The requirements of Section 10.21 shall be applicable when a mass notification system is impaired.

FAQ How should an MNS impairment be handled?

The impairment of an MNS should be treated with the same importance as impairments to a fire alarm system. Both systems affect life safety. See 14.2.2.2 for information on impairments/deficiencies.

24.5.6 Inspection, Testing, and Maintenance Requirements. Mass notification systems shall be inspected, tested, and maintained in accordance with the manufacturer's published instructions and the inspection, testing, and maintenance requirements of Chapter 14.

24.5.7* System Response Priorities. Priority levels shall be established on the basis of the risk analysis.

A.24.5.7 The risk analysis should identify what emergency situations will take priority over the fire alarm evacuation signal. Should a tornado warning for the area take priority over an active fire in the building? Should a breach of security at the campus entry gate take priority over an active fire in the building? If a manual fire alarm pull box has been actuated, it might be a terrorist action to have people leave the building and walk into an exterior threat. In such a case, mass notification input is intended to override the fire alarm evacuation signals to redirect the occupants based on the conditions.

The risk analysis is required to be approved by the authority having jurisdiction, who also will require approval of any message determined in the analysis to be a higher priority than the fire alarm signal.

24.5.8 Initiation Indication. The source of system activation shall be visibly and audibly indicated at the emergency command center and at the building control unit, unless otherwise required by the emergency response plan.

24.5.9 Initiating Devices.

24.5.9.1 Devices connected to a mass notification system for the purpose of initiating an automatic response to an emergency shall be evaluated based on the emergency response plan.

24.5.9.2* All mass notification initiating devices shall be listed for their intended purpose.

A.24.5.9.2 Devices such as gas or chemical sensors and detectors, weather alert signals, or other such signals can be desirable to connect to the mass notification system to provide a faster response to emergency conditions.

24.5.9.3 Where no listed device exists for the detection required by the emergency response plan, non listed devices shall be permitted to be used if their failure will not impair the operation of the mass notification system.

24.5.9.4 Non-fire emergency manual actuating stations (boxes) shall be listed to ANSI/UL 2017, *Standard for General-Purpose Signaling Devices and Systems*.

24.5.9.5 Non-fire emergency manual actuating boxes shall have tactile markings, be of a contrasting color to manual fire alarm boxes on the protected premises, and not be red.

24.5.9.6 Non-fire emergency manual actuating boxes shall be installed similarly to manual fire alarm boxes in accordance with the requirements of 17.15.4, 17.15.6, and 17.15.9.2.

24.5.10* Secure Access of Fire Alarm/Mass Notification System Interface. Access to, and physical protection of, the fire alarm/mass notification system interface shall be determined by the risk analysis and as defined in the emergency response plan.

A.24.5.10 Refer to 24.5.2 for requirements related to operation of the system by authorized personnel. It is recognized that, based on the risk analysis, control equipment and circuits could need different levels of protection for different facilities. Access to the fire alarm/mass notification interface should be consistent with the action outlined in the emergency response plan. It could have been prior practice in some jurisdictions to locate the fire alarm control unit in the main lobby of a facility. However, it might not be appropriate to locate the mass notification system autonomous control unit within the lobby if the general public would have access to deactivate mass notification system components. Based on the risk analysis, it could be appropriate to locate the autonomous control unit within a secured room while providing local operating consoles for use by other authorized personnel.

24.5.11 Autonomous Control Unit (ACU).

24.5.11.1 Where provided, the building ACU shall monitor and control the notification appliance network.

24.5.11.2 Building occupants meeting the requirements of 24.5.2.1 shall be permitted to initiate communications from the ACU.

24.5.11.3 Unless otherwise identified in the emergency response plan, actions taken at the building ACU shall take precedence over actions taken at any remote location, including the LOC, or inputs from a wide-area mass notification system.

Authorized personnel at the building will have the best and most up-to-date information about developing conditions there and will be expected to provide current and accurate information through the MNS.

24.5.11.4 When there are multiple ACUs controlling the same notification appliance network, only one shall be in control at any given time.

24.5.11.5 When the ACU is integrated with the building fire alarm control unit to form one combined system that performs both functions, the system shall meet the standby power requirements of this chapter.

24.5.11.6 When a combined system is installed with an ACU and fire alarm control unit and placed in separate equipment enclosures, the ACU and fire alarm control unit shall be interfaced as required by this chapter.

24.5.11.7 When the ACU is part of a stand-alone mass notification system and no fire alarm system exists, the ACU shall meet the requirements of this chapter.

24.5.12 Local Operating Console (LOC).

24.5.12.1* Building occupants meeting the authorized personnel requirement of 24.5.2.1 shall be permitted to initiate communications from the LOC.

Exhibit 24.6 depicts a local operating console (LOC).

A.24.5.12.1 Mass notification systems can include a system local operating console(s) for authorized occupants to readily access and originate messages in emergency and non-emergency situations. The quantity and location(s) of an LOC(s) should be determined by the risk analysis and the facilities emergency response plan.

24.5.12.2 The use of lock wire seals or break-glass-type enclosures to house the operating consoles for the system, or equivalent protection against unauthorized use, shall be permitted.

24.5.12.3 Operating controls shall be clearly identified.

EXHIBIT 24.6

Local Operating Console (LOC). (Source: Eaton, Long Branch, NJ)

24.5.12.4 If there are multiple control locations, only one shall be in control at any given time.

24.5.12.5 The location having control of the system shall be identified by a visual indication at that location.

24.5.12.6 If live voice instructions are provided, they shall override previously initiated signals to the selected notification zone(s) and shall have priority over any subsequent automatically initiated signals to the selected zone(s).

24.5.12.7 Upon initiation of an emergency message, a visual indication shall be provided to the user that the LOC is connected to the audio network.

24.5.12.8 Manual controls shall be permitted to provide visual indication of the on/off status for their associated notification zone.

24.5.12.9 The emergency message shall be an all-call basis unless otherwise permitted by 24.5.12.10.

24.5.12.10 Selective notification zone paging shall be permitted only if the LOC has manual controls with visual indication of the on/off status for each associated notification zone.

24.5.13 Voice Message Priority.

24.5.13.1* The priority of mass notification messages shall be established using the emergency response plan.

A.24.5.13.1 The following is an example scheme for message prioritization, from highest (1) to lowest (5), for consideration during the risk analysis:

(1) Live voice messages from personnel in the building should be the highest priority. If systems provide control locations that are usable by nonauthorized personnel, these controls should be disabled or overridden during emergency operations.

(2) Automatic fire alarm messages/other high priority messages as determined by risk analysis criteria.
(3) External messages originated by a wide-area mass notification system.
(4) Message priority for emergency conditions such as severe weather warnings, gas leaks, chemical spills, and other hazardous conditions should be determined by risk analysis criteria and defined in the emergency response plan.
(5) Non-emergency messages, such as general announcements and time function signaling (work breaks, class change, etc.), should have the lowest priority.

24.5.13.2 The local building mass notification system shall have the ability to override the fire alarm system with live voice or manual activation of a higher priority message, but only where that message and operation are approved under the emergency response plan.

24.5.13.3 All other messages shall also be prioritized by using the emergency response plan.

24.5.13.4 When identified by the emergency response plan, messages from the mass notification system shall be permitted to take priority over fire alarm messages and signals.

After it is determined which signals and messages will take precedence in the MNS based on the risk analysis, and the stakeholders agree that the incident in question should be a higher priority, the established priorities are then followed in the emergency response plan. The balance of the requirements in 24.5.13 provide specific guidance when determining that an MNS message may be a higher priority than a fire alarm signal. The authority having jurisdiction is one of the stakeholders who should be involved in this voice message priority decision making.

24.5.13.5 If the fire alarm system is in the alarm mode and a recorded voice message is playing, or the audible signals are sounding, and then the mass notification system is activated, it shall cause deactivation of all fire alarm–initiated audible and visual notification.

24.5.13.6 After the mass notification system relinquishes control, the following shall occur:

(1) Without an active fire alarm signal, the fire alarm system shall automatically restore to normal operation.
(2)* With an active fire alarm signal, the fire alarm system shall operate based on the emergency response plan.

A.24.5.13.6(2) Unless the risk analysis determines otherwise, the fire alarm system should always be automatically returned to normal functionality. If the fire alarm system is automatically returned to normal functionality, the building emergency response plan should state that no user intervention is required. When manual intervention is required to return the fire alarm system to normal, specific instructions should be in place in the emergency response plan explaining how the fire alarm system notification appliances should be reactivated. These instructions should be located at the fire alarm and mass notification control units. Individuals responsible for manually returning the fire alarm system to normal should be properly trained in the procedure.

24.5.13.7 Overriding of fire alarm audible and visual notification signals shall cause an audible and distinctive visual indication at each affected fire alarm control unit to indicate the MNS is active.

24.5.13.8 The fire alarm signal deactivation function shall be permitted to occur only when both the fire alarm system is in an alarm condition and notification is being given by the mass notification system.

24.5.13.9 When the fire alarm notification is overridden as permitted in 24.5.13.8, all other features of the fire alarm system shall remain unaffected.

24.5.14* Mounting of LOC Controls.

Subsection 24.5.14 addresses mounting requirements for LOC controls.

A.24.5.14 Control functions need to be accessible for those intended to use them. This requirement is not intended to require that the control enclosure be within the dimensions, but rather the respective buttons, latches, microphone, and other items the user will need to have within reach and view. Figure A.24.5.14(a) applies when the horizontal reach is less than 10 in. (254 mm). Figure A.24.5.14(b) applies when the horizontal reach is between 10 in. (254 mm) and 24 in. (610 mm).

24.5.14.1 Controls that are intended to be accessed by authorized users shall be mounted in accordance with 24.5.14.

24.5.14.2 LOC controls, including switches, microphone, latches, and so forth, shall be located above the finished floor a minimum of 36 in. (910 mm) and a maximum of 48 in. (1.22 m) where the horizontal reach is less than 10 in. (254 mm).

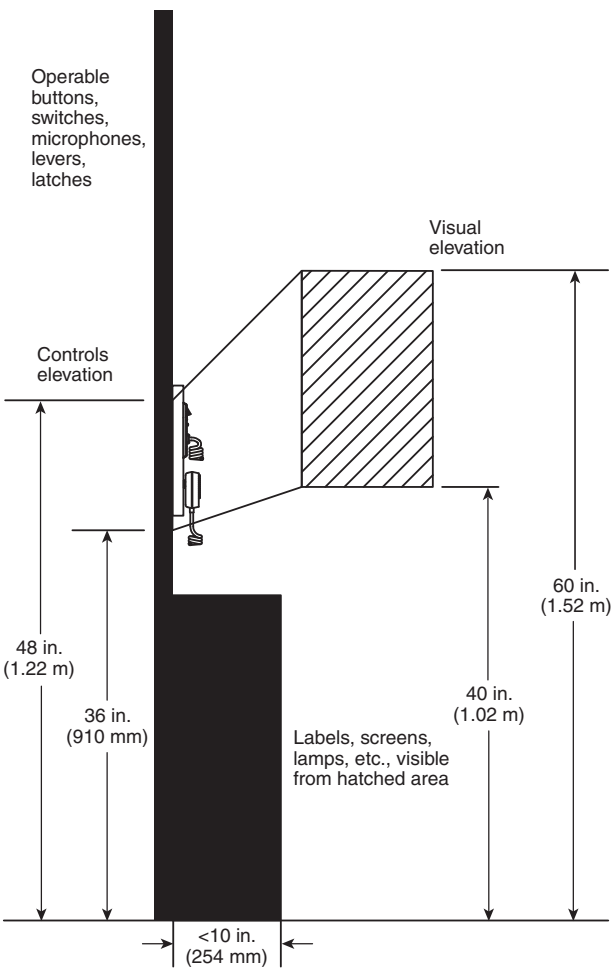

Δ ***FIGURE A.24.5.14(a)*** *Horizontal Reach of Less Than 10 in. (254 mm).*

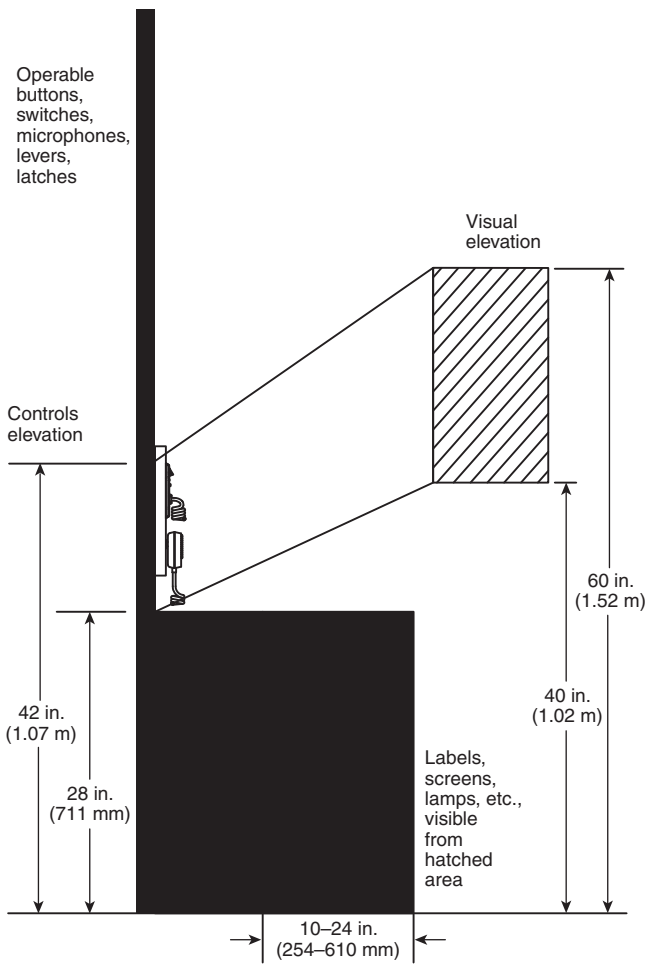

Δ ***FIGURE A.24.5.14(b)*** *Horizontal Reach of 10 in. (254 mm) to 24 in. (610 mm).*

24.5.14.3 If a horizontal reach of 10 in. (254 mm) to 24 in. (610 mm) is required, the maximum elevation shall be limited to 42 in. (1.07 m) above the finished floor and the minimum elevation shall be limited to 28 in. (711 mm).

24.5.14.4 Text and visual indicators, including lamps, screens, displays, instructions, or labels, associated with control or operation shall be visible within all points of elevation between 40 in. (1.02 m) and 60 in. (1.52 m) above the finished floor.

24.5.14.5 Where controls and information are provided in accordance with 24.5.14.2 through 24.5.14.4, provision of additional or redundant controls shall be permitted within the same vicinity at an elevation or reach other than those indicated.

24.5.14.6 Dimensions other than those identified in 24.5.14.2 through 24.5.14.4 shall be permitted when documented within the emergency response plan that ADA guidelines are not applicable, or when otherwise required by the AHJ.

24.5.15 Volume Control.

24.5.15.1 Local controls shall be permitted to adjust volume levels of ancillary functions.

24.5.15.2 Upon activation of an emergency signal, the system shall override any local volume setting to deliver at a preset volume setting that has been established through testing and acceptance of sound level and speech intelligibility as required by this Code.

FAQ

Can a loudspeaker be provided with a control that allows occupants to lower the volume?

Loudspeaker systems are available that incorporate volume controls and components that allow occupants to lower or turn off the loudspeakers in their area or office. These systems are also designed to allow the loudspeakers to operate at their required power output when the fire alarm system is actuated. The volume control depicted in Exhibit 24.7 would be overridden by the fire alarm system actuation.

System Design Tip

EXHIBIT 24.7

Loudspeaker Volume Control. (Source: Atlas Sound, Ennis, TX)

24.5.16 Visual Notification.

The use of visual notification appliances in an MNS do not provide enough information for the hearing impaired to take appropriate action. Textual graphic or video displays can be used to serve this purpose. A visual notification appliance commands attention, but a textual visual notification appliance can provide more specific information. See the commentary following 24.5.18.2.

24.5.16.1 Where audible notification is provided, mass notification systems shall also provide visual notification information to serve the hearing impaired and for high-noise areas.

24.5.16.2 The visual notification required by 24.5.16.1 shall be accomplished using visual notification appliances.

24.5.16.3 In addition to the visual notification appliances required by 24.5.16.1, textual, graphic, or video displays shall be permitted.

24.5.16.4 Transmission of visual notification and messages shall be simultaneous to audible notification and messages.

24.5.17 Visual Appliances.

Δ **24.5.17.1** Where visual notification appliances are used, they shall meet the requirements of 24.5.17.2 through 24.5.17.10.

24.5.17.2 Visual notification appliances shall be of a sufficient quantity and intensity and located so as to meet the intent of the design and be in compliance with Section 18.5.

24.5.17.3 Visual notification appliances used in combination systems where the same visual notification appliance is used for both mass notification and fire notification shall comply with the following:

(1) Be clear or nominal white, meeting the listing requirements of ANSI/UL 1971, *Standard for Signaling Devices for the Hearing Impaired*
(2) Have no marking or be marked with the word "ALERT" stamped or imprinted on the appliance
(3) Be visible to the public

The color of the visual notification appliance refers to the lens color and not the housing. Exhibit 24.8 shows a visual notification appliance with an amber lens labeled "ALERT." However, the application of amber visual notification appliances may conflict with other visual-alerting appliances in some settings. When a conflict arises, an analysis should be conducted, and a review of the options, with technical justification, should be made with the authority having jurisdiction.

Combination visual notification appliances, one for fire and one for MNS, can be either integrated as shown in Exhibit 24.9 or installed next to each other in compliance with the installation requirements of Chapter 18. Also refer to 18.3.3.2 and 18.3.3.3 regarding notification appliances for other than fire alarm use.

EXHIBIT 24.8

Visual Notification Appliance with Amber Lens. (Source: Johnson Controls, Westminster, MA)

24.5.17.4 In situations where existing notification appliances previously used exclusively for fire alarm applications, and are marked with the word "FIRE," and are to be used for other emergency notification purposes, field modification to the marking shall be permitted, provided that it is accomplished by one of the following methods:

(1) Replacement of the manufacturer's approved escutcheon or trim plate
(2) Covering of, or removal of, the word "FIRE" using a manufacturer's approved method
(3) Installation of a permanent sign directly adjacent or below the notification appliance indicating that it is multipurpose and will operate for fire and other emergency conditions

24.5.17.5 Visual notification appliances with colored lenses shall be marked with the listed effective intensity using the lens color installed.

24.5.17.6 The spacing of colored visual notification appliances shall be in accordance with public mode spacing requirements of Section 18.5 using the effective intensity as the basis for spacing.

24.5.17.7 Where visual notification appliances are used solely for mass notification, the word "ALERT" shall be stamped or imprinted on the appliance and be visible to the public.

Δ **24.5.17.8** Where colored visual notification appliances are used solely for mass notification, they shall be listed to an applicable standard such as ANSI/UL 1638, *Visible Signaling Devices for Fire Alarm and Signaling Systems, Including Accessories*.

24.5.17.9 Visual notification appliances with nominal white light output that are listed to ANSI/UL 1971, *Standard for Signaling Devices for the Hearing Impaired*, and visual notification appliances with other than nominal white light output that are listed to ANSI/UL 1638, *Visible Signaling Devices for Fire Alarm and Signaling Systems, Including Accessories*, shall be considered as meeting the intent of this Code.

24.5.17.10 Visual notification appliances used for mass notification shall meet the synchronization requirements of Section 18.5.

EXHIBIT 24.9

Combination Fire/Alert Visual Notification Appliance. (Source: Johnson Controls, Westminster, MA)

24.5.18* Textual and Graphical Visual Appliances.

In buildings where text, graphic, and video displays are used for mass notification, occupants can expect these displays to provide useful information to prompt them to act quickly and intelligently. A textual visual appliance is depicted in Exhibit 24.10.

A.24.5.18 Care in location and placement is critical to the survivability of the textual visual appliance and maximizing its effectiveness. Locate the textual visual appliance away from direct sunlight or direct local area lighting. Avoid locating the textual visual appliance near heating and air-conditioning ducts.

24.5.18.1 Textual and graphical visual notification appliances shall be permitted to be used for primary or supplemental notification.

24.5.18.2* Textual and graphical visual notification shall be considered to be primary notification where it is the only method used to convey emergency mass notification information to the general public or to specific individuals.

System Design Tip

Textual visual appliances should provide accurate and actionable crisis communications information. Many owners and designers opt for a mix of both visual appliances and textual visual appliances as part of a comprehensive mass notification strategy. For example, using visual appliances with signage instructing occupants who are deaf or hard of hearing to move to a location where textual visual appliances have been installed could be a viable strategy for mass notification.

A.24.5.18.2 The requirement of 24.5.18.2 does not imply that multiple primary methods of visual appliances cannot exist in a common area. Both visual notification appliance and graphical or textual appliances are designated as primary where the authority having jurisdiction declares both to be required. When textual audible notification is required, consideration is warranted for high-noise areas and for a person who is deaf or hard of hearing being capable of clearly receiving instructions.

As mass notification systems are deployed, the more complex emergency management communication requirements that go beyond what can be indicated by a visual notification appliance and a tone are being addressed. The intelligibility requirements of an MNS/ECS are a direct reflection of this reality. However, for a person who is deaf or hard of hearing, no degree of intelligibility might be sufficient. Additionally, there are physical spaces where intelligibility is impossible or impractical to provide. In designating a primary visual notification appliance, it is easy to assume that a visual notification appliance is sufficient and all other visual notification is automatically supplemental.

EXHIBIT 24.10

Textual Visual Appliance Directing Evacuation via North Stairs. (Source: Johnson Controls, Westminster, MA)

However, where the risk analysis and an emergency response plan require the communication of MNS textual audible instructions for occupants, a visual notification appliance should not be considered a sufficient primary notification appliance where intelligibility cannot be achieved or where consideration for lone individuals or groups of individuals who are deaf or hard of hearing might prevent them from responding appropriately to emergency instructions.

24.5.18.3 Primary and supplemental textual and graphical visual appliances shall meet the requirements of Chapter 18.

24.5.18.4 Primary textual and graphical visual appliances other than a main control unit shall be permitted to not have a dedicated primary power circuit as required by Chapter 10 but shall meet all other requirements for the monitoring of primary power and all requirements for secondary power.

This paragraph affirms that although the reliability of power is required, it is not necessary to provide a dedicated circuit.

24.5.18.5 Textual and graphical visual appliances shall be permitted to be used for nonemergency purposes.

24.5.18.6 Emergency textual and graphical messages shall override nonemergency textual and graphical messages.

24.5.18.7 Supplemental textual and graphical visual appliances that are not monitored for integrity or loss of communication by a control unit shall be provided with visual status indicators, including loss of communication or loss of power, that are clearly visible on the appliance.

24.5.18.8 Addressable primary textual and graphical visual appliances using signaling line circuits shall meet the performance requirements of Section 23.6.

24.5.18.9 Non-addressable primary textual and graphical visual appliance circuits shall meet the performance requirements of Section 23.7.

24.5.19 Tactile Notification Appliances. Where tactile notification appliances are provided for emergency notification, they shall meet the requirements of Section 18.10.

24.5.20* Video Alerting. Video display systems that provide alerts and messages to video appliances shall be permitted to be used to supplement mass notification.

Video information displays (VIDs) at an airport describing flight arrival and departure schedules can be used to supplement other visual and textual visual appliances. The screen could provide information during an emergency as shown in Exhibit 24.11.

A.24.5.20 The video display can be a video appliance used to facilitate mass notification. Information displayed could be video, graphic, text, or audio. Information can be transmitted over a video distribution network, MATV, or CATV system. These messages can be standardized or customized for specific applications or situations. Dynamic text elements can be derived from secure data or updated in real time, either locally or remotely. Messages can be controlled by authorities to update and alter content with manual overrides from authorized security, police, and so forth to ensure up-to-date and real-time information. The same can be accomplished with remote control from an emergency command center. Examples of interfaces used for real-time control include USB, Ethernet, RS-232, and GPI.

EXHIBIT 24.11

Video Information Display (VID).

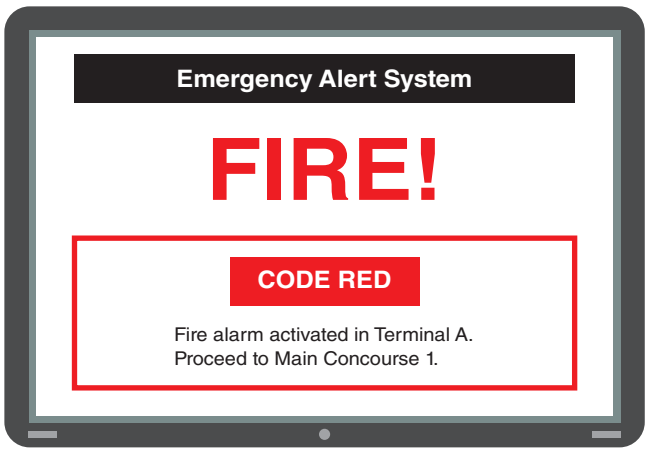

24.5.21 Supplemental Notification. Supplemental notification shall be permitted to provide additional information or more detailed instructions than those transmitted by the primary notification means.

24.5.22 Interfaces. Any abnormal condition that would prevent reliable emergency operation of any interfaced system shall be annunciated both audibly and visibly as a trouble signal at the affected control location.

24.5.22.1 Fire Alarm Control Interface (FACI).

24.5.22.1.1 Where a fire alarm system is installed covering all or part of the same building or other area as the mass notification system, an interface shall be provided between the systems for operational coordination purposes.

24.5.22.1.2 A listed barrier gateway in accordance with 10.3.1, integral with, or attached to, each control unit or group of control units, as appropriate, shall be provided to prevent the other systems from interfering with or controlling the fire alarm system.

24.5.22.1.3* The fire alarm control interface shall coordinate signals to and from each system to accomplish the following:

(1) Indicate the failure at the system control unit that will be impaired
(2) Provide an audible and distinctive visual indication at the affected FACU(s) to indicate the MNS is active.
(3) Cause the fire alarm system to deactivate all audible and visual notification appliances whose operation could interfere with the intelligibility of the mass notification message or that will deliver conflicting information to occupants
(4) Not permit the fire alarm system to turn off audible and visual notification appliances for special suppression pre-discharge notification required by 24.4.7.1
(5) Where required by the emergency response plan or by other governing laws, codes, or standards, or by other parts of this Code, or by the authority having jurisdiction, provide for a supervisory signal to a supervising station with a response as directed by the emergency response plan that is indicative of the mass notification system overriding the fire alarm system notification appliances during simultaneous fire and mass notification events

According to 24.5.22.1.3(5) and 24.4.7.4, the transmission of a supervisory signal to the supervising station indicating that the MNS has overridden the fire alarm system is not required by *NFPA 72®, National*

Fire Alarm and Signaling Code®. However, the emergency response plan may require that such a signal be sent to the supervising station. The supervising station must be made aware of this provision detailed in the emergency response plan.

A.24.5.22.1.3 Where automatic transmission is required to a supervising station, it should be performed in accordance with the emergency response plan. The purpose for disabling or overriding the fire alarm system notification appliances during simultaneous fire and mass notification events is so that occupants will not receive conflicting messages and fail to respond correctly. Fire alarm notification that should be overridden during a mass notification system activation could include audible notification appliances, visual notification appliances, textual notification appliances, and video notification appliances.

24.5.22.1.4 If the fire alarm control interface is used to broadcast nonemergency messages, music, or other signals over the fire alarm notification appliance circuits, the operation shall meet the requirements of 24.5.15 and 23.8.4.

System Design Tip

Broadcasting non-emergency messages, music, or other signals over the fire alarm notification appliance circuits might prompt occupants to attempt to disable the loudspeakers. Loudspeaker systems that allow occupants to lower or turn off the loudspeakers are permitted if the controls are designed so that the loudspeakers operate at their required power output when the fire alarm system is actuated.

24.5.22.2 Interfaces to Emergency Control Functions. The mass notification system shall be permitted to provide emergency control functions in accordance with Chapter 21 as required by the emergency response plan and as permitted by the authority having jurisdiction.

24.5.22.2.1 When mass notifications systems are controlling building life safety systems, the mass notifications systems equipment shall be listed for ANSI/UL 864, *Control Units and Accessories for Fire Alarm Systems*.

24.5.22.3 Interfaces with Wide-Area Mass Notification Systems.

24.5.22.3.1* Individual building mass notification systems shall be permitted to interface with wide-area mass notification systems.

A.24.5.22.3.1 As part of the risk analysis and emergency response plan, consideration should be given to future interfacing in-building mass notification systems with a wide-area mass notification system if it does not presently exist. In-building mass notification systems should be designed to allow future interface with a wide-area mass notification system.

24.5.22.3.2 The in-building mass notification system shall not be activated or controlled by a wide-area mass notification system, unless the wide-area mass notification system also meets the design and performance requirements of this chapter or has been deemed to be acceptable by the risk analysis and the authority having jurisdiction.

24.5.23 Combination Emergency Communications Systems.

24.5.23.1* When the mass notification system is integrated with the building fire alarm control unit to form one combined system that performs both functions, the system shall comply with this chapter.

Combining or integrating in-building fire EVACS with other communications systems — such as mass notification, PA, and paging systems — is permitted. The fire alarm or priority mass notification messages (determined by the risk analysis) must take precedence over any other announcement, such as paging from a telephone system or other PA system. In addition to reduced design, installation, and

ongoing life cycle costs, regular use of the system for normal paging functions provides an end-to-end test of the audible notification components and circuits. Occupants familiar with use of the system for normal paging are also more likely to be comfortable and proficient in use of the system during an emergency.

A.24.5.23.1 A combined system can include an autonomous control unit and fire alarm control unit supplied from different manufacturers or placed in separate equipment enclosures; however, the autonomous control unit and fire alarm control unit should be integrated in their controls and performance to meet the requirements of this Code.

24.5.23.2 All components that affect the operation of the fire alarm system shall be listed for fire alarm use and shall be in compliance with applicable standards such as ANSI/UL 864, *Standard for Control Units and Accessories for Fire Alarm Systems*.

24.5.24 Public Address (PA) Systems Used for Emergency Communications.

24.5.24.1 The voice communications or public address system that is to be used for mass notification shall be evaluated by the emergency communications system designer, as defined in Chapter 10, to determine applicability and compliance.

24.5.24.2* Evaluation documentation in accordance with 7.3.9 shall be provided by the emergency communications system designer attesting to the fact that the public address system has been evaluated and meets the needs of the emergency response plan and, where not compliant with the prescriptive requirements of Chapter 24, shall provide equivalent system performance requirements.

N **A.24.5.24.2** When a professional-grade public address system, an engineered sound reinforcement system, or a pro-audio sound system does not meet all the performance requirements of Chapter 24, it can still be evaluated and documented with a risk analysis and permitted for use as an emergency communications system with the approval of the authority having jurisdiction. For example, consider a professional-grade public address system that includes outdoor-class loudspeakers not listed for fire. In the risk analysis, an argument could be made that the system is allowable for use during a non-fire-related evacuation of the structure, a lock-down or lock-out condition, or a reverse evacuation.

Another example could be an attendant monitored system , which is a device or system intended to be constantly operated and maintained by competent and experienced personnel either locally or from a remote station. Consider a professional-grade public address system, an engineered sound reinforcement system, or a pro-audio sound system that has a history of reliability, is used regularly by trained personnel, but does not support the monitoring for integrity requirements of *NFPA 72*. When coupled with appropriate equivalency information provided within the risk analysis, such a system could be deemed acceptable to an authority having jurisdiction for specific occupancies and uses.

The risk analysis should also consider the need for secondary power. Typically, public address systems, engineered sound reinforcement systems, and pro-audio sound systems do not include integrated secondary power. So, if the application requires secondary power, it would usually need to be provided through an alternate means such as backup generator or an ESS. For an ESS in particular, care should be taken to determine the required capacity to support a minimally acceptable operational period. See Section 10.6, Power Supplies, which highlights concerns and issues such as continuity, capacity, and various options.

The Annex text provides guidance and considerations for the risk analysis. One should also consider a review of the operational reliability of the equipment and check to ensure that none of the professional sound equipment is obsolete. Spare parts availability should be checked also.

The owner should provide backup for all service and testing conducted on the system to date with the understanding that the Code will require inspection, testing, and maintenance, regardless of its listing.

The requirements of the Code for these systems are the same in terms of performance, and once approved by the authority having jurisdiction must meet the building's risk analysis and emergency response plan.

24.5.25 Public Address (PA) System Interface with Facility Fire Alarm System.

24.5.25.1 When a public address system is used to deliver mass notification messages, the public address system shall provide (either internally as a design feature or with an approved or listed external controller) for a signal to control the facility's fire alarm system for the purpose of deactivating the fire alarm audible and visual notification appliances in accordance with 24.5.22.1.

PA systems that are planned for mass notification use must be interfaced appropriately with the fire alarm system to cause deactivation of the fire alarm system notification appliances — assuming they are separate from the PA system loudspeakers. This deactivation will occur only when the risk analysis has determined under what circumstances the mass notification message should override the fire alarm signal and must be approved by the authority having jurisdiction.

24.5.25.2 All of the following features shall be provided in, or added to, the public address system:

(1) Emergency messages must have priority over non-emergency messages.
(2) All individual or zone loudspeaker volume controls must default to the emergency sound level when used for an emergency mass notification message.
(3) When monitoring of circuit integrity is provided by the public address system, monitoring must continue, even if local loudspeaker volume controls are placed in the "off" position.
(4) The required visual notification appliance network (i.e., visual notification appliances and textual signs) must be provided where required.

24.6* Wide-Area Mass Notification Systems.

A.24.6 Wide-area mass notification systems are generally installed to provide real-time information to outdoor areas. These systems are normally provided with, and operated from, two or more emergency command centers. Communications between emergency command centers and in-building mass notification systems is provided. Communications between the emergency command centers and regional or national command systems could also be provided. Wide-area mass notification systems are often those such as campus giant voice systems, military base public address systems, civil defense warning systems, large outdoor visual displays, and so forth.

24.6.1 Voice Messages.

24.6.1.1 Voice messages shall comply with the requirements of 24.3.1.

24.6.1.2 Where required by the emergency response plan, multiple languages shall be permitted to be used.

24.6.1.3 Where required by the emergency response plan, specific warning tones shall be provided.

24.6.2* Password Protection. Wide-area mass notification systems shall have multiple levels of password protection access control, including levels for system administrators, system operators, maintainers, supervisors, and executives, or other means to limit access to system controls shall be provided based on the emergency response plan.

A.24.6.2 A commonly used method of protecting against unauthorized changes using multiple levels of password protection can be described as follows (in ascending levels of access):

(1) *Access Level 1*. Access by persons who have a general responsibility for safety supervision, and who might be expected to investigate and initially respond to an alarm or trouble signal.
(2) *Access Level 2*. Access by persons who have a specific responsibility for safety, and who are trained to operate the control unit.
(3) *Access Level 3*. Access by persons who are trained and authorized to take control over a given area of a site to allow local paging, which might be different from that of another area. Note: This might require a higher form of access to the local control.
(4) *Access Level 4*. Access by persons that serve in a system administrator capacity and are authorized to make changes to the system and its associated software.

24.6.3* External Connections. Wide-area mass notification systems shall be permitted to connect to regional mass notification systems and public emergency alarm reporting systems as defined in this Code, and public reporting systems as defined in NFPA 1221.

A.24.6.3 A wide-area mass notification system could have the capability to communicate with other notification systems on the site, such as the telephone alerting system, paging system, cell phone, pager, PDA activation, e-Blast, message scrolling, reverse 911, fax transmission, and highway advisory radio and sign control system (used for dynamic control of radio information and traffic signs for emergency information and traffic management).

Exhibit 24.12 is an example of a message display that might be used as part of a wide-area MNS that communicates with other notification systems.

EXHIBIT 24.12

Wall-Mounted Message Display with Integral LEDs and Sounder. (Source: Alertus Technologies, LLC, Beltsville, MD)

24.6.4 Emergency Command Center. Refer to Section 24.11 for requirements of an emergency command center.

24.6.5* High Power Loudspeaker Array (HPLA). When required by the risk analysis, high power loudspeaker arrays (HPLAs) shall be provided, installed, and maintained.

A.24.6.5 High power loudspeaker arrays should be designed with directional characteristics that will minimize the distortion of voice signals by interface from other zones and will minimize the transmission of voice or tone signals into environmentally sensitive areas or off the site.

24.6.5.1 The HPLA shall be arranged in such a manner to provide intelligible voice and audible tone communications.

(A) When multiple HPLAs are used, they shall be arranged in physical or virtual notification zones so that each notification zone can be individually controlled by the emergency command center.

(B)* HPLAs shall be designed to maintain the intelligibility of voice signals within the notification zone in accordance with the requirements of Chapter 18.

A.24.6.5.1(B) Refer to Annex D for more information on speech intelligibility and how it is predicted.

Normal weather conditions should be specified as appropriate for the geographic location.

In outdoor areas, such as in industrial areas with many multi-story buildings, the maximum distance of personnel from an outdoor loudspeaker often has to be significantly reduced to retain acceptable intelligibility of the voice message. Loudspeakers that provide directional capability should be used. These can be mounted on building exteriors if the loudspeakers do not radiate unacceptable levels of sound into the building on which they are mounted.

At some sites, it could be necessary to control the amount of sound that propagates in undesirable directions, such as into civilian communities adjacent to the site boundaries or into wildlife areas with protected or endangered animal species. Additionally, in some areas, it might be necessary to mount wide-area mass notification loudspeakers on the side of a building while simultaneously preventing an unacceptable increase in that building's interior noise levels.

24.6.5.2 Secondary power for HPLAs used for wide-area mass notification systems shall have sufficient capacity to operate the unit for a minimum of 3 days in standby, followed by 60 minutes of operation at full load.

24.6.5.3 An HPLA shall have the capability to provide voice communications and tones as determined by the emergency response plan.

24.6.5.4* An HPLA shall operate in the environment in which it is located, considering such factors as temperature, humidity, wind, dust, vibration, and other environmental factors.

A.24.6.5.4 At a minimum, the high power loudspeaker array controller should be located above known high water level during historic floods. In northern states, the high power loudspeaker array should be located above known snow levels. When selecting high power loudspeaker arrays, care should be taken to ensure the equipment is rated to operate between the high and low temperature range and other anticipated environmental conditions for the geographical location of installation. The system designer should inquire about this information as part of the risk analysis.

24.6.6 High Power Loudspeaker Array Enclosures.

24.6.6.1 Enclosures for HPLAs shall be of the NEMA 4 or 4X type.

24.6.6.2 HPLA enclosures shall have intrusion detection that signals the emergency command center.

(A) The signal shall be initiated whenever the door of the enclosure is in the open position.
(B) The transmitted signal shall be a latching supervisory signal.

24.6.7 High Power Loudspeaker Array Mounting.

Exhibit 24.13 shows examples of high power loudspeaker arrays.

24.6.7.1 HPLAs shall be mounted at a minimum mounting height that is based on the rated output of the array.

24.6.7.2* HPLAs shall be installed at a height and orientation to prevent hearing damage to anyone in the immediate vicinity of the appliances.

A.24.6.7.2 High power loudspeaker arrays should be mounted not to exceed the OSHA and FEMA Publication CPG-17, *Outdoor Warning Systems Guide,* for occupational noise exposure limits or an absolute limit of 123 C-weighted decibels (dBC) as referenced in FEMA to anyone in the immediate vicinity of the appliances.

24.6.7.3 All external conductors (conductors passing outside of the HPLA equipment cabinet) shall be provided with surge suppression to minimize potential equipment damage from lightning strikes.

24.6.8 High Power Loudspeaker Array Noise Consideration. HPLA notification zones shall not be used to provide mass notification inside any structures.

24.6.9* High Power Loudspeaker Array Structural Loads, Wind, and Seismic Design. HPLAs and their supporting structures shall meet the structural, wind, and seismic loads as identified in the risk analysis.

A.24.6.9 High power loudspeaker arrays and their supporting structures should have a minimum design wind speed of 100 miles/hr [161 km/hr (86.8 kn)]. The supporting structure

EXHIBIT 24.13

High Power Loudspeaker Arrays. (Source: Ultra Electronics-USSI HyperSpike®, Columbia City, IN)

should be sized to accommodate the static and dynamic loads produced by the sound systems and all attachments. Seismic loads are generally site specific.

24.6.10 Textual Visual Appliances. Textual visual appliances shall meet the requirements of Section 18.9 and 24.5.18.

24.6.10.1 After loss of primary power, primary textual visual notification appliances shall have sufficient secondary power to operate for a minimum of 2 hours of continuous display time during an emergency event.

24.6.10.2 Scrolling message boards shall be provided with means to control the scrolling rate.

24.6.11 Interfaces with Wide-Area Mass Notification Systems. Interfaces between wide-area mass notification systems and in-building mass notification systems, other alert and notification systems, regional mass notification systems, and off-site interfaces shall have a standard interface method (such as an audio line–level output and multiple relay contacts) or supply the necessary communications protocols to provide interoperability and a secure communications link.

24.6.11.1 The interface shall be such that the primary function of both systems shall not be compromised.

24.6.11.2 The interface shall be monitored for integrity in accordance with 10.6.9, Section 10.19, and Section 12.6, so that an abnormal condition that could prevent reliable system operation is audibly and visibly annunciated as a trouble signal at both systems' control units.

24.6.12 Control Hierarchy. There shall be a predefined control hierarchy between the wide-area mass notification system, the in-building mass notification system, and the regional mass notification system for information flow from the remote control center, as well as information from specific locations.

This predefined control hierarchy should be developed through a review of the goals and objectives of the owner and the risk analysis approved by the authority having jurisdiction.

24.6.13 Communications Links.

24.6.13.1 The wide-area mass notification system, including communications links, shall minimize the potential for interference from jamming, spoofing, hacking, eavesdropping, or other malicious acts.

24.6.13.2 The wide-area mass notification system shall have a primary and redundant communications link with minimal functional and spatial interconnection with each other.

24.6.13.3 Wide-area and in-building mass notification systems equipment and interface methods connecting to or utilizing public emergency alarm reporting systems and associated communications infrastructure shall be electrically and operationally compatible so as not to interfere with the public emergency alarm reporting systems.

24.7* Distributed Recipient Mass Notification Systems (DRMNS).

Δ **A.24.7** Distributed recipient mass notification systems are enterprise-class systems for the management of, and mass distribution of, emergency notification messages within buildings, throughout installations, across entire geographical regions, or throughout a worldwide military command. Using distributed recipient mass notification systems, designated system operators would be able to rapidly and reliably inform appropriate personnel of homeland security

levels (including chemical, biological, radiological, and nuclear threats; hazardous weather conditions; and many other critical events), possibly with near real-time response capability.

A distributed recipient mass notification system is meant to communicate to a wide range of targeted individuals and groups. These systems might use mass dialing systems, including reverse 911, email, SMS, or other directed communications methods to broadcast information. They might also use wired or wireless networks for one- or two-way communications and/or control between a building or area and an emergency services organization (information, command, and control).

Although classified as one-way ECS, distributed recipient mass notification systems could be capable of centrally tracking, in real time, all alerting activities for each individual recipient, including sending, receiving, and responding to alerts, and be able to generate reports based on tracked information. Distributed recipient mass notification systems could be able to provide ability to collect and report user responses to alerts, such as "I am safe," "I need assistance," and "I am not in affected area."

The responses generated as described in the paragraph above do not make the DRMNS a two-way communications system because the response information is limited. If equipment for a DRMNS includes the ability of the receiver of the notification to text in real time to the central command area, then it is possible that the system could be reclassified from a performance point of view and accepted as such by the authority having jurisdiction.

Distributed recipient mass notification systems could incorporate a predefined library of signals and messaging appropriate for, but not limited to, the following:

(1) Presidential alert message
(2) Homeland security levels
(3) Terrorism threats, watches, or warnings
(4) Evacuation routes
(5) Emergency directives
(6) Personnel recall requirements
(7) Federal, DOD, police, fire, local, or installation-specific warning and notification requirements
(8) Amber alerts

The distributed recipient mass notification system could be capable of monitoring emergency notifications from multiple data sources [such as Wireless Emergency Alert (WEA), National Weather Service, Emergency Managers Weather Information Network (EMWIN), Naval Meteorology and Oceanography (METOC), and others as determined locally] and automatically sending out notifications to designated facilities and personnel based on predefined rules.

A mass notification system could also be capable of reaching out to all online personnel by leveraging a highly secure, redundant, Web-based IP network architecture to manage the entire mass notification process. Agencies and organizations can create role-based uses such as operators, administrators, and recipients, based on their access rights across multiple facilities, campuses, and installations. System rules could be established to determine operator permissions and actions such as creating and activating scenarios, as well as the extent and geography of alerts and delivery systems and devices that should be used. Such a Web-based mass notification system would employ an open, standards-based architecture. The system could be integrated with existing user directories to support organizational hierarchy and emergency response groups. It could be structured to allow emergency criteria–based targeting of emergency alerts.

Additionally, this annex material provides information on ongoing development of system requirements for net-centric alerting systems (NCAS) that will be based on IP

technologies. This annex is not mandatory, but is provided to stimulate development of suitable requirements and standards. Consequently, user suggestions and feedback on this annex are highly encouraged and requested. Methods to ensure reliability and robustness in off-normal or emergency conditions are of particular concern. The required amount of and method for isolating alerting functions from normal, non-alerting system functions needs development.

NCAS leverage the IP network infrastructure to instantly reach those personnel who have access to nearly any IP-connected devices [such as pop-up alerts on personal computers (PC), text messages to cellular telephones, electronic mail messages, and voice messages to voiceover-IP (VoIP) telephones and PCs]. Additionally, NCAS could be used to actuate, through a single user interface, other (IP based and non-IP based) alerting systems, such as wide-area alerting systems and traditional dial-up telephone alerting systems.

NCAS can be installed independently or at a central location. In a centrally managed NCAS configuration, personnel and facilities in the regional operations center's particular area of coverage could be alerted instantly by events, either from any individual installation, or centrally from the regional operations center. Using management tools, designated operators from each installation in the region could log in via a web browser and have complete access to their own portion of the NCAS. The regional operations center would retain the ability to centrally monitor and manage all portions of the system, including supervisory and trouble conditions of the different system components and integrated components.

The NCAS would incorporate a Web-based management and alert activation application through which all operators and administrators could gain access to the system's capabilities, based on the users' permissions and the defined access policy. Such a management application would incorporate management of the alert activation flow through all delivery methods, as well as end-user management, operators' permission and access, tracking and reporting, and all administrative aspects of the system.

Distributed recipient mass notification systems could interface and interoperate with other types of mass notification capabilities, including wide-area and in-building mass notification systems. During emergencies, systems operators should not need to send notifications using multiple alerting systems. The distributed recipient mass notification system, particularly NCAS, might be able to provide the capability to integrate user interfaces and consolidate access to multiple mass notification and alerting systems.

24.7.1* Overview. Distributed recipient mass notification system (DRMNS) alerting shall not be used in lieu of required audible and visual alerting mass notification systems but shall be integrated with mass notification systems whenever possible.

A.24.7.1 Distributed recipient mass notification systems could enable the management of the notification flow, including users' management, groups targeting, operators' permissions, access policies, predefined emergency scenarios, and response tracking and reporting.

24.7.2* Targeted Recipients. The DRMNS shall be capable of sending alert messages to target recipients.

A.24.7.2 Distributed recipient mass notification systems could be capable of sending alert messages in a prioritized method to target recipients according to the following:

(1) Hierarchical organizational structure (as would be imported from an active directory)
(2) Organizational roles
(3) Specific distribution lists [e.g., hazardous materials (HAZMAT) response teams]
(4) Specific distribution (e.g., person who is deaf or hard of hearing or others with disabilities that warrant prioritized notification)
(5) Dynamic groups created through on-the-fly queries of the user directory
(6) Geographical locations (e.g., entire bases, zones within bases)
(7) IP addresses (required for targeting devices in specific physical locations)

Distributed recipient mass notification systems should provide mechanisms to update user and targeting data (e.g., user data import, integration with personnel directories, and self-user registration).

Distributed recipient mass notification systems could use a Web-based user interface, support locally designated standard network ports and protocols, and provide open interfaces to support interoperability, such as eXtensible markup language (XML) and common alerting protocol (CAP) based emergency messages. (*See OASIS Standard CAP-V1.2, OASIS Common Alerting Protocol version 1.2.*)

24.7.3 Network Security Compliance. DRMNSs shall be installed behind the appropriate Internet system firewalls to protect the integrity of the network.

24.7.4 Network Architecture. The network shall be provided with net-centric architecture that fully supports local designated standards and security requirements.

24.7.5* Delivery Methods. The DRMNS shall be capable of sending alert messages to end users (recipients) via multiple delivery methods.

A.24.7.5 Distributed recipient mass notification systems would be capable of sending alert messages to end-users (recipients) via multiple delivery methods, including the following:

(1) Audio-visual network alerts to desktops and laptops via desktop pop-up
(2) Text alerts to mobile phones and pagers
(3) Text alerts to electronic mail (e-mail) clients
(4) Text alerts to social networks
(5) Audio alerts to phones
(6) Audio alerts to existing wide-area or building voice and or mass notification systems
(7) Network alerts to any other IP-connected devices via standard XML and CAP protocols

The system could be extendable to support additional delivery methods in the future as this technology develops.

24.7.6* Backup Distributed Recipient Mass Notification Systems. A DRMNS used to send emergency messages shall be provided with a backup configuration to facilitate distribution of messages.

A.24.7.6 A distributed recipient mass notification system could support multiple server and multiple site configurations to achieve a "hot standby" failover configuration (i.e., no down time in case of failure in a single server), as well as to support higher load scenarios (e.g., more users). This could be accomplished with premises-based systems or hosted configurations.

Backup configuration can either be a net-centric system architecture located behind internet firewalls or hosted off-site, outside the owner's internet firewall utilizing a hosted software and hardware configuration operated and maintained by DRMNS provider(s), or incorporate features of both configurations.

A DRMNS is a layer of MNS that is becoming both popular and useful for transmitting emergency information to large groups of people, regardless of their location at the time of the incident. A DRMNS is a flexible and reliable method of emergency alerting, as described in A.24.7.

24.8* Two-Way, In-Building Wired Emergency Services Communications Systems.

Two-way communications service in a building provides a reliable method for fire fighters and other emergency response personnel to communicate with each other during the course of an emergency.

The Code recognizes two means: two-way wired telephones/handsets and two-way radio communications enhancement systems.

Two-way telephone communications service is normally provided because fire department handheld radios may be ineffective in buildings with a great deal of structural steel or when the amount of radio traffic is heavy. The authority having jurisdiction may waive this requirement if the handheld radios used by the fire department work effectively in the specific building in question. Refer to Section 24.9 for two-way radio communications enhancement systems. See Exhibits 24.14 and 24.15 for examples of two-way telephone communications.

A.24.8 Two-way, in-building emergency services communications systems are used by fire fighters, police, and other emergency services personnel. This does not preclude equipment outside of the protected premises.

EXHIBIT 24.14

Fire Emergency Phone/Cabinet.

EXHIBIT 24.15

Two-Way Telephone Communications Service in Use.

24.8.1 Two-way telephone communications equipment shall be listed for two-way telephone communications service and installed in accordance with Section 24.8.

24.8.2 Two-way telephone communications service, if provided, shall be for use by the fire service and collocated with the in-building fire emergency voice/alarm communications equipment.

24.8.3 Monitoring of the integrity of two-way telephone communications circuits shall be in accordance with 10.19.2.

24.8.4 Additional uses shall be permitted to include signaling and communications for a building fire warden organization and signaling and communications for reporting a fire and other emergencies (e.g., voice call box service, signaling, and communications for guard's tour service).

24.8.5 Variation of equipment and system operation provided to facilitate additional use of the two-way telephone communications service shall not adversely affect performance when used by the fire service.

24.8.6* Two-way telephone communications service shall be capable of permitting the simultaneous operation of any five telephone stations in a common talk mode.

A.24.8.6 Consideration should be given to the type of telephone handset that fire fighters use in areas where high ambient noise levels exist or areas where high noise levels could exist during a fire condition. Push-to-talk handsets, handsets that contain directional microphones, or handsets that contain other suitable noise-canceling features, can be used.

If loudspeakers are required in the area where fire fighters' telephones are located, the loudspeakers should be arranged so that their sound pressure levels do not inhibit the effective use of the telephones.

Δ **24.8.7** A notification signal at the control equipment, distinctive from any other alarm, supervisory, or trouble signal, shall indicate the off-hook condition of a calling telephone circuit.

System Design Tip

During an emergency there is a high level of disruptive noises. It is important that the incident commander, or whoever is assigned to be at the fire control location, is able to differentiate the sounds and know there is an off-hook signal that has been created. The designer should be aware of all possible noise levels at the fire command center during a fire emergency when designing the ECS.

N **24.8.8** Where a selective talk telephone communications service is supplied, a distinctive visual indicator shall be furnished for each selectable circuit, so that all circuits with telephones off-hook are continuously and visibly indicated.

System Design Tip

The importance of visually indicating an off-hook circuit becomes very difficult during the emergency because the incident commander could be distracted by the emergency and the appropriate responses to the emergency. That said, he or she must be able to see the off-hook signal. The designer of the system must ensure that the system will operate as specified, and the visual indicators will get the attention of the person in the fire command center.

24.8.9 A means for silencing the audible call-in signal sounding appliance shall be permitted, where both of the following conditions are met:

(1) The means is key-operated or located in a locked cabinet or provided with protection to prevent use by unauthorized persons.
(2) The means operates a visual indicator and sounds a trouble signal whenever the means is in the silence position and no telephone circuits are in an off-hook condition.

Methods for silencing the audible call-in signal include switches, touch pads, and touch screens, but any means used must be secure.

24.8.10 If a selective talk system is used, means as specified in 24.8.9 shall be permitted, provided that subsequent telephone circuits going off-hook operate the distinctive off-hook signal.

24.8.11 Two-way telephone systems with common talk mode (i.e., a conference or party line circuit) shall be permitted.

24.8.12 In buildings provided with a two-way telephone communications system, at least one telephone station or jack shall be provided at the following locations:

(1) Each floor level
(2) Each notification zone
(3) Each elevator cab
(4) Elevator lobbies
(5) Elevator machine room(s)
(6) Emergency and standby power room(s)
(7) Fire pump room(s)

Fire pumps should be attended any time they run, particularly during a fire. The telephone in the pump room or pump house allows continuous communication between the incident commander and the pump room in the event the fire pump experiences trouble or the pump room must be evacuated.

(8) Area(s) of refuge
(9) Each floor level inside an enclosed exit stair(s)
(10) Other room(s) or area(s) as required by the authority having jurisdiction

24.8.13 If the two-way telephone system is intended to be used by fire wardens in addition to the fire service, the minimum requirement shall be a selective talk system, where phones are selected from the control location.

24.8.14 Telephone circuits shall be selectable from the control location either individually or, if approved by the authority having jurisdiction, by floor or stairwell.

24.8.15 If the control equipment provided does not indicate the location of the caller (common talk systems), each telephone station or telephone jack shall be clearly and permanently labeled to allow the caller to identify his or her location to the control center by voice.

24.8.16 If telephone jacks are provided, two or more portable handsets, as determined by the authority having jurisdiction, shall be stored at each control center for use by emergency responders.

FAQ How many portable handsets should be provided?

The number of portable handsets provided should be determined based on discussions with the authority having jurisdiction. The layout of the building, manual fire suppression strategy, rescue concerns, and other factors should be considered. The portable handsets should be kept where they are easily and quickly accessible to arriving fire fighters.

24.8.17 Wall-mounted telephone appliances or related jacks shall be not less than 36 in. (910 mm) and not more than 66 in. (1.68 m) above floor level with clear access to the appliance that is at least 30 in. (760 mm) wide.

The minimum and maximum mounting heights of telephone appliances and jacks are provided for ease of use by fire fighters and by the public when applicable.

24.8.18 If accessible to the general public, one telephone appliance per location shall be not more than 48 in. (1.22 m) above floor level.

The term *accessible* in this context means "available to and intended to be used by the general public." This includes use by floor or section fire wardens who might be required to communicate with the building ECC by means of the fire alarm system telephones. This requirement also allows the use of the telephone for communication to the ECC by anyone who may be confined to a wheelchair.

24.8.19* All circuits necessary for the operation of two-way telephone communications systems shall be installed in accordance with the pathway survivability requirements in 24.3.14.7.

This requirement helps to ensure that fire fighters' telephones will continue to work as the fire fighters are fighting the fire.

A.24.8.19 Two-way, in-building wired emergency services communications systems are intended to provide emergency service personnel and designated building occupants with a supervised, reliable communication system that is completely independent of other in-building communication systems. The survivability of two-way, in-building wired emergency services communications systems is paramount as they are intended for use during and throughout the duration of a fire or other emergency event. This kind of functionality requires that measures are taken to ensure that the system is designed, installed, and maintained in such a manner that they can survive and function under extreme conditions.

24.9 Two-Way Radio Communications Enhancement Systems.

Fire department radio systems may not operate properly where concrete and steel construction interfere with radio traffic. One means of enhancing fire department radio communications in a building is the installation of antennae and repeaters at strategic locations, typically called *bi-directional amplifier (BDA) systems*. This method is often preferred by some fire departments because it allows them to use their normal radio equipment and communications procedures in the building.

The building codes have moved to require the use of emergency responder radio systems (two-way communications enhancement systems) and away from two-way in-building wired emergency services communications systems. Where this is the case, a variance will be required by the authority having jurisdiction.

These systems are not part of the fire EVACS but are often monitored for power and trouble conditions by the fire alarm system. The requirements for the installation and design of two-way radio communications enhancement systems are covered by NFPA 1221, *Standard for the Installation, Maintenance, and Use of Emergency Services Communications Systems*.

System Design Tip

Fire departments use radios in the normal course of their response and fireground operations. The two-way radio communications enhancement system for a building is required to be designed by an FCC-licensed individual, and the system must use the same frequency as the fire department radios.

There are few if any fire alarm system designers or installers with an FCC license. Designers and installers should be aware that only a person authorized in writing by the agency holding the FCC license may sign documents affecting radio systems under *FCC Code of Federal Regulations,* Title 47, Subpart F, Section 1.917. In public safety, this person is normally the director of communications for the jurisdiction. Again, this system is not integrated with a fire alarm system with the single possible exception of monitoring its operational status. Because it is essentially a separate fire department communications system and the fire department communications individual will be responsible for frequency coordination, the NFPA 1221 technical committee requested that they be given the enforcement responsibility for these systems.

Some of the requirements are still in *NFPA 72*, Section 24.9, but the majority of the requirements are in NFPA 1221.

The testing requirements for these systems are covered in NFPA 1221. The systems can be tested independently from the fire alarm system and will often require representatives of the fire department's radio communications department to be present for the test. In many cases, a field strength test will be conducted to make sure the antenna system design is correct.

Designers are cautioned not to regard this system as a fire alarm system. However, if not installed and tested properly, this system could delay the building occupancy permit. Therefore, the acceptance testing of both systems should be coordinated with the communications fire officials as well as the fire alarm system authority having jurisdiction.

System Design Tip

System Design Tip

24.9.1 Non-interference.

Δ **24.9.1.1** No amplification system capable of operating on frequencies or causing interference on frequencies assigned to the jurisdiction by the FCC shall be installed without prior coordination and approval of the authority having jurisdiction.

• *N* **24.9.1.2** The building manager/owner shall suspend and correct other equipment installations that degrade the performance of the public safety radio system or public safety radio enhancement system.

Fire alarm designers or installers most likely will not know if radio systems are used by the building owner or manager; however, this requirement should be used to make the owner and/or manager aware of their responsibilities. Because of the potential for radio interference, it is important that the public safety answering point (PSAP) and jurisdictional communications director be made aware of the BDA systems, their locations, and any other conflicting radio signals.

System Design Tip

24.9.2 Installation and Design. All in-building two-way radio communications enhancement systems shall be designed, installed, and maintained in accordance with NFPA 1221.

24.10* Area of Refuge (Area of Rescue Assistance) Emergency Communications Systems, Stairway Communications Systems, Elevator Landing Communications Systems, and Occupant Evacuation Elevator Lobby Communications Systems.

These systems are grouped together because they are the same type of equipment that provides communications in a different location.

A.24.10 Generally, an area of refuge (area of rescue assistance) two-way emergency communications system, a stairway communications system, an elevator landing communications

system, and an occupant evacuation elevator lobby communications system are all members of the same system type fulfilling the same functions in different locations. These systems are required to be installed in different buildings by applicable building codes, and they are considered as life-safety emergency communication systems to be used by building occupants during fire and non-fire emergencies. Because they are similar and all are two-way emergency communications systems, it is appropriate that they are mandated by a common set of requirements. These systems are different in nature from the two emergency communications systems specified in 24.3.7.2(1) and 24.3.7.2(2) that are meant to be used by fire fighters or other first responders or emergency personnel.

"Areas of refuge" or "areas of rescue assistance" are areas that have direct access to an exit, where people who are unable to use stairs can remain temporarily in safety to await further instructions or assistance during emergency evacuation or other emergency situations. It is, therefore, important that a method to communicate exists between that remote location and a constantly attended location either within the building or at an off-site remote location where appropriate action for assistance can be initiated by trained personnel.

Stairway communications systems are typically provided in high-rise buildings between the fire command center and remote points located at not less than every fifth floor in stairways where the stairway doors are locked from the stair side to prevent building re-entry. It is important that a method to communicate exists between that remote location in the stairs and a constantly attended location either within the building or at an off-site remote location so that appropriate action for assistance can be initiated.

Elevator car communications systems should not be confused with an elevator landing communications system, or an occupant evacuation elevator lobby communications system. The elevator car two-way communications system is installed in accordance with the requirements of ANSI/ASME A17.1/CSA B44, *Safety Code for Elevators and Escalators*. Inspection and testing of elevator car two-way communications systems is performed in accordance with ASME A17.2, *Guide for Inspection of Elevators, Escalators and Moving Walks*.

24.10.1 Where required by the enforcing authority, governing laws, codes, or standards, any communications system specified in this section shall be installed in accordance with 24.10.2 through 24.10.11.

Δ **24.10.2*** The communications system shall comprise remotely located communications stations, a master control unit, and a primary and secondary power supply as required by Section 10.6.

•

N **A.24.10.2** The remote communications stations are also known as "call boxes." The master control unit is the main control unit for the system, which includes a visual display of the specific remote communications station location(s). Large systems with numerous remote communications stations might also include additional (sub) control unit(s) that could expand the overall capacity of the system. The secondary power supply is required in case of a loss of the primary power supply.

N **24.10.2.1** When a remote communications station(s) is activated by a building occupant(s), a two-way live voice communication shall be required to operate between the remote communications station(s) and a constantly attended location.

N **24.10.2.2*** The master control unit shall be installed in a central control point within the building.

N **A.24.10.2.2** The central control point is typically the fire command center in high-rise buildings or any other approved location in low-rise or other buildings not provided with a fire command center.

N **24.10.2.3*** The constantly attended location shall be located either within the building or at an off-site monitoring location and shall be approved by the authority having jurisdiction.

N **A.24.10.2.3** Typically the fire command center is not occupied during non-fire emergencies, and therefore the master control unit should have dial-out capability to an off-site constantly attended monitoring station. During fire emergencies, fire fighters will be in the fire command center, and they will be able to provide assistance and guidance to occupants in need.

24.10.3 The remote communications stations and the master control unit shall communicate with each other via pathways based on their performance capabilities under abnormal (fault) conditions in accordance with the requirements for Class A, Class B, Class N, or Class X pathways specified in Chapter 12.

Two-way emergency communications are defined in Chapter 3 as follows:

> **3.3.90.2 Two-Way Emergency Communications System.** Two-way emergency communications systems are divided into two categories, those systems that are anticipated to be used by building occupants [i.e., area of refuge (area of rescue assistance), OEE] and those systems that are to be used by fire fighters, police, and other emergency services personnel [i.e., stairway communications, elevator landing communications]. Two-way emergency communications systems are used to both exchange information and to communicate information such as, but not limited to, instructions, acknowledgement of receipt of messages, condition of local environment, and condition of persons, and to give assurance that help is on the way.

Designers need to ensure that the stairway communications system design also follows the building code requirements.

NFPA *101* defines the terms *area of refuge* and *accessible area of refuge* as follows:

NFPA *101* (2018)

> **3.3.23* Area of Refuge.** An area that is either (1) a story in a building where the building is protected throughout by an approved, supervised automatic sprinkler system and has not less than two accessible rooms or spaces separated from each other by smoke-resisting partitions; or (2) a space located in a path of travel leading to a public way that is protected from the effects of fire, either by means of separation from other spaces in the same building or by virtue of location, thereby permitting a delay in egress travel from any level.
>
> **3.3.23.1 Accessible Area of Refuge.** An area of refuge that complies with the accessible route requirements of ICC/ANSI A117.1, *Accessible and Usable Buildings and Facilities*.

An area of refuge has a temporary use during egress and generally serves as a staging area that provides relative safety to its occupants while potential emergencies are assessed, decisions are made, and mitigating activities are begun. NFPA *101* recognizes any floor in a building protected throughout by an approved, supervised automatic sprinkler system as an area of refuge. Circuits connecting the area of refuge communications system to the fire command center must be designed to withstand the attack of fire during the time that the occupants await assistance. Refer to the requirements of 24.3.14.9.1. If loudspeakers are required where remote area of refuge stations are located, the loudspeakers should be arranged so that their sound pressure levels do not inhibit the effective use of the area of refuge stations.

Exhibit 24.16 shows an example of an area of refuge (area of rescue assistance) station, and Exhibit 24.17 shows an area of rescue assistance sign.

In addition to the other two-way communications systems listed in Section 24.10 and those discussed previously, ANSI provides additional clarification. Section 2.27.1.1 of ANSI/ASME A17.1/CSA B44, *Safety Code for Elevators and Escalators,* requires elevator communications systems as described in the following partial excerpt. There is no requirement for pathway survivability as provided in 24.3.14.10 as Level 0 is permitted; however, if the elevator is to be used as an OEE in accordance with NFPA *101*, one should consider ensuring that all power and communications are served using survivable methods. See 21.6.

System Design Tip

EXHIBIT 24.16

Area of Rescue Assistance Station. (Courtesy of Housing Devices, Inc., Medford, MA)

EXHIBIT 24.17

Area of Rescue Assistance Sign. (Courtesy of Housing Devices, Inc., Medford, MA)

ANSI/ASME A17.1/CSA B44 (2016)

2.27.1.1 Emergency Communications

2.27.1.1.1 A two-way communications means between the car and a location staffed by authorized personnel shall be provided.

2.27.1.1.2

(a) Two-way communications shall be directed to a location(s) staffed by authorized personnel who can take appropriate action.
(b) If the call is not acknowledged [2.27.1.1.3(c)] within 45 s, the call shall be automatically directed to an alternate on- or off-site location.

Reprinted from ASME A17.1-2016, by permission of The American Society of Mechanical Engineers. All Rights Reserved.

When the elevator travels 60 ft (18 m) or more, ANSI/ASME A17.1/CSA B44 requires a two-way communications system as follows:

ANSI/ASME A17.1/CSA B44 (2016)

2.27.1.1.4 Where the elevator rise is 18 m (60 ft) or more, a two-way voice communication means within the building accessible to emergency personnel shall be provided and comply with the following requirements:

(a) The means shall enable emergency personnel within the building to establish two-way voice communications to each car individually. Two-way voice communication shall be established without any intentional delay and shall not require intervention by a person within the car. The means shall override communications to outside of the building.
(b) Two-way voice communications, once established, shall be disconnected only when emergency personnel outside the car terminates the call or a timed termination occurs. A timed termination by the two-way communication means in the elevator, with the ability to extend the call by authorized personnel, is permitted if voice notification is sent a minimum of 3 min after communication has been established. Upon notification, authorized personnel shall have the ability to extend the call; automatic disconnection shall be permitted if the means to extend are not enacted within 20 s of the voice notification.
(c) Once the two-way voice communication has been established, the visual indication [see 2.27.1.1.3(c)] within the car shall illuminate. The visual indication shall be extinguished when the two-way communication is terminated.
(d) Operating instructions shall be incorporated with or adjacent to the two-way voice communication outside the car. Instructions shall conform to 2.27.7.3.

Reprinted from ASME A17.1-2016, by permission of The American Society of Mechanical Engineers. All Rights Reserved.

24.10.4 All pathways between the remote communications stations and the master control unit shall be monitored for integrity.

24.10.5* If the central control point is not constantly attended, the master control unit shall have a timed automatic communications capability to connect with an off-site constantly attended monitoring location approved by the authority having jurisdiction, where trained personnel can initiate the appropriate response.

Δ **A.24.10.5** To ensure a timely response to a call for assistance, the call is to be forwarded to an approved off-site constantly attended location, such as a supervising station, 911 communications center, or other monitoring location. Typically, when the person in need is able to communicate, it is expected that the monitoring personnel can quickly establish the exact location of the building and the location within the building the call was made from and communicate this information to the emergency responders. However, if the person initiating the call is unable to provide the specific location within the building (or unable to communicate at all), the appropriate emergency responders will be dispatched to the specific building address. They should be able to locate the master control unit at the building's central control point and establish the exact call location within the building on the master control unit display.

The impact of a delay must always be considered.

N **24.10.6*** In the event of an off-site connection, a signal shall be transmitted to the off-site monitoring location, identifying the specific building prior to initiating the live voice two-way communication.

N **A.24.10.6** One method by which a signal is transmitted to the off-site monitoring station utilizes telephone connections in conjunction with caller ID to identify the phone number and a name associated with the building. The call is initially identified at the off-site monitoring location via caller ID information (provided by the telephone service), a prerecorded message, or other approved means, prior to initiating the two-way communications. Information provided can be used to access a database of building addresses and other related information to aid emergency responders attending the location. The intention of this section is to ensure that off-site monitoring personnel have instant access to the building address so that emergency responders can be immediately dispatched to the correct location.

24.10.7* The physical locations of the remote communications stations and the master control unit shall be as designated by the building code in force or and the system designer and approved by the authority having jurisdiction.

N **A.24.10.7** Generally, the building code, specification engineer, or system designer will identify the proposed locations of the remote communications stations, as well as the master control unit. These locations should be submitted for approval by the authority having jurisdiction based on Chapter 7 requirements. Requirements found in Section 24.10 should be coordinated with the requirements of the building code in force.

24.10.8 The specific location of each remote communications station shall be identified on the master control unit display on a floor and area basis.

N **24.10.9** The remote communications stations shall provide for hands-free, two-way communication, provide an audible and visual signal to indicate communication has occurred, and indicate to the receiver the location sending the signal.

24.10.10 Instructions for the use of the two-way communications system, instructions for summoning assistance via the two-way communications system, and written identification, including in braille, of the location shall be posted adjacent to each remote communications station.

N **24.10.11*** The communications systems specified in this section shall be permitted to be integrated with each other or other two-way emergency communications system(s) provided they are installed in accordance with Section 24.10.

N **A.24.10.11** Generally, an area of refuge (area of rescue assistance) two-way emergency communications system, a stairway communications system, an elevator landing communications system, and an occupant evacuation elevator lobby communications system are members of the same type of system. Since it is common to install these different systems in the same

building, there is no prohibition against any combination of these systems being installed in a common building as a single combination system with a single master control unit and remotely located communications stations.

24.11* Information, Command, and Control.

The requirements of Section 24.11 shall apply to the communications methods and equipment used to receive and transmit information between premises sources or premises systems and the emergency command center(s).

A.24.11 An emergency communications system information, command, and control is intended to include wired or wireless networks for one- or two-way communications and/or control between a building or area and an emergency command center and could include an emergency services organization or public alarm reporting system. In a very basic configuration, a system and the receiving facility could be a supervising station system. However, there can be more complex systems that allow control of building systems and communications to building occupants from a remote location, including a municipal or other public alarm reporting command center or possibly even from a mobile command vehicle using secure communications.

24.11.1* Emergency Command Center for Emergency Communications Systems.

A.24.11.1 For the purposes of this chapter, an emergency command center is considered to be a mass notification system facility(s), with communications and control equipment serving more than one building, where responsible authorities receive information from premises sources or systems, or from (higher level) regional or national sources or systems, and then disseminate appropriate information to a building, multiple buildings, outside campus areas, municipalities, or a combination of these in accordance with the emergency response plan established for the premises. A mass notification system could include at least one emergency command center with optional secondary/alternate emergency command centers.

Exhibit 24.18 depicts an emergency communications control unit (ECCU) in a manned ECC.

24.11.1.1* The location and accessibility of the emergency command center shall be determined by the risk analysis and approved by the emergency management coordinator.

EXHIBIT 24.18

Emergency Communications Control Unit (ECCU). (Source: Eaton, Long Branch, NJ)

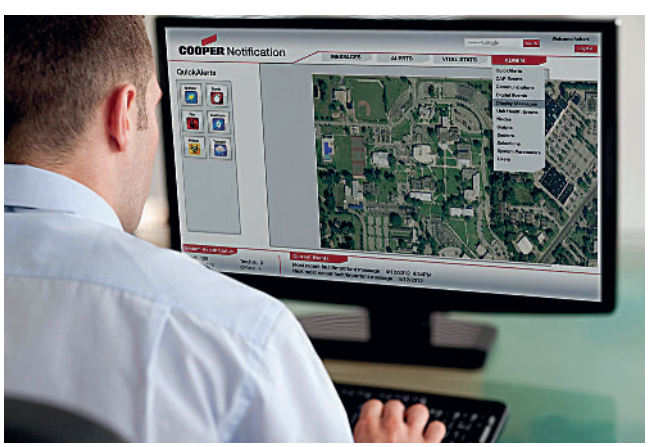

A.24.11.1.1 The location of the emergency command center should be coordinated with the first responders. The primary emergency command center should be located at the command post, emergency operations center, or some such similar location. A redundant emergency command center, if required, should be located at a physically separate location, such as a police station, fire station, or similar facility.

Generally, the primary emergency command center should be housed in a building or portion of a building separated from the rest of the facility and having a 2-hour fire-resistive-rated separation.

The mass notification system might require activation of messages originated by mobile sentries and roving patrols using wireless activation devices. In cases where clusters of facilities within the same geographical region exist, one or more regional control stations might also exercise control.

The MNS ECC for communications will usually reside in the emergency operations center for the facility.

24.11.1.2 The emergency command center shall contain the following:

(1) The in-building fire emergency voice/alarm communications system equipment including:
   (a) Fire alarm system controls
   (b) Fire alarm system annunciator
   (c) In-building fire emergency voice/alarm communications system controls
(2) Area of refuge (area of rescue assistance) emergency communications systems equipment
(3) Elevator emergency communications systems equipment
(4) Distributed recipient MNS control stations where provided
(5) Tables and chairs to accommodate emergency management staff
(6) Other equipment/information deemed necessary by the facility emergency response plan such as:
   (a) Displays indicating the location of the elevators and whether they are operational
   (b) Status indicators and controls for air-handling systems
   (c) Fire fighter's control panel for smoke control systems
   (d) Fire department communications unit
   (e) Controls for unlocking stairway doors simultaneously
   (f) Security systems
   (g) Emergency and standby power status indicators
   (h) Telephone for emergency use with controlled access to the public telephone system
   (i) Schematic building plans indicating the typical floor plan and detailing the building core, means of egress, fire protection systems, security systems, fire-fighting equipment, and fire department access
   (j) Generator supervision devices, manual start, and transfer features
   (k) Other monitoring, control, information display, and management systems associated with operation of the ECC

The list provided is not all-inclusive and should be evaluated based on the stakeholder needs and the facility's risk analysis and emergency response plan.

24.11.1.3 The level of security at the emergency command center shall be defined in the emergency response plan.

The security vulnerability analysis (SVA) for the facility should also incorporate the ECC. The security of the ECC needs to be robust to safeguard its continued operations during and after the incident from incursions by any person or outside force.

24.11.1.4* Emergency command center personnel requirements shall be defined in the documentation in the emergency response plan.

A.24.11.1.4 The emergency command center should be staffed by qualified personnel who would monitor the system and take action appropriate to the emergency response plan established for the specific premises.

24.11.1.5* Individuals expected to operate an emergency communications system shall be properly trained in the purpose, functions, procedures, and anticipated actions of such systems.

A.24.11.1.5 It is imperative that individuals expected to initiate or deliver emergency messages be properly trained in the expected operations. Individuals must be familiar with the equipment, its location, and functions if they will be expected to react properly in an emergency. In an emergency situation. people only react according to instinct or habit. If the individual has not had proper and repeated training over the emergency expectations, they could lack the proper instinct or habit.

Reading an employee manual is generally not an effective means of training for an emergency. To be effective, training must be reinforced with multiple means such as text, audio, visual, and, most importantly, hands-on experience. Regular drills allowing for delivery of live messages indicating an emergency condition is important. Many people have a very difficult time communicating clearly and effectively in an emergency situation when they are excited or fearful. If live messages are to be effective, they must be short, to the point, and in a calm tone conveying exactly what is expected. Screaming into the microphone, for instance, would not be appropriate. Actual message content will depend on the emergency response plan in place for the respective business and the response to an unfolding event. Situations such as an intruder in a building have become more common today and, as such, should be considered and planned for.

The importance of training cannot be overemphasized, and the owner should be encouraged to conduct training on a regular basis. A person cannot be expected to read a document (such as an employee manual) and be considered a trained individual ready for any emergency. The risk analysis and the emergency response plan will often dictate both the needs and the extent of training needed.

24.11.1.6 The emergency command center shall be capable of receiving voice messages by telephone or radio and transmitting via equipment at the emergency command center.

24.11.1.7 The emergency command center operator shall have the ability to monitor inputs/sensors and control output devices automatically, manually, or automatically with operator override.

24.11.2 Emergency Communications Control Unit (ECCU).

24.11.2.1 An emergency communications control unit (ECCU), where identified by the risk analysis, and defined in the emergency response plan, shall be provided at each emergency command center.

24.11.2.2 The system operator shall be able to broadcast live voice signals or activated prerecorded voice messages, tones, and other signals.

24.11.2.3 The signals shall be selectable to individual buildings; zones of buildings; individual outdoor loudspeaker arrays; zones of outdoor loudspeaker arrays; or a building, multiple

buildings, outside areas, or a combination of these, in accordance with the emergency response plan established for the premises.

24.11.2.4 The central control emergency communications control unit shall automatically or manually assign priorities to all transmitted signals.

24.11.2.5 In wide-area mass notification systems, the emergency command center shall have a primary emergency communications control unit.

24.11.2.6 Multiple emergency communications control units shall be permitted.

24.11.3* Signals. Where identified by the risk analysis and defined in the emergency response plan, the emergency communications control unit shall be permitted to automatically or manually send different messages or signals to different locations.

A.24.11.3 Different messages or signals could be prerecorded or live voice, tones, and so forth.

24.11.4 Power Supplies.

24.11.4.1 All control units shall meet the power supply requirements of Section 10.6 and 24.11.4.2.

24.11.4.2 The power supply for the emergency command center for emergency communications systems shall include an uninterrupted power source with capacity sufficient to support the emergency response plan established for the specific premises.

24.11.5 Transmission. Signals shall be capable of being automatically or manually transmitted to a regional or national emergency response center or to other nearby facilities that have a need to be alerted of the emergency.

24.11.6* Other Systems. The emergency command center shall be capable of interfacing with and controlling other notification systems, such as telephone dialers, tone alert systems, computer network alerting systems, pagers, facsimile machines, textual devices, and other visual control signs, as determined by the emergency response plan.

A.24.11.6 Text notification via wireless devices and desktop computer notification could be an effective means for delivering mass notification messages to multiple recipient groups. Supplementary wireless text messaging could be effective in reaching remote personnel. Desktop notification is particularly effective when more complex information must be conveyed, and it can be a cost-effective interim solution prior to, but not in lieu of, installing an in-building mass notification system.

24.11.7 Inspection, Testing, and Maintenance. Inspection, testing, and maintenance shall be performed on a periodic basis, as described in Chapter 14, to verify and ensure proper system operation and readiness.

24.12* Performance-Based Design of Mass Notification Systems.

The requirements of Section 24.12 shall apply to mass notification systems designed using performance-based practices.

A.24.12 The risk analysis forms the basis for the emergency response plan.

Ensuring accurate information dissemination to the right people, at the right place, and at the right time is essential to the mitigation of threat actions and consequences. Trained personnel are charged with making such decisions in real time. Quite often, the instructions provided to personnel in affected areas pertain to acting in specific defensive ways so as not to expose them to danger. A typical example is the case of a chemical or biological agent attack wherein the right response is to relocate to secure areas within the building while sealing

doors and windows and shutting down air intakes, rather than to leave the building and be exposed to the attacking agent.

In cases of bomb threats, where specific information is available, directions for evacuation are to be given; these directions require more specificity than simply the instruction "Evacuate the building." In most cases, the evacuation route might depend on threat intelligence and is likely to be different from that specified in an emergency response plan. Most people can tell where the fire comes from but do not always know where the bomb is. Automatic evacuation of a building, a common procedure in cases of a fire, is to be avoided, since it might expose personnel to even greater danger.

One of the reasons for implementing a mass notification system is the threat of terrorism. Terrorism attacks tend to be well organized and are often planned with details to inflict the widest degree of damage that is possible. The mass notification system must be designed to withstand various attack scenarios and survive even if some damage has already occurred.

Each design of a mass notification system should be specific to the nature and anticipated risks of each facility for which it is designed. Although this chapter outlines some specific criteria and/or limitations, each design should be based on recognized performance-based design practices.

The mass notification system should take into account various considerations, such as those indicated in this chapter. The particular design might or might not incorporate these provisions.

Considerations for developing a mass notification system are as follows:

(1) Specific design for the facility
(2) Account for anticipated risks
(3) Use of live and/or prerecorded messaging
(4) Interfacing with other building emergency communications systems
(5) Interfacing with wide-area notification systems
(6) Ability to control the HVAC and access control systems
(7) Access to system components
(8) Survivability of the system
(9) Communications link redundancy and security
(10) Redundancy and security of the emergency command center
(11) Ability to customize and add to prerecorded message library
(12) Messages should be tailored to the situation and audience
(13) Scripted messages for live voice messages
(14) Proper training of individuals that operate the system

24.12.1 Goals and Objectives. The performance-based design shall meet the following goals and objectives:

(1) The design criteria, design brief, system performance, and testing criteria are developed in accordance with this section.
(2) The system disseminates information to the target audience in an accurate and timely manner.
(3) The design and performance criteria are specific to the nature and anticipated risks of each location.
(4) Message initiation can be effected by all responding entities responsible for the safety and security of those affected by the events of concern.

24.12.2* Qualifications. The performance-based design and risk analysis shall be prepared by a design professional certified or approved by the authority having jurisdiction.

A.24.12.2 The design professional(s) as part of the design team should be experienced in multiple areas considered essential for conducting the risk analysis and performance design based on the scope and size of the project. Areas of experience can include, but are not limited to:

(1) Applying recognized performance-based design concepts,
(2) Conducting hazard and operability studies
(3) Technical aspects of fire alarm system design
(4) Technical aspects of emergency communication systems
(5) Security risks and/or terrorist threats
(6) Building code requirements and limitations with respect to egress
(7) Human response to emergency conditions
(8) Development of emergency response plans
(9) Other qualifications relative to the needs of the user/risk

The design professional(s) will often be a part of the engineering design team preparing project documents and specifications. However, the design professional can work for or be obtained by a qualified installation company. The design professional should be bound by professional licensing guidelines to ensure that the risk analysis is conducted in an objective manner based on user needs and not based on product or employment.

24.12.3 Independent Review. The authority having jurisdiction shall be permitted to require an approved, independent third party to review the proposed design brief and provide an evaluation of the design to the authority having jurisdiction.

24.12.4 Final Determination. The authority having jurisdiction shall make the final determination as to whether the performance objectives have been met.

24.12.5 Maintenance of Design Features. The design features required for the system to continue to meet the performance goals and objectives of this Code shall be maintained for the life of the building.

24.12.6 Performance Criteria.

24.12.6.1 General. All designs shall meet the goals and objectives specified in 24.12.1 and shall be considered equivalent, provided that the performance criterion in 24.12.6.2 is met, the design team concurs with the design, and the risk analysis considers the following factors:

(1) Number of persons to be notified
(2) Occupancy characteristics
(3) Anticipated threat
(4) Staff capabilities
(5) Coordination with the emergency response plan

24.12.6.2 Performance Criterion. The performance criterion shall include timely and accurate notification of all persons within the boundaries of the mass notification system in a medium to which they can respond when given directions by responding entities.

24.12.6.3* Design Team. The design team shall be comprised of the design professional, the owner or owner's representative, representatives of the authority having jurisdiction, and representatives of the responding entities.

A.24.12.6.3 Communication and coordination between and among the various members of the design team is an important element to achieving the goals for performance of the system.

24.12.6.4 Risk Analysis. The design of the mass notification system shall be based upon a risk analysis prepared in accordance with 24.3.12 specific to the nature and anticipated risks of each facility for which it is designed.

24.12.6.5 Operational Status and System Effectiveness. The performance of the system shall reflect the documented performance and reliability of the components of those systems or features, unless design specifications are incorporated to modify the expected performance.

24.12.6.5.1 The inclusion of trained employees as part of the mass notification system shall be identified and documented.

24.12.6.5.2 Emergency Response Personnel. The design shall consider the characteristics or other conditions related to the availability, speed of response, effectiveness, roles, and other characteristics of emergency response personnel.

24.12.6.6* Design Brief. The design of the mass notification system shall include the preparation of a design brief that is prepared utilizing recognized performance-based design practices.

Δ **A.24.12.6.6** The *SFPE Engineering Guide to Performance-Based Fire Protection* provides guidance on the elements of a design brief.

24.12.6.6.1 Design specifications and briefs used in the performance-based design shall be clearly stated and shown to be realistic and sustainable.

24.12.6.6.2 Specific testing requirements that are necessary to maintain reliable performance shall be stated in the design brief.

24.13 Documentation for Emergency Communications Systems.

24.13.1 New Systems. Documentation requirements for new emergency communications systems shall comply with Sections 7.3 through 7.8 in addition to the minimum requirements of Section 7.2.

References Cited in Commentary

ANSI/ASME A17.1/CSA B44, *Safety Code for Elevators and Escalators,* 2016, American National Standards Institute, Inc., New York, NY.

ANSI/UL 864, *Standard for Control Units and Accessories for Fire Alarm Systems*, 10th edition, 2014, Underwriters Laboratory, 333 Pfingsten Road, Northbrook, IL

ANSI/UL 2572, *Mass Notification Systems*, 2nd edition, 2016, Underwriters Laboratory, 333 Pfingsten Road, Northbrook, IL.

FCC Code of Federal Regulations, Title 47, Subpart F, Section 1.917, U.S. Government Publishing Office, Washington, DC.

ICC/ANSI A117.1, *Accessible and Usable Buildings and Facilities,* 2009, International Code Council, Falls Church, VA.

NFPA 4, *Standard for Integrated Fire Protection and Life Safety System Testing*, 2018 edition, National Fire Protection Association, Quincy, MA.

NFPA 70®, *National Electrical Code®*, 2017 edition, National Fire Protection Association, Quincy, MA.

NFPA *101®*, *Life Safety Code®*, 2018 edition, National Fire Protection Association, Quincy, MA.

NFPA 1221, *Standard for the Installation, Maintenance, and Use of Emergency Services Communications Systems,* 2019 edition, National Fire Protection Association, Quincy, MA.

NFPA 1600®, *Standard on Disaster/Emergency Management and Business Continuity/Continuity of Operations Programs*, 2019 edition, National Fire Protection Association, Quincy, MA.

NFPA 1620, *Standard for Pre-Incident Planning,* 2015 edition, National Fire Protection Association, Quincy, MA.

United Facilities Criteria (UFC 4-021-01), *Design and O&M: Mass Notification Systems,* 9 April 2008, Change 1, 2010, U.S. Department of Defense, Washington, DC.

Reserved Chapter

In the 2019 edition of *NFPA 72®*, *National Fire Alarm and Signaling Code®*, Chapter 25 is reserved for future use.

Supervising Station Alarm Systems

CHAPTER

26

Chapter 26 provides the requirements for three supervising station services: central station, proprietary station, and remote station. It also provides the requirements for various transmission technologies.

The 2019 edition of *NFPA 72®*, *National Fire Alarm and Signaling Code®*, resulted in the addition or deletion of several definitions used in the chapter. The following list is a summary of significant revisions to Chapter 26 for the 2019 edition of the Code:

- Incorporated many requirements that had been in NFPA 720, *Standard for the Installation of Carbon Monoxide (CO) Detection and Warning Equipment,* which were applicable to the requirements in the chapter for other alarm systems.
- Eliminated the use of exceptions in concert with other *NFPA 72* chapters. Users of the Code should read all subsections related to a specific code section carefully because the material in these subsections may have existed as exceptions in previous editions of the Code.
- Revised the chapter by rewriting sections that had contained more than one requirement under a single code section number. Revisions result in no more than one requirement per section number. These changes bring the chapter into compliance with NFPA's *Manual of Style.*
- Replaced references to *public switched telephone network (PSTN)* with *managed facilities-based voice network (MFVN)*. MFVNs include equipment that was historically categorized as PSTN.
- Added an allowance in 26.6.3.13.1.2 for secondary power where two performance-based transmission pathways are provided where a single pathway is required.
- Supervising stations, other than a communications center, may delay the retransmission of trouble signals by up to 15 minutes to allow a trouble signal to restore on its own. This requirement is in 26.3.8.3.4(1) and 26.5.6.3.3.2.
- Aligned the requirements for central station service, proprietary supervising station alarm systems, and remote supervising station alarm systems.

26.1* Application.

The performance, installation, and operation of alarm systems at a continuously attended supervising station and between the protected premises and the continuously attended supervising station shall comply with the requirements of this chapter.

Chapter 26 covers the requirements for the connection of a protected premises fire alarm system to, and the monitoring by, a continuously attended supervising station. This includes the transmission of signals from fire alarm control units (FACUs) that monitor systems, which may include alarm devices such as smoke and heat detectors and manual fire alarm boxes, as well as systems that supervise only suppression systems. New requirements address carbon monoxide (CO) systems that may be standalone or a part of a protected premises fire alarm system. Systems incorporating CO devices may also transmit signals off-premise to a supervising station based on the requirements of other codes or when required by the system owner.

Supervising station locations may be a central station, a proprietary supervising station, or a remote supervising station. The supervising station location, where permitted, would be part of one of the three defined types of supervising station alarm systems: central station, proprietary

EXHIBIT 26.1

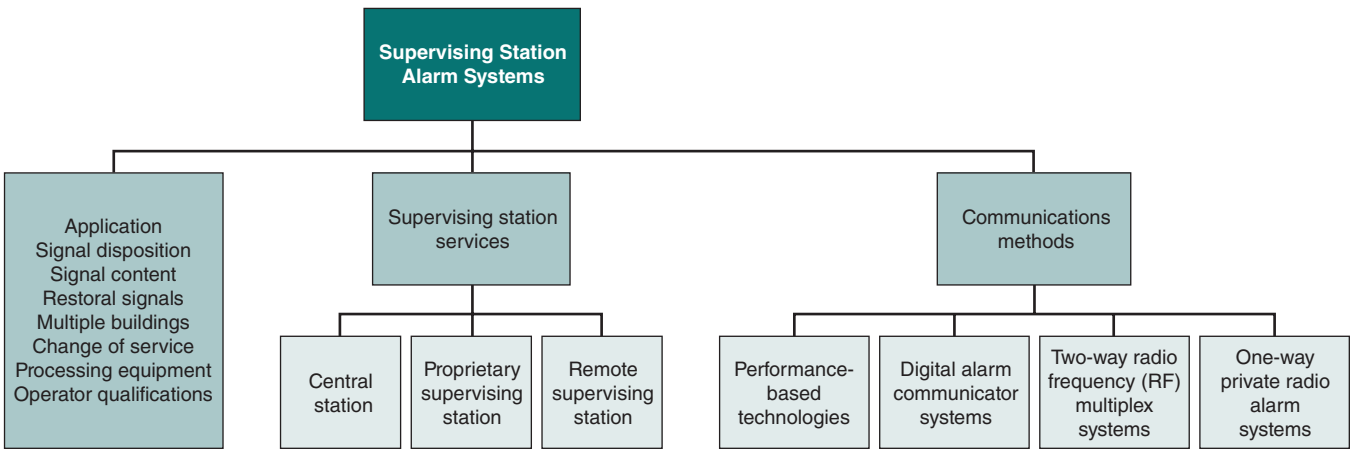

Organization of Chapter 26.

supervising station or remote supervising station alarm systems. See Exhibit 26.1 for an illustration of the organization of Chapter 26.

A.26.1 Table A.26.1 provides a tool for users of the Code to easily and systematically look up requirements for protected premises, central station service, remote supervising station, and proprietary supervising station alarm systems.

Δ ***TABLE A.26.1*** *Alarm System Performance Criteria*

Attribute	*Protected Premises Fire Alarm System*	*Central Station Service Alarm System*	*Remote Supervising Station Alarm System*	*Proprietary Supervising Station Alarm System*
Applicability	All fire alarm systems	Supervising station service provided by a prime contractor. There is a subscriber *(26.3.2, 26.3.3, and 26.3.4)*.	Where central station service is neither required nor elected, properties under various ownership monitored by a remote supervising station *(26.5.1.1 and 26.5.1.2)*	Supervising station monitoring contiguous or noncontiguous properties under one ownership and responsible to the owner of the protected property *(26.4.2.1 and 26.4.2.2)*
Listing	Equipment listed for the use intended *(10.3)*	Equipment listed for the use intended *(10.3)*. Compliance documentation *(26.3.4)*.	Equipment listed for use intended *(10.3)*	Equipment listed for use intended *(10.3)*
Design	According to Code by experienced persons *(10.5.1)*	According to Code by experienced persons *(10.5.1)*	According to Code by experienced persons *(10.5.1)*	According to Code by experienced persons *(10.5.1)*
Compatibility	Detector devices pulling power from initiating or signaling circuits listed for control unit *(10.3.3)*	Detector devices pulling power from initiating or signaling circuits listed for control unit *(10.3.3)*	Detector devices pulling power from initiating or signaling circuits listed for control unit *(10.3.3)*	Detector devices pulling power from initiating or signaling circuits listed for control unit *(10.3.3)*

Δ ***TABLE A.26.1*** *Continued*

Attribute	*Protected Premises Fire Alarm System*	*Central Station Service Alarm System*	*Remote Supervising Station Alarm System*	*Proprietary Supervising Station Alarm System*
Performance and limitations	85% and 110% of the nameplate rated input voltage, 32°F (0°C) and 120°F (49°C) ambient temperature, 85% relative humidity at 86°F (30°C) *(10.3.5)*	85% and 110% of the nameplate rated input voltage, 32°F (0°C) and 120°F (49°C) ambient temperature, 85% relative humidity at 86°F (30°C) *(10.3.5)*	85% and 110% of the nameplate rated input voltage, 32°F (0°C) and 120°F (49°C) ambient temperature, 85% relative humidity at 86°F (30°C) *(10.3.5)*	85% and 110% of the nameplate rated input voltage, 32°F (0°C) and 120°F (49°C) ambient temperature, 85% relative humidity at 86°F (30°C) *(10.3.5)*
Documentation	Authority having jurisdiction notified of new or changed specifications, wiring diagrams, battery calculations, floor plans. Statement from contractor that system meets manufacturer's published instructions and NFPA requirements *(7.5.2)*. Record of completion *(7.5.6)*. Results of evaluation required in 23.4.3.1 *(23.4.3.3)*.	Authority having jurisdiction notified of new or changed specifications, wiring diagrams, battery calculations, floor plans. Statement from contractor that system meets manufacturer's published instructions and NFPA requirements *(7.5.2)*. Record of completion *(7.5.6)*. Results of evaluation required in 23.4.3.1 *(23.4.3.3)*.	Authority having jurisdiction notified of new or changed specifications, wiring diagrams, battery calculations, floor plans. Statement from contractor that system meets manufacturer's published instructions and NFPA requirements *(7.5.2)*. Record of completion *(7.5.6)*. Results of evaluation required in 23.4.3.1 *(23.4.3.3)*.	Authority having jurisdiction notified of new or changed specifications, wiring diagrams, battery calculations, floor plans. Statement from contractor that system meets manufacturer's published instructions and NFPA requirements *(7.5.2)*. Record of completion *(7.5.6)*. Results of evaluation required in 23.4.3.1 *(23.4.3.3)*.
Supervising station facilities	None	UL 827-compliant for the supervising station and any subsidiary station *(26.3.5.1 and 26.3.5.2)*	Communications centers or other location acceptable to the authority having jurisdiction *(26.5.3)*	Fire-resistive, detached building or cut-off room not near or exposed to hazards. Access restricted, NFPA 10, 26-hour emergency lighting *(26.4.3)*.
Testing and maintenance	Chapter 14	Chapter 14. Pass code must be provided to place system into test mode *(26.3.8.3.5.6)*.	Chapter 14	Chapter 14
Runner service	No	Yes Alarm — arrive at the protected premises within 2 hours where equipment needs to be reset. Guard's tour — 30 minutes. Supervisory — 2 hours. Trouble — 4 hours. *(26.3.8)*	No	Yes Alarm — arrive at the protected premises within 2 hours where equipment needs to be reset. Guard's tour — 30 minutes. Supervisory— 2 hours. Trouble — 4 hours. *(26.4.6.1.6)*
Operations and management requirements	None	Prime contractor provides all elements of central station service under a variety of contractual arrangements *(26.3.3)*	None	Supervising station is under same ownership and management responsibility as premises being supervised *(26.4.2.1)*

(*continues*)

Δ ***TABLE A.26.1*** *Continued*

Attribute	*Protected Premises Fire Alarm System*	*Central Station Service Alarm System*	*Remote Supervising Station Alarm System*	*Proprietary Supervising Station Alarm System*
Staff	None	Minimum of two persons on duty at supervising station. Operation and supervision primary task *(26.3.7)*.	Minimum of two persons on duty at supervising station at all times. Other duties permitted per the authority having jurisdiction *(26.5.5)*.	Two operators of which one may be the runner. When runner is not in attendance at station, time between contact not to exceed 15 minutes. Primary duties are monitoring alarms and operations of station *(26.4.5)*.
Monitor supervisory signals	Control unit and command center *(10.14.1 and 10.14.2)*	Control unit, command center, and central station *(10.14.1 and 10.14.2)*	Control unit, command center, and remote supervising station *(10.14.1 and 10.14.2)*	Control unit, command center, and proprietary supervising station *(10.14.1 and 10.14.2)*
Retransmission of signals	None	Alarm to public service communications center and subscriber. Supervisory, trouble, and guard service to designated personnel *(26.3.8)*.	Alarm to public service communications center when monitored privately. Supervisory and trouble signals to owner's designated representative *(26.5.6)*.	Alarm to public service communications center and plant brigade. Supervisory, trouble, and guard service to designated personnel *(26.4.6.1.6)*.
Retransmission time	None	Alarm — immediate. Supervisory — immediate. Guard's tour supervisory — without unreasonable delay. Trouble — immediate. *(26.3.8)*	Alarm — immediate. Supervisory — immediate. Trouble — immediate. *(26.5.6)*	Alarm — immediate. Supervisory — immediate. Guard's tour supervisory — at once. Trouble — immediate. *(26.4.6.1.6)*
Records	Current year and 1 year after *(7.7.1)*	Complete records of all signals received must be retained for at least 1 year. Reports provided of signals received to authority having jurisdiction in a form it finds acceptable *(26.3.9)*.	At least 1 year *(26.5.8.1)*.	Complete records of all signals received shall be retained for at least 1 year. Reports provided of signals received to authority having jurisdiction in a form it finds acceptable *(26.4.7)*.

Table A.26.1 compares the performance characteristics of different protected premises alarm systems.

26.1.1* Where any system regulated by this Code sends signals to a supervising station, the entire system shall become a supervising station alarm system.

FAQ

When an alarm system at a protected premises transmits a signal to a supervising station, what designation does the system take?

Once an alarm system connects to a supervising station, the entire alarm system becomes a supervising station alarm system. Some users and some authorities having jurisdiction may think that only

the part of the system that actually connected to or interfaced with the supervising station comprises the supervising station alarm system. Subsection 26.1.1 clarifies that once any alarm system regulated by this Code connects to a supervising station, the entire system becomes a supervising station alarm system.

A.26.1.1 Supervising station alarm systems include the equipment at the protected premises as well as the equipment at the supervising station itself. While the operational requirements relating to the signals sent off-premises fall under the scope of Chapter 26, the requirements of Chapter 23 also apply. For example, for protected premises fire alarm systems, refer to Figure A.26.1.1.

The example in Figure A.26.1.1 correlates requirements between the chapter on protected premises alarm and signaling systems (Chapter 23) and the chapter on supervising station alarm systems (Chapter 26). The figure illustrates that all the components and subsystems in either arrangement constitute a supervising station alarm system.

Figure A.26.1.1 shows the responsibility of each of the two chapters for the two common arrangements of fire alarm systems transmitting from a protected premises to a supervising station. In the first arrangement, the fire alarm system master control unit connects to a supervising station transmitter at the protected premises that, in turn, transmits either to an off-site supervising station or to a supervising station at some other location on the same site. In the second arrangement, the fire alarm system master control unit is colocated with the supervising station at the protected premises.

26.1.2 The requirements of Chapters 7, 10, 12, 14, and 23 shall apply unless otherwise noted in this chapter.

26.1.3 The requirements of this chapter shall not apply to Chapter 29 unless otherwise noted.

The requirements of Chapter 26 apply to any occupancy, building or structure where an owner or authority having jurisdiction requires a significantly higher level of service.

Subsections 26.1.2 and 26.1.3 set the parameters for the other portions of the Code that apply to supervising station alarm systems. In 26.1.3, the requirements of Chapter 26 apply only to household signaling systems as directed by Chapter 29.

26.2 General.

26.2.1 Alarm Signal Disposition.

This subsection emphasizes the importance of taking action when a supervising station receives fire alarm signals from a protected premises. Language permitting alarm signal preverification was included in the 2013 edition and was removed after only a single code cycle because it was not practical to implement and added a confusing step to the process.

26.2.1.1 Alarm signals initiated by manual fire alarm boxes, automatic fire detectors, waterflow from the automatic sprinkler system, or actuation of other fire suppression system(s) or equipment shall be treated as fire alarm signals.

26.2.1.2* Except as permitted by 26.2.2 and 29.10.9.7, all fire alarm signals received by a supervising station shall be immediately retransmitted to the communications center.

A.26.2.1.2 The term *immediately* in this context is intended to mean "without unreasonable delay." Routine handling should take a maximum of 90 seconds from receipt of an alarm signal.

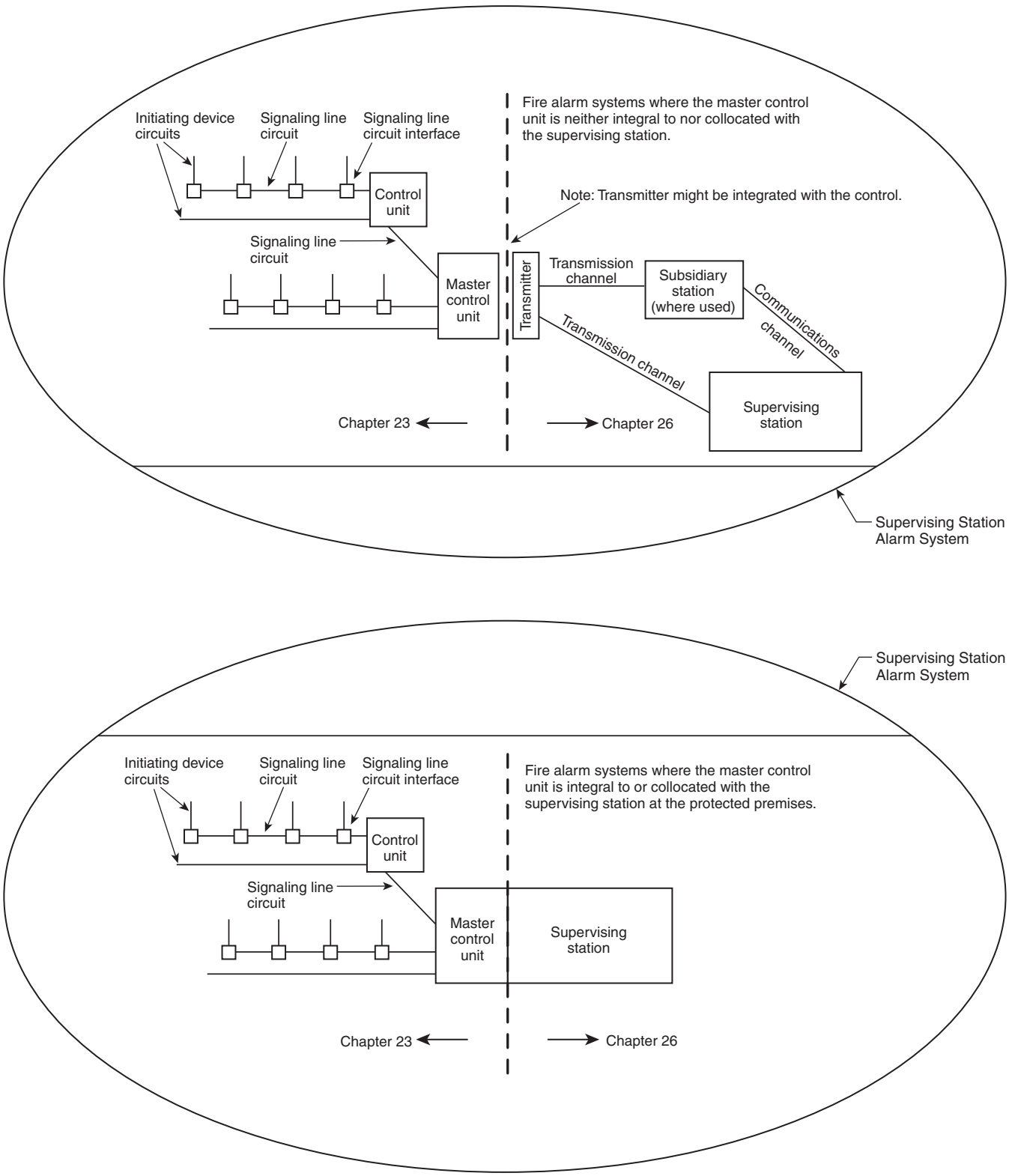

FIGURE A.26.1.1 *Supervising Station Alarm System.*

A definition of the term *immediately* (as used in Chapter 26) has been added to 3.3.137. The definition is limited to use in Chapter 26.

Δ **26.2.1.3** Fire alarm signals received at the supervising station shall be retransmitted to the communications center by one of the following methods:

(1) Signals that are identified by zone at the supervising station shall be retransmitted by zone to the communications center.
(2) Signals that are identified as an individual point or points at the supervising station shall be retransmitted by point or points to the communications center.
(3)* Signals that are received at the supervising station as events shall be retransmitted by event to the communications center.

N **A.26.2.1.3(3)** Events can be general alarm signals or other fire alarm signals not identified individually by point or zone.

Paragraphs 26.2.1.3(1) and (2) clarify that if the supervising station receives signals from a protected premises with a specific description such as "Sprinkler Riser 1 — First Floor" or "First Floor Elevator Lobby Smoke Detector," this information is required to be retransmitted to the communications center. This provides responding fire department personnel additional information related to the location of a fire alarm device or zone activation in a building as well as the subsequent location(s) of additional fire alarm devices or zones that may be received by the supervising station. This information may be used by the fire department to alter its response by either increasing or decreasing the amount of apparatus and personnel responding to the incident and whether the response should occur in either an emergency or non-emergency fashion.

New paragraph 26.2.1.3(3) for the 2019 edition of the Code requires that the supervising station retransmit any other alarm signals it receives to the communications center. Note that the Code does not currently set a limit to the amount of information, or the number of signals, that will be retransmitted to the communications center.

• **26.2.2*** **Fire Alarm Signal Verification.** For applications other than those addressed under the scope of 29.10.9.7, supervising station personnel shall attempt to verify alarm signals prior to reporting them to the communications center only where all the following conditions exist:

(1)* Alarm signal verification is required by the responsible fire department for a specific protected premises.
(2) Documentation of the requirement for alarm signal verification is provided by the responsible fire department to the supervising station and the protected premises.
(3) If the requirement for verification changes, the responsible fire department notifies the supervising station and the protected premises.
(4)* The verification process does not take longer than 90 seconds from the time the alarm signal is received at the supervising station until the time that retransmission of the verified alarm signal is initiated.
(5) Verification of a true fire is received from anyone on premises or verification of an unwanted alarm signal is received only from a pre-assigned list of authorized personnel within the protected premises.
(6)* Verified alarm signals are immediately retransmitted to the communications center and include information that the signal was verified at the protected premises to be an emergency.
(7)* Alarm signals where verification is not conclusive are immediately retransmitted to the communications center.

(8)* Alarm signals that are verified as unwanted alarms shall be reported to the responsible fire department in a manner and at a frequency specified by the responsible fire department.

A.26.2.2 The term *immediately* in this context is intended to mean "without unreasonable delay." Routine handling should take a maximum of 90 seconds from receipt of an alarm signal or at the end of the verification time by the supervising station until the initiation of retransmission to the communications center.

A.26.2.2(1) It is recognized that individual fire departments will have a preference on whether verification is used in certain occupancies based on many variables such as department-specific staffing or response protocols, occupancy staffing, and occupancy risk. This section allows the fire authority to specifically select those occupancies where verification is allowed. It should be understood that the use of the alarm verification process could delay the response to the alarm by up to an additional 90 seconds.

A.26.2.2(4) The 90-second allowance for a supervising station to call the protected premise to verify the validity of the received alarm signal is in addition to the time allowed for the supervising station to initiate the retransmission to the communications center.

Annex A language for condition (4) indicates that the 90 seconds for alarm signal verification is "in addition to" the 90 seconds for retransmission.

A.26.2.2(6) It is important to notify the communications center that an alarm signal was verified and that fire conditions exist at the protected premises or that some other type of an emergency exists. Fire departments typically have a substantially larger response for confirmed structure fires.

A.26.2.2(7) If an alarm signal cannot be reliably confirmed as a nuisance alarm, then it should be immediately retransmitted. This might include situations where no contact is made within the premises, or where the persons within the premises cannot verify the source of the alarm within the allowable 90 seconds, or other related scenarios.

A.26.2.2(8) When verification of a fire alarm signal results in a signal not being reported to the communications center, it is important that fire department personnel be made aware of the alarm and the reason for nondispatch so that problematic systems can be identified.

Subsection 26.2.2 reduces fire department responses to nuisance fire alarm system activations. The verification process is carried out by the supervising station. To prevent serious consequences and potential liabilities of failing to report an emergency to the communications center due to faulty verification, these requirements prescribe a strict verification protocol. No verification is permitted unless desired and documented, in writing, by the responsible fire department on a premises-by-premises basis. Where permitted, one or more persons from the protected premises must be prearranged as authorized to provide verification. When an alarm signal is received, verification will be accepted only from those personnel and only if they are currently in the protected premises. It is important to note that alarm signal verification does not apply to CO signals received by a supervising station.

• **26.2.3 Alarm Signal Content.** Where required by the enforcing authority, governing laws, codes, or standards, alarm signals transmitted to a supervising station shall be by addressable device or zone identification.

This subsection defers to another authority's requirement for alarm signals to include detailed information about the alarm, either at the initiating device level for addressable systems or at the zone level for conventional systems. In effect, this requirement permits, but does not mandate, specific alarm signal

information to be transmitted. This requirement does not apply to supervisory or trouble signals. Refer to 26.2.1.3, which provides requirements that must be followed by the supervising station when receiving specific alarm signal information from a protected premises.

N 26.2.4 Carbon Monoxide Signal Disposition.

NFPA 720

For the 2019 edition, many of the CO requirements that had been in NFPA 720 have been moved into Chapter 26 where they apply to the requirements for supervising station alarm systems.

N 26.2.4.1 Carbon Monoxide Alarm Signal Disposition.

N **26.2.4.1.1** A carbon monoxide alarm signal shall take precedence over supervisory or trouble signals.

A CO signal's priority is above a supervisory or trouble signal, but below a fire alarm signal or mass notification signal.

N **26.2.4.1.2** The actuation of a carbon monoxide detector or system shall be distinctively indicated as a carbon monoxide alarm signal.

N **26.2.4.1.3*** Servicing of a system in alarm that cannot be reset shall be in accordance with Chapter 14 and shall occur within 4 hours of the carbon monoxide alarm signal.

N **A.26.2.4.1.3** If a carbon monoxide detector cannot be reset in accordance with Chapter 14, it could indicate that carbon monoxide is still present in the premises. Until such time that carbon monoxide can be excluded as the source of the alarm, the assumption should be that carbon monoxide is present and appropriate life safety precautions should be followed.

N **26.2.4.1.4** Upon receipt of a carbon monoxide alarm signal, supervising station personnel shall perform the following actions in the order listed:

(1) Where required by the emergency response agency, immediately retransmit indication of the carbon monoxide alarm signal to the communications center
(2) Contact the responsible party(s) in accordance with the notification plan
(3) Once contacted, inform the subscriber to take one of the actions in (a) or (b):
  (a) Where the subscriber has a carbon monoxide emergency response plan, implement the plan
  (b) Where the subscriber has no carbon monoxide emergency response plan:
    i. Immediately move to fresh air, either outdoors or by an open door or window
    ii. Verify that all occupants are accounted for
    iii. Do not re-enter the premises or move away from an open door or window until the emergency service responders have arrived, the premises have been aired out, and the alarm returns to its normal condition

This paragraph provides operational requirements for the supervising station when a CO alarm signal is received. Note there are no similar requirements for the communications center in *NFPA 72* as those requirements are best covered by NFPA 1221, *Standard for the Installation, Maintenance, and Use of Emergency Services Communications Systems.*

N **26.2.4.2 Carbon Monoxide Trouble Signal Disposition.**

N **26.2.4.2.1** Upon receipt of a carbon monoxide trouble signal, the responsible party(s) shall be notified.

Trouble signals from CO warning devices generally do not warrant notification at a communications center because they typically reflect the need to perform maintenance on the device. This service would not normally be done by fire department personnel. A responsible party, which may include the system owner or service company of record for the building, would be the appropriate party to contact to address the trouble signal and to restore the device to its normal condition.

N **26.2.4.2.2** Servicing of a system in trouble shall be in accordance with Chapter 14 and shall occur within 4 hours of the trouble indication.

N **26.2.4.2.3** Carbon monoxide end-of-life signals, if provided, shall be treated as trouble signals.

26.2.5 Restoral Signals.

Other parts of Chapter 26 include requirements for the restoration of activated systems, including notification, response, and the reporting of extended outages. The transmission of restoral signals is a prerequisite for the supervising stations to meet those other requirements.

26.2.5.1 All supervising station fire alarm systems shall be programmed to report restoral signals to the supervising station of all alarm, supervisory, and trouble signals upon restoration of the activation.

Δ **26.2.5.2** Except as permitted in 26.2.5.2.2, any signal received by the supervising station that has not restored to normal condition within 24 hours of initial receipt shall be redisplayed to an operator as a nonrestored signal.

N **26.2.5.2.1** A nonrestored signal that is redisplayed shall be reported to the subscriber.

N **26.2.5.2.2*** Paragraph 26.2.5.2 shall not apply to signals received as a result of a scheduled impairment.

A.26.2.5.2.2 Scheduled impairments include interruptions caused by construction or building damage. In addition, natural disasters can result in long-term system impairments that are not intended to require 24-hour reminders.

This requirement addresses problem systems. It calls for redisplay of nonrestored signals to cause the supervising station operator to remind the premises owner to take timely corrective action and not let systems remain in a silenced trouble state indefinitely. Paragraph 26.2.5.2.2 and related Annex A text clarify that planned building construction for renovations or prolonged repairs due to natural disasters do not require this reminder.

26.2.6 Multiple Buildings. For multiple building premises, the requirements of 10.18.5.3 shall apply to the alarm, supervisory, and trouble signals transmitted to the supervising station.

Identification of the separate buildings is required for supervising station systems serving more than one building.

26.2.7* Change of Service.

A.26.2.7 Changing where signals go from an existing to a new or different supervising station facility is sometimes done simply by changing a call-forward phone number. Or, within a supervising station, a new receiving computer and software can be constructed and lines changed over. Often, the account data are manually entered into the new system. Sometimes the data are transferred electronically. Errors can be made, causing the supervising station to get undefined alarms or incorrect account data, resulting in incorrect response by the supervising station. When such changes are made, the only viable way to ensure correct operation is to conduct an end-to-end test.

26.2.7.1* Supervising station customers or clients and the authority having jurisdiction shall be notified in writing by the new supervising station within 30 calendar days of any change of service provider that results in signals from the client's property being handled by a new supervising station.

A.26.2.7.1 The phrase "notified in writing" can include any form of correspondence that can be verified upon request, such as a letter, fax, email or other means of documented transfer of information from one entity to another.

FAQ Why is it important to notify supervising station customers of changes in service?

These requirements emphasize the importance of notifying the customer in writing of changes to the service provided by a supervising station. Such changes often occur when one supervising station buys the client accounts of another supervising station. Commonly, instead of visiting each customer's protected building to reprogram the supervising station transmitter, the supervising station will call-forward the receiving telephone line (number) to a new receiving telephone line (number). [Note the additional testing and reporting requirements of 26.6.4.1.5(8) for call forwarded lines.] This action may make the change in receiving location completely transparent to the customer. To maintain the effective integrity of the quality of the service provided, the customer must know whenever changes occur.

26.2.7.2 Where the new provider of supervising station services covered by 26.2.7.1 also provides the required testing, the new provider shall test zones, points, and signals from each affected property in accordance with the requirements of Chapter 14 at or prior to the next scheduled periodic test.

26.2.7.3 Where the new provider of supervising station services covered by 26.2.7.1 does not provide the required testing, the new provider shall notify the alarm system owner of the need to test zones, points, and signals from each affected property in accordance with the requirements of Chapter 14 prior to or at the next scheduled periodic test.

Paragraphs 26.2.7.1, 26.2.7.2, and 26.2.7.3 identify who is responsible for making notifications and to define more clearly the time required to complete the notifications and testing following a change in service.

26.2.7.4 The supervising station shall notify the authority having jurisdiction prior to terminating service.

26.2.8 Supervising Station Signal Processing Equipment. Signal processing equipment located at the supervising station listed to ANSI/UL 60950, *Information Technology Equipment — Safety — Part 1: General Requirements*, and used for computer-aided alarm and supervisory signal processing shall not be required to comply with 10.3.5 provided it is installed and operated conforming to ANSI/UL 1981, *Central Station Automation Systems*,

within an environment that is maintained at a level within the temperature, humidity, and voltage rating range of the equipment, and the equipment manufacturer's published instructions are available for examination.

Listed signal processing equipment at the supervising station, such as routers, switches, modems, and computers are exempt from the conditions specified in 10.3.5 if the environment in which they are operating is controlled to limit the temperature, humidity, and voltage variations to levels within the manufacturer's marked ratings.

26.2.9 Qualification of Supervising Station Operators. Supervising station operators shall be qualified in accordance with the requirements of 10.5.5.

This makes specific reference to the requirements in 10.5.5 for the qualifications and competence of operators at the supervising station. These include the following:

- All operators in the supervising station must demonstrate competence in all tasks required of them by means of one or more of the following:
  - Be certified by the manufacturer of the receiving system or equipment or the alarm-monitoring automation system
  - Be certified by an organization acceptable to the authority having jurisdiction
  - Be licensed or certified by a state or local authority
  - Have other training or certification approved by the authority having jurisdiction
- All operators in the supervising station must present evidence of qualifications and/or certification when requested by the authority having jurisdiction.
- A license or qualification listing must be current in accordance with the requirements of the issuing authority or organization.
- Operator trainees must be under the direct supervision of a qualified operator until each becomes personally qualified.

26.3 Central Station Service Alarm Systems.

Alarm systems used to provide central station service shall comply with the general requirements and the use requirements of Section 26.3.

A central station service alarm system provides an effective tool for managing the protection at the facility. Exhibit 26.2 shows an example of a central station. Property insurance companies have required high-value industrial and commercial facilities to have at least one of the following: continuous occupancy in all areas of the facility, recorded guard patrol tours in all unoccupied areas, or a complete central station service alarm system.

The requirements governing central station service alarm systems are in Section 26.3. The act of sending a signal to a listed central station is just one of many requirements that must be adhered to for an alarm system to qualify as a central station service alarm system. The numerous requirements in Section 26.3 have led some to determine that this type of system provides a higher level of service than proprietary supervising station and remote supervising station alarm systems.

Despite the many benefits of true central station service alarm systems, they are not as prevalent as remote supervising station alarm systems. NFPA *101®*, *Life Safety Code®*, and model building and fire codes, permit alarm signals to be transmitted to any of the three types of systems identified in *NFPA 72*; however, some states or jurisdictions may have specific requirements.

EXHIBIT 26.2

Central Station with Display in Background Indicating Signal Traffic and Availability to Process Incoming Signals. (Source: Johnston Controls, Westminster, MA)

26.3.1 System Scope. Alarm systems for central station service shall include the central station physical plant, exterior communications channels, subsidiary stations, and alarm and signaling equipment located at the protected premises.

26.3.2* Service Scope. Section 26.3 shall apply to central station service, which consists of the following elements:

(1) Installation of alarm transmitters
(2) Alarm, guard, supervisory, and trouble signal monitoring
(3) Retransmission
(4) Associated record keeping and reporting
(5) Testing and maintenance
(6) Runner service

A.26.3.2 There are related types of contract service that often are provided from, or controlled by, a central station but that are neither anticipated by, nor consistent with, the provisions of 26.3.2. Although 26.3.2 does not preclude such arrangements, a central station company is expected to recognize, provide for, and preserve the reliability, adequacy, and integrity of those supervisory and alarm services intended to be in accordance with the provisions of 26.3.2.

As provided in 26.3.2, central station service consists of six distinct service elements. At the protected premises there are installation of transmitters, testing and maintenance, and runner service; at the supervising station there are monitoring of signals, retransmission of signals, and record keeping and reporting.

A prime contractor (see 3.3.209) is contractually responsible for providing the central station services listed in 26.3.2. The prime contractor may be capable of providing all of the listed services or

may only provide a portion of the services. Where the prime contractor only provides a portion of the required services they are permitted to subcontract the remaining services. A typical situation where subcontracting might occur includes a facility where a sprinkler system installer, acting as a subcontractor of the listed central station operating company, installs the fire alarm and supervisory initiating devices on the sprinkler system at a protected premises.

FAQ

What important distinctions are involved when true central station service is provided?

System Design Tip

Many alarm system installers connect protected premises alarm systems to a location remote from the protected premises that monitors signals. Relatively few such arrangements meet the requirements of 26.3.2 and should not be called central station service. (See 26.3.4.5.) Only service that incorporates all six elements of central station service provided by listed alarm service providers that design, specify, install, test, maintain, and use the system in accordance with the requirements of 26.3.2 should be referred to as *central station service*.

Central station alarm systems that comply with the Code offer the following seven important advantages over other types of alarm systems because of their unique requirements:

1. The central station operating company is required to obtain a listing by a testing laboratory acceptable to the authority having jurisdiction. Conducting laboratory tests of alarm systems and providing the results to many authorities having jurisdiction has inherent complexity. In the United States, the vast majority of the authorities having jurisdiction accept the alarm system laboratory testing and listing of either Underwriters Laboratories Inc. (UL) or FM Approvals (FM).
2. Tight control is required over the way a central station operating company provides service.
3. The central station operating company is required to indicate clearly that the installation complies with the Code.
4. The central station operating company is required to record signals received from a protected premises automatically.
5. The Code carefully states the procedures for handling various types of signals.
6. The Code spells out the way central station operating companies may use the various transmission technologies to receive signals from a protected premises.
7. Tight control is required over who conducts the testing and maintenance of the system.

System Design Tip

In examining each of these advantages, the design professional should recognize that the significant challenge to life safety, the high value of the property, the critical nature of the mission, the importance of preserving heritage, or the crucial necessity of protecting the environment drives these requirements. Although every protected property could benefit from having central station service, not every property needs this type of service. Thus owners normally purchase central station service only when the protection goals or the specific requirements of an authority having jurisdiction demand it.

To ensure the baseline level of quality for a central station alarm system, a testing laboratory acceptable to the authority having jurisdiction is required to list both the equipment and the operating company providing the service. (See the definition of the term *listed* in 3.2.5.)

From the outset, in 10.3.1, alarm system service providers are required to use only listed equipment. The listing process involves not only testing the equipment to make certain it performs properly but also inspecting the production of listed equipment to make certain the manufacturer has not changed the product after the laboratory tested it.

Listing can apply to a material or a service, which is important to note when considering the third distinct advantage of central station service. Testing laboratories rely on the requirements of the Code to guide their testing requirements. Both UL and FM testing laboratories have developed a performance standard for central station service — ANSI/UL 827, *Standard for Central-Station Alarm Services*, and FM Approval Standard 3011, *Central Station Service for Fire Alarms and Protective Equipment Supervision*. Representatives of the laboratory visit each central station operating company to review records of

signals and to audit the personnel performing operations and service. The representatives verify the construction of the physical central station and check the equipment and the power supplies.

Both UL and FM also provide a list of alarm service local companies. UL does so under the category "Protective Signaling Services–Local, Auxiliary, Remote Station, and Proprietary Protective Signaling Services (UUJS)." FM offers its list under the category "Fire Alarm Service Local Company (FIRE)."

UL publishes the results of the listing process annually in the *UL Fire Protection Equipment Directory*. FM publishes the results of its listing process annually in the FM Global *Approval Guide*. Public and private authorities having jurisdiction can use these publications to determine whether a central station operating company is listed.

26.3.3 Contract Requirements. The central station service elements shall be provided under contract to a subscriber by a prime contractor that has a listing for central station fire alarm services.

26.3.3.1 The prime contractor shall be responsible for code-compliant service delivery, regardless of any subcontracting arrangements involved in the delivery of service.

26.3.3.2 Signal monitoring, retransmission, and associated recordkeeping and reporting shall be provided by a company that has a listing for central station alarm services covering these elements.

The language pertaining to the four possible ways of receiving the necessary service elements for a central station service alarm system was removed from the 2016 edition. The Code requires, in performance-based language, that the prime contractor, having a listing for central station fire alarm services, provide the required elements to the subscriber. The *prime contractor* is defined in 3.3.209 as either a "listed central station or listed alarm service local company that is contractually responsible for providing central station services to a subscriber."

26.3.4* Indication of Central Station Service. The prime contractor shall conspicuously indicate that the alarm system providing service at a protected premises complies with all the requirements of this Code through the use of a systematic follow-up program under the control of the organization that has listed the prime contractor.

A.26.3.4 The terms *certificated* and *placarded*, which appeared in previous editions of *NFPA 72*, were considered by some to be too specific to two listing organizations and were replaced with more generic wording. The concept of providing documentation to indicate ongoing compliance of an installed system continues to be reflected by the current language.

There are two distinct services offered by organizations that list fire alarm service provided by prime contractors and central stations. The first is the listing of these alarm services, which requires the companies to demonstrate they have the knowledge and ability to install, test, service, and maintain central station alarm systems and/or monitor and appropriately retransmit on receipt of various signals from protected premises alarm systems.

The second part of the service provided by listing organizations is the certification of individual protected premises fire alarm systems to bring the alarm systems under their ongoing audit inspection program or systematic follow-up program. Under this program, systems are certified by the listing organization, and documentation of this is to be provided, posted, and handled as described in 26.3.4 through 26.3.4.8. The method used to document compliance with this portion of the program varies among listing organizations and includes the issuance of certificates, placards, or other documentation.

There is nothing in this Code that requires all protected premises alarm systems monitored by a listed central station to be tested, maintained, serviced, monitored, and responded to in

accordance with Section 26.3. This is often misunderstood by code users, owners, and AHJs, who think that merely specifying that these systems be monitored by a central station with a fire alarm listing gets them full central station service. Full compliance with central station alarm system requirements involves using alarm companies with fire alarm listings and having the listing organization certify the protected premises alarm system.

New explanatory language in A.26.3.4 describes what is meant when a fire alarm system and its alarm signal monitoring is classified as central station service. Central station service provides oversight, by various listing companies, of the companies providing the six elements listed in 26.3.2 through a review of their ability and knowledge relative to the work they perform. Additionally, listing companies can also provide certification of the individual fire alarm systems that may be in a building. Note that the listing companies do not conduct plan reviews of new systems; nor do they conduct final acceptance testing of systems. These are normally functions of the authority having jurisdiction. The listing companies typically will review existing installations for compliance with applicable codes in effect when the system was installed and will verify that the systems are being inspected, tested, and maintained according to the Code and manufacturer's published instructions.

Paragraph A.26.3.4 makes two important points. First, there is nothing in the Code, or in the model building, fire and life safety codes, that mandates that all fire alarm systems must meet the requirements of Section 26.3. Model codes typically state that when monitoring of systems is required it must be done by an approved supervising station. This means monitoring at a facility acceptable to the authority having jurisdiction using a level of service described in Sections 26.3, 26.4, or 26.5. Central station service, as described in in Section 26.3, is either an option that can be chosen by an owner, or in some locations, it can be a requirement of the authority having jurisdiction.

The second point is that simply using a central station for signal monitoring doesn't automatically mean that central station service is being provided for the supervising station fire alarm system. Where the applicable requirements in Section 26.3 are not provided and maintained, the level of service would be classified as a remote supervising station system (see 26.3.4.5), which contains its own specific requirements that would need to be met. See Section 26.5.

FAQ

Does having a systematic follow-up program mean that every central station alarm system will be inspected under the program provisions?

The requirement in 26.3.4 promotes and encourages installation, testing, and maintenance procedures that will help ensure the overall quality of the central station alarm system. To help ensure the inherent higher level of protection that a central station alarm system provides, 26.3.4 requires the prime contractor to indicate that the entire alarm system meets the requirements of the Code by using a systematic follow-up program under the control of the organization that listed the prime contractor.

The requirement is not that the organization providing the systematic follow-up service inspect every central station alarm system. Nor does it mean that when the organization providing the service does inspect a central station alarm system, it will inspect every aspect of that system. However, by providing a systematic follow-up program under the control of the organization that listed the prime contractor, the prime contractor makes provision for a potential additional level of oversight. Furthermore, the prime contractor must conspicuously post, within a 3 ft (1 m) distance of the main control unit, documentation issued by the listing organization. This indication that the installation complies with all the requirements of the Code helps promote a much more determined effort to implement the requirements of the Code than might otherwise occur. See 26.3.4.1 and 26.3.4.3.

The Code does not provide details of the process by which the listing organization provides follow-up service or issues the required documentation to the listed prime contractor. Rather, the Code leaves these details up to the procedures and practices of the listing organization.

Listing organizations do not conduct reviews of fire alarm system plans as a part of the listing process. Nor do they conduct acceptance testing or commissioning of systems. These functions are conducted by others, such as the local fire authority or an insurance carrier for the protected premises.

Exhibit 26.3 through Exhibit 26.5 illustrate typical documentation as issued by two organizations that list prime contractors providing central station service.

26.3.4.1* Documentation indicating Code compliance of the alarm system shall be issued by the organization that has listed the prime contractor.

N **A.26.3.4.1** The documentation in this section should not be confused with the documentation required in Chapter 7, which is typically provided by the alarm company and covers the design, acceptance, and completion of new systems. Instead the documentation in this section is provided by the listing organization and could be in the form of a certificate, placard, or other document used by the listing organization.

Paragraph A.26.3.4.1 was added to the 2019 edition of the Code to provide documentation clarification. Chapter 7 requires such minimum documentation as complete plans, specifications, and calculations for a new fire alarm system. These documents would be submitted to the authority having jurisdiction for review and approval. The prime contractor (see 3.3.209) for the installation provides documentation after the system has been successfully installed and tested. This documentation (see Exhibits 26.3, 26.4, and 26.5) would be in the form required by the listing organization and mounted as required by 26.3.4.3. It should not be confused with the record of completion, which is an additional documentation requirement in Chapter 7 that is not posted, but is maintained in a document cabinet or other approved storage location at the protected premises.

File No: **S25110** CCN: **UUFX**
Service Center No: **0**
Expires: **01/20/2016**
Issued: **01/20/2015**

CENTRAL STATION - FIRE
FIRE ALARM SYSTEM CERTIFICATE
(NFPA 72)

THIS CERTIFIES that the *Alarm Service Company* is included by UL LLC in its Directory as qualified to use the *UL Listing Mark* in connection with the certificated *Alarm System* This Certificate is the *Alarm Service Company*'s representation that the *Alarm System* including all connecting wiring and equipment has been installed and will be maintained in compliance with requirements established by UL This Certificate does not apply in any way to the installation of any additional signaling systems, such as; fire, smoke, waterflow, burglary, holdup, medical emergency, or otherwise, that may be connected to or installed along with the Certificated *Alarm System* This Certificate does not apply in any way to the communication channel between the protected property and any facility that monitors signals from the protected property unless the use of a UL listed or Classified Alarm Transport Company is specified on the Certificate

LIMITATION OF LIABILITY: UL LLC makes no representations or warranties, express or implied, that the Alarm System will in all cases prevent any loss by fire, smoke, water damage, burglary, hold-up or otherwise, or that the Alarm System will in all cases provide the protection for which it is installed or intended By the Alarm Service Company providing this Certificate and the Protected Property acceptance of this Certificate, the Alarm Service Company and the Protected Property acknowledge and agree that UL does not assume or undertake to discharge any liability of the Alarm Service Company or any other party UL is not an insurer and assumes no liability which may result directly or indirectly from inspection of the equipment, failure of the equipment, failure to conduct inspections, incorrect certification, nonconformity with requirements, failure to discover nonconformity with requirements, cancellation of the Certificate or withdrawal of the Alarm Service Company from inclusion in ULs Directory prior to the expiration date appearing on this Certificate

OPERATIONAL REQUIREMENTS: The *Alarm Service Company* bears the responsibility for the correctness of the installation; maintenance of the system documentation; periodic system inspection and testing; maintaining and providing any necessary repairs All operations and maintenance shall be conducted in the manner prescribed by the NFPA standard referenced All required service is to be provided for in an appropriate contract System documentation is defined to include any "As Built Drawings"; the records of any "Acceptance Testing"; and the records of all periodic system testing and maintenance

SYSTEM DESCRIPTION: This system is installed and operated in accordance with standard NFPA 72,2010 edition
Area Covered: Entire Building
Authority Having Jurisdiction: Northbrook Fire Department
Responding Fire Department: Northbrook Fire Department
SYSTEM DEVIATIONS FROM REFERENCED NFPA STANDARDS
none

Protected Property:
DEMONSTRATION ONE
100 PFINGSTEN RD
NORTHBROOK, IL 60062

Alarm Service Company:
UL INTERNAL SYSTEM TESTING (NAV2)
DUMMY ACCOUNT
333 PFINGSTEN RD1
NORTHBROOK IL 60062-2096

SN: FC57102357

EXHIBIT 26.3

Documentation for Central Station System: Fire Alarm System Certificate. (Source: © Underwriters Laboratories Inc., Northbrook, IL)

EXHIBIT 26.4

File No: **S25110** CCN: **UUFX**
Service Center No: **0**
Expires: **01/20/2016**
Issued: **01/20/2015**
Entry No: **5324593** Version: **7**

CENTRAL STATION - FIRE
FIRE ALARM SYSTEM CERTIFICATE DESCRIPTION
FOR Certificate Serial No: FC57102357

Protected Property:
DEMONSTRATION ONE
100 PFINGSTEN RD
NORTHBROOK, IL 60062

Alarm Service Company:
UL INTERNAL SYSTEM TESTING (NAV2)
DUMMY ACCOUNT
333 PFINGSTEN RD1
NORTHBROOK IL 60062-2096

Comments and Clarifications:
None
System Description:
Area Covered: Entire Building
Authority Having Jurisdiction: Northbrook Fire Department
Responding Fire Department: Northbrook Fire Department
Testing and Maintenance Contract date: 01/20/2015
SYSTEM DEVIATIONS FROM REFERENCED NFPA STANDARDS
none
Automatic Fire Detection and Alarm Service
Coverage is Total
7 - Smoke Detectors : 3 - Ionization 4 - Photoelectric
3 - Duct Smoke Detectors : 1 - Ionization 2 - Photoelectric
18 - Heat Detectors : 5 - ROR (Rate of temperature rise) 6 - Fixed Temperature 7 - Combination
Sprinkler System Waterflow Alarm and Supervisory Service
Sprinkler System Type: Combination Wet and Dry Pipe
3 - Waterflow Switches
4 - Sprinkler Valve Supervisory Services
1 - Water Pressure Device
1 - Water Temperature Device
1 - Water Level Device
1 - Room Temperature Device
1 - Fire Pump Power Device
1 - Fire Pump Running Device
2 - Air Pressure Devices
Manual Fire Alarm and Guard's Tour Supervisory Service
8 - Manual Fire Alarm Boxes
Alarm Notification and Annunciation Devices
24 - Audible/Visual Signals : Type - Strobe

File No: **S25110** CCN: **UUFX**
Service Center No: **0**
Expires: **01/20/2016**
Issued: **01/20/2015**
Entry No: **5324593** Version: **7**

CENTRAL STATION - FIRE
FIRE ALARM SYSTEM CERTIFICATE DESCRIPTION
FOR Certificate Serial No: FC57102357

Emergency Voice Alarm Service
2 - Voice/Alarm Channels
10 - Speakers
2 - Speaker Zones
Control and Transmitter Unit
ASD 357,JKL 404
Remote Monitoring
UL Listed Central Station
File: s25110, Service Center Number: 0
UL INTERNAL SYSTEM TESTING (NAV2)
DUMMY ACCOUNT
333 PFINGSTEN RD1
NORTHBROOK IL 60062-2096
Alarm Retransmission to Fire Department
Public Telephone Network and Public Telephone Network
Alarm Transmission Method: Data Network

Documentation for Central Station System: Fire Alarm System Certificate Description. (Source: © Underwriters Laboratories Inc., Northbrook, IL)

26.3.4.2 The documentation shall include, at a minimum, the following information:

(1) Name of the prime contractor involved with the ongoing Code compliance of the central station service
(2)* Full description of the alarm system as installed
(3) Issue and expiration dates of the documentation
(4) Name, address, and contact information of the organization issuing the document
(5) Identification of the authority(ies) having jurisdiction for the central station service installation

A.26.3.4.2(2) The record of completion *(see Chapter 10)* can be used to fulfill this requirement.

26.3.4.3 The documentation shall be physically posted within 3 ft (1 m) of the control unit, and copies of the documentation shall be made available to the authority(ies) having jurisdiction upon request.

26.3.4.4 A central repository of issued documentation, accessible to the authority having jurisdiction, shall be maintained by the organization that has listed the prime contractor.

26.3.4.5* Alarm system service that does not comply with all the requirements of Section 26.3 shall not be designated as central station service.

FIRE DEPARTMENT WILL RESPOND

TO ALARM SIGNALS UNLESS TELEPHONE NUMBER

_____

CALLED BEFORE TESTS OF THIS SYSTEM ARE MADE

ALARM SERVICE BY: _____

TELEPHONE NUMBER: _____

SUPERVISING (CENTRAL) STATION: _____

TELEPHONE NUMBER: _____

CENTRAL STATION SERVICE PLACARD
This fire protection signaling system installation, all equipment and wiring plus the maintenance, testing and supervision thereof are in accordance with the central station Approval requirements of FM Approval Standard No. 3011.

FM APPROVED

PLACARD IDENTIFICATION: _____
Site Information: Name: _____
Address: _____

EXPIRATION DATE: _____

PRIME CONTRACTOR:

EXHIBIT 26.5

Documentation for Central Station System: Placard. (Source: FM Global Property Loss Prevention Data Sheet 5-40, Fire Alarm Systems. © 2006 FM Global. Reprinted with permission. All rights reserved.)

A.26.3.4.5 It is the prime contractor's responsibility to remove all compliance markings (certification markings or placards) when a service contract goes into effect that conflicts in any way with the requirements of 26.3.4.

26.3.4.6* For the purpose of Section 26.3, the subscriber shall notify the prime contractor, in writing, of the identity of the authority(ies) having jurisdiction.

A.26.3.4.6 The prime contractor should be aware of statutes, public agency regulations, or certifications regarding alarm systems that might be binding on the subscriber. The prime contractor should identify for the subscriber which agencies could be an authority having jurisdiction and, if possible, advise the subscriber of any requirements or approvals being mandated by these agencies.

The subscriber has the responsibility for notifying the prime contractor of those private organizations that are being designated as an authority having jurisdiction. The subscriber also has the responsibility to notify the prime contractor of changes in the authority having jurisdiction, such as where there is a change in insurance companies. Although the

responsibility is primarily the subscriber's, the prime contractor should also take responsibility for seeking out these private authority(ies) having jurisdiction through the subscriber. The prime contractor is responsible for maintaining current records on the authority(ies) having jurisdiction for each protected premises.

The most prevalent public agency involved as an authority having jurisdiction with regard to alarm systems is the local fire department or fire prevention bureau. These are normally city or county agencies with statutory authority, and their approval of alarm system installations might be required. At the state level, the fire marshal's office is most likely to serve as the public regulatory agency.

The most prevalent private organizations involved as authorities having jurisdiction are insurance companies. Others include insurance rating bureaus, insurance brokers and agents, and private consultants. It is important to note that these organizations have no statutory authority and become authorities having jurisdiction only when designated by the subscriber.

With both public and private concerns to satisfy, it is not uncommon to find multiple authorities having jurisdiction involved with a particular protected premises. It is necessary to identify all authorities having jurisdiction in order to obtain all the necessary approvals for a central station alarm system installation.

The phrase "in writing" can include any form of correspondence that can be verified upon request, such as a letter, fax, email or other means of documented transfer of information from one entity to another.

The subscriber and the prime contractor must identify all of the authorities having jurisdiction involved at the protected premises. Although this responsibility rests primarily with the subscriber, the subscriber would normally know only the private authorities having jurisdiction. From experience gained by working in a particular jurisdiction, the prime contractor would most often know any additional public authorities having jurisdiction. Thus, a joint effort most effectively resolves this important requirement.

Δ **26.3.4.7** The authority(ies) having jurisdiction identified in 26.3.4.2(5) shall be notified within 30 calendar days of the expiration or cancellation by the organization that has listed the prime contractor.

This clarifies that the notification is required to occur within 30 calendar days.

26.3.4.8 The subscriber shall surrender expired or canceled documentation to the prime contractor within 30 days of the termination date.

Over the life of a central station system, a change might be made that results in the expiration or cancellation of contracted service. In turn, that expiration or cancellation would invalidate the designation "central station service." In such a case, the organization that listed the prime contractor must notify the authority having jurisdiction, as required in 26.3.4.7. Further, the subscriber must return the expired or cancelled documentation to the prime contractor within 30 days of the termination date per 26.3.4.8.

The authority having jurisdiction should ensure that only those systems meeting and maintaining all the Code requirements for central station service have this designation. Loss of classification of central station service does not necessarily mean that a fire alarm system will not function as designed. This depends on the reason(s) for cancelling the certificate or placard. The loss of the central station service classification may only mean that remote supervising station service is provided (if the applicable requirements of Section 26.5 are adhered to) or that supervising station monitoring is no longer provided where this is permitted by the codes within the jurisdiction.

26.3.5 Facilities.

26.3.5.1 The central station building or that portion of a building occupied by a central station shall conform to the construction, fire protection, restricted access, emergency lighting, and power facilities requirements of the latest edition of ANSI/UL 827, *Standard for Central-Station Alarm Services*.

ANSI/UL 827 details protection features that help to maintain the integrity and continuity of the physical central station. Paragraph 26.3.3 requires that a qualified testing laboratory acceptable to the authority having jurisdiction must list the central station and examine the protection features required by ANSI/UL 827 for compliance.

26.3.5.2 Subsidiary station buildings or those portions of buildings occupied by subsidiary stations shall conform to the construction, fire protection, restricted access, emergency lighting, and power facilities requirements of the latest edition of ANSI/UL 827, *Standard for Central-Station Alarm Services*.

The term *subsidiary station* is defined in 3.3.289 as a normally unattended facility located remotely from the central station and linked to the central station by a communications channel. A central station may receive signals from many subscribers in a particular geographic area through one or more subsidiary stations.

FAQ What do the requirements in 26.3.5.2 serve to ensure?

The requirements detailed in 26.3.5.2, and those that follow in 26.3.5.2.1 through 26.3.5.2.9, reflect the fact that, under normal operating conditions, no one staffs a subsidiary station. Usually, a subsidiary station serves a particular geographic area. The subsidiary station concentrates signals from many protected premises and transmits those concentrated signals to a supervising station. A malfunction at a subsidiary station can substantially impair the successful transmission of signals from the properties it serves. Thus, these requirements help ensure the overall operational reliability of the subsidiary station as well as the integrity of the transmission path between the subsidiary station and the supervising station.

26.3.5.2.1 All intrusion, fire, power, and environmental control systems for subsidiary station buildings shall be monitored by the central station in accordance with 26.3.5.

One way the central station staff manages the integrity of the subsidiary station is by monitoring certain critical building systems of the subsidiary station at the central station. This action helps to ensure the operational continuity of the subsidiary station.

Δ **26.3.5.2.2** The subsidiary facility shall be inspected at least monthly by central station personnel for the purpose of verifying the operation and condition of all supervised equipment, telephones, energy storage systems, batteries, and generators, in accordance with the manufacturer's published instructions.

The central station staff manages the integrity of the subsidiary station by inspecting it monthly. This thorough inspection verifies the continuity of the equipment, systems, and communications channels installed at the subsidiary station. Paragraph 26.3.5.2.2 has been revised for the 2019 edition of the Code to be less specific on how to test equipment covered by this section. Inspections must occur in accordance with the manufacturer's published instructions.

26.3.5.2.3 In the event of the failure of equipment at the subsidiary station or the communications channel to the central station, a backup shall be operational within 90 seconds.

26.3.5.2.4 With respect to 26.3.5.2.3, restoration of a failed unit shall be accomplished within 5 days.

The subsidiary station must have backup equipment by which, in the event of a failure, the central station is able to place into operation within 90 seconds. A technician must repair or replace defective equipment within 5 days.

26.3.5.2.5 Each communications channel shall be continuously supervised between the subsidiary station and the central station.

The equipment connected to each communications channel between the subsidiary station and the central station must monitor channel integrity continuously. In most cases, the equipment uses a form of continuous multiplex transmission technology. Today, many central stations communicate with their subsidiary stations using high-speed, large bandwidth data transmission equipment, such as T1 or T3 network technology.

Δ **26.3.5.2.6** When the communications channel between the subsidiary station and the supervising station fails, the communications shall be switched to an alternate path.

In addition to a highly reliable, primary communications channel, an alternate communications channel must provide redundancy in case of a failure to the primary channel. The central station may use "dial up, make good" service provided by a managed facilities-based network provider for the alternate communications channel. If the dedicated primary communications channel between the central station and the subsidiary station fails, "dial up, make good" service allows the central station to access a substitute communications channel using a basic voice telephone network. Use of this substitute communications channel provides an emergency communications path until technicians can restore the primary communications channel. The central station initiates the "dial up, make good" service to re-establish the data communications between the subsidiary station and the central station.

N **26.3.5.2.7** Managed facilities-based voice networks shall be used only to provide an alternate path between the subsidiary station and the supervising station.

This requirement was modified in two ways for the 2019 edition. First, the term *public switched telephone network* has been replaced by *managed facilities-based voice network* (*MFVN*) (see 3.3.161). Second, 26.3.5.2.7 is an example of changes made throughout the Code when multiple requirements were contained under a single paragraph. Paragraph 26.3.5.2.7 had been a second requirement in 26.3.5.2.6.

26.3.5.2.8 In the subsidiary station, there shall be a communications path, such as a cellular telephone, that is independent of the telephone cable between the subsidiary station and the serving wire center.

This requirement ensures that service personnel can establish communication with the central station upon arrival at a totally impaired subsidiary station.

26.3.5.2.9 A plan of action to provide for restoration of services specified by this Code shall exist for each subsidiary station.

(A) This plan shall provide for restoration of services within 4 hours of any impairment that causes loss of signals from the subsidiary station to the central station.

(B) An exercise to demonstrate the adequacy of the plan shall be conducted at least annually.

The central station must formulate a written plan for restoring service from a subsidiary station. This plan must encompass all services not already covered by 26.3.5.2.3. Such restoration must occur within 4 hours as required by 26.3.5.2.9(A). Commonly, the organization listing a central station that uses one or more subsidiary stations will review such a plan as a part of the listing process.

As with all emergency plans, the central station must test the plan's accuracy and validity. By performing the annual exercise as required by 26.3.5.2.9(B), the implementing personnel have an opportunity to become thoroughly familiar with the procedure. Such an exercise also helps keep the plan up-to-date and discloses changes at either the subsidiary station or the central station that may affect the plan's integrity.

26.3.6 Equipment.

26.3.6.1 The central station and all subsidiary stations shall be equipped so as to receive and record all signals in accordance with 26.6.6.

26.3.6.2 Circuit-adjusting means for emergency operation shall be permitted to be automatic or to be provided through manual operation upon receipt of a trouble signal.

Specially trained central station operators are permitted to operate circuit-adjusting means manually. (See 26.2.9 and 26.3.7 for personnel requirements.) Central station equipment may also automatically operate circuit-adjusting means.

26.3.6.3 Computer-aided alarm and supervisory signal–processing hardware and software shall be listed for the purpose.

Computer-aided alarm and supervisory signal–processing hardware and software must be listed for central station service. This requirement helps to ensure the operational integrity of the signal handling at the central station.

Modern central stations use software to process signals. Typically, a series of listed digital alarm communicator receivers (DACRs) connect to incoming telephone lines from the PSTN. In some cases, specially designed DACRs might connect to incoming data links to the Internet. These DACRs initially receive all signals from subscriber premises. A terminal data connection from each receiver using standard computer protocols transfers information concerning each incoming signal to redundant PC-based servers listed for central station service.

Specific listed software in the servers processes the information and displays it on workstations at each operator's desk. See Exhibit 26.2. The software provides display priority for various signals and provides detailed subscriber information, including the telephone numbers of the appropriate fire and police departments and the subscriber's representatives.

This arrangement of listed hardware and software significantly automates the processing of signals. It allows a smaller number of operators to handle a larger volume of signal traffic with a great deal of efficiency and effectiveness.

Some central stations that handle a large volume of signal traffic have invested in data management architecture that includes off-site redundant servers. This level of redundancy helps to ensure the continuity of operations during times of hardware or software failure or routine hardware or software maintenance.

26.3.6.4 Power supplies shall comply with the requirements of Chapter 10.

26.3.6.5 Transmission means shall comply with the requirements of Section 26.6.

26.3.6.6* Two independent means shall be provided to retransmit an alarm signal to the designated communications center.

A.26.3.6.6 Two telephone lines (numbers) at the central station connected to the public switched telephone network or a managed facilities-based voice network, each having its own telephone instrument connected, and two telephone lines (numbers) available at the communications center to which a central station operator can retransmit an alarm meet the intent of this requirement.

26.3.6.6.1 The use of a universal emergency number, such as the 911 public safety answering point, shall not meet the intent of this Code for the principal means of retransmission.

26.3.6.6.2 If the principal means of retransmission is not equipped to allow the communications center to acknowledge receipt of each alarm report, both means shall be used to retransmit.

26.3.6.6.3 The retransmission means shall be tested in accordance with Chapter 14.

26.3.6.6.4 The retransmission signal and the time and date of retransmission shall be recorded at the central station.

Subsection 26.3.2 lists the six elements of central station service, which includes retransmitting emergency signals to the appropriate communications center. The central station must have a reasonably secure means to retransmit signals.

FAQ What is the most common means of retransmitting emergency signals?

In most cases, the central station will use the PSTN to dial the 7-digit or 10-digit reporting number assigned to the communications center. Paragraph 26.3.6.6.1 states that the central station must not use 911 as the principal means of retransmission. This requirement exists for the following reasons:

1. The central station might not be in the same community as the protected premises and will have no way to dial 911 for a different geographical area.
2. A public service answering point (PSAP) staffed with civilian personnel who are not a part of the public emergency responders answer most 911 and enhanced 911 emergency telephone calls.
3. The majority of 911 calls concern nonfire emergencies.

Complying with this requirement helps to avoid the bottleneck that sometimes occurs at the PSAP.

Paragraph 26.3.6.6.4 requires the central station to record the actual telephone call to the communications center. This recording, along with records of signals received at the central station, often helps investigators reconstruct the sequence of events. The central station is not mandated to record the time and date automatically. However, when computer automation systems manage the receipt and processing of signals, including the retransmission signal, the central station can and should automatically record the time and date of the retransmission.

26.3.7 Personnel.

26.3.7.1 The central station shall have not less than two qualified operators on duty at the central station at all times to ensure disposition of signals in accordance with the requirements of 26.3.8.3.

26.3.7.2 Operation and supervision shall be the primary functions of the operators, and no other interest or activity shall take precedence over the protective service.

Paragraph 26.3.7.1 requires that the central station have two qualified operators on duty at all times. The presence of two operators maximizes the likelihood that at least one operator will be fully alert to receive and process incoming signals at all times. The operators are required to have no other duties that would distract them from the prompt, effective handling of signals.

Realistically, the volume of signal traffic determines the number of operators on duty. Innovations in communications technology have eliminated the need for the location of the central station to match the proximity of the subscribers. Today, a single central station can serve tens of thousands of subscribers. The organizations that list the central station keep a careful watch on the ratio of operators to signal traffic for prompt handling of emergency signals.

N 26.3.8 Procedures.

Several revisions have been made to the 2019 edition of the Code related to central (Section 26.3), proprietary (Section 26.4), and remote (Section 26.5) supervising station systems. The revisions better align the requirements in each section, which should assist users of the Code in comparing the requirements associated with each level of supervising service.

N **26.3.8.1** The procedural requirements outlined in Section 26.2 shall be followed.

First and foremost, central stations must address signals in accordance with the general requirements of Section 26.2. This section includes alarm signal disposition (26.2.1), fire alarm signal verification (26.2.2), alarm signal content (26.2.3), and CO signal disposition (26.2.4). Paragraph 26.3.8.2 indicates that compliance is also required for the additional requirements of 26.3.8.

N **26.3.8.2** The additional procedural requirements outlined in 26.3.8 shall also be followed.

26.3.8.3 Disposition of Signals.

26.3.8.3.1 Alarm Signals. The central station shall perform the following actions:

(1)* Retransmit the alarm to the communications center in accordance with 26.2.1 unless the signal is a result of a prearranged test.
(2) Dispatch a runner or technician to the protected premises to arrive within 2 hours after receipt of an alarm signal if equipment needs to be manually reset by the prime contractor. Except where prohibited by the authority having jurisdiction, the runner or technician shall be permitted to be recalled prior to arrival at the premises if a qualified representative of the subscriber at the premises can provide the necessary resetting of the equipment and is able to place the system back in operating condition.
(3) Immediately notify the subscriber unless the signal is a result of a prearranged test.
(4) Provide notice to the subscriber or authority having jurisdiction, or both, if required.

A.26.3.8.3.1(1) Nothing in this section is intended to prevent communication with the subscriber in less than 15 minutes from the receipt of the signal.

The central station operators should perform the actions required in 26.3.8.3.1 in the order they appear. This order reflects intended levels of urgency and the priority of activities.

A central station must give highest priority to the prompt handling and retransmission of fire alarm signals. Under the most adverse circumstances — for example, where a digital alarm communicator transmitter (DACT) takes the maximum number of permitted attempts before it connects with the

central station — it may have taken up to 15 minutes to complete the transmission of a signal from the protected premises to the central station. See 26.6.4.1.3(B) and 26.6.4.1.3(C).

The operator is permitted to verify whether an alarm signal coming from the protected premises is a real emergency in accordance with 26.2.2 before retransmitting the signal. This verification process is permitted to take 90 seconds, which is in addition to the time permitted to retransmit the signal to the communications center.

The runner or technician in 26.3.8.3.1(2) needs to respond only when the prime contractor must manually reset equipment at the protected premises. For some central station alarm systems, the authority having jurisdiction may permit the subscriber or some other trained individual (such as the responding fire department personnel) to reset the equipment. In such a case, the prime contractor would not need to reset the system, and a runner would not need to respond. The presence of recurring alarms at a facility should illustrate the need for more than just the resetting of the system by the subscriber or other personnel. In this case, the authority having jurisdiction should request that a technician be called to the scene to determine the cause of the unwanted recurring alarm signals.

To comply with 26.3.8.3.1(3), the central station will usually notify the subscriber by means of a phone call. In most cases, this constitutes the quickest available method of notification.

The word *notice,* in the context of 26.3.8.3.1(4), means "written notice." *In writing* is defined in 3.3.139 as correspondence that is formatted as a letter or document that can be verified on request. Additional annex text further describes examples of the intent of the definition. The subscriber can use such notice to document system operations, as required by 7.7.1. The authority having jurisdiction can use the notice to help document the response to system operations at the location.

•

26.3.8.3.2 Guard's Tour Supervisory Signal.

26.3.8.3.2.1 Upon failure to receive a guard's tour supervisory signal within a 15-minute maximum grace period, the central station shall perform the following actions:

(1) Communicate without unreasonable delay with personnel at the protected premises
(2) Dispatch a runner to the protected premises to arrive within 30 minutes of the delinquency if communications cannot be established
(3) Report all delinquencies to the subscriber or authority having jurisdiction, or both, if required

In 26.3.8.3.2.1(2), if the central station cannot promptly contact personnel at the protected premises, then a runner should be dispatched to investigate why the guard missed a signal. Once dispatched, the runner must arrive at the protected premises within 30 minutes, which means the runner may arrive 45 minutes after the guard missed the signal. Even so, in actual cases, a responding runner has found the guard injured or ill and, by summoning medical assistance, has saved the guard's life.

26.3.8.3.2.2 Failure of the guard to follow a prescribed route in transmitting signals shall be handled as a delinquency.

Supervision of the guard's tour by a central station mandates a compulsory tour arrangement. The central station can provide this service by monitoring every reporting station along a route or only a few of the stations along a route. If monitoring only a few stations, the guard would have to operate each station in the route sequentially, including those that do not transmit signals. Typically, the stations will not operate unless the guard has first operated the previous station in the route. But in either case, the guard must follow a prescribed route, proceeding from station to station in a fixed sequence. A delinquency is incurred if the guard fails to follow the prescribed route.

Central station operating companies report that very few contracts to provide guard's tour service remain in effect. In those cases where a heightened level of oversight of guard's tours seems prudent, central station guard's tour supervision provides such a heightened level.

Δ **26.3.8.3.3* Supervisory Signals.** Upon receipt of a supervisory signal that is not prearranged, the central station shall perform the following actions:

(1)* Communicate immediately with the persons designated by the subscriber and notify the fire department, law enforcement agency, or both when required by the authority having jurisdiction

(2) Dispatch a runner or maintenance person to arrive within 2 hours to investigate unless the supervisory signal is cleared in accordance with a scheduled procedure determined by 26.3.8.3.3(1)

(3) Notify the authority having jurisdiction and the subscriber when sprinkler systems or other fire suppression systems or equipment have been wholly or partially out of service for 8 hours

(4) When service has been restored, provide notice to the subscriber and the authority having jurisdiction of the nature of the signal, the time of occurrence, and the restoration of service when equipment has been out of service for 8 hours or more

A.26.3.8.3.3 It is anticipated that the central station will first attempt to notify designated personnel at the protected premises. When such notification cannot be made, it might be appropriate to notify law enforcement or the fire department, or both. For example, if a valve supervisory signal is received where protected premises are not occupied, it is appropriate to notify the police.

A.26.3.8.3.3(1) The term immediately in this context is intended to mean "without unreasonable delay." Routine handling should take a maximum of 4 minutes from receipt of a supervisory signal by the central station until the initiation of communications with a person(s) designated by the subscriber.

Items (3) and (4) of 26.3.8.3.3 require that the subscriber and the authority having jurisdiction be notified when equipment is out of service for 8 hours or more, and then again when service has been restored.

Supervisory signals may indicate that something or someone has impaired a vital protection system, so the central station must handle supervisory signals promptly and accurately. Central station supervisory service can materially assist the owner, occupants, or management of a facility in overseeing the operational readiness of automatic fire extinguishing or suppression systems. The service can also help oversee the operation of critical premises emergency control (fire safety) functions.

FAQ What is the typical course of action on receipt of a supervisory signal?

A runner or a technician needs to respond only when the central station operator cannot resolve restoration of the supervisory signal to normal by contacting designated personnel as required by 26.3.8.3.3(1). Typically, on receipt of a supervisory signal, a central station operator will phone the premises. If there is no answer, then the operator will phone the individuals on a calling list provided by the subscriber. If the operator cannot reach someone on the calling list who will promptly respond to investigate and resolve the supervisory off-normal signal, then the operator must dispatch a runner. When dispatched, the runner must arrive at the protected premises within 2 hours.

26.3.8.3.4 Trouble Signals. Upon receipt of trouble signals or other signals pertaining solely to matters of equipment maintenance of the alarm systems, the central station shall perform the following actions:

(1)* If a received trouble signal does not restore within 15 minutes, communicate immediately with persons designated by the subscriber
(2) Dispatch personnel to arrive within 4 hours to initiate maintenance, if necessary
(3) When the interruption is more than 8 hours, provide notice to the subscriber and the fire department if so required by the authority having jurisdiction as to the nature of the interruption, the time of occurrence, and the restoration of service

A.26.3.8.3.4(1) The term immediately in this context is intended to mean "without unreasonable delay." Routine handling should take a maximum of 4 minutes from receipt of a trouble signal by the central station until initiation of the investigation by telephone.

The central station must handle trouble signals promptly and accurately. Trouble signals indicate that the alarm system, the transmitter, or the communications path is wholly or partly out of service. The central station operator plays a key role in the initial troubleshooting of a system outage. The degree to which the operator has received training to properly interpret the exact nature of the trouble signal can materially assist in getting the system back in service as quickly as possible.

The personnel, dispatched to arrive within 4 hours, must initiate repairs. This requirement generally means that a technician, rather than a runner, must respond. It is expected that the responding technician will have the necessary tools, test equipment, and spare parts to make the needed repairs as quickly as possible. Those training the technicians must place emphasis on the time-critical nature of this type of troubleshooting and repair activity. It is expected that the technician will make every effort to minimize the length of the impairment to the fire alarm system.

New for the 2019 edition of the Code, a 15-minute period has been included in 26.3.8.3.4(1) that permits the central station to delay reporting a trouble signal to the person(s) designated by the subscriber. This grace period allows time for momentary or short outages of primary power supplies and communications networks (such as IP) to self-restore. As a result, unnecessary nuisance notifications, with near immediate retractions, can be reduced. This delay, and others up to as long as 60 minutes, has been a common practice in communications centers for some time.

26.3.8.3.5 Test Signals.

26.3.8.3.5.1 All test signals received shall be recorded to indicate date, time, and type.

26.3.8.3.5.2 Test signals initiated by the subscriber, including those for the benefit of an authority having jurisdiction, shall be acknowledged by central station personnel whenever the subscriber or authority inquires.

26.3.8.3.5.3* Any test signal not received by the central station shall be investigated immediately, and action shall be taken to reestablish system integrity.

A.26.3.8.3.5.3 The term immediately in this context is intended to mean "without unreasonable delay." Routine handling should take a maximum of 4 minutes from receipt of a trouble signal by the central station until initiation of the investigation by telephone.

The central station must handle test signals immediately; it is recommended doing so within 4 minutes. Test signals help to ensure that the alarm system continues to function properly. The central station must cooperate with any authority having jurisdiction that inquires regarding test signals. If a subscriber initiates a test signal, then calls the central station and determines that the central station did not receive the signal, the central station should treat this occurrence as a trouble signal and follow

the procedures outlined in 26.3.8.3.4. The central station should dispatch a service technician to arrive within 4 hours to begin repairs.

26.3.8.3.5.4 The central station shall dispatch personnel to arrive within 2 hours if protected premises equipment needs to be manually reset after testing.

26.3.8.3.5.5 The prime contractor shall provide each of its representatives and each alarm system user with a unique personal identification code.

26.3.8.3.5.6 In order to authorize the placing of an alarm system into test status, a representative of the prime contractor or an alarm system user shall first provide the central station with his or her personal identification code.

The prime contractor issues each of its representatives and each alarm system user a unique personal identification code (see 26.3.8.3.5.5) and requires its use (see 26.3.8.3.5.6) to control those who may place the system into a test mode.

Some systems permit the central station representative or alarm system user to enter the personal identification code on a keypad at the protected premises. Other systems require the individual to provide the personal identification code by using a phone to dial a special number and then enter the code on the phone's touch-tone keypad. Still other systems require that the code be given verbally to a central station operator in a phone call to the central station.

This requirement helps to maintain the security and operational integrity of the alarm system. Without this precaution, the central station has no way of verifying that the person placing the alarm system into test status has authorization to do so.

26.3.9 Record Keeping and Reporting.

26.3.9.1 Complete records of all signals received shall be retained for at least 1 year.

26.3.9.2 Testing and maintenance records shall be retained as required by 14.6.3.

26.3.9.3 The central station shall make arrangements to furnish reports of signals received to the authority having jurisdiction in a manner approved by the authority having jurisdiction.

It is important for the central station to keep accurate and complete records of signals received. See the requirements of 7.7.1, Section 14.6, and 14.6.3 for information on retaining testing and maintenance records.

Whenever an authority having jurisdiction requests reports from a central station, the central station must provide the reports in a useful and usable form. In many cases, authorities having jurisdiction can use information from central station records to reconstruct events leading up to and following an emergency or other incident.

FAQ How are the reports of signals received commonly used?

When a fire occurs, the record of signals received at the central station assists investigators tremendously. The date-stamped and time-stamped automatic record of signals received at the central station helps investigators develop a step-by-step sequence of events for the fire. Investigators can piece together the direction of fire and smoke travel based on patterns described by which initiating devices operated at which particular points in the fire development timeline. Sometimes the control unit at the protected premises has a memory that records system functions and operations in an accessible log. A technician can access this log by means of a laptop or tablet. Comparing the record from the control unit at the protected premises with the record of signals received at the central station can further clarify details regarding the fire development.

An authority having jurisdiction may also want to receive a report from the central station to verify the frequency and duration of impairments to supervised fire extinguishing or fire suppression systems at a protected premises. In addition, an authority having jurisdiction may want to receive a report to verify operational aspects of the central station service at a specific protected premises.

A central station must respond to the request for a report from an authority having jurisdiction. Failure to provide such a report in a timely fashion can result in an authority having jurisdiction withdrawing the approval of the service provided by the delinquent central station.

26.3.10 Testing and Maintenance. Testing and maintenance for central station service shall be performed in accordance with Chapter 14.

26.4 Proprietary Supervising Station Alarm Systems.

26.4.1 Application.

The management of a facility protected by a proprietary supervising station alarm system often uses that system to oversee the built-in fire extinguishing or fire suppression systems at that facility. The proprietary supervising station alarm system may also oversee certain facility emergency control (fire safety) functions. Used as a management tool, the proprietary alarm system can help to ensure that these fire protection systems and functions remain in service. See Exhibit 26.6 for an example of a proprietary supervising station.

N **26.4.1.1** Supervising facilities of proprietary alarm systems shall comply with the operating procedures of Section 26.4.

N **26.4.1.2** The facilities, equipment, personnel, operation, testing, and maintenance of the proprietary supervising station shall also comply with Section 26.4.

26.4.2 General.

26.4.2.1 Proprietary supervising stations shall be operated by trained, competent personnel in constant attendance who are responsible to the owner of the protected property.

EXHIBIT 26.6

Proprietary Supervising Station. (Source: Dallas/Fort Worth International Airport)

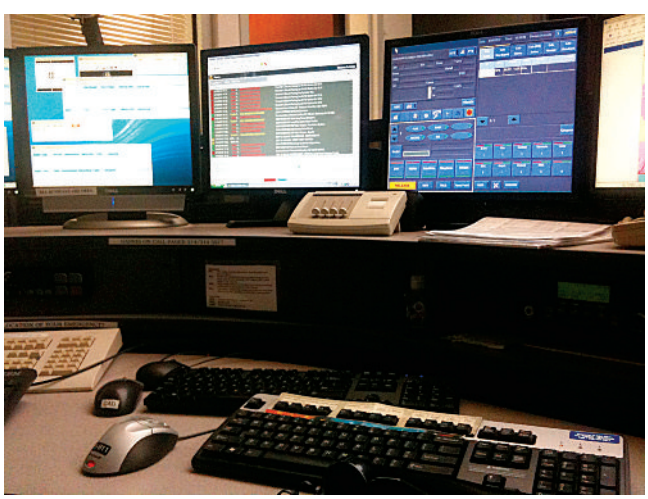

26.4.2.2 The protected property shall be either a contiguous property or noncontiguous properties under one ownership.

From a single proprietary supervising station, an owner can oversee the protection features at one or more properties. The properties might contiguously occupy a single piece of land or might occupy noncontiguous portions of land (see 3.3.213 for definitions of the terms *contiguous property* and *noncontiguous property*). The geographic distance that exists between noncontiguous properties is unlimited. This permits an owner to oversee protection features at geographically diverse locations from a single proprietary supervising station.

26.4.2.3 If a protected premises control unit is integral to or colocated with the supervising station equipment, the requirements of Section 26.6 shall not apply.

In some cases, the proprietary alarm system may have a *master fire alarm control unit*, as defined in 3.3.108.1, colocated in the proprietary supervising station (see Figure A.26.1.1). Where this situation occurs, the transmission technology requirements described in Section 26.6 do not apply. Rather, the system would use initiating device circuits and signaling line circuits, as described in Chapter 23, to transmit signals to the master FACU colocated in the proprietary supervising station. Section 26.4 provides the requirements for all other aspects of such a proprietary alarm system.

26.4.3 Facilities.

26.4.3.1* The proprietary supervising station shall be located in either of the following:

(1) Fire-resistive, detached building
(2) A fire-resistive room protected from the hazardous parts of the building

A.26.4.3.1 Consideration should be given to providing the following features for a proprietary supervising station location:

(1) Fire resistive construction meeting the requirements of adopted building codes

FAQ

What does the Code intend by the descriptions "fire-resistive, detached building" and "fire-resistive room"?

The requirements of 26.4.3.1 help to maintain a high degree of physical integrity for the proprietary supervising station. A "fire-resistive, detached building" describes a building constructed of materials that meet the adopted building code's designation for "fire-resistive construction." Most model building codes include different levels of fire-resistive construction based on hourly ratings. Paragraph 26.4.3.1 does not specify a minimum level of fire-resistive construction. The Code defers to other codes such as NFPA *101*, *NFPA 5000®*, *Building Construction and Safety Code®*, or other applicable building codes. This construction, in conjunction with sufficient detachment, should protect the building from any hazardous processes or hazardous areas of the facility.

In some cases, situating the proprietary supervising station in a segregated area in a fire-resistive guardhouse at the entrance to the property would provide a location sufficiently detached from facility hazards. In selecting this location, the owner of the facility would have to provide protection against any damage that a runaway vehicle might cause. Surrounding the guardhouse with strong concrete barriers in the direction of vehicle traffic could provide appropriate protection. Similarly, the owner could house the proprietary supervision station in a "fire-resistive room" protected by the nature of its construction from any hazardous processes or hazardous areas of the facility. The hourly rating(s) of a fire-resistive

room's separation walls and ceiling is not stated in the Code; nor does a requirement exist in the model building or life safety codes. It should be assumed that a minimum 1-hour rating would apply, but a risk analysis might determine that 2, 3, or 4 hours may be more appropriate.

(2) Air handling systems isolated from common building systems

As a useful guide for determining the nature of the design and integrity necessary to achieve proper protection, the proprietary supervising station building or that portion of a building occupied by a proprietary supervising station should compare the construction, fire protection, restricted access, emergency lighting, and power facilities to the requirements stated in the latest edition of ANSI/UL 827, *Standard for Central-Station Alarm Services*.

It is recommended that the building or room housing the proprietary supervising station have a separate air handling system isolated from common building systems. This can help protect the proprietary supervising station from the incursion of smoke and heat during a fire in the other portions of the facility. ANSI/UL 827 can be a useful tool when designing proprietary supervising station stand-alone buildings and facilities in buildings that house other occupancies and operations.

26.4.3.2 Access to the proprietary supervising station shall be restricted to those persons directly concerned with the implementation and direction of emergency action and procedure.

The proprietary supervising station must not become a congregating place for guards, emergency response team members, or other facility personnel. The presence of such persons could interfere with the operators and distract them from giving proper attention to signal traffic. If management locates the proprietary supervising station in a guardhouse where guards admit vehicles and personnel to the premises, some means of segregation should be provided to separate the operators of the proprietary supervising station from other incidental employees. Such segregation will help operators effectively and efficiently handle the signal traffic without distraction.

26.4.3.3 The proprietary supervising station, as well as remotely located power rooms for batteries or engine-driven generators, shall be provided with portable fire extinguishers that comply with the requirements of NFPA 10.

Personnel in a proprietary supervising station must have the means to handle a small fire in the supervising station or in the power rooms for batteries or engine-driven generators. See NFPA 10, *Standard for Portable Fire Extinguishers*. Management should also refer to the requirements of NFPA 600, *Standard on Facility Fire Brigades*. These requirements ensure that management properly organizes and trains personnel to use the fire extinguishers provided safely.

26.4.3.4 The emergency lighting system shall comply with the requirements of 26.4.3.4.1 through 26.4.3.4.3.

26.4.3.4.1 The proprietary supervising station shall be provided with an automatic emergency lighting system.

26.4.3.4.2 The emergency source shall be independent of the primary lighting source.

26.4.3.4.3 In the event of a loss of the primary lighting for the supervising station, the emergency lighting system shall provide illumination for a period of not less than 26 hours to permit the operators to carry on operations and shall be tested in accordance with the requirements of Chapter 14.

Δ **26.4.3.5** If 25 or more protected buildings or premises are connected to a subsidiary station, both of the following shall be provided at the subsidiary station:

(1) Automatic means for receiving and recording signals
(2) A telephone

The term *subsidiary station* is defined in 3.3.289 as a normally unattended facility located remotely from a proprietary supervising station and linked to the proprietary supervising station by a communications channel. A proprietary supervising station may receive signals from many buildings over very large premises or from several noncontiguous premises through one or more subsidiary stations. Where 25 or more protected buildings or protected premises transmit through a subsidiary station, management must equip that subsidiary station so that it includes a means for automatically receiving and recording signals. See Exhibit 26.7 for an illustration of a proprietary supervisory station that uses subsidiary stations.

26.4.3.6* Retransmission Means. The means of retransmission shall be accepted by the authority having jurisdiction and shall be in accordance with 26.3.6.6, 26.5.4.4, or Chapter 27.

EXHIBIT 26.7

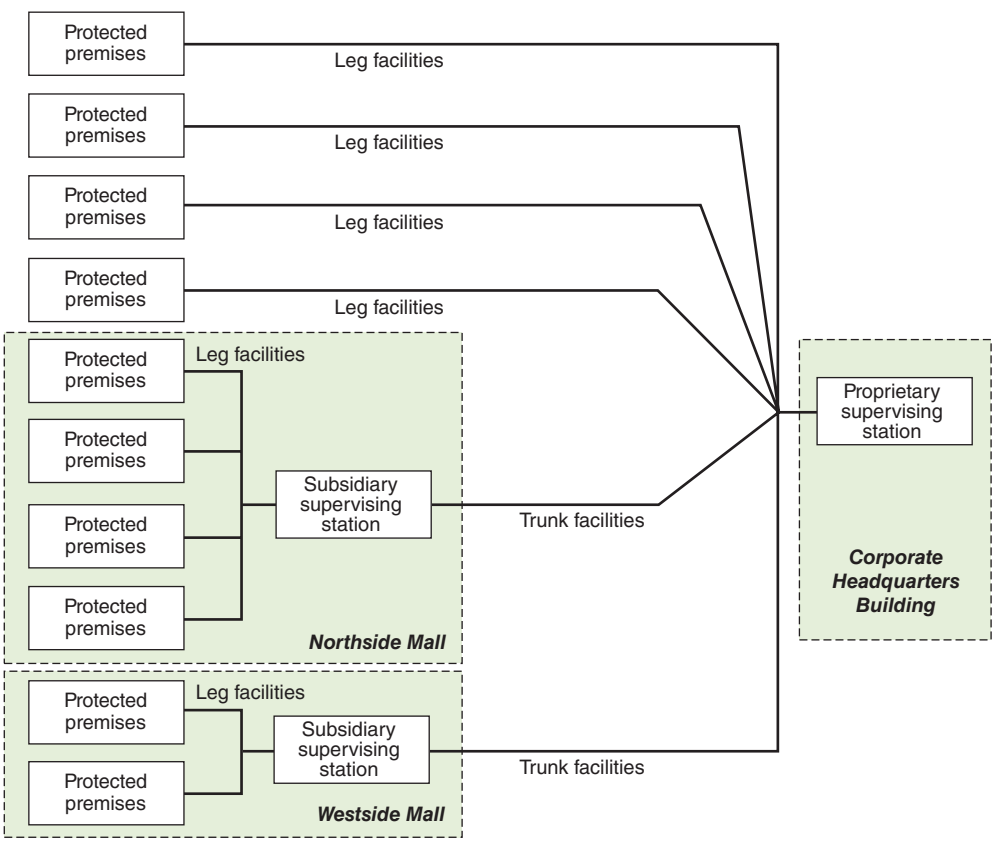

Diagram of Proprietary Supervising Station Facility with Noncontiguous Properties Under Single Ownership Connecting Through Subsidiary Supervising Stations. (Source: Dean K. Wilson, P.E., Erie, PA)

A.26.4.3.6 It is the intent of this Code that the operator within the proprietary supervising station should have a secure means of immediately retransmitting any signal indicative of a fire to the public fire department communications center. Automatic retransmission using an approved method installed in accordance with Sections 26.3 through 26.5, and Chapter 27 is the best method for proper retransmission. However, a manual means can be permitted to be used, consisting of either a manual connection following the requirements of Section 26.3, Section 26.5, and Chapter 27, or, for proprietary supervising stations serving only contiguous properties, a means in the form of a municipal fire alarm box installed within 50 ft (15.2 m) of the proprietary supervising station in accordance with Chapter 27 can be permitted.

26.4.4 Equipment.

26.4.4.1 Signal-Receiving Equipment.

26.4.4.1.1 Signal-receiving equipment in a proprietary supervising station shall comply with 26.4.4.

26.4.4.1.2 Provision shall be made to designate the building in which a signal originates.

26.4.4.1.3* The floor, section, or other subdivision of the building in which a signal originates shall be designated at the proprietary supervising station or at the building that is protected where required by the authority having jurisdiction.

N **A.26.4.4.1.3** Depending on a building's size and configuration, specific location information received by the proprietary supervising station could be warranted. This information could assist responding individuals by allowing them to respond directly to areas of the building where signals have been initiated. An example of a building where this might be beneficial might be a multi-floor building or one with a large building footprint. Signals from smaller buildings, such as a fast food restaurant or a gas station convenience store, would likely only need to be general in nature. It should be noted that this section does not specifically call for point identification, but the specific device location information provided by such a system would meet the requirements of the section.

> To manage the built-in fire protection features of the protected premises effectively, the signals received by the proprietary supervising station must contain sufficient detail to allow operators to locate the source of the signals quickly and accurately. Graphic annunciators, video displays, and addressable systems installed at the protected premises will meet this requirement. If the nature of the protected property eliminates the need for such detail, the authority having jurisdiction may waive the requirement.

26.4.4.1.4 Designation, as required by 26.4.4.1.2 and 26.4.4.1.3, shall use private-mode notification appliances approved by the authority having jurisdiction.

26.4.4.2 Signal-Alerting Equipment.

26.4.4.2.1 The proprietary supervising station shall have, in addition to a recording device, two different means for alerting the operator when each signal is received that indicates a change of state of any connected initiating device circuit.

> Two means of alerting the operators of the receipt of a signal is required. This requirement relates to 26.4.5.7, which requires operators to have no other duties that would impair their ability to process signals from the proprietary supervising station alarm system. The two means of notification help make certain the operators properly attend to the incoming signals.

26.4.4.2.1.1 One of these means shall be an audible signal, which shall persist until manually acknowledged.

26.4.4.2.1.2 Means shall include the receipt of alarm, supervisory, and trouble signals, including signals indicating restoration.

26.4.4.2.1.3 If means is provided in the proprietary supervising station to identify the type of signal received, a common audible indicating appliance shall be permitted to be used for alarm, supervisory, and trouble indication.

Subsection 26.6.6 and Section 10.10 require distinctive signals for alarm, supervisory, and trouble signals. Paragraph 26.4.4.2.1.3 correlates with 10.10.4 to permit a common audible notification appliance in the supervising station, as long as other means readily identify the type of signal.

26.4.4.2.1.4 At a proprietary supervising station, an audible trouble signal shall be permitted to be silenced, provided that the act of silencing does not prevent the signal from operating immediately upon receipt of a subsequent trouble signal.

26.4.4.2.2 All signals required to be received by the proprietary supervising station that show a change in status shall be automatically and permanently recorded, including time and date of occurrence, in a form that expedites operator interpretation in accordance with any one of the means detailed in 26.4.4.2.2.1 through 26.4.4.2.2.4.

26.4.4.2.2.1 If a visual display is used that automatically provides change of status information for each required signal, including type and location of occurrence, any form of automatic permanent visual record shall be permitted.

(A) The recorded information shall include the content described in 26.4.4.2.2.
(B) The visual display shall show status information content at all times and be distinctly different after the operator has manually acknowledged each signal.
(C) Acknowledgment shall produce recorded information indicating the time and date of acknowledgment.

Paragraph 26.4.4.2.2.1 describes an annunciator that continuously shows the status of every point in the system that generates a signal. At a glance, the operator can see the status of every point. With this type of visual display, the proprietary supervising station system may use any type of permanent visual record. Such systems most often use a logging-type printer, which keeps a running list of signals received as a backup to the visual display. Although the printed information might not be formatted to allow an operator to find information easily, it does provide a running summary of signals as they occur with respect to the date and time each signal was received.

26.4.4.2.2.2 If a visual display is not provided, required signal content information shall be automatically recorded on duplicate, permanent visual recording instruments.

FAQ What is required when a visual display is not provided?

When the proprietary supervising station system is not provided with a visual display, such a system must employ two printers. Where a proprietary supervising station receives signals from systems other than an alarm system, these printers will assist the operators in giving priority to signals from the alarm system. One printer will record all signals that the system receives, and the other will record only alarm, supervisory, and trouble signals. Both printers must format the output to allow the operator to easily read, interpret, and act on the information provided.

26.4.4.2.2.3 One recording instrument shall be used for recording all incoming signals, while the other shall be used for required alarm, supervisory, and trouble signals only.

(A) Failure to acknowledge a signal shall not prevent subsequent signals from recording.
(B) Restoration of the signal to its prior condition shall be recorded.

26.4.4.2.2.4 In the event that a system combines the use of a sequential visual display and recorded permanent visual presentation, the required signal content information shall be displayed and recorded.

(A) The visual information component shall be retained either on the display until manually acknowledged or repeated at intervals not greater than 5 seconds, for durations of 2 seconds each, until manually acknowledged.
(B) Each new displayed status change shall be accompanied by an audible indication that persists until manual acknowledgment of the signal is performed.

26.4.4.3* Redisplay of Status. A means shall be provided for the operator to redisplay the status of required signal-initiating inputs that have been acknowledged but not yet restored.

A.26.4.4.3 Proprietary station procedures should include periodic review of nonrestored signals. One method for such a review could be by the use of equipment that would automatically redisplay the information.

This requirement applies to a visual display unit that presents one or more lines of information at a time but does not simultaneously display the status of all points covered by the proprietary supervising station system. The operator must scroll through the display after having acknowledged each signal. To help the operator give proper precedence to alarm signals, either the signals must appear on a separate display or the system must give them priority status on a common display. The system must still provide a permanent visual record, but the type of printer is not specified. Such a system most often uses a logging-type printer, as described in the commentary following 26.4.4.2.2.1(C).

When operators use a system that visually displays a limited number of signals at one time, they must not forget about signals that await restoration. In the flurry of activity surrounding subsequent incoming signals, an operator could lose track of previously received signals that indicated an off-normal status change. Such signals must restore to normal to indicate that the off-normal condition has been resolved. As discussed in A.26.4.4.3, an operational procedure can prompt operators to scroll periodically through the list of signals, or the system itself can cause the redisplay of nonrestored signals.

26.4.4.3.1 If the system retains the signal on the visual display until manually acknowledged, subsequent recorded presentations shall not be inhibited upon failure to acknowledge.

26.4.4.3.2 Alarm signals shall be segregated on a separate visual display in this configuration unless they are given priority status on the common visual display.

26.4.4.4 Display Rate. To facilitate the prompt receipt of alarm signals from systems handling other types of signals that are able to produce multiple simultaneous status changes, the requirements of either of the following shall be met:

(1) Record simultaneous status changes at a rate not slower than either a quantity of 50 or 10 percent of the total number of initiating device circuits connected, within 90 seconds, whichever number is smaller, without loss of any signal
(2) Display or record alarm signals at a rate not slower than one every 10 seconds, regardless of the rate or number of status changes occurring, without loss of any signals

These requirements help to ensure the prompt receipt of alarm signals when a proprietary supervising station system receives other types of signals and uses technology that permits the processing and display of multiple status changes at once. Paragraph 26.4.4.4 substitutes for and takes precedence over the general requirements for all communications methods in 26.6.2.4. This paragraph also applies similar requirements to other transmission technologies where a proprietary supervising station alarm system uses those technologies.

26.4.4.5 Trouble Signals. Trouble signals and their restoration shall be automatically indicated and recorded at the proprietary supervising station.

The requirements of 10.15.1 and 10.15.8 directly relate to the requirement in 26.4.4.5. The proprietary supervising station alarm system must indicate trouble signals and their restoration to normal both audibly and visibly at the proprietary supervising station within 200 seconds.

26.4.4.5.1 The recorded information for the occurrence of any trouble condition of signaling line circuit, leg facility, or trunk facility that prevents receipt of alarm signals at the proprietary supervising station shall be such that the operator is able to determine the presence of the trouble condition.

26.4.4.5.2 Trouble conditions in a leg facility shall not affect or delay receipt of signals at the proprietary supervising station from other leg facilities on the same trunk facility.

This requirement mandates that the transmission technology preserves the signals from other leg facilities (see 3.3.148) when one leg facility experiences trouble. Management of a facility proposing to install a proprietary supervising station alarm system would have to analyze each proposed transmission technology to determine if it could meet the requirements of 26.4.4.5.2. For example, in the past if management had chosen to use an active multiplex transmission technology, compliance with the requirement of 26.4.4.5.2 would have dictated that the system meet the requirements for what was then called a Type 1 or Type 2 active multiplex system. (Active multiplex is considered a legacy technology that must follow the requirements for performance-based communications technologies.) Both of these technologies used a closed window bridge that effectively isolated each leg facility on a trunk from each other. A Type 3 active multiplex system could not have met this requirement because it used an open window bridge in which all the leg facilities on a trunk were subject to potential failure from a fault on a single leg.

26.4.5 Personnel.

26.4.5.1 Except as permitted in 26.4.5.2, the proprietary supervising station shall be staffed at all times by a minimum of two qualified operators.

N **26.4.5.2** Where the means for transmitting alarms to the communications center is automatic, the proprietary supervising station shall be permitted to be staffed by a minimum of one qualified operator at all times.

N **26.4.5.3** Where the proprietary supervising station is staffed by two qualified operators, one of the operators shall be permitted to be a runner.

The allowance provided by 26.4.5.2 does not relieve other requirements, such as those of 26.4.6.1.6 concerning the dispatch of personnel to the protected premises.

26.4.5.4 When the runner is not in attendance at the proprietary supervising station, the runner shall establish two-way communications with the station at intervals not exceeding 15 minutes, unless otherwise permitted by 26.4.5.5.

26.4.5.5 Where two or more operators are on duty in the supervising station, a runner physically in attendance at a noncontiguous protected premises and immediately available via telephone or other approved means of communication shall not be required to maintain two-way communications at 15-minute intervals if that runner is not responsible for another protected premises.

Paragraph 26.4.5.4 recognizes that facility management may have stationed a trained runner at a noncontiguous protected premises. For example, management may have stationed a runner at the reception desk of another facility it owns that is not on the same property as the one implied in 26.4.5.3. Where the runner has principal responsibility only for the noncontiguous premises to which he or she is assigned and remains immediately available by some reliable means of communications, the requirement to establish two-way communications at 15-minute intervals serves no purpose. In addition, where a facility consists of multiple noncontiguous properties, frequent communications between each stationed runner and the operators at the proprietary supervising station could hinder either the runner or the operators from performing duties that are more important.

26.4.5.6 The primary duties of the operator(s) shall be to monitor signals, operate the system, and take such action as shall be required by the authority having jurisdiction.

26.4.5.7 The operator(s) shall not be assigned any additional duties that would take precedence over the primary duties.

FAQ Does 26.4.5.7 prohibit operators from performing other duties?

Although the operators are not prohibited from performing other duties as noted in 26.4.5.7, it is expected that the operators have no duties that would distract them from the primary duties stated in 26.4.5.6.

26.4.6 Operations.

Several revisions have been made to the 2019 edition of the Code to central (Section 26.3), proprietary (Section 26.4), and remote (Section 26.5) supervising station systems. These revisions better align the requirements in each section, which should assist users of the Code in comparing the requirements associated with each level of supervising service.

N **26.4.6.1 Procedures.**

N **26.4.6.1.1** The procedural requirements outlined in Section 26.2 shall be followed.

N **26.4.6.1.2** The additional procedural requirements outlined in 26.4.6.1 shall also be followed.

26.4.6.1.3 Communications and Transmission Channels.

26.4.6.1.3.1 All communications and transmission channels used to receive signals between the proprietary supervising station and the protected premises control unit shall be operated manually or automatically once every 24 hours to verify operation.

26.4.6.1.3.2 If a communications or transmission channel fails to operate, the operator shall immediately notify the person(s) identified by the owner or authority having jurisdiction.

26.4.6.1.3.3* Coded Retransmission. Retransmission by coded signals shall be confirmed by two-way voice communications indicating the nature of the alarm.

A.26.4.6.1.3.3 Regardless of the type of retransmission facility used, telephone communications between the proprietary supervising station and the fire department should be available at all times and should not depend on a switchboard operator.

Paragraph 26.4.3.6 requires that the proprietary supervising station retransmit signals to the communications center by means of one of the following:

1. An automatic or manual connection using a connection to a central station alarm system
2. An automatic or manual connection using a connection to a remote supervising station alarm system
3. An automatic or manual connection to a public emergency alarm reporting system

In the third case, the retransmission from a proprietary supervising station system serving a contiguous property could consist of the operator manually actuating a municipal alarm box. The retransmission could also consist of an auxiliary alarm system that meets the requirements of 27.6.3.2.

Paragraph 26.4.6.1.3.3 requires two-way voice confirmation of a coded retransmission signal. This confirmation would most likely occur when an operator at the supervising station contacts the communications center by phone.

Although 26.4.3.6 does not require an operator at the proprietary supervising station to use a phone as the sole means to report an alarm signal to the communications center, Paragraph 26.4.6.1.3.3 does require the availability of a phone.

Management should provide the proprietary supervising station with a direct connection to the network that completely bypasses any private branch exchange (PBX), whether that PBX uses manual or automatic switching. This direct connection to the PSTN will allow operators in the proprietary supervising station to make a phone call even if the PBX fails.

26.4.6.1.4 Operator Controls.

26.4.6.1.4.1 All operator controls at the proprietary supervising station(s) designated by the authority having jurisdiction shall be operated at each change of shift.

26.4.6.1.4.2 If operator controls fail, the operator shall immediately notify the person(s) identified by the owner or authority having jurisdiction.

The requirements of 26.4.6.1.4 help to ensure the proper and continued operational readiness of the proprietary supervising station.

26.4.6.1.5 Retransmission. Indication of a fire shall be immediately retransmitted to the communications center or other locations accepted by the authority having jurisdiction, indicating the building or group of buildings from which the alarm has been received.

26.4.6.1.6 Dispositions of Signals.

26.4.6.1.6.1 Alarms. Upon receipt of an alarm signal, the proprietary supervising station operator shall initiate action to perform the following:

(1) Notify the communications center, the emergency response team, and such other parties as the authority having jurisdiction requires in accordance with 26.2.1

For consistency with other chapter requirements, 26.4.6.1.6.1(1) requires that alarm signals be reported to the communications center and not the fire department, which may or may not be one and the same.

(2) Dispatch a runner or technician to the alarm location to arrive within 2 hours after receipt of a signal
(3) Restore the system as soon as possible after disposition of the cause of the alarm signal

26.4.6.1.6.2 Guard's Tour Supervisory Signal. If a guard's tour supervisory signal is not received from a guard within a 15-minute maximum grace period, or if a guard fails to follow a prescribed route in transmitting the signals (where a prescribed route has been established), the proprietary supervising station operator shall initiate action to perform the following:

(1) Communicate at once with the protected areas or premises by telephone, radio, calling back over the system circuit, or other means accepted by the authority having jurisdiction
(2) Dispatch a runner to arrive within 30 minutes to investigate the delinquency if communications with the guard cannot be immediately established

26.4.6.1.6.3 Supervisory Signals. Upon receipt of sprinkler system and other supervisory signals, the proprietary supervising station operator shall initiate action to perform the following, if required:

(1) Communicate immediately with the designated person(s) to ascertain the reason for the signal
(2) Dispatch personnel to arrive within 2 hours to investigate, unless supervisory conditions are immediately restored
(3) Notify the fire department if required by the authority having jurisdiction
(4) Notify the authority having jurisdiction when sprinkler systems are wholly or partially out of service for 8 hours or more
(5)* Provide written notice to the authority having jurisdiction as to the nature of the signal, time of occurrence, and restoration of service when equipment has been out of service for 8 hours or more

A.26.4.6.1.6.3(5) The phrase "written notice" can include any form of correspondence that can be verified upon request, such as a letter, fax, email or other means of documented transfer of information from one entity to another.

26.4.6.1.6.4 Trouble Signals. Upon receipt of trouble signals or other signals pertaining solely to matters of equipment maintenance of the alarm system, the proprietary supervising station operator shall initiate action to perform the following, if required:

(1) Communicate immediately with the designated person(s) to ascertain reason for the signal
(2) Dispatch personnel to arrive within 4 hours to initiate maintenance, if necessary
(3) Notify the fire department if required by the authority having jurisdiction
(4) Notify the authority having jurisdiction when interruption of service exists for 4 hours or more
(5) When equipment has been out of service for 8 hours or more, provide written notice to the authority having jurisdiction as to the nature of the signal, time of occurrence, and restoration of service

FAQ

What are the notable differences in the requirements for the disposition of signals between a central station and a proprietary station?

The requirements in 26.4.6.1.6.1 through 26.4.6.1.6.4 are similar to those in 26.3.8.3 for central station alarm systems, except for the following notable differences:

1. On receipt of an alarm signal, the proprietary supervising station must always dispatch a runner.
2. If required by the authority having jurisdiction, the proprietary supervising station must notify the fire department on receipt of a supervisory signal or a trouble signal. This notification will alert the fire department to impaired protection.
3. The proprietary supervising station must notify the authority having jurisdiction if an interruption to service producing a trouble signal persists for 4 hours.

26.4.7 Record Keeping and Reporting.

26.4.7.1 Complete records of all signals received shall be retained for at least 1 year.

26.4.7.2 Testing and maintenance records shall be retained as required by 14.6.3.

26.4.7.3 The proprietary supervising station shall make arrangements to furnish reports of signals received to the authority having jurisdiction in a manner approved by the authority having jurisdiction.

Whenever an authority having jurisdiction requests reports from a proprietary supervising station, the supervising station must provide the reports in a useful and usable form. This paragraph provides the authority having jurisdiction with a specific requirement to cite should a property owner refuse to disclose information regarding signals received at the proprietary supervising station.

26.4.8 Testing and Maintenance. Testing and maintenance of proprietary alarm systems shall be performed in accordance with Chapter 14.

26.5 Remote Supervising Station Alarm Systems.

26.5.1 Application and General.

26.5.1.1 Section 26.5 shall apply where central station service is neither required nor elected.

An authority having jurisdiction may permit a remote supervising station alarm system where the desired level of protection does not warrant the level of protection offered by a central station alarm system. Similarly, if the facility management determines it does not need the level of protection offered by a central station alarm system or a proprietary supervising station alarm system, it may choose to connect to a remote supervising station alarm system.

Remote supervising station systems have evolved considerably since they were first introduced. See the accompanying Closer Look feature for some historical context.

26.5.1.2 The installation, maintenance, testing, and use of a remote supervising station alarm system that serves properties under various ownership from a remote supervising station shall comply with the requirements of Section 26.5.

Some authorities having jurisdiction have interpreted this paragraph to mean that the requirements of Section 26.5 apply only to those cases where a remote supervising station system serves properties under various ownerships. In so doing, those authorities having jurisdiction have not accepted the use of hardware and software listed for use in providing a remote station supervising station system at a single facility under one ownership. Instead, those authorities having jurisdiction have required the facility to use hardware and software listed for a proprietary supervising station system.

Closer Look

The Evolution of Remote Supervising Stations

When the requirements for a remote supervising station alarm system first appeared in the Code in 1961, they provided a means of transmitting alarm, supervisory, and trouble signals from a somewhat remote protected premises to the nearest communications center. In most of those cases, the municipality did not have a public emergency alarm reporting system. Due to the limitations of the transmission technologies employed at that time, no vendor could provide central station service to such a remote facility.

Sometimes the municipality did not have a constantly attended communications center. Rather, officials relied on a multiple-location emergency telephone system. When an individual placed a telephone call to the seven-digit emergency reporting number, telephones rang in several locations throughout the community. These locations included local businesses as well as the homes of the fire chief and other fire officers. A switch at each telephone could actuate sirens throughout the community or transmit signals to radio receivers or pagers that would summon volunteer fire fighters. (Even today, some less built-up areas use this method to handle public reports of an emergency.)

In such communities, officials had to find an alternative location to receive signals from remote supervising station alarm systems. Often, officials chose a local 24-hour telephone answering service — normally used by doctors, dentists, and people from other trades — to receive the remote supervising station alarm signals. In some cases, the officials chose a gasoline service station or local restaurant that remained open around the clock to receive the signals.

Some alarm system installers who chose not to provide listed central station service set up monitoring centers to receive remote supervising station alarm signals. In turn, some listed central station operating companies began to provide equipment in their central stations that would meet the requirements for remote supervising station alarm systems to receive such signals.

In certain areas of the country, municipal monitoring of signals is very prevalent. A factor that is looked at as a benefit when municipal monitoring is used is that the status of all monitored alarm systems is always known by the fire department through its communications center. This allows the fire prevention bureau to follow up more quickly on systems that are not in a normal condition. Much like the benefits of central supervising station service, system owners can be notified of the need to have their systems serviced and returned to a system normal condition. Another benefit, often cited for having the fire department or communications center acting as the remote station, is the receipt of alarm signals at the same location that will be dispatching the fire apparatus, thus eliminating the time necessary to carry out the alarm retransmission process. Some municipalities have partnered to create regional emergency communications centers to dispatch fire, police, and emergency medical services. Some centers also monitor signals transmitted from protected premises in the jurisdictions for which they dispatch. These centers use equipment capable of receiving signals from remote supervising station alarm system transmitters located at the protected premises. Similar to how central station service runners are required to be dispatched to address certain signals that need to be cleared, often it is a fire apparatus, usually in a non-emergency mode, or a member of the fire prevention bureau that is dispatched to determine the reason for received signals other than alarm signals.

Paragraph 26.5.1.2 does not specifically forbid the application of the requirements in Section 26.5 to a remote station supervising station alarm system serving single or multiple facilities under one ownership. At the same time, the requirements in 26.5.1.4 clarify that alarm, supervisory, and trouble signals must transmit to a location remote from the protected premises.

In analyzing whether a particular type of supervising station system will serve a facility appropriately, the authorities having jurisdiction should carefully examine the protection goals of the owner as

well as the protection goals for the jurisdictions they represent. NFPA *101* and other model building and fire codes permit monitoring by the requirements of Sections 26.3, 26.4, or 26.5. The monitoring method that is used should be based on the protection goals identified.

Exhibit 26.8 illustrates a communications center equipped to receive signals as a remote supervising station in accordance with 26.5.3.1.1.

26.5.1.3 Remote supervising station physical facilities, equipment, operating personnel, response, retransmission, signals, reports, and testing shall comply with the minimum requirements of Section 26.5.

26.5.1.4 Remote supervising station alarm systems shall provide an automatic audible and visible indication of alarm, supervisory, and trouble conditions at a location remote from the protected premises.

This requirement ensures that supervisory and trouble conditions displayed on the FACU that connects to a remote supervising station will not go undetected. For example, assume that a FACU is installed in an electrical room in a remote portion of a warehouse facility and that an incident occurs involving the loss of the alarm system's primary power supply. Typically, the alarm system's secondary power will be exhausted within 24 hours, and the alarm system would be rendered inoperative. The trouble signal, as well as the alarm and supervisory signals, are required be annunciated via audible and visual signals at a remote location staffed with personnel expected to take appropriate actions based on the signal type.

Δ **26.5.1.5** Audible or visual notification appliances at the protected premises shall comply with 26.5.1.5.1 and 26.5.1.5.2.

N **26.5.1.5.1** Audible or visual notification appliances shall not be required other than those required at the remote supervising station.

N **26.5.1.5.2** Where audible or visual appliances are provided at the protected premises, the alarm signals, circuits, and controls shall comply with the provisions of Chapter 18 and Chapter 23 in addition to the provisions of Section 26.5.

EXHIBIT 26.8

Public Emergency Services Communications Center Equipped to Receive Signals as Remote Supervising Station. (Source: Courtesy of Northwest Central Dispatch System, Arlington Heights, IL)

Paragraphs 26.5.1.5, 26.5.1.5.1, and 26.5.1.5.2 are examples of changes made to the 2019 edition of the Code to provide no more than one requirement per code section as is required in NFPA's *Manual of Style*. The requirements of 26.5.1.5.1 and 26.5.1.5.2 had been grouped in a single paragraph (26.5.1.5) in previous editions. Separating the requirements into their own section numbers makes this section easier to apply.

Chapter 26 does not address specific requirements for evacuation notification at the protected premises. Chapters 18 and 23 address these requirements.

When property protection, mission continuity, heritage preservation, or environmental protection has been chosen as the predominant protection goal for a facility, the owner of the protected premises might install an alarm system that does not itself provide evacuation notification to the occupants. NFPA *101* and other model building and fire codes do not always require that occupant notification be provided where an FACU is installed at the protected premises. For example, where a dedicated function FACU is installed simply to monitor devices that, when activated, would signal the need for Elevator Phase I Emergency Recall Operation or Elevator Power Shutdown — or, where an FACU is only monitoring a waterflow device(s) — no requirement exists for occupant notification.

On occasion, some authorities having jurisdiction insisted that audible and visual notification appliances are required at the protected premises for such systems; see the commentary and the System Design Tip following A.1.2.4. Paragraph 26.5.1.5.1 clarifies that it does not mandate notification appliances at a protected premises. Refer to Section 23.3 for the requirement to document the features required for a protected premises fire alarm system.

26.5.1.6 The loading capacities of the remote supervising station equipment for any approved method of transmission shall be as designated in Section 26.6.

Remote station fire alarm systems have the full range of transmission technologies available. However, those technologies must meet the requirements of Section 26.6.

26.5.2 Indication of Remote Station Service.

N **26.5.2.1** Owners utilizing remote station alarm systems shall provide annual documentation to the authority having jurisdiction identifying the party responsible for the inspection, testing, and maintenance requirements of Chapter 14.

N **26.5.2.2** The documentation required by 26.5.2.1 shall take one of the following forms:

(1)* Affidavit attesting to the responsibilities and qualifications of the parties performing the inspection, testing, and maintenance and accepting responsibility of compliance with Chapter 14 and signed by a representative of the service provider
(2) Documentation indicating code compliance of the remote station alarm system issued by the organization that listed the service provider
(3) Other documentation acceptable to the authority having jurisdiction

A.26.5.2.2(1) Chapter 14 permits the building owner or his designated representative to perform these services if they are qualified. In this situation, the documentation could be a declaration of qualification signed by the building owner. Multiple service providers are permitted.

The requirements in 26.5.2 help ensure the integrity of the remote supervising station alarm system throughout its life cycle. Every year, the owner of the protected premises must provide written documentation to the authority having jurisdiction that identifies the person or organization responsible for the inspection, testing, and maintenance of the remote supervising station system. The requirements in this subsection offer the following three alternatives:

1. An affidavit attesting to the competency of the person or organization performing the services and signed by a representative of the service provider
2. A document from the organization that listed the service provider
3. Another form of documentation acceptable to the authority having jurisdiction

The second option permissively supports the listing of protective signaling service companies by the testing laboratories. Such listing includes specific follow-up procedures by the laboratories similar to those described in 26.3.4 for central station service.

26.5.3* Facilities.

A.26.5.3 As a minimum, the room or rooms containing the remote supervising station equipment should have a 1-hour fire rating, and the entire structure should be protected by an alarm system complying with Chapter 23.

As a useful guide for determining the nature of the design and integrity necessary to achieve proper protection, the remote supervising station building or that portion of a building occupied by a remote supervising station should compare the construction, fire protection, restricted access, emergency lighting, and power facilities to the requirements stated in the latest edition of ANSI/UL 827, *Standard for Central-Station Alarm Services*.

If the remote supervising station is located within an emergency response agency (ERA), the ERA should consider meeting the requirements of Chapter 4 of NFPA 1221.

26.5.3.1 Alarm systems utilizing remote supervising station connections shall transmit alarm and supervisory signals to a facility meeting the requirements of 26.5.3.1.1, 26.5.3.1.2, 26.5.3.1.3, or 26.5.3.1.4.

Some authorities having jurisdiction have interpreted 26.5.3.1 as requiring that both alarm and supervisory signals must transmit to a single facility that meets the requirements of 26.5.3.1.1, 26.5.3.1.2, 26.5.3.1.3, or 26.5.3.1.4. Those paragraphs offer four general categories of suitable locations for the remote supervising station. The language of 26.5.3.1 requires the transmission of alarm and supervisory signals to "a" facility meeting one of the four options listed. It does not require transmission to the same facility. Different types of signals may be sent to different facilities. For example, alarm signals could be transmitted directly to the communications center, while supervisory and other signals could go to another monitoring facility when the communications center chooses not to receive the other signals.

Note that 26.5.1.4 requires the transmission of alarm, supervisory, and trouble signals to a location remote from the protected premises. The argument could be made that having all the signals transmit to the same remote supervising station gives the operators a better understanding of what may be occurring at a facility.

26.5.3.1.1 Alarm, supervisory, and trouble signals shall be permitted to be received at a communications center that complies with the requirements of NFPA 1221.

26.5.3.1.2 Alarm, supervisory, and trouble signals shall be permitted to be received at the fire station or at the governmental agency that has public responsibility for taking prescribed action to ensure response upon receipt of an alarm signal.

26.5.3.1.3 Where permitted by the authority having jurisdiction, alarm, supervisory, and trouble signals shall be permitted to be received at a listed central supervising station.

This clarifies that a listed central station can provide remote station service with the approval of the authority having jurisdiction.

26.5.3.1.4* Where permitted by the authority having jurisdiction, alarm, supervisory, and trouble signals shall be permitted to be received at an alternate location approved by the authority having jurisdiction.

A.26.5.3.1.4 A listed central station might be considered an acceptable alternate location for receipt of fire alarm, supervisory, and trouble signals.

FAQ Can a listed central station also provide remote supervising station service?

Accepting the use of a listed central station to receive such signals would constitute remote supervising station service but not central station service. In such a case, the equipment at the protected premises and at the central station must meet the requirements for remote supervising station alarm systems. According to the requirements of 10.3.1, the equipment must be specifically listed for use as part of a remote supervising station alarm system.

Δ **26.5.3.2*** Trouble signals shall be permitted to be received at locations in accordance with 26.5.3.2.1 and 26.5.3.2.2.

A.26.5.3.2 A listed central station might be considered an acceptable alternate location for receipt of trouble signals.

N **26.5.3.2.1** Trouble signals shall be permitted to be received at an approved location that has personnel on duty who are trained to recognize the type of signal received and to take prescribed action.

N **26.5.3.2.2** Trouble signals shall be permitted to be received at an approved location other than that which receives alarm and supervisory signals.

26.5.3.3 If locations other than the communications center are used for the receipt of signals, access to receiving equipment shall be restricted in accordance with the requirements of the authority having jurisdiction.

This requirement helps to ensure the security and operational integrity of the remote supervising station receiving equipment installed at locations other than the public communications center. NFPA 1221 covers the requirements for access to and security of the communications center. Refer to the definition of the term *communications center* in 3.3.57.

26.5.4 Equipment.

26.5.4.1 Signal-receiving equipment shall indicate receipt of each signal both audibly and visibly.

26.5.4.1.1 Audible signals shall meet the requirements of Chapter 18 for the private operating mode.

The requirements for private mode audible signaling are in 18.4.5.

26.5.4.1.2 Means for silencing alarm, supervisory, and trouble signals shall be provided and shall be arranged so that subsequent signals shall re-sound.

Silencing one signal must not prevent a subsequent signal from causing the audible notification appliance to sound. This reinforces the requirements in Sections 10.12, 10.13, 10.14.7, and 10.15.10.

26.5.4.1.3 A trouble signal shall be received when the system or any portion of the system at the protected premises is placed in a bypass or test mode.

This requirement prevents the use of any so-called "silent disconnect switch" at the protected premises. A facility might use such a switch to prevent the transmission of signals to the remote supervising station during maintenance on the alarm system or on a fire protection system connected to the alarm system. However, the operation of any disconnect switch must produce a trouble signal at the remote supervising station.

26.5.4.1.4 An audible and visible indication shall be provided upon restoration of the system after receipt of any signal.

The Code does not permit the indication of the remote supervising station system restoration to normal by the mere extinguishment of a lamp. The audible notification appliance at the remote supervising station must also sound. The extinguishing of a lamp or other visual indicator, such as a light-emitting diode (LED), could still give the visual indication.

Some large remote supervising station systems allow operators to mark the illuminated visual indicators manually, usually with a circular plastic "donut." When the audible appliance signals a change in status, the operator can look at all the marked visual indicators and quickly determine which one has been extinguished, thus indicating a restoration to normal. Note that the requirements of 26.6.6.5(2) still apply and require each change of state to be recorded. Refer also to 26.5.8.3 and the associated commentary.

26.5.4.1.5 If visible means are provided in the remote supervising station to identify the type of signal received, a common audible notification appliance shall be permitted to be used.

26.5.4.2 Power supplies shall comply with the requirements of Chapter 10.

26.5.4.3 Transmission means shall comply with the requirements of Section 26.6.

Remote station fire alarm systems have the full range of transmission technologies given in Section 26.6, as long as they also meet any special requirements of Section 26.5.

Δ **26.5.4.4** Retransmission of an alarm signal, if required, shall be by one of the following methods, which appear in descending order of preference as follows:

(1) A dedicated circuit that is independent of any switched telephone network and is capable of voice or data communications
(2) A one-way (outgoing only) telephone at the remote supervising station that utilizes a managed facilities-based voice network and is used primarily for voice transmission of alarms to a telephone at the communications center that cannot be used for outgoing calls
(3) A private radio system using the fire department frequency, where permitted by the fire department
(4) Other methods accepted by the authority having jurisdiction

FAQ When is retransmission of an alarm signal not required?

The requirements of 26.5.4.4 must correlate with the requirements of 26.5.6.3. If the remote supervising station alarm system signals transmit from the protected premises to the communications center, and

that center serves as the remote supervising station, then retransmission of the alarm signals will not be necessary. Retransmission of alarm signals will become necessary only when a location other than the communications center serves as the remote supervising station.

When retransmission becomes necessary, the vast majority of remote supervising stations will use a retransmission method that complies with the requirements of 26.5.4.4(2). Special programming at the public telephone utility switch will block incoming phone calls to the number assigned to the retransmission telephone. This arrangement allows operators at the remote supervising station to make outgoing calls on this telephone line (number), but not to receive incoming calls. This prevents the line (number) from being tied up by incoming calls.

Other methods, as permitted by 26.5.4.4(4), may include one in which the information requiring retransmission is electronically sent from the supervising station to the communications center.

26.5.5 Personnel.

26.5.5.1 The remote supervising station shall have not less than two qualified operators on duty at the remote supervising station at all times to ensure disposition of signals in accordance with the requirements of 26.5.6.

26.5.5.2 Duties pertaining to other than operation of the remote supervising station receiving and transmitting equipment shall be permitted, subject to the approval of the authority having jurisdiction.

The authority having jurisdiction may permit operators at the remote supervising station to perform duties not related to the system operation. However, the extent to which those other duties may interfere with proper signal handling must be considered.

26.5.6 Procedures.

Δ **26.5.6.1** The procedural requirements outlined in Section 26.2 shall be followed.

Several revisions have been made to the 2019 edition of the Code to central (Section 26.3), proprietary (Section 26.4), and remote (Section 26.5) supervising station systems. These revisions better align the requirements in each section, which should assist users of the Code in comparing the requirements associated with each level of supervising service.

26.5.6.2 The additional procedural requirements outlined in 26.5.6 shall also be followed.

N **26.5.6.3 Disposition of Signals.**

N **26.5.6.3.1 Alarm Signals.** The remote station shall perform the following actions:

(1) If the remote station is at a location other than the communications center, retransmit alarm signals to the communications center in accordance with 26.2.1.
(2) Immediately notify the owner or the owner's designated representative.

N **26.5.6.3.2 Supervisory Signals.** Upon receipt of a supervisory signal that is not prearranged, the remote station shall perform the following actions:

(1) Immediately notify the owner or the owner's designated representative.
(2) Where required, notify the authority having jurisdiction.

N **26.5.6.3.3 Trouble Signals.**

N **26.5.6.3.3.1** Upon receipt of a trouble signal that is not prearranged, the remote station shall perform the following action:

(1) Immediately notify the owner or the owner's designated representative.
(2) Where required, notify the authority having jurisdiction.

When any remote supervising station receives a signal, the operator is required to contact designated representatives promptly to help ensure that the owner of the protected premises will take appropriate action as soon as possible. In addition, for supervisory and trouble signals, the authority having jurisdiction must be contacted if required by the enforcing jurisdiction.

N **26.5.6.3.3.2** For trouble signals, the remote station operator shall be permitted to delay transmission for 15 minutes to allow for a status change in the signal that would resolve the trouble signal.

New for the 2019 edition of the Code, a 15-minute period has been included in 26.5.6.3.3.2 that permits the remote station to delay reporting a trouble signal to the person(s) designated by the subscriber or the authority having jurisdiction when they require notification of a trouble signal. This grace period allows time for momentary or short outages of primary power supplies and communications networks (such as IP) to self-restore. As a result, unnecessary nuisance notifications, with near immediate retractions, can be reduced. This delay, and others up to as long as 60 minutes, has been in a common practice in communications centers for some time.

N **26.5.6.3.3.3** If a trouble restoral signal is received within 15 minutes, the operator shall not be required to notify the owner or the owner's designated representative or the authority having jurisdiction.

26.5.7 Operations. All operator controls at the remote supervising station shall be operated at the beginning of each shift or change in personnel, and the status of all alarm, supervisory, and trouble signals shall be noted and recorded.

This paragraph provides for the operational continuity of the remote supervising station. By exercising operating controls at shift change or when on-duty personnel changes, operators can more quickly identify potential failures of equipment and initiate action to summon a technician to make necessary repairs.

Operators are required to note and record the status of alarm, supervisory, and trouble signals. The record helps ensure continuity of the handling of those signals, which is particularly important when a signal that indicates a supervisory off-normal condition or a trouble condition persists across a change in personnel. Operators going off-shift can brief incoming operators about action taken and what responding actions they anticipate because of it.

26.5.8 Record Keeping and Reporting.

26.5.8.1 A permanent record of the time, date, and location of all signals and restorations received and the action taken shall be maintained for at least 1 year and shall be able to be provided to the authority having jurisdiction.

26.5.8.2 Testing and maintenance records shall be retained as required in 14.6.3.

26.5.8.3 Records shall be permitted to be created by manual means.

Unlike central station service and proprietary station systems that keep records automatically, remote supervising station alarm systems are not required to provide an automatic permanent visible record of signals received, although many modern communications center facilities have the ability to do so. Operators in a remote supervising station usually maintain a manual logbook that contains the required records, as permitted by 26.5.8.3. In some cases, operators maintain a logbook by manually entering data into a database. Paragraph 26.5.8.3 effectively serves as an exception to the requirements in 26.6.6.5(2).

26.5.9 Inspection, Testing, and Maintenance.

26.5.9.1 Inspection, testing, and maintenance for remote supervising stations shall be performed in accordance with Chapter 14.

26.5.9.2 Where required, inspection, testing, and maintenance reports shall be submitted to the authority having jurisdiction in a form acceptable to the authority having jurisdiction.

It is important that the authority having jurisdiction knows when fire alarm systems are inspected and tested, whether they are central station service, proprietary station, or remote station systems.

26.6 Communications Methods for Supervising Station Alarm Systems.

Three classifications of communications methods are addressed in the Code. The transmitters for these methods are situated at the protected premises. The first classification includes performance-based technologies, which are covered in 26.6.3. This classification includes technologies that at one time were called "other technologies." These technologies include equipment such as IP communicators and global system for mobile (GSM) communications. Legacy technologies are also included under the performance-based grouping. For the most part, legacy technologies are no longer being installed but may exist in some installations. Finally, performance-based technologies can include any newly developed communications method that can meet the requirements of 26.6.3.

The second communications classification includes the digital alarm communicator system (DACS), addressed in 26.6.4. These systems use a DACT at the protected premises and a DACR at the supervising station.

The third communications classification includes radio systems, which are covered in 26.6.5. This classification is split into two types of radios. Paragraph 26.6.5.1 provides the requirements for two-way radio frequency (RF) multiplex systems. Paragraph 26.6.5.2 provides the requirements for one-way private radio alarm systems, which are more common. These communications methods are addressed in more detail in subsequent commentary.

Exhibit 26.9 illustrates the communications methods addressed by the Code.

26.6.1* Application.

A.26.6.1 Refer to Table A.26.6.1 for communications methods.

EXHIBIT 26.9

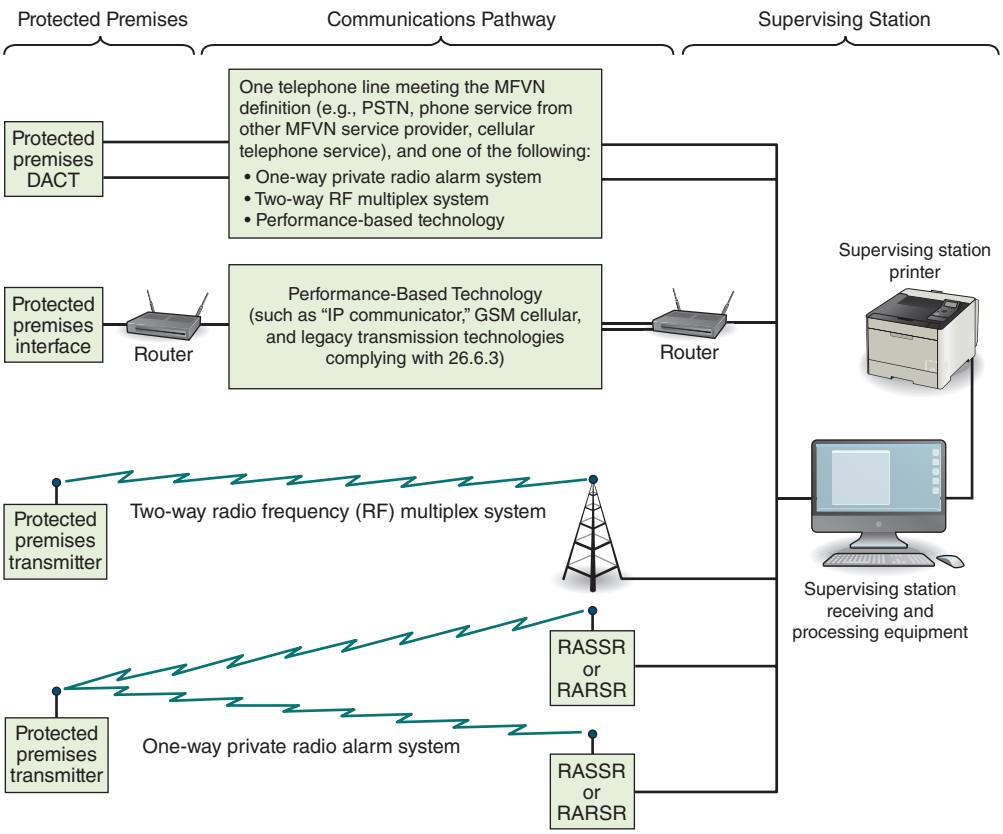

Communications Methods for Supervising Station Alarm Systems.

Δ ***TABLE A.26.6.1*** *Communications Methods for Supervising Stations*

Criteria	*Performance-Based Technologies 26.6.3*	*Digital Alarm Communicator Systems 26.6.4*	*Two-Way Radio Frequency (RF) Multiplex Systems 26.6.5.1*	*One-Way Private Radio Alarm Systems 26.6.5.2*
FCC approval when applicable	Yes	Yes	Yes	Yes
Conform to *NFPA 70*	Yes	Yes	Yes	Yes
Monitoring for integrity of the transmission and communications channel	Monitor for integrity	Both the premises unit and the system unit monitor for integrity in a manner approved for the means of transmission employed. A single signal received on each incoming DACR line once every 6 hours.	Systems are periodically polled for end-to-end communications integrity.	Test signal from every transmitter once every 24 hours

(*continues*)

Δ ***TABLE A.26.6.1*** *Continued*

Criteria	*Performance-Based Technologies 26.6.3*	*Digital Alarm Communicator Systems 26.6.4*	*Two-Way Radio Frequency (RF) Multiplex Systems 26.6.5.1*	*One-Way Private Radio Alarm Systems 26.6.5.2*
Annunciate, at the supervising station, the degradation and restoration of the transmission or communications channel	Within 60 minutes for a single communication path and within 6 hours for multiple communication paths	Within 4 minutes using alternate phone line to report the trouble	Not exceed 90 seconds from the time of the actual failure	Only monitor the quality of signal received and indicate if the signal falls below minimum signal quality specified in Code
Redundant communication path where a portion of the transmission or communications channel cannot be monitored for integrity		Employ a combination of two separate transmission channels alternately tested at intervals not exceeding 6 hours	Redundant path not required — supervising station always indicates a communications failure	Minimum of two independent RF paths must be simultaneously employed
Interval testing of the backup path(s)		When two phone lines are used, test alternately every 6 hours. Testing for other back-up technologies, see 26.6.4.1.4(B).	Backup path not required	No requirement, because the quality of the signal is continuously monitored
Annunciation of communication failure or ability to communicate at the protected premises	Systems where the transmitter at the local premises unit detects a communication failure, the premises unit will annunciate the failure within 200 seconds of the failure	Indication of failure at premises due to line failure or failure to communicate after from 5 to 10 dialing attempts	Not required — always annunciated at the supervising station that initiates corrective action	Monitor the interconnection of the premises unit elements of transmitting equipment, and indicate a failure at the premises or transmit a trouble signal to the supervising station.
Time to restore signal-receiving, processing, display, and recording equipment	Where duplicate equipment not provided, spare hardware required so a repair can be effected within 30 minutes.	Spare digital alarm communicator receivers required for switchover to backup receiver in 30 seconds. One backup system unit for every five system units.	Where duplicate equipment not provided, spare hardware required so a repair can be effected within 30 minutes	Where duplicate equipment not provided, spare hardware required so a repair can be effected within 30 minutes
Loading capacities for system units and transmission and communications channels	512 independent alarm systems on a system unit with no backup. Unlimited if you can switch to a backup in 30 seconds.	See Table 26.6.4.2.2(D) for the maximum number of transmitters on a hunt group in a system unit	512 buildings and premises on a system unit with no backup. Unlimited if you can switch to a backup in 30 seconds.	512 buildings and premises on a system unit with no backup. Unlimited if you can switch to a backup in 30 seconds.

Δ ***TABLE A.26.6.1*** *Continued*

Criteria	*Performance-Based Technologies 26.6.3*	*Digital Alarm Communicator Systems 26.6.4*	*Two-Way Radio Frequency (RF) Multiplex Systems 26.6.5.1*	*One-Way Private Radio Alarm Systems 26.6.5.2*
End-to-end communication time for an alarm	90 seconds from initiation of alarm until displayed to the operator and recorded on a medium from which the information can be retrieved	Off-hook to on-hook not to exceed 90 seconds per attempt. 10 attempts maximum. 900 seconds maximum for all attempts.	90 seconds from initiation until it is recorded	90% probability to receive an alarm in 90 seconds, 99% probability in 180 seconds, 99.999% probability in 450 seconds
Record and display rate of subsequent alarms at supervising station	Not slower than one every 10 additional seconds	Not addressed	When any number of subsequent alarms come in, record at a rate not slower than one every additional 10 seconds	When any number of subsequent alarms come in, record at a rate not slower than one every additional 10 seconds
Signal error detection and correction	Signal repetition, parity check, or some equivalent means of error detection and correction must be used.	Signal repetition, digital parity check, or some equivalent means of signal verification must be used.	Not addressed	Not addressed
Path sequence priority	No need for prioritization of paths. The requirement is that both paths are equivalent.	The first transmission attempt uses the primary channel.	Not addressed	Not addressed
Carrier diversity		Where long distance service (including WATS) is used, the second telephone number must be provided by a different long distance service provider where there are multiple providers.	Not addressed	Not addressed
Throughput probability		Demonstrate 90% probability of a system unit immediately answering a call or follow the loading in Table 26.6.4.2.2(D). One-way radio backup demonstrates 90% probability of transmission.	Not addressed	90% probability to receive an alarm in 90 seconds, 99% probability in 180 seconds, 99.999% in probability 450 seconds

(*continues*)

Δ ***TABLE A.26.6.1*** *Continued*

Criteria	*Performance-Based Technologies 26.6.3*	*Digital Alarm Communicator Systems 26.6.4*	*Two-Way Radio Frequency (RF) Multiplex Systems 26.6.5.1*	*One-Way Private Radio Alarm Systems 26.6.5.2*
Unique premises identifier	If a transmitter shares a transmission or communication channel with other transmitters, it must have a unique transmitter identifier.	Yes	Yes	Yes
Unique flaws	From time to time, there may be unique flaws in a communication system. Unique requirements must be written for these unique flaws.	If call forwarding is used to communicate to the supervising station, verify the integrity of this feature every 4 hours.	None addressed	None addressed
Signal priority	If the communication methodology is shared with any other usage, all alarm transmissions must preempt and take precedence over any other usage. Alarm signals take precedence over supervisory signals.	Chapter 1 on fundamentals requires that alarm signals take priority over supervisory signals unless there is sufficient repetition of the alarm signal to prevent the loss of an alarm signal.	Chapter 1 on fundamentals requires that alarm signals take priority over supervisory signals unless there is sufficient repetition of the alarm signal to prevent the loss of an alarm signal.	Chapter 1 on fundamentals requires that alarm signals take priority over supervisory signals unless there is sufficient repetition of the alarm signal to prevent the loss of an alarm signal.
Sharing communications equipment on premises	If the transmitter is sharing on-premises communications equipment, the shared equipment must be listed for the purpose (otherwise the transmitter must be installed ahead of the unlisted equipment).	Disconnect outgoing or incoming telephone call and prevent its use for outgoing telephone calls until signal transmission has been completed.	Not addressed	Not addressed

System Design Tip

The Code makes a full range of listed transmission technologies available to all the supervising station services (see 26.6.2.2). This range of transmission technologies gives designers maximum flexibility in choosing the transmission technology most appropriate for a particular application. Model codes do not limit the use of any particular transmission technology, but some jurisdictions may. Designers should discuss system design with the authority having jurisdiction before commencing.

Specific reference to certain long-standing technologies are not included due to the significant reduction in their use. These are now referred to as legacy technologies in A.26.6.3 and include the following:

1. Active multiplex systems, including systems using derived local channels
2. McCulloh systems
3. Directly connected, non-coded systems
4. Private microwave radio systems

Where existing systems continue to use these legacy technologies, their use remains acceptable because they still meet the performance-based requirements of 26.6.3.

In addition to the performance-based requirements in 26.6.3, specific requirements for the following technologies are provided:

1. DACSs (see 26.6.4)
2. Radio systems (see 26.6.5)
   a. Two-way RF multiplex systems (see 26.6.5.1)
   b. One-way private radio alarm systems (see 26.6.5.2)

The Code has no direct jurisdiction over public utilities such as telephone service provided by public telephone utility companies over a managed facility-based voice network.

See the accompanying Closer Look feature for some history on transmission technologies available to supervising stations, including the need for standby power.

Closer Look

A History of Transmission Technologies Available to Supervising Stations and the Need for Standby Power

In 1964, a signaling summit meeting was held to determine which organizations would take on the responsibility for ensuring the life cycle quality assurance of central station systems. Representatives from Underwriters Laboratories Inc., the National Board of Fire Underwriters, and major insurance companies including Factory Insurance Association and Factory Mutual Engineering Corporation, attended this meeting. Many of those representatives also served on the NFPA Technical Correlating Committee on Signaling Systems responsible for the NFPA alarm and signaling systems standards. Among the decisions made at that meeting was acceptance of the inherent reliability of the private line (PL) circuits provided by the PSTN. Most central station operating companies leased PL circuits from the public telephone company utility to provide a signal pathway between various protected premises and the central station.

Representatives of the Bell Laboratories division of AT&T had earlier submitted detailed documentation in the form of standards, known as tariffs, that described the methods of ensuring operational integrity of the PSTN and PL circuits that used the cable plant of that system. The tariffs included requirements that provided for extensive standby (backup) power supplies at the telephone company wire centers to ensure the availability of independent power to operate all circuits and equipment for at least 72 hours.

Based on this extensive documentation, the representatives at the signaling summit agreed that the NFPA standards did not need to address any requirements for the signaling pathways inside the PSTN if telephone companies adhered to the current tariffs and if the listed signaling equipment would electrically supervise the integrity of the signaling connection (pathway). AT&T further agreed to apply to NFPA for admission as a member of the appropriate signaling systems standards technical committee.

(*continues*)

Closer Look (*Continued*)

In the late 1970s, manufacturers first proposed that requirements for the use of DACSs be included in NFPA 71, *Standard for the Installation, Maintenance, and Use of Signaling Systems for Central Station Service*. The AT&T representative outlined the scope of the applicable tariffs and described in detail the statistical analysis methods that Bell Laboratories used to determine the operational reliability of the PSTN. Based on that testimony, requirements were added to permit the use of DACSs, providing that the equipment monitored the voltage on the circuit extending from the nearest telephone company wire center to the protected premises.

This technology required the use of "loop start" telephone pairs. The public telephone utility company typically provided loop start pairs for use in single line service drops to residences or businesses using only one or two telephone lines (numbers). When a business needed multiple telephone lines (numbers), the public telephone utility company typically provided ground start pairs to conserve standby battery power at their wire centers. (See the Closer Look feature following A.26.6.4.1.1.)

It was determined that a test of the DACS from each protected premises every 24 hours would give a level of transmission integrity equivalent to that used by radio master fire alarm boxes, as then stated in NFPA 1221.

In 1982, Judge Harold Greene of the U.S. District Court in Washington, DC, issued a momentous decision [552 F. Supp. 131 (DDC 1982)] in *United States v. AT&T*. The consent decree filed in this case resulted in the breakup of the telephone monopoly of AT&T into seven Regional Bell Operating Companies. This resulted in many changes in operations and technology, including a change in the rigorous enforcement of the implementation standards behind various operational tariffs.

Over time, various public telephone utility companies began to implement technology to provide service using the PSTN without regard for a consistently long period of standby power. In some cases, the provision of voltage on loop start telephone pairs no longer originated from a telephone company wire center. Instead, localized concentrator units placed in the field provided power to the loop start telephone pairs. Initially, some of these field-located concentrators had no standby power. When some authorities having jurisdiction discovered this, they began to refuse to accept supervising station alarm systems using such telephone pairs. In response, the public telephone utility companies began to provide some standby power for field-located equipment. Most of the time, the standby power consisted of only 8 hours of continuous power following the loss of primary power.

Today, customers can purchase telephone service from a variety of service providers; however, a state's public utility authority might not regulate all these providers. For example, some companies that provide cable television services now also provide phone service. In many locales, the cable television provider has a local contract to do business with a local government agency. The cable company is not treated as a utility company and is not regulated by the state public utility authority.

The Code continues to require 24 hours of standby power for fire alarm systems (see 10.6.7.2.1, and 26.6.3.13.1); also see the definition for the term *managed facilities-based voice network (MFVN)* in 3.3.161 and A.3.3.161. Owners and authorities having jurisdiction should keep this requirement in mind when selecting a particular transmission technology. The careful addition of an alternate signaling pathway may offer a prudent solution.

Δ **26.6.1.1** Section 26.6 shall apply to the following:

(1) Transmitter located at the protected premises
(2) Transmission channel between the protected premises and the supervising station or subsidiary station
(3) If used, any subsidiary station and its communications channel
(4) Signal receiving, processing, display, and recording equipment at the supervising station

26.6.1.2 The minimum signaling requirement shall be an alarm signal, trouble signal, and supervisory signal, where used.

26.6.2 General.

26.6.2.1 Master Control Unit. If the protected premises master control unit is neither integral to nor colocated with the supervising station, the communications methods of Section 26.6 shall be used to connect the protected premises to either a subsidiary station, if used, or a supervising station for central station service in accordance with Section 26.3, proprietary station in accordance with Section 26.4, or remote station in accordance with Section 26.5.

26.6.2.2* Alternate Methods. Nothing in Chapter 26 shall be interpreted as prohibiting the use of listed equipment using alternate communications methods that provide a level of reliability and supervision consistent with the requirements of Chapter 10 and the intended level of protection.

A.26.6.2.2 It is not the intent of Section 26.6 to limit the use of listed equipment using alternate communications methods, provided these methods demonstrate performance characteristics that are equal to or superior to those technologies described in Section 26.6. Such demonstration of equivalency is to be evidenced by the equipment using the alternate communications methods meeting all the requirements of Chapter 10, including those that deal with such factors as reliability, monitoring for integrity, and listing. It is further expected that suitable proposals stating the requirements for such technology will be submitted for inclusion in subsequent editions of this Code.

Transmission technologies have changed considerably; the accompanying Closer Look provides some perspective when used by supervising station systems.

Closer Look

The Development of Transmission Technologies in the Code

System Design Tip

Over the years, as it encompassed new transmission technologies, the Code most often compared new technologies to the performance capabilities of the McCulloh system, the first transmission technology used by supervising station systems. This comparison permitted a mix of certain operational requirements among various technologies. Therefore, 26.6.2.2 is a warning to make certain that when applying a particular transmission technology, authorities having jurisdiction, system designers, installers, and users must not ignore critical operational requirements that appear in Chapter 10 and in Section 26.6.

The 1999 edition of the Code introduced a separate section of Chapter 26 titled Other Transmission Technologies. This section provided a generic set of performance requirements that would permit the use of any new transmission technology that demonstrated it could meet certain critical operational requirements. This section was meant to address the advent of different new technologies, such as packet switched networks.

In the 2010 edition, the vast majority of the performance requirements were moved from the section on other transmission technologies to 26.6.3.1. The relocation of the performance requirements to the beginning of 26.6.3, Communications Methods, underscored the importance of that section for evaluating new technologies. In the 2013 edition, the subsection was renamed Performance-Based Technologies.

The last sentence of A.26.6.2.2 contains important guidance: "It is further expected that suitable proposals stating the requirements for such technology will be submitted for inclusion in subsequent editions of this Code." Because manufacturers will continue to introduce new transmission technologies, 26.6.2.2 and 26.6.3 through 26.6.3.14 include provisions that manufacturers should consider in developing new technology to meet the intent of the Code. However, as manufacturers develop new technologies, they should take advantage of the NFPA standards-making process and submit appropriate new requirements for consideration by the technical committee.

26.6.2.3* Equipment.

A.26.6.2.3 The communications cloud is created by multiple telephone lines and multiple paths on the Internet. Under these circumstances, the requirements of Chapters 10 and 14, as required by 26.1.2, do not apply to devices comprising the communications cloud.

Δ **26.6.2.3.1** Alarm system equipment and installations shall comply with Federal Communications Commission (FCC) rules and regulations, as applicable.

The 2019 edition has eliminated specific references to items and issues that are regulated by the Federal Communications Commission (FCC) because the list was determined to be unnecessary. The extent of FCC regulations is outside the scope of the Code. The FCC has jurisdiction over the installation requirements for communications equipment. Circumstances can occur in which the FCC requirements supersede a requirement of this Code. For example, in certain portions of the regulated radio spectrum, FCC regulations may limit the amount of time a transmitter may operate continuously. Likewise, FCC regulations may limit the number of times within a prescribed time that a radio transmitter may operate, such as a certain number of times per hour. These regulations can limit the way such technologies are used for transmitting signals from a protected premises.

The FCC also has jurisdiction over the engineering practices and services offered by providers of telephone service to subscribers using MFVNs. Refer to the defined term of *managed facilities-based voice network (MFVN)* in 3.3.161.

The FCC has some jurisdiction over all providers of phone service, including, but not limited to, broadband service providers, cable service providers, and other service providers.

26.6.2.3.2 Equipment shall be installed in compliance with *NFPA 70*.

Where certain supervising station transmission technologies use equipment that transmits an RF signal, that equipment, in particular its antenna, must be installed in compliance with the appropriate articles of *NFPA 70®*, *National Electrical Code®* (*NEC®*). As stated, in part, in Section 810.1 of the *NEC*: "This article covers antenna systems for radio and television receiving equipment, amateur and citizen band radio transmitting and receiving equipment, and certain features of transmitter safety. This article covers antennas such as wire-strung type, multi-element, vertical rod, flat, or parabolic and also covers the wiring and cabling that connects them to equipment."

26.6.2.3.3 The external antennas of all radio transmitting and receiving equipment shall be protected in order to minimize the possibility of damage by static discharge or lightning.

26.6.2.4 Communications Technologies. The communications methods used to transmit signals to supervising stations shall meet the requirements of 26.6.3 for performance-based technologies, or 26.6.4 or 26.6.5 for prescriptive-based technologies.

26.6.3* Performance-Based Technologies.

A.26.6.3 Certain legacy technologies (active multiplex, McCulloh, directly connected non-coded and private microwave) have been removed from the text of the document. Existing systems utilizing these technologies are acceptable, because all these technologies also comply with the general provisions of 26.6.3.

The object of 26.6.3 is not to give details of specific technologies but rather give basic operating parameters of the transmission supervision rates of technologies. The following list represents examples of current technologies that can be configured to meet the requirements and the intent of 26.6.3:

(1) Transmitters using IP (Internet Protocol)
(2) IP transmission over the public open Internet or over private IP facilities maintained by an organization for its own use
(3) Transmitters using various (non-dialup) digital cellular technology

Wired IP Transmission. There are two types of wired IP transmission devices. One where the IP network is connected directly to the fire alarm control unit (integrated IP or native IP). The second uses an intermediary module that can include the following:

(1) IP dialer capture module
(2) IP data capture module (such as RS-232, keypad bus, RS-485)
(3) Relay contact monitoring module

Devices referred to as "IP dialer capture modules" (an IP communicator used with a DACT) are transmission devices that connect to the DACT output of the fire alarm control unit and convert the output data stream to IP (Internet protocol). As such, they are considered to use IP technology in their connection to the IP network. Therefore they should be treated in this Code under the requirements of 26.6.3, performance-based technologies, and not under the requirements of 26.6.4, digital alarm communicator systems.

Digital Cellular. To accommodate an increase in the demand for mobile wireless communications as well as introducing new services over that same network, wireless voice communications no longer utilizes dedicated connections to pass voice band frequencies. Current ubiquities methods such as 2G and 3G have established a new and different environment to operate. In place of the voice band, the voice conversation is converted into a stream of bits and packaged within data packets that conform to messaging protocols, packets are addressed to a destination point, delivered into the network, received by the destination point, and are converted back into an intelligible voice-grade message. The message exchange through this wireless data network is done through well known defined protocols such as "Global System for Mobile" communications (GSM) for voice communications as well as Code Division Multiple Access (CDMA) for both voice and data and General Packet Radio Service (GPRS) mobile data services. These protocols have been developed to operate in an optimal way for the intended application. For example, GSM is used to efficiently establish voice-grade connections that deliver an appropriate level of intelligible voice quality, but might not be good enough to pass tones that represent data. Data transmission is better served by GPRS and CDMA where a connection into the wireless network is always available without having to "dial," and large amounts of data can be efficiently transmitted. However the data passed using GPRS or CDMA is not that of coded tones such as DTMF (Contact ID), but is computer type messages similar to IP.

When using digital cellular, a DACT might or might not be used.

For example, the digital cellular device might be used to backup the DACT or, if properly supervised, be used as a stand-alone device. If used, the DACT is connected to a digital cellular radio device that connects to the cellular network by means of an antenna. The digital cellular radio device is constantly connecting to the wireless network and is always ready to attempt to transmit to a destination address without having to "dial" a number. The radio device recognizes that the alarm panel is attempting to place a call by the DACT's "off-hook" signaling. The radio device accepts the DACT tone signaling, converts it into a packeted data stream, and sends the packets into the wireless network for delivery to a pre-assigned destination address.

Paragraphs 26.6.3 through 26.6.3.14 provide performance-based requirements for transmission methods used by supervising station systems. Specific requirements to be followed for DACSs and radio systems are provided in 26.6.4 and 26.6.5, respectively.

The following legacy technologies are no longer included in the Code:

1. Active multiplex systems, including systems using derived local channels
2. McCulloh systems
3. Directly connected, non-coded systems
4. Private microwave radio systems

Where existing systems continue to use these legacy technologies, their use remains acceptable because they still meet the performance-based requirements of 26.6.3.

In addition, as new technologies develop, the requirements of 26.6.3 through 26.6.3.14 will provide users of the Code a way to assess the acceptability and equivalency of those new technologies.

Exhibit 26.10 shows the circuit board for an Internet protocol (IP) communicator. This equipment transmits data across a packet switched network using IP.

The IP communicator shown in Exhibit 26.10 is a version that connects to a traditional DACT using inputs from its two telephone lines. It concentrates signals from two loop start telephone circuits into packet switched data in compliance with 26.6.3.

Exhibit 26.11 depicts an IP communicator that communicates with the supervising station via IP and 4G cellular. At the protected premises, the unit connects to the FACU via a traditional DACT's two telephone lines. Another illustration of equipment that falls under the requirements of 26.6.3 is shown in Exhibit 26.12.

EXHIBIT 26.10

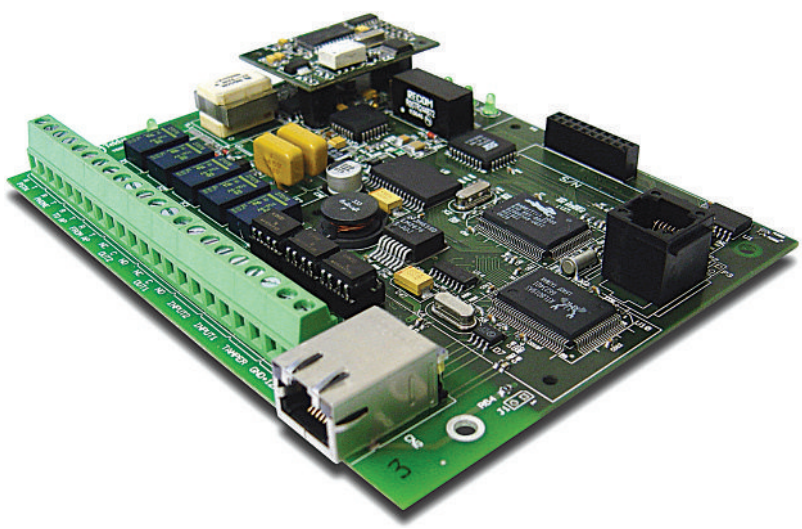

IP Communicator That Connects Protected Premises to Supervising Station via Internet. (Source: Silent Knight by Honeywell, Maple Grove, MN)

EXHIBIT 26.11

IP Communicator That Connects Protected Premises to Supervising Station via Internet and Cellular. (Courtesy of Honeywell Fire Safety)

EXHIBIT 26.12

Supervising Station Computer and Three Models of Subscriber Premises Units: One for Contact Monitoring, One for Dialer Capture, and One for Serial Port Monitoring. (Courtesy of Keltron)

26.6.3.1 Conformance. Communications methods operating on principles different from specific methods covered by this chapter shall be permitted to be installed if they conform to the performance requirements of this section and to all other applicable requirements of this Code.

26.6.3.2 Communications Integrity. Provision shall be made to monitor the integrity of the transmission technology and its communications path.

Δ **26.6.3.3 Single Communications Path.** Unless prohibited by the enforcing authority, governing laws, codes, or standards, where a single communications path is used, the following requirements shall be met:

(1) The path shall be supervised at an interval of not more than 60 minutes.
(2) A failure of the path shall be annunciated at the supervising station within not more than 60 minutes.
(3) The failure to complete a signal transmission shall be annunciated at the protected premises in accordance with Section 10.15.

Paragraph 26.6.3.3 requires notification of failure of a single transmission pathway within 60 minutes. Note that in editions of the Code before 2013, notification of failure was required within 5 minutes. Through experience using IP pathways such as the Internet, it became apparent that Internet service providers (ISPs) periodically shut down their access for routine maintenance for up to 20 minutes or more. The permitted failure notification is 60 minutes to avoid nuisance trouble reports due to this regularly scheduled maintenance by the ISPs. When evaluating the possible use of an IP pathway as the single pathway available to send alarm signals to the supervising station, owners and authorities having jurisdiction need to consider whether the periodic loss of signal transmission ability is an acceptable risk for the property and its occupants. The use of a dual mode transmitter, using different communications pathways (see Exhibit 26.11), may provide a desired level of redundancy.

26.6.3.4 Multiple Communications Paths. If multiple transmission paths are used, the following requirements shall be met:

(1) Each path shall be supervised within not more than 6 hours.
(2) The failure of any path of a multipath system shall be annunciated at the supervising station within not more than 6 hours.
(3) Multiple communications paths shall be arranged so that a single point of failure shall not cause more than a single path to fail.
(4) The failure to complete a signal transmission shall be annunciated at the protected premises in accordance with Section 10.15.

Systems using two or more communications pathways are required to monitor the integrity of each path to detect failures within 6 hours. It is important to note that the two pathways are not required to use different technologies (see 26.6.3.5).

Paragraph 26.6.3.4(3) requires that pathways be arranged to prevent a single point of failure for the two pathways, regardless of whether two paths of different technologies, or two of the same technology, are used to meet the multiple communications paths. This requirement does not apply to the actual transmitter, but would apply to the pathways leading from the transmitter to the exterior of the building, after which the Code does not have jurisdiction.

At the protected premises, failure to complete any signal transmission must be annunciated within 200 seconds, as prescribed in Section 10.15, but up to 6 hours are permitted to transmit that communications failure over the remaining pathway to the supervising station for annunciation. The 24-hour requirement was reduced to 6 hours in the 2013 edition, recognizing that standby power provided by most service providers consists of 8 hours of continuous power or less. Refer to the commentary following A.26.6.1.

Δ **26.6.3.5* Single Technology.** A single technology shall be permitted to be used to create the multiple paths provided that the requirements of 26.6.3.4(1) through 26.6.3.4(4) are met.

A.26.6.3.5 When considering a fire alarm system utilizing a single communication path to the supervising station, consideration should be given to the risk exposure that results from the loss of that path for any period of time and for any reason. Some of these outages can be regular and predicable and others transitory.

One example of a single technology used to produce two paths is the use of a digital cellular premises unit communicating with two or more cell towers. In this case, the supervising station and the protected premises must be made aware if communications degrades to below two towers. Another example is the use of two different cellular carriers to produce the two paths. Similarly, in this case the supervising station and the protected must be made aware if communications degrades to one carrier.

26.6.3.6 Spare System Unit Equipment. An inventory of spare equipment shall be maintained at the supervising station such that any failed piece of equipment can be replaced and the systems unit restored to full operation within 30 minutes of failure.

System Design Tip

Not only must the supervising station maintain spare equipment, operators at the supervising station must be able to place the spare equipment into service within 30 minutes of unit failure. This requirement dictates a careful design of the supervising station to allow a relatively quick change of failed equipment.

26.6.3.7 Loading Capacity of System Unit.

26.6.3.7.1 The maximum number of independent fire alarm systems connected to a single system unit shall be limited to 512.

26.6.3.7.2 If duplicate spare system units are maintained at the supervising station and switchover can be achieved in 30 seconds, then the system capacity shall be permitted to be unlimited.

The loading capacity of a system unit directly relates to the ability of that system to process and display signal traffic on a timely basis. The requirements of 26.6.3.7.1 and 26.6.3.7.2 set a baseline level of loading to ensure the system's ability to perform in an emergency with high signal traffic.

26.6.3.8 End-to-End Communication Time for Alarm. The maximum duration between the initiation of an alarm signal at the protected premises, transmission of the signal, and subsequent display and recording of the alarm signal at the supervising station shall not exceed 90 seconds.

26.6.3.9 Unique Identifier. If a transmitter shares a transmission or communications channel with other transmitters, it shall have a unique transmitter identifier.

26.6.3.10 Recording and Display Rate of Subsequent Alarms. Recording and display of alarms at the supervising station shall be at a rate no slower than one complete signal every 10 seconds.

The time limit of 10 seconds sets a baseline level for the recording and display of incoming signals. This time frame has its roots not only in the processing speed of the equipment, but it also takes into account the ability of an operator to perceive the nature of the signal and mentally filter the information in the incoming signal and what it intends to convey. However, the time frame does not take into consideration the time it may take the operator to decide what to do about the signal nor the time it would take the operator to take the prescribed action.

26.6.3.11 Signal Error Detection and Correction.

26.6.3.11.1 Communication of alarm, supervisory, and trouble signals shall be in accordance with this section to prevent degradation of the signal in transit, which in turn would result in either of the following:

(1) Failure of the signal to be displayed and recorded at the supervising station
(2) Incorrect corrupted signal displayed and recorded at the supervising station

Δ **26.6.3.11.2** Reliability of the signal shall be achieved by any of the following:

(1) Signal repetition — multiple transmissions repeating the same signal
(2) Parity check — a mathematically check sum algorithm of a digital message that verifies correlation between transmitted and received message
(3) An equivalent means to 26.6.3.11.1(1) or 26.6.3.11.1(2) that provides a certainty of 99.99 percent that the received message is identical to the transmitted message

The requirements in 26.6.3.11.1 and 26.6.3.11.2 provide a baseline level of performance to help ensure that the transmission technology delivers clear and consistent signal information from the protected premises. This offers guidance to the manufacturer using a new technology by explaining how existing technologies have achieved the objective. At the same time, 26.6.3.11.2(3) carefully permits alternative means of achieving the objective within a critical level of statistical certainty (99.99 percent).

26.6.3.12* Sharing Communications Equipment On-Premises. If the fire alarm transmitter is sharing on-premises communications equipment, the shared equipment shall be listed as communications or information technology equipment.

A.26.6.3.12 Most communications equipment is not specifically listed for fire alarm applications, but is listed in accordance with applicable product standard for general communications equipment and is acceptable.

The requirement for listing supports the requirement of 10.3.1. The requirement clarifies that, in most cases, shared communications equipment will not bear a specific listing for alarm service. Rather, the shared equipment will bear a listing for communications equipment. An example of this would be a router, switch, or other piece of data communications equipment through which alarm system data might pass.

In general, to determine whether a piece of equipment should have a specific listing for alarm service, the following question can be posed: "Does this equipment translate or change the alarm system data in any way, or does it merely pass the alarm system data through and onto other parts of the communications pathway?" If the equipment changes or translates the data in some way, then the nature of the change or translation should be investigated to determine whether the equipment could adversely affect the transmission of the alarm data. Such investigation should help determine whether the particular piece of equipment should bear a specific listing for alarm service use.

26.6.3.13 Secondary Power.

26.6.3.13.1* Premises Equipment. The secondary power capacity for all transmitters and shared equipment necessary for the transmission of alarm, supervisory, trouble, and other signals located at the protected premises shall be a minimum of 24 hours or as permitted by 10.6.7.3.1(2), 26.6.3.13.1.1, or 26.6.3.13.1.2.

• N **A.26.6.3.13.1** Shared equipment owned by or under the control of the subscriber should provide 24 hours of secondary standby power.

The requirements for secondary power have been clarified to be provided for all transmitters and shared equipment under the requirements for performance-based technologies. The options are 24 hours of secondary power or an automatic generator with 4 hours of secondary power [see 10.6.7.3.1(2)]. These requirements will typically mirror the secondary power being provided for the FACU.

N **26.6.3.13.1.1*** Secondary power capacity for shared equipment shall be permitted to have a capacity of 8 hours where acceptable to the authority having jurisdiction and where a risk analysis is performed to ensure acceptable availability is provided.

N **A.26.6.3.13.1.1** Shared equipment owned by or under the control of an approved managed facilities-based voice network provider should supply 8 hours of secondary power.

The authority having jurisdiction is permitted to approve a reduction of the secondary power requirement to 8 hours where a risk analysis has been performed. There may be a demonstrated instance where a facility's owner, or system designer, illustrates to the authority having jurisdiction that the restoration of power to the shared equipment can be accomplished in 8 hours of less, in which case the need for 24 hours would not be necessary.

System Design Tip

N **26.6.3.13.1.2*** Secondary power capacity for shared and premises equipment used in additional communications paths shall not be required where the first communications path meets the performance requirements of 26.6.3.3.

N **A.26.6.3.13.1.2** The requirement in 26.6.3.13.1.2 does not exempt first communications path transmitters and first communications path shared equipment necessary for the transmission of alarm, supervisory, trouble, and other signals located at the protected premises from the secondary power capacity requirements of 26.6.3.13. This section does not permit the communications paths to be considered multiple communication paths under 26.6.3.4.

New paragraph 26.6.3.13.1.2 addresses the scenario of the owner of a fire alarm system desiring two communications pathways when a single path is permitted as long as the performance requirements of 26.6.3.3 are satisfied. Some were applying the requirements for multiple communications paths when dual mode transmitters were installed. Because one common transmitter uses an IP communicator transmitter (and GSM radio), secondary power would have been required on the shared equipment adding additional costs to the system owner. Paragraph 26.6.3.13.1.2 indicates that secondary power is not required for shared or premises equipment on additional communications pathways when the primary communications pathway meets the requirements of 26.6.3.3. The most notable requirement that must be met is the required pathway supervision, which must occur at intervals of not more than 60 minutes.

26.6.3.13.2 Supervising Station. Secondary power capacity for all equipment necessary for reception of alarm, supervisory, trouble, and other signals located at the supervising station shall comply with 10.6.7.

It is important to note that the requirement in 26.6.3.13.1 for 24 hours of standby power, according to 10.6.7, applies to the equipment at the protected premises in 26.6.3.13.1.1, including shared on-premises equipment such as equipment installed by the provider of the communications pathway. Equipment at the supervising station is covered in 26.6.3.13.2.

System Design Tip

Shared equipment at the protected premises may not be provided and/or installed by the alarm system contractor. Nonetheless, because the continued operation of this shared equipment on the loss of primary power is important to the transmission of signals to the supervising station, 26.6.3.13.1 requires that secondary power be provided in accordance with 10.6.7. When alarm systems are designed incorporating technology that requires shared equipment for signal transmission, the designer must allow for this requirement. When authorities having jurisdiction are reviewing plans and specifications submitted for approval, they must see that the shared equipment is provided with the necessary secondary power.

The requirement for secondary power does not specifically apply to off-premises equipment in the communications pathway supplied by the provider of the communications pathway. Paragraph 26.6.3.13.1 covers premises equipment while 26.6.3.13.2 covers supervising station equipment.

Paragraph 26.6.3.13.1.1 allows the authority having jurisdiction to permit 8 hours of standby power for shared on-premises equipment on a case-by-case basis and only where a risk analysis is performed and documented. The potential for longer power outages at specific locations — such as a protected premises or, to a lesser extent, a supervising station — statistically exceeds the likelihood of longer power outages over a wider area that might affect field-located communications pathway equipment. The standby power to the signaling pathway should be robust enough to permit the prompt transmission of a loss of power trouble signal. Then, with the longer (24 hours) standby power for the fire alarm equipment, that equipment will continue to provide a level of fire alarm service.

26.6.3.14 Unique Flaws Not Covered by This Code. If a communications technology has a unique flaw that could result in the failure to communicate a signal, the implementation of that technology for alarm signaling shall compensate for that flaw so as to eliminate the risk of missing an alarm signal.

This requirement reminds manufacturers to investigate carefully any new technology they consider. They must identify any unique flaws and compensate for those flaws accordingly.

26.6.4 Digital Alarm Communicator Systems.

26.6.4.1 Digital Alarm Communicator Transmitter (DACT).

26.6.4.1.1* Managed Facilities-Based Voice Network.

The term *managed facilities-based voice network (MFVN)* is used frequently in the requirements for DACS. This is because the term *public switched telephone network (PSTN)* was used in many locations because of its importance to a DACS. As defined in 3.3.161 and as further explained in A.3.3.161, the MFVN is equivalent in function to a PSTN provided by traditional public utility phone companies. Current technologies have permitted other entities to provide robust communications networks. As such, the term *MFVN* applies to traditional PSTNs and new technologies that can emulate PSTNs, and it is used throughout 26.6.4.

A DACT shall be connected to a managed facilities-based voice network upstream of any private telephone system at the protected premises.

(A) The connections to a managed facilities-based voice network shall be under the control of the subscriber for whom service is being provided by the supervising station alarm system.

(B) Special attention shall be required to ensure that this connection is made only to a loop start telephone circuit and not to a ground start telephone circuit.

A.26.6.4.1.1 Special care should be used when connecting a DACT to a digital service such as DSL or ADSL. Filters or other special equipment might be needed to communicate reliably.

The Code long presumed a level of reliability from PSTNs that likely did not exist. See the commentary following 26.6.4.1.4 regarding PSTNs. The accompanying Closer Look feature provides some perspective on what had been the traditional reliability of the PSTN.

Closer Look

Examining the Reliability of the Public Switched Telephone Network

Fifty years ago, nearly 100 percent of all telephone circuits extended from a telephone utility company wire center directly to a subscriber's premises. The telephone company wire center typically had standby power supplies that would supply power for at least 72 hours on loss of primary power. Today, the PSTN serves many locales through field-located (sometimes called field-deployed) equipment that may have only 8 hours of standby power. Thus, the anticipated level of reliability of the traditional PSTN has devolved as the telephone utility companies have introduced new "pair sharing" technologies.

A number of other service providers, including, but not limited to, broadband service providers, cable service providers, and others, have joined public telephone company utilities in providing telephone service to subscribers. The majority of these service providers use MFVNs to provide a subscriber with a telephone circuit that has the operational equivalency of the traditional PSTN. In many areas of the United States, the public telephone utility company itself provides the PSTN using an MFVN.

Not all alternative phone service providers use MFVNs. Some providers use methods that might not have the same rigorous standards and practices as the methods employed by an MFVN. For example, some deployments of voice over Internet protocol (VoIP) systems have been reported to provide an inconsistent level of service equivalent to that of the traditional PSTN or an MFVN. Any time a facility changes phone service providers, best practice would dictate that a qualified person test the alarm system to make certain it can transmit signals to the supervising station successfully.

The DACT connects to the MFVN so that it can seize the line to which it is connected. This seizure disconnects any private telephone equipment beyond the DACT's point of connection and gives the DACT control over the line at all times. Connection to a dedicated phone line is not required, but the connection must be to a loop start telephone line (circuit). This permits the DACT to monitor the continuity of the line from the protected premises to the first piece of telephone utility equipment.

On a loop start telephone line, the MFVN continuously supplies voltage, normally 48 VDC, from the telephone utility wire center or from field-located pair sharing terminal equipment where the individual line originates. A connected DACT can monitor the integrity of the connected line by reading this constant voltage. The vast majority of residential telephone connections use loop start lines.

In contrast, almost all business telephone connections, particularly those employing PBX connections, use ground start lines. To obtain dial tone and operating power on a ground start line, the user equipment momentarily connects one side of the line to earth ground. Because the public telephone utility does not supply voltage to an idle ground start line, the DACT cannot use the presence of voltage to monitor the integrity of the ground start line, as it can with a loop start line.

Functionally, a DACT can signal over a ground start line and frequently does so when used as part of a burglar alarm system. However, the DACT can only monitor a loop start line for integrity.

Each DACT must connect to its own loop start telephone line and an accepted alternate transmission technology in accordance with 26.6.4.1.4(A). Use of the same telephone line for several DACTs in a campus-style arrangement is not acceptable.

Δ **26.6.4.1.2 Signal Verification.** All information exchanged between the DACT at the protected premises and the digital alarm communicator receiver (DACR) at the supervising or subsidiary station shall comply with 26.6.4.1.2.1 and 26.6.4.1.2.2.

N **26.6.4.1.2.1** Information exchanged shall be by digital code or some other approved means.

N **26.6.4.1.2.2** Signal verification shall be by signal repetition, digital parity check, or other approved means.

The functional requirements of 26.6.4.1.2.1 rule out the use of an analog voice tape dialer or digital voice dialer to transmit fire alarm signals. Such a device dials a predetermined phone number and then plays a voice message such as, "There is a fire at 402 Spruce Street." Over the years, officials have reported many cases where a voice tape dialer has malfunctioned and endlessly repeated its message, tying up a vital emergency telephone line in a communications center. The Code strictly forbids the use of analog or digital voice tape dialers.

Paragraph 26.6.4.1.2.2 also requires the DACT and DACR to use a method to verify the transmission of digital data.

26.6.4.1.3* Requirements for DACTs.

(A) A DACT shall be configured so that, when it is required to transmit a signal to the supervising station, it shall seize the telephone line (going off-hook) at the protected premises and disconnect an outgoing or incoming telephone call and prevent use of the telephone line for outgoing telephone calls until signal transmission has been completed. A DACT shall not be connected to a party line telephone facility.

(B) A DACT shall have the means to satisfactorily obtain a dial tone, dial the number(s) of the DACR, obtain verification that the DACR is able to receive signals, transmit the signal, and receive acknowledgment that the DACR has accepted that signal. In no event shall the time from going off-hook to on-hook exceed 90 seconds per attempt.

Paragraph 26.6.4.1.3(B) describes the normal sequence of operation for a DACT. On initiation of an alarm, supervisory, or trouble signal, the DACT seizes the line, obtains a dial tone, dials the number of the DACR, receives a handshake signal from the DACR, transmits its data, receives an acknowledgment signal — sometimes called the *kiss-off signal* — from the DACR, and hangs up. Each attempt of this call and verification sequence must take no longer than 90 seconds to complete.

Under typical circumstances, the successful transmission of a signal should occur on the first attempt well within the permitted 90 seconds. However, under the most adverse conditions such as a widespread prolonged power failure, a telephone central office going down, unusual weather condition, and so forth, more than one attempt may be needed for a successful transmission. See 26.6.4.1.3(C), its related annex material, and the accompanying FAQ.

(C)* A DACT shall have means to reset and retry if the first attempt to complete a signal transmission sequence is unsuccessful. A failure to complete connection shall not prevent subsequent attempts to transmit an alarm where such alarm is generated from any other initiating device circuit or signaling line circuit, or both. Additional attempts shall be made until the signal transmission sequence has been completed, up to a minimum of 5 and a maximum of 10 attempts.

(D) If the maximum number of attempts to complete the sequence is reached, an indication of the failure shall be made at the premises.

A.26.6.4.1.3 To give the DACT the ability to disconnect an incoming call to the protected premises, telephone service should be of the type that provides for timed-release disconnect. In some telephone systems (step-by-step offices), timed-release disconnect is not provided.

To ensure reliability for transmission of fire alarm, supervisory, and trouble signals, 26.6.4.1.3 and its related annex recommendation give the DACT exclusive control over the telephone line to which it is connected.

A.26.6.4.1.3(C) A DACT can be programmed to originate calls to the DACR telephone lines (numbers) in any alternating sequence. The sequence can consist of single or multiple calls to one DACR telephone line (number), followed by transmissions on the alternate path or any combination thereof that is consistent with the minimum/maximum attempt requirements in 26.6.4.1.3(C).

FAQ

Why does the Code limit the number of attempts to complete a signal transmission sequence to 10?

The DACT, as described in 26.6.4.1.3(C), must make at least five attempts to complete the sequence. However, the DACT must not make more than 10 attempts, so that a malfunctioning DACT does not tie up one of the lines connected to the DACR by making an unlimited number of repeated calls. Under the most adverse circumstances, in which the DACT finally completes a transmission on the last, or tenth, attempt, at a maximum of 90 seconds per attempt [see 26.6.4.1.3(B)], nearly 900 seconds, or 15 minutes, could have elapsed.

Since a DACT is no longer permitted to use two telephone lines except under certain scenarios, the second permitted pathway would be a different technology as required by 26.6.4.1.4(A), which may aid in obtaining a successful handshake with DACR equipment.

26.6.4.1.4 Transmission Channels.

Δ **(A)** A system employing a DACT shall employ a single telephone line (number) and one of the following transmission means:

(1) One-way private radio alarm system

(2) Two-way RF multiplex system

(3) Transmission means complying with 26.6.3

(4) A second telephone line (number), where all of the following are met:

(a) Access to one of the technologies in (1), (2), or (3) is not available at the protected premises.

(b) The authority having jurisdiction approves the arrangement.

(c) The DACT is programmed to call a second DACR line (number) when the signal transmission sequence to the first called line (number) is unsuccessful.

(d) The DACT is capable of selecting the operable means of transmission in the event of failure of the other means.

(e) Each telephone line is tested in accordance with 26.6.4.1.4(B) or at alternating 6-hour intervals.

Paragraph 26.6.4.1.4 provides the DACT with two reasonably reliable means of connecting to the DACR. Note that the Code has no jurisdiction over utility-provided services such as telephone services. Thus, the Code must rely on the traditionally accepted inherent reliability of all such utility-provided services. See also the commentary and the Closer Look feature following A.26.6.4.1.1.

Due to the decreased reliability of both traditional and MFVN-based PSTNs, this does not permit the use of a second telephone line (number) as the second transmission means for a DACT. Several of the other transmission choices are not included either because they are no longer available or were

never used, such as derived local channel, integrated services digital network (ISDN), and private microwave radio. The traditional cell phone service that had to dial a number is also not permitted. However, digital cellular radio using ubiquitous 2G, 3G, 4G, and 5G wireless networks is capable of meeting the performance-based requirements of 26.6.3.

System Design Tip

The distinction between a DACS that meets the requirements of 26.6.4 and a system using performance-based technology that meets the requirements of 26.6.3 is particularly important for designers and authorities having jurisdiction to understand. In many cases, this second system employs a listed DACT connecting to a listed module (sometimes called an IP communicator) that transmits as a packet switched network through an IP broadband data connection to the Internet. See the commentary following Section 26.6. Both systems must comply with the distinct requirements of the applicable section of the Code. The requirements of 26.6.4 do not need to be applied to systems addressed under the requirements of 26.6.3 even though they may employ a listed module interfacing with a listed DACT. The equipment manufacturer's published instructions are required to be followed in these situations, in addition to the requirements of 26.6.3.

It is estimated that the migration to performance-based technologies will continue until the vast majority of DACTs use IP broadband data communications technology or a yet-to-be-developed equivalent.

(B) The following requirements shall apply to all combinations listed in 26.6.4.1.4(A):

(1) The means for supervising each channel shall be in a manner approved for the method of transmission employed.

(2) If a signal has not been processed over the subject channel in the previous 6 hours, a test signal shall be processed.

Note the additional testing and reporting requirements in 26.6.4.1.5(8) for call forwarded lines. See 26.6.4.1.4(A).

(3) The failure of either channel shall send a trouble signal on the other channel within 4 minutes.

As important as monitoring the integrity of the transmission means is, avoiding nuisance trouble signals is equally important. The permissible 4-minute delay in transmitting a trouble signal in 26.6.4.1.4(B)(3) permits momentary, or even somewhat longer, interruptions in the transmission path, such as might occur during a storm.

(4) When one transmission channel has failed, all status change signals shall be sent over the other channel.

(5) The primary channel shall be capable of delivering an indication to the DACT that the message has been received by the supervising station.

A one-way radio alarm system transmits only from a protected premises to a supervising station and has no means of receiving a signal at the protected premises from the supervising station. For this reason, the requirement in 26.6.4.1.4(B)(5) would not be able to be met. Thus, the one-way radio alarm system cannot serve as the primary transmission means.

(6)* Unless the primary channel is known to have failed, the first attempt to send a status change signal shall use the primary channel.

(7) Simultaneous transmission over both channels shall be permitted.

(8) Failure of telephone lines (numbers) shall be annunciated locally.

A.26.6.4.1.4(B)(6) Where two telephone lines (numbers) are used, care should be taken to assign the primary DACT telephone line (number) to a nonessential telephone line (number) at the protected premises so that the primary line used in the premises is not unnecessarily interrupted.

Two telephone lines (numbers) are only permitted by 26.6.4.1.4(A)(4) with the specific approval of the authority having jurisdiction.

26.6.4.1.5 DACT Transmission Means. The following requirements shall apply to all DACTs:

(1) A DACT shall be connected to two separate means of transmission at the protected premises so that a single point of failure on one means of transmission shall not affect the second means of transmission.
(2) The DACT shall be capable of selecting the operable means of transmission in the event of failure of the other means.

Paragraph 26.6.4.1.5(1) clarifies that a single point of failure cannot affect both means of transmission.

If the DACT detects that one of the two transmission means has failed (e.g., from loss of voltage on a wire line), the DACT must switch to the other operable means. The DACT must also transmit a trouble signal over the other communications means. See Exhibit 26.13 for typical connection methods to a DACT. Note that in this exhibit two telephone lines are used, which would be permitted only for existing systems or for new systems where 26.6.4.1.4(A)(4) is used.

(3) The primary means of transmission shall be a telephone line (number) connected to a managed facilities-based voice network.
(4)* The first transmission attempt shall utilize the primary means of transmission.
(5) Each DACT shall be programmed to call a second receiver when the signal transmission sequence to the first called line (number) is unsuccessful.
(6) Each transmission means shall automatically initiate and complete a test signal transmission sequence to its associated receiver at least once every 6 hours.

EXHIBIT 26.13

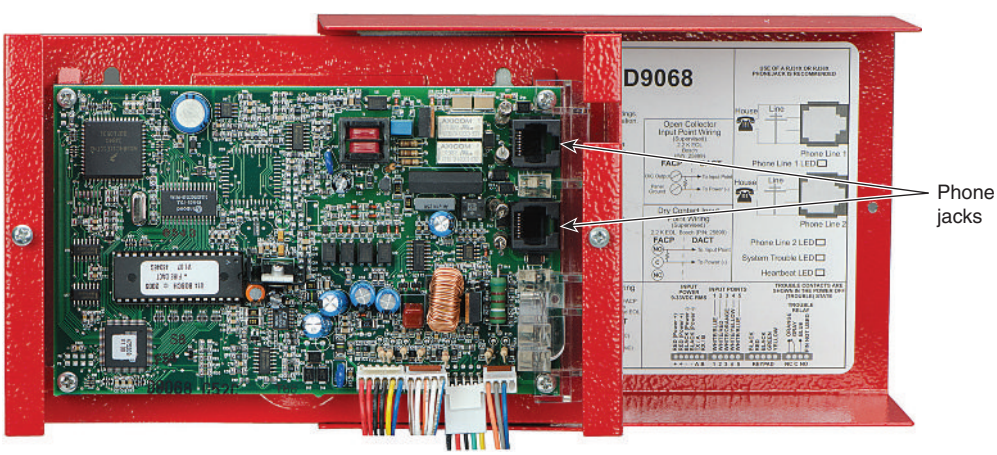

DACT Showing Two Phone Line Connections. (Source: Bosch Security Systems, Inc., Fairport, NY)

(7) A successful signal transmission sequence of any other type, within the same 6-hour period, shall fulfill the requirement to verify the integrity of the reporting system, provided that signal processing is automated so that 6-hour delinquencies are individually acknowledged by supervising station personnel.

The requirements of 26.6.4.1.5(6) and (7) were codified in a single paragraph [26.6.4.1.5(6)] in the 2016 edition. In accordance with NFPA's *Manual of Style*, the text was divided into two paragraphs so that there is only one requirement per paragraph.

Paragraph 26.6.4.1.5(7) permits any successful signal transmission within a 6-hour period to satisfy the pathway supervision requirements so long as a delinquency is automatically annunciated for the supervising station operator and that the delinquency requires an acknowledgment by the operator.

(8)* If a DACT is programmed to call a telephone line (number) that is call forwarded to the line (number) of the DACR, a means shall be implemented to verify the integrity of the call forwarding feature every 4 hours.

A.26.6.4.1.5(4) Where two telephone lines (numbers) are used, care should be taken to assign the primary DACT telephone line (number) to a nonessential telephone line (number) at the protected premises so that the primary line used in the premises is not unnecessarily interrupted.

Two telephone lines (numbers) are only permitted by 26.6.4.1.4(A)(4) with the specific approval of the authority having jurisdiction.

The term *nonessential* in A.26.6.4.1.5(4) does not mean "seldom used." Rather, it means a telephone line that likely would not be used during an emergency. When a DACT must transmit a signal, it seizes the telephone line and disconnects any telephone subsets downstream of the DACT. Thus, a telephone line that would be needed during an emergency should not be connected to a DACT as the primary means of transmission.

On the other hand, it is preferable to connect a DACT to a telephone line that has some usage during a normal day. That way, a user of the telephone line likely would detect and then report any trouble on that line. If a telephone line were assigned exclusively to a DACT, detection and reporting of trouble on the line would occur only during an attempted transmission of the 6-hour test signal.

FAQ How often must a DACT initiate a signal?

A DACT must initiate a signal using each transmission means at least once every 6 hours to verify the end-to-end integrity of the DACS [see 26.6.4.1.5 (6)]. If the receiving or processing equipment at the supervising station has sufficient intelligence to keep track of signal traffic automatically, any incoming signal from a particular DACT may satisfy this requirement, as long as the receiver receives one signal for each transmission means during every 6-hour period. Also see the commentary following 26.6.4.1.4(B)(2).

A.26.6.4.1.5(8) Because call forwarding requires equipment at a telephone company central office that could occasionally interrupt the call forwarding feature, a signal should be initiated whereby the integrity of the forwarded telephone line (number) that is being called by DACTs is verified every 4 hours. This can be accomplished by a single DACT, either in service or used solely for verification, that automatically initiates and completes a transmission sequence to its associated DACR every 4 hours. A successful signal transmission sequence of any other type within the same 4-hour period should be considered sufficient to fulfill this requirement.

Call forwarding should not be confused with WATS or 800 service. The latter, differentiated from the former by dialing the 800 prefix, is a dedicated service used mainly for its toll-free feature; all calls are preprogrammed to terminate at a fixed telephone line (number) or to a dedicated line.

Occasionally, a supervising station will maintain one or more telephone numbers in a local calling area that the telephone equipment will call forward to another number connected to the DACR. When the supervising station employs this practice, the station must verify the integrity of the call forward instruction every 4 hours to satisfy the requirement of 26.6.4.1.5(8). With the 24-hour test requirement, which was used before the 2013 edition, the supervising station could accomplish this by having the service technicians coordinate the programming of the automatic daily test signal from six of the DACTs in the service area that used the call forwarded number. This arrangement allowed one of the six DACTs to initiate its test signal every 4 hours during a 24-hour period. The 6-hour test requirement requires only two of the DACTs in the service area using the call forwarded number to schedule their test signal transmissions 4 hours apart.

When a supervising station takes over the subscribers from another supervising station, common practice uses call forwarding to prevent having to reprogram new telephone numbers into the DACT at each protected premises. A series of acquisitions can create the situation in which a subscriber's DACT dials a telephone number that may be call forwarded several times before reaching the current supervising station. The requirement to verify the call forwarding every 4 hours helps ensure continuity of service.

26.6.4.2 Digital Alarm Communicator Receiver (DACR).

26.6.4.2.1 Equipment.

Δ **(A)** Spare DACRs shall be provided in the supervising or subsidiary station.

The presence of a spare DACR does not by itself satisfy the requirements of 26.6.4.2.1(A). The spare unit must either be continuously online or be capable of being switched into place within 30 seconds of the failure. To meet the switching requirement in 26.6.4.2.1(B), someone must provide adequate written instructions and train the personnel on duty in the supervising station to accomplish the switchover. Preferably, the connections to the unit should terminate in a manner that permits rapid, error-free reconnection to the spare unit. For example, multiple telephone line connections could terminate in a single plug and jack assembly that would permit rapid disconnection and rapid reconnection to the second unit.

N **(B)** Spare DACRs shall be online or able to be switched into the place of a failed unit within 30 seconds after detection of failure.

(C) One spare DACR shall be permitted to serve as a backup for up to five DACRs in use.

(D) The number of incoming telephone lines to a DACR shall be limited to eight lines, unless the signal-receiving, processing, display, and recording equipment at the supervising or subsidiary station is duplicated and a switchover is able to be accomplished in less than 30 seconds with no loss of signal during this period, in which case the number of incoming lines to the unit shall be permitted to be unlimited.

Under most circumstances, a maximum of eight incoming lines are permitted to connect to a single DACR, which helps prevent overloading a DACR's ability to receive and process signals promptly. However, some fully automated supervising station facilities may provide duplicate equipment arranged to complete a switchover within 30 seconds of detection of a failure with no loss of signals. In most cases, to accomplish this switchover, the supervising station provides a "hot" standby.

A hot standby simultaneously receives all of the same signals received by the primary unit for which it provides standby coverage. If the primary unit fails, the standby unit simply takes over in place of the primary.

In a few cases in which a supervising station receives thousands of signals from a wide geographic area, the supervising station operating company has provided fully operational duplicate receiving and processing equipment at two remote locations. All signals are received at both locations. Failure of the equipment at either location is totally transparent to the receipt and processing of incoming signals. No signals are ever lost.

26.6.4.2.2 Transmission Channels.

Δ **(A)*** The DACR equipment at the supervising or subsidiary station shall be connected to a minimum of two separate incoming telephone lines (numbers).

N **(B)** The lines (numbers) shall have the following characteristics:

(1) If the lines (numbers) are in a single hunt group, they shall be individually accessible; otherwise, separate hunt groups shall be required.

(2) The lines (numbers) shall be used for no other purpose than receiving signals from a DACT.

(3) The lines (numbers) shall be unlisted.

(C) The failure of any telephone line (number) connected to a DACR due to loss of line voltage shall be annunciated visually and audibly in the supervising station.

FAQ How can telephone lines connected to a DACR be monitored for integrity?

The DACR must connect to loop start telephone lines with voltage normally present. The DACR will monitor this voltage to ensure an operable line, extending from the supervising station to the first public telephone utility wire center or first public telephone utility field-located pair sharing terminal equipment.

On a loop start telephone line, the public telephone utility continuously supplies voltage from the telephone utility wire center where the line originates. A connected DACR can monitor the integrity of the connected line by reading this constant voltage. The vast majority of residential telephone connections use loop start lines.

In contrast, almost all business telephone connections, particularly those employing PBX connections, use ground start lines. To obtain dial tone and operating power on a ground start line, the user equipment momentarily connects one side of the line to earth ground. Because the public telephone utility does not supply voltage to an idle ground start line, the DACR cannot use the presence of voltage to monitor the integrity of the ground start line, as it can with a loop start line.

Functionally, a DACR can receive signals over a ground start line. However, the DACR can only monitor a loop start line for integrity. See 26.6.4.2.2(C).

The same issues discussed in the commentary following A.26.6.1 and A.26.6.4.1.1, relating to the provider of telephone service, apply to the supervising station.

Δ **(D)*** The loading capacity for a hunt group shall be capable of demonstrating a 90 percent probability of immediately answering an incoming call or be in accordance with Table 26.6.4.2.2(D) and the following:

(1) Table 26.6.4.2.2(D) shall be based on an average distribution of calls and an average connected time of 30 seconds for a message.

(2) The loading figures in Table 26.6.4.2.2(D) shall presume that the lines are in a hunt group (i.e., DACT is able to access any line not in use).
(3) A single-line DACR shall not be allowed for any of the configurations shown in Table 26.6.4.2.2(D).

TABLE 26.6.4.2.2(D) *Loading Capacities for Hunt Groups*

	Number of Lines in Hunt Group				
System Loading at the Supervising Station	***1***	***2***	***3***	***4***	***5–8***
With DACR lines processed in parallel					
Number of initiating circuits	NA	5,000	10,000	20,000	20,000
Number of DACTs	NA	500	1,500	3,000	3,000
With DACR lines processed serially (put on hold, then answered one at a time)					
Number of initiating circuits	NA	3,000	5,000	6,000	6,000
Number of DACTs	NA	300	800	1,000	1,000

NA: Not allowed.

(E) Each supervised burglar alarm (open/close) or each suppressed guard's tour transmitter shall reduce the allowable DACTs as follows:

(1) Up to a four-line hunt group, by 10
(2) Up to a five-line hunt group, by 7
(3) Up to a six-line hunt group, by 6
(4) Up to a seven-line hunt group, by 5
(5) Up to an eight-line hunt group, by 4

(F) Each guard's tour transmitter shall reduce the allowable DACTs as follows:

(1) Up to a four-line hunt group, by 30
(2) Up to a five-line hunt group, by 21
(3) Up to a six-line hunt group, by 18
(4) Up to a seven-line hunt group, by 15
(5) Up to an eight-line hunt group, by 12

(G) A signal shall be received on each individual incoming DACR line at least once every 6 hours.

The requirements of 26.6.4.2.2(G) relate to those in 26.6.4.1.5(6). At least once every 6 hours, each DACT must initiate a signal to verify the end-to-end integrity of the DACS for each of the transmission means used. If the receiving or processing equipment at the supervising station has sufficient intelligence to keep track of signal traffic automatically, any incoming signal from a particular DACT may satisfy this requirement, as long as the receiver receives one signal for each transmission means during every 6-hour period. In addition, the manufacturer of the particular DACT must have designed this feature into the unit so that the unit knows it has transmitted the signals successfully within the 6-hour period following the previous test signals. Also refer to the commentary following 26.6.4.1.4(B)(2).

(H) The failure to receive a test signal from the protected premises shall be treated as a trouble signal.

FAQ What is the purpose of the 6-hour test signals?

The 6-hour test signals serve to verify the end-to-end functioning of the system. The test signals monitor the integrity of the system and guard against the loss of the telephone line and the second transmission means connected to the DACT. The signals may also detect the malfunctioning of an entire hunt group at the DACR. In large supervising stations, the computer-based automation system often oversees the test signals. Small supervising stations might use a manual logging system to keep track of the test signals.

A.26.6.4.2.2(A) The timed-release disconnect considerations as outlined in A.26.6.4.1.3 apply to the telephone lines (numbers) connected to a DACR at the supervising station.

It might be necessary to consult with appropriate telephone service personnel to ensure that numbers assigned to the DACR can be individually accessed even where they are connected in rotary (a hunt group).

The hunt groups provided by some old public telephone utility central office equipment may have the potential for locking onto a defective line, an action that would disable all lines in the hunt group. The requirements in 26.6.4.2.2(A) ensure that the design of the DACS receiving network has as high a degree of reliability as possible.

A.26.6.4.2.2(D) In determining system loading, Table 26.6.4.2.2(D) can be used, or it should be demonstrated that there is a 90 percent probability of incoming line availability. Table 26.6.4.2.2(D) is based on an average distribution of calls and an average connected time of 30 seconds per message. Therefore, where it is proposed to use Table 26.6.4.2.2(D) to determine system loading, if any factors are disclosed that could extend DACR connect time so as to increase the average connect time, the alternate method of determining system loading should be used. Higher (or possibly lower) loadings might be appropriate in some applications.

(1) Some factors that could increase (or decrease) the capacity of a hunt group are as follows:
   (a) Shorter (or longer) average message transmission time can influence hunt group capacity.
   (b) The use of audio monitoring (listen-in) slow-scan video or other similar equipment can significantly increase the connected time for a signal and reduce effective hunt group capacity.
   (c) The clustering of active burglar alarm signals can generate high peak loads at certain hours.
   (d) Inappropriate scheduling of 6-hour test signals can generate excessive peak loads.

(2) Demonstration of a 90 percent probability of incoming line availability can be accomplished by the following in-service monitoring of line activity:
   (a) Incoming lines are assigned to telephone hunt groups. When a DACT calls the main number of a hunt group, it can connect to any currently available line in that hunt group.
   (b) The receiver continuously monitors the "available" status of each line. A line is available when it is waiting for an incoming call. A line is unavailable for any of the following reasons:

i. Currently processing a call
ii. Line in trouble
iii. Audio monitoring (listen-in) in progress
iv. Any other condition that makes the line input unable to accept calls

(c) The receiver monitors the "available" status of the hunt group. A hunt group is available when any line in it is available.

(d) A message is emitted by the receiver when a hunt group is unavailable for more than 1 minute out of 10 minutes. This message references the hunt group and the degree of overload.

System Design Tip

The loading of a DACR helps to determine the reliability of a DACS. System designers have two options to determine loading capacity: (1) using Table 26.6.4.2.2(D), or (2) ensuring 90 percent probability of a call being answered immediately. Large-capacity supervising stations that employ a computerized automation system to oversee the handling of signals normally use the second option. Such a system can monitor traffic and report the probability of a call being immediately answered by means of an automatic and real-time–generated report.

As loading increases with the addition of new customers, management of the supervising station may refer to the statistical analysis in that automatic report. They can use the details to determine when they must add equipment or take other action to maintain the necessary immediate answering capability.

26.6.5 Radio Systems.

26.6.5.1 Two-Way Radio Frequency (RF) Multiplex Systems.

A two-way radio frequency (RF) multiplex system consists of a traditional multiplex fire alarm system that uses a licensed two-way radio system to receive interrogation signals from the supervising station to the protected premises and to transmit signals from the protected premises to the supervising station. Essentially, the multiplex-based interrogation and response fire alarm system operates transparently over the radio portion of the system.

These systems must use licensed two-way radio because of the restrictions that current FCC regulations place on the number of times in a 1-hour period that an unlicensed radio transmitter may transmit information. In addition, the FCC has set aside a portion of the radio spectrum for use by radio telemetry applications. The use of licensed radio to transmit fire alarm, supervisory, and trouble signals falls within the definition of radio telemetry.

The requirements for two-way RF multiplex systems are essentially identical to those used for legacy active multiplex systems in previous editions.

26.6.5.1.1 Maximum Operating Time. The maximum end-to-end operating time parameters allowed for a two-way RF multiplex system shall be as follows:

(1) The maximum allowable time lapse from the initiation of a single alarm signal until it is recorded at the supervising station shall not exceed 90 seconds. When any number of subsequent alarm signals occur at any rate, they shall be recorded at a rate no slower than one every additional 10 seconds.

Two-way RF multiplex systems are required to complete an interrogation and response sequence for each protected premises interface transceiver (transmitter/receiver) at least every 90 seconds. Any change of status that would indicate a fire alarm condition would transmit within this time frame.

System Design Tip

As an alternative, the system may provide some other means to ensure alarm receipt within the specified time. For example, a designer could devise equipment that immediately transmits alarm signals from any two-way RF multiplex interface transceiver at the protected premises, regardless of what point the system has reached in its normal 90-second interrogation and response sequence.

(2) The maximum allowable time lapse from the occurrence of an adverse condition in any transmission channel until recording of the adverse condition is started shall not exceed 200 seconds for Type 4 and Type 5 systems. The requirements of 26.6.5.1.4 shall apply.

This ensures that, as a part of the interrogation and response sequence for each protected premises, any change of status that would indicate an adverse condition would transmit within a time frame of at least every 200 seconds for both Type 4 and Type 5 two-way RF multiplex systems.

(3) In addition to the maximum operating time allowed for alarm signals, the requirements of one of the following shall be met:

(a) A system unit that has more than 500 initiating device circuits shall be able to record not less than 50 simultaneous status changes within 90 second

(b) A system unit that has fewer than 500 initiating device circuits shall be able to record not less than 10 percent of the total number of simultaneous status changes within 90 seconds.

The requirements in 26.6.5.1.1 establish that the portion of the two-way RF multiplex system that processes and records status changes can do so with sufficient speed to handle a reasonable volume of signal traffic, based on the system's signal capacity.

26.6.5.1.2 Supervisory and Control Functions. Facilities shall be provided at the supervising station for the following supervisory and control functions of the supervising or subsidiary station and the repeater station radio transmitting and receiving equipment, which shall be accomplished via a supervised circuit where the radio equipment is remotely located from the system unit:

(1) RF transmitter in use (radiating)
(2) Failure of ac power supplying the radio equipment
(3) RF receiver malfunction
(4) Indication of automatic switchover
(5) Independent deactivation of either RF transmitter controlled from the supervising station

The supervisory functions described help to ensure continuity of signal transmission between the protected premises and the supervising station.

26.6.5.1.3 Transmission Channel.

(A) The RF multiplex transmission channel shall terminate in an RF transmitter/receiver at the protected premises and in a system unit at the supervising or subsidiary station.

Δ **(B)** Operation of the transmission channel shall conform to the requirements of this Code whether channels are private facilities, such as microwave, or leased facilities furnished by a communications utility company.

N **(C)** If private signal transmission facilities are used, the equipment necessary to transmit signals shall also comply with requirements for duplicate equipment or replacement of critical components, as described in 26.6.6.3.

FAQ What is the purpose of the requirements of 26.6.5.1.3(B) and (C)?

The requirements help make sure that the system complies with the requirements of the Code, even if the facilities are leased from a communications utility company. The paragraph also requires either redundant critical assemblies or replacement with on-premises spares to help maintain continuity of operations. Either action must restore service within 30 minutes. See 26.6.3.6 and 26.6.6.3.

26.6.5.1.4* Categories. Two-way RF multiplex systems shall be divided into Type 4 or Type 5 classifications based on their ability to perform under adverse conditions.

(A) A Type 4 system shall have two or more control sites configured as follows:

(1) Each site shall have an RF receiver interconnected to the supervising or subsidiary station by a separate channel.

(2) The RF transmitter/receiver located at the protected premises shall be within transmission range of at least two RF receiving sites.

(3) The system shall contain two RF transmitters that are one of the following:

(a) Located at one site with the capability of interrogating all of the RF transmitters/receivers on the premises

(b) Dispersed with all of the RF transmitters/receivers on the premises having the capability to be interrogated by two different RF transmitters

(4) Each RF transmitter shall maintain a status that allows immediate use at all times. Facilities shall be provided in the supervising or subsidiary station to operate any off-line RF transmitter at least once every 8 hours.

(5) Any failure of one of the RF receivers shall in no way interfere with the operation of the system from the other RF receiver. Failure of any receiver shall be annunciated at the supervising station.

(6) A physically separate channel shall be required between each RF transmitter or RF receiver site, or both, and the system unit.

(B) A Type 5 system shall have a single control site configured as follows:

(1) A minimum of one RF receiving site

(2) A minimum of one RF transmitting site

A.26.6.5.1.4 The intent of the plurality of control sites is to safeguard against damage caused by lightning and to minimize the effect of interference on the receipt of signals. The control sites can be co-located.

System Design Tip

With a two-way RF multiplex system, each protected premises has its own RF transceiver (transmitter/receiver) unit. The requirements for a Type 4 system essentially create a two-way RF multiplex system that has redundancy of critical components. A Type 4 two-way RF multiplex system must have a plurality of control sites. Each site contains an RF transceiver (transmitter/receiver) unit. An authority having jurisdiction or a system designer, expecting a high volume of traffic or unusual transient RF propagation problems, would use such a system.

The requirements for a Type 5 system provide for a minimum level of system integrity that would offer adequate service for most normal applications.

26.6.5.1.5 Loading Capacities.

(A) The loading capacities of two-way RF multiplex systems shall be based on the overall reliability of the signal receiving, processing, display, and recording equipment at the supervising or subsidiary station and the capability to transmit signals during adverse conditions of the transmission channels.

(B) Allowable loading capacities shall comply with Table 26.6.5.1.5(B).

TABLE 26.6.5.1.5(B) *Loading Capacities for Two-Way RF Multiplex Systems*

Trunks	***System Type***	
	Type 4	***Type 5***
Maximum number of alarm service initiating device circuits per primary trunk facility	5,120	1,280
Maximum number of leg facilities for alarm service per primary trunk facility	512	128
Maximum number of leg facilities for all types of alarm service per secondary trunk facility*	128	128
Maximum number of all types of initiating device circuits per primary trunk facility in any combination	10,240	2,560
Maximum number of leg facilities for types of alarm service per primary trunk facility in any combination*	1,024	256
System Units at the Supervising Station		
Maximum number of all types of initiating device circuits per system unit*	10,240	10,240
Maximum number of protected buildings and premises per system unit	512	512
Maximum number of alarm service initiating device circuits per system	5,120	5,120
Systems Emitting from Subsidiary Station†	—	—

*Includes every initiating device circuit (e.g., waterflow, alarm, supervisory, guard, burglary, hold-up).

†Same as system units at the supervising station.

The loading of a two-way RF multiplex system depends on the capability of the type of system. Because a Type 4 system has a redundant transceiver (transmitter/receiver) exerting control over the interrogation and response sequence between the protected premises and the supervising station, it has the greatest permitted system loading. A Type 5 system does not have redundant transceivers in control of the system, so it has a more limited trunk capacity.

(C) The capacity of a system unit shall be permitted to be unlimited if the signal-receiving, processing, display, and recording equipment are duplicated at the supervising station and a switchover is able to be accomplished in not more than 30 seconds, with no loss of signals during this period.

These requirements modify the lower half of Table 26.6.5.1.5(B). However, to meet these requirements, a two-way RF multiplex system must employ complete redundancy of all critical components and complete a switchover in 30 seconds with no loss of signals.

Systems that meet these requirements generally process all incoming signals in tandem, that is, both the main unit and the standby unit process incoming signals at all times. When the main unit fails, the standby unit continues to function normally. Operators would change over only those incidental peripheral devices that have no required redundancy.

26.6.5.1.6 Adverse Conditions.

Δ **(A)** The occurrence of an adverse condition on the transmission channel between a protected premises and the supervising station that prevents the transmission of any status change signal shall be automatically indicated and recorded at the supervising station.

N **(B)** The indication and recording of the adverse condition shall identify the affected portions of the system so that the supervising station operator will be able to determine the location of the adverse condition by trunk or leg facility, or both.

Interrogation and response transmission, back and forth along the communications path, monitors the integrity of two-way RF multiplex transmission technology. The satisfactory exchange of data ensures that all trunks and legs remain operational. If the system does not successfully complete an interrogation and response sequence, an unsuccessful sequence can indicate the possible failure of a trunk or a leg. In such a case, 26.6.5.1.6(A) requires the system to notify the supervising station and provide sufficient detail to allow prompt troubleshooting and repair of the trunk or leg. This adverse condition must be indicated as a trouble signal as required by 10.15.1.

Δ **(C)** For two-way RF multiplex systems that are part of a central station alarm system, restoration of service to the affected portions of the system shall be automatically recorded.

N **(D)** When service is restored ,to a two-way RF multiplex system, the first status change of any initiating device circuit, any initiating device directly connected to a signaling line circuit, or any combination thereof that occurred at any of the affected premises during the service interruption also shall be recorded.

Two-way RF multiplex systems that serve a central station service system not only must automatically record restoration of interrupted service but must also report the first status change on any connected initiating device circuit or any connected initiating device. For each connected initiating device circuit or any connected initiating device, the equipment at the protected premises must retain the signal during a transmission interruption and, on restoration of the transmission path, report the first status change that occurred during the transmission interruption.

26.6.5.2* One-Way Private Radio Alarm Systems.

The most common radio systems, one-way private radio alarm systems, use a single radio alarm transmitter (RAT) at a protected premises that transmits fire alarm, supervisory, and trouble signals from the protected premises to at least two radio alarm repeater station receivers (RARSRs). These RARSRs likely would be in different geographic locations, but they can also be at a single location, provided the antennas serving the receivers are adequately separated according to the manufacturer's installation instructions. Usually, they would be part of a network of multiple RARSRs at widely diverse geographic locations throughout a city, county, or other political subdivision. This network of RARSRs would connect through a suitable transmission path to the radio alarm supervising station receiver (RASSR).

As this one-way radio system does not have interrogation and response capability, the use of either multiple RARSRs or RASSRs would increase the likelihood that the single transmitter would transmit a signal successfully that could be received by the supervising station. In creating the network of RARSRs or RASSRs, engineers probably would conduct radio propagation studies to determine factors likely to influence the reception of signals from transmitters at various protected premises.

To create the requirements for an RF transmission system that does not have an interrogation and response sequence to monitor the integrity of the transmission of signals between the protected premises and the supervising station, these requirements borrowed heavily from the requirements for DACSs.

Exhibit 26.14 shows a radio alarm transmitter (RAT).

System Design Tip

EXHIBIT 26.14

Radio Alarm Transmitter (RAT). (Courtesy of Warren Olsen, FSCI-Elgin, IL)

A.26.6.5.2 Originally the concept of one-way private radio was codified for a one-way system requiring at least two receiving towers or repeaters. Other similar systems have been developed that use this basic principle. Among them is the concept of the "mesh network" where a premises transmitter can access multiple nearby transmitters.

It is difficult to reliably test redundant paths on a mesh radio network without significant impact on the system and considerable efforts of time and personnel.

A remedy is to have the mesh network system equipment generate a report at the protected premises or supervising station showing redundant pathways. Additionally, the mesh system equipment at the protected premises and at the supervising station periodically determine the number of viable redundant paths and generate a trouble signal whenever the number falls below two paths, as is required by 26.6.5.2.

The mesh network differs from the traditional one-way radio system in that it does not depend on two or more dedicated repeating station towers installed at fixed locations throughout a coverage area. Instead, the RATs at each protected premises serve the repeater function themselves. Since each RAT must be capable of receiving signals to retransmit them, a signal acknowledgment is also possible and is commonly used to improve the efficient use of available bandwidth. Also, transmitted power levels can often be reduced because a RAT need only be heard by several of its nearest neighbors instead of a typically more distant receiving tower. This reduces interference of signals when two or more RATs attempt to transmit simultaneously.

An alarm signal from a protected premises RAT is transmitted first to every neighboring RAT in range. The signal then proceeds in "hops" from neighbor to neighbor until reaching the supervising station. An efficient mesh, therefore, depends on a sufficient density of neighboring protected premises subscribing to the same network. Once built out, the mesh architecture provides a potentially enormous number of redundant paths, which will change dynamically as subscribers are added or removed, but the network will be self-healing and always able to find multiple redundant paths to the RASSR.

26.6.5.2.1 Independent Receivers.

FAQ

What type of network is most commonly used for a one-way private radio alarm system?

The requirements in 26.6.5.2.1 for a one-way private radio alarm system allow the use of either a private system operated by a single alarm service provider or a multiuser system operated by a one-way radio network provider. Most systems communicate through a multiuser network.

Paragraph 26.6.5.2.1(B) clarifies that a minimum of two separate paths must be provided from each RAT to the RASSR, although it is not uncommon on a developed, mature network that as many as eight paths may be present.

Paragraph 26.6.5.2.1(C) permits a RAT to transmit directly to a single RASSR, provided the RAT has the capability of receiving an acknowledgment that the RASSR has received the transmitted signal. Such an arrangement, of course, belies the descriptor "one-way" because communication would in fact take place in two directions, or two ways.

(A) The requirements of 26.6.5.2 for a radio alarm repeater station receiver (RARSR) shall be satisfied if the signals from each radio alarm transmitter (RAT) are received and supervised, in accordance with Chapter 26, by at least two independently powered, independently operating, and separately located RARSRs or radio alarm supervising station receivers (RASSRs), or by one of each.

(B) At least two separate paths shall be provided from a RAT to the ultimate RASSR.

(C) Only one path to the RASSR shall be required to be utilized in the event alarms can be transmitted from a RAT to the RASSR and the RAT has the ability to receive a positive acknowledgment that the RASSR has received the signal.

26.6.5.2.2* Maximum Operating Time. The end-to-end operating time parameters allowed for a one-way radio alarm system shall be as follows:

(1) There shall be a 90 percent probability that the time between the initiation of a single alarm signal until it is recorded at the supervising station will not exceed 90 seconds.

(2) There shall be a 99 percent probability that the time between the initiation of a single alarm signal until it is recorded at the supervising station will not exceed 180 seconds.

(3) There shall be a 99.999 percent probability that the time between the initiation of a single alarm signal until it is recorded at the supervising station will not exceed 7.5 minutes (450 seconds), at which time the RAT shall cease transmitting. When any number of subsequent alarm signals occurs at any rate, they shall be recorded at an average rate no slower than one every additional 10 seconds.

(4) In addition to the maximum operating time allowed for alarm signals, the system shall be able to record not less than 12 simultaneous status changes within 90 seconds at the supervising station.

(5) The system shall be supervised to ensure that at least two independent RARSRs or one RARSR and one independent RASSR are receiving signals for each RAT during each 24-hour period.

A.26.6.5.2.2 It is intended that each RAT communicate with two or more independently located RARSRs. The location of such RARSRs should be such that they do not share common facilities.

NOTE: All probability calculations required for the purposes of Chapter 17 should be made in accordance with established communications procedures, should assume the maximum channel loading parameters specified, and should further assume that 25 RATs are actively in alarm and are being received by each RARSR.

Because one-way private radio alarm systems do not have an interrogation and response sequence to verify the operating capability of the communications channel and the equipment associated with it, the system must rely on other means to achieve an acceptable level of operational integrity. The probabilities specified in 26.6.5.2.2(1), 26.6.5.2.2(2), and 26.6.5.2.2(3) help to ensure that level of integrity. To show compliance with the specified probabilities, the manufacturers of private radio alarm system equipment will perform a statistical analysis of system operation under conditions of maximum channel loading to derive the signal throughput probabilities mathematically.

In a true one-way system — where the RAT is not capable of receiving an acknowledgment of receipt of the transmitted signal to achieve the required probability of successful reception — a RAT will typically transmit the signal multiple times. The signal repetition may continue for an extended time not exceeding 7.5 minutes (450 seconds) according to 26.6.5.2.2(3).

In a mesh network type of system, the RAT is typically capable of receiving an acknowledgment of signal reception, and it will cease transmission as soon as an acknowledgment is received from any of its nearest neighbor RATs acting as RARSRs, which will then propagate the signal to the supervising station RASSR.

26.6.5.2.3 Supervision.

N **26.6.5.2.3.1** Equipment shall be provided at the supervising station for the supervisory and control functions of the supervising or subsidiary station and for the repeater station radio transmitting and receiving equipment.

N **26.6.5.2.3.2** A supervised circuit shall be provided where the radio equipment is remotely located from the system unit and the conditions of 26.6.5.2.3.2(A) through 26.6.5.2.3.2(C) are met.

(A) The following conditions shall be supervised at the supervising station:

(1) Failure of ac power supplying the radio equipment
(2) Malfunction of RF receiver
(3) Indication of automatic switchover, if applicable

(B) Interconnections between elements of transmitting equipment, including any antennas, shall be supervised either to cause an indication of failure at the protected premises or to transmit a trouble signal to the supervising station.

(C) Personnel shall be dispatched to arrive within 12 hours to initiate maintenance after detection of primary power failure.

The specified supervisory functions of 26.6.5.2.3.2(A) and the requirements of 26.6.5.2.3.2(B) help to ensure the continuity of signal transmission between the protected premises and the supervising station. Paragraph 26.6.5.2.3.2(B) addresses two serious points of potential failure: either the loss of the antenna or the loss of connection between the transmitter and the antenna.

In some systems, the transmitter connects directly to the antenna. In others, the installer situates the antenna at a point in the building more advantageous for successful transmission of a signal. The requirement in 26.6.5.2.3.2(B) helps make sure that a trouble signal resulting from the loss of the antenna or its connection will annunciate at least locally. The requirement for mechanical protection of cabling and wiring between the transmitter and the antenna was removed from the 2019 edition.

26.6.5.2.4 Transmission Channels. Transmission channels shall comply with 26.6.5.2.4(A) through 26.6.5.2.4(F).

(A) The one-way RF transmission channel shall originate with a RAT at the protected premises and shall terminate at the RF receiving system of an RARSR or RASSR capable of receiving transmissions from such transmitting devices.

(B) A receiving network transmission channel shall terminate at an RARSR at one end and with either another RARSR or an RASSR at the other end.

Paragraph 26.6.5.2.4(B) permits the overall system architecture necessary to develop a network that can handle a large number of RATs. The network interconnections can use multiple RARSRs that, in turn, repeat the received signals to other RARSRs until the signals ultimately reach a RASSR. Along each segment of the transmission path, at least two RARSRs must always receive the signal.

(C) Operation of receiving network transmission channels shall conform to the requirements of this Code whether channels are private facilities, such as microwave, or leased facilities furnished by a communications utility company.

Even if the installer leases facilities from a communications utility company or another one-way radio network service provider, the system must comply with the Code.

(D) If private signal transmission facilities are used, the equipment necessary to transmit signals shall also comply with requirements for duplicate equipment or replacement of critical components as described in 26.6.6.3.

This further ensures continuity of operations by requiring either redundant critical assemblies or an arrangement such that technicians can replace critical assemblies with on-premises spares and restore service within 30 minutes.

(E) The system shall provide information that indicates the quality of the received signal for each RARSR supervising each RAT in accordance with 26.6.5.2 and shall provide information at the supervising station when such signal quality falls below the minimum signal quality levels set forth in 26.6.5.2.

The system must monitor the quality of the transmitted signal, including the operating time parameters specified in 26.6.5.2.2.

FAQ What is one method used to achieve compliance with 26.6.5.2.4(E)?

System Design Tip

To accomplish the requirement of 26.6.5.2.4(E), one design provides each RAT with an internal clock. Each transmitted signal includes the time of first transmission and the current time, along with the alarm, supervisory, or trouble data. A software program connected to the RASSR can use the time information from each received signal to calculate a statistical analysis that verifies compliance with the time probability parameters of 26.6.5.2.2.

(F) Each RAT shall be installed in such a manner so as to provide a signal quality over at least two independent one-way RF transmission channels, of the minimum quality level specified, that satisfies the performance requirements in 26.6.2.3 and 26.6.6.

26.6.5.2.5 System Categories. One-way radio alarm systems shall be divided into two categories on the basis of the following number of RASSRs present in the system:

(1) A Type 6 system shall have one RASSR and at least two RARSRs.
(2) A Type 7 system shall have more than one RASSR and at least two RARSRs.
(3) In a Type 7 system, when more than one RARSR is out of service and, as a result, any RATs are no longer being supervised, the affected supervising station shall be notified.

(4) In a Type 6 system, when any RARSR is out of service, a trouble signal shall be annunciated at the supervising station.

A Type 6 one-way private radio alarm system serves a single supervising station. A Type 7 one-way private radio alarm system serves more than one supervising station. A multi-user one-way radio network used to connect one or more protected premises to a supervising station most closely fits the Type 7 system description.

26.6.5.2.6 Loading Capacities.

N **26.6.5.2.6.1** The loading capacities of one-way radio alarm systems shall be based on the overall reliability of the signal-receiving, processing, display, and recording equipment at the supervising or subsidiary station and the capability to transmit signals during adverse conditions of the transmission channels.

N **26.6.5.2.6.2** Loading capacities shall comply with 26.6.5.2.6.2(A) and 26.6.5.2.6.2(B).

(A) Allowable loading capacities shall be in accordance with Table 26.6.5.2.6.2(A), except as modified by the following:

(1) Each guard's tour transmitter shall reduce the allowable RATs by 15.
(2) Each supervised burglar alarm (open/close) or each suppressed guard's tour transmitter shall reduce the allowable RATs by 5.

TABLE 26.6.5.2.6.2(A) *Loading Capacities of One-Way Radio Alarm Systems*

	System Type	
Radio Alarm Repeater Station Receiver (RARSR)	***Type 6***	***Type 7***
Maximum number of fire alarm service initiating device circuits per RARSR	5,120	5,120
Maximum number of RATs for fire	512	512
Maximum number of all types of initiating device circuits per RARSR in any combination*	10,240	10,240
Maximum number of RATs for all types of fire alarm service per RARSR in any combination*	1,024	1,024
System Units at the Supervising Station		
Maximum number of all types of initiating device circuits per system unit*	10,240	10,240
Maximum number of fire-protected buildings and premises per system unit	512	512
Maximum number of fire alarm service initiating device circuits per system unit	5,120	5,120

*Includes every initiating device circuit (e.g., waterflow, fire alarm, supervisory, guard, burglary, hold-up).

(B) If the signal-receiving, processing, display, and recording equipment is duplicated at the supervising station and a switchover is able to be accomplished in not more than 30 seconds, with no loss of signals during this period, the capacity of a system unit shall be permitted to be unlimited.

Paragraph 26.6.5.2.6.2(B) modifies the requirements for system units at the supervising station given in Table 26.6.5.2.6.2(A). However, to meet these requirements, a one-way private radio alarm system must employ complete redundancy of all critical components and complete a switchover in 30 seconds with no loss of signals.

Systems that meet these requirements generally process all incoming signals in tandem; that is, both the main unit and the standby unit process incoming signals at all times. When the main unit fails, the standby unit continues to function normally. Operators would change over only those incidental peripheral devices that have no required redundancy.

26.6.5.2.7 Adverse Conditions. The system shall be supervised to ensure that at least two independent radio alarm repeater station receivers (RARSRs) are receiving signals for each radio alarm transmitter (RAT) during each 24-hour period.

(A) The occurrence of a failure to receive a signal by either RARSR shall be automatically indicated and recorded at the supervising station.
(B) The indication shall identify which RARSR failed to receive such supervisory signals.
(C) Received test signals shall not be required to be indicated at the supervising station.

The satisfactory receipt of at least one transmission every 24 hours by at least two independent RARSRs monitors the integrity of one-way radio transmission technology. If receivers do not receive such a signal, then 26.6.5.2.7(A) requires the system to notify the supervising station. This adverse condition must be indicated as a trouble signal as required by 10.15.1.

N **26.6.5.2.8 Wireless Mesh Networks (WMN).** A wireless mesh network utilizing listed components satisfies the requirements of 26.6.5.2.

Paragraph 26.6.5.2.8 has been added to the 2019 edition of the Code to clarify that wireless mesh networks satisfy the requirements for one-way private radio alarm systems. These systems are commonly used in the fire alarm industry and are recognized by listing agencies as satisfying the requirements of 26.6.5.2.

26.6.6 Display and Recording Requirements for All Transmission Technologies.

FAQ What does 26.6.6 specify?

Subsection 26.6.6 specifies the content and nature of the display and recording of signals received at a supervising station. The requirements take into account a reasonable quantity of signal traffic. They also consider certain ergonomic necessities for interfacing electronically reproduced signals with one or more human operators.

Δ **26.6.6.1*** Any status changes, including the initiation or restoration to normal of a trouble condition, that occur in an initiating device or in any interconnecting circuits or equipment, including the local protected premises controls from the location of the initiating device(s) to the supervising station, shall be presented in a form to expedite prompt operator interpretation.

A.26.6.6.1 The signal information can be permitted to be provided in coded form. Records can be permitted to be used to interpret these codes.

N **26.6.6.2** Status change signals shall provide the following information:

(1) Identification of the type of signal to show whether it is an alarm, supervisory, delinquency, or trouble signal
(2) Identification of the signal to differentiate between an initiation of an alarm, a supervisory, a delinquency, or a trouble signal and a clearing from one or more of these conditions

(3) Identification of the site of origin of each status change signal
(4)* Identification of specific types of signals that dictate a different response

A.26.6.6.2(4) Any signal that would dictate a different response, such as carbon monoxide alarms or mass notification alarms, should be individually identifiable so the appropriate response to the event can be initiated. There are more types of alarms and other signals that are being received at supervising stations and that require different responses by supervising station operators. These signals could be other than fire, but still life safety in nature, and must be uniquely identified because their signal is indicative of a different response.

26.6.6.3* If duplicate equipment for signal receiving, processing, display, and recording is not provided for supervising stations other than proprietary station systems, the installed equipment shall be designed so that any critical assembly is able to be replaced from on-premises spares.

A.26.6.6.3 An example of a critical assembly is an assembly in which a malfunction prevents the receipt and interpretation of signals by the supervising station operator.

Paragraph 26.6.6.3 was revised to move language to A.26.6.6.3. The example of a critical assembly is not a requirement. This requirement only applies to central supervising station systems and remote supervising station systems.

N **26.6.6.4*** The system shall be able to be restored to service within 30 minutes.

N **A.26.6.6.4** In order to expedite repairs, it is recommended that spare modules, such as printed circuit boards, displays, or printers, be stocked at the supervising station.

The requirements in 26.6.6.4 ensure that a technician will promptly repair any malfunction in a critical assembly, as defined in this paragraph. The technician may repair the defective assembly or, more often, replace the defective assembly with an on-premises spare. Any assembly too complex for a technician to repair readily requires a duplicate.

26.6.6.5* Any method of recording and display or indication of change of status signals shall be permitted, provided that the status signals are not test signals required by 26.6.4.1.5 at a DACR and all of the following conditions are met:

(1) Each change of status signal requiring action to be taken by the operator shall result in an audible signal and not less than two independent methods of identifying the type, condition, and location of the status change.
(2) Each change of status signal shall be automatically recorded. The record shall provide the type of signal, condition, and location, as required by 26.6.6.1, in addition to the time and date the signal was received.
(3) Failure of an operator to acknowledge or act upon a change of status signal shall not prevent subsequent alarm signals from being received, indicated or displayed, and recorded.
(4) Change of status signals requiring action to be taken by the operator shall be displayed or indicated in a manner that clearly differentiates them from those that have been acted upon and acknowledged.
(5) Each incoming signal to a DACR shall cause an audible signal that persists until manually acknowledged.

A.26.6.6.5 For all forms of transmission, the maximum time to process an alarm signal should be 90 seconds. The maximum time to process a supervisory signal should be 4 minutes.

The time to process an alarm or supervisory signal is defined as that time measured from receipt of a signal until retransmission or subscriber contact is initiated.

When the level of traffic in a supervising station system reaches a magnitude such that delayed response is possible, even if the loading tables or loading formulas of this Code are not exceeded, it is envisioned that it will be necessary to employ an enhanced method of processing.

For example, in a system where a single DACR instrument provided with fire and burglar alarm service is connected to multiple telephone lines, it is conceivable that, during certain periods of the day, fire alarm signals could be delayed by the security signaling traffic, such as opening and closing signals. Such an enhanced system would perform as follows, upon receipt of a signal:

(1) Automatically process the signals, differentiating between those that require immediate response by supervising station personnel and those that need only be logged
(2) Automatically provide relevant subscriber information to assist supervising station personnel in their response
(3) Maintain a timed, unalterable log of the signals received and the response of supervising station personnel to such signals

26.6.7 Testing and Maintenance Requirements for All Transmission Technologies. Testing and maintenance of communications methods shall be in accordance with the requirements of Chapter 14.

References Cited in Commentary

ANSI/UL 827, *Standard for Central-Station Alarm Services*, 2014, Underwriters Laboratory, 333 Pfingsten Road, Northbrook, IL 60062-2096.

Approval Guide, FM Global, Norwood, MA, published annually.

FM Approval Standard 3011, *Central Station Service for Fire Alarms and Protective Equipment Supervision*, April 1999, FM Global, Norwood, MA.

Manual of Style for NFPA Technical Committee Documents, 2004 edition, National Fire Protection Association, Quincy, MA.

NFPA 10, *Standard for Portable Fire Extinguishers,* 2018 edition, National Fire Protection Association, Quincy, MA.

NFPA 70®, *National Electrical Code®*, 2017 edition, National Fire Protection Association, Quincy, MA.

NFPA 71, *Standard for the Installation, Maintenance, and Use of Signaling Systems for Central Station Service* (incorporated into NFPA 72 in 1993), National Fire Protection Association, Quincy, MA.

NFPA *101®*, *Life Safety Code®*, 2018 edition, National Fire Protection Association, Quincy, MA.

NFPA 600, *Standard on Facility Fire Brigades*, 2015 edition, National Fire Protection Association, Quincy, MA.

NFPA 720, *Standard for the Installation of Carbon Monoxide (CO) Detection and Warning Equipment* (withdrawn), National Fire Protection Association, Quincy, MA.

NFPA 1221, *Standard for the Installation, Maintenance, and Use of Emergency Services Communications Systems*, 2019 edition, National Fire Protection Association, Quincy, MA.

NFPA 5000®, *Building Construction and Safety Code®*, 2018 edition, National Fire Protection Association, Quincy, MA.

Property Loss Prevention Data Sheet 5-40, Fire Alarm Systems, 2006, FM Global, Norwood, MA.

UL Fire Protection Equipment Directory, Underwriters Laboratories Inc., Northbrook, IL, published annually.

Public Emergency Alarm Reporting Systems

CHAPTER

27

Chapter 27 covers the configuration, performance, installation, and operation of all public emergency alarm reporting systems and auxiliary alarm systems. In keeping with the broader scope of the Code, the wording used in this chapter remains generic to permit and encourage the use of these systems for all types of emergency alarms.

The municipal fire alarm system requirements that first appeared as part of a general NFPA signaling standard were separated into a public fire communications standard: NFPA 73, *Standard for the Installation, Maintenance, and Use of Municipal Fire Alarm Systems* (not to be confused with the current NFPA 73, *Standard for Electrical Inspections for Existing Dwellings*, which has nothing to do with alarm systems). In 1978, all NFPA fire service–related standards were consolidated, and NFPA 73 became NFPA 1221, *Standard for the Installation, Maintenance, and Use of Emergency Services Communications Systems*. The signaling systems project was reconstituted in 1990 to create a single, unified national fire alarm code. Municipal emergency reporting boxes, their related communications pathways, and the auxiliary alarm systems portions of NFPA 1221 became a chapter in the new *NFPA 72®*, *National Fire Alarm Code*.

The following list is a summary of significant changes to Chapter 27 for the 2019 edition of the Code:

- Replaced the term *surge arrester(s)* with *surge protective device(s)* in 27.7.3.2, 27.7.3.3, 27.7.3.7, 27.7.3.9.1, 27.7.3.9.2, 27.7.3.10, and 27.7.3.11 for technical accuracy.
- Replaced the term *lightning arrester* with *surge protective device* in 27.7.3.6 for technical accuracy.

Exhibit 27.1 shows the typical installation of a public emergency alarm reporting system box at a major office building complex.

EXHIBIT 27.1

Public Emergency Alarm Reporting System Box 1896.

27.1 Application.

Δ **27.1.1** The provisions of this chapter shall apply to the proper configuration, performance, installation, and operation of public emergency alarm reporting systems and auxiliary alarm systems.

N **27.1.1.1** Public emergency alarm reporting systems shall consist of alarm boxes and alarm processing equipment that communicate on a wired or wireless network(s), one-way or two-way, meeting the requirements of this chapter.

N **27.1.1.2** Public emergency alarm reporting systems shall include systems that use a communications infrastructure that is publicly owned, operated, and controlled or where public emergency alarm reporting systems and equipment are used in other applications.

The key to understanding this chapter rests with the text of 27.1.1.2. The systems described in this chapter use a communications infrastructure owned, operated, and controlled by a public agency or where public emergency alarm reporting systems and equipment are used in other applications.

Chapter 27 provides requirements for publicly accessible alarm boxes installed throughout a community that connect to a receiving location that meets the requirements of NFPA 1221 using communications pathways owned, operated, and controlled by a public authority, such as a municipal government. It also provides the same requirements where these systems and equipment are owned and used in other applications, such as college campuses, hospitals, and industrial complexes. The boxes permit members of the public to transmit a request for emergency response from the public authority or from campus police, facility security, safety departments, and similar entities when systems are not owned by a public authority. In the simplest arrangement, these boxes transmit a signal indicating the need for response to a fire. In other, more complex arrangements, alarm boxes transmit distinct signals indicating the need for a variety of types of emergency response, such as fire, police, emergency medical, or vehicle repair services on limited access highways.

This chapter also provides requirements for special alarm boxes, known as master (alarm) boxes, that provide an interface between a protected premises alarm system and the public emergency alarm reporting system. Signals from the protected premises transmit to the communications center through the public emergency alarm reporting system. When such a connection is made, the entire alarm system becomes designated as an auxiliary alarm system. (See 27.1.7.)

27.1.2 The installation and use of public emergency alarm reporting systems and auxiliary alarm systems shall comply with the requirements of this chapter.

This chapter addresses public emergency alarm reporting systems and auxiliary alarm systems that connect an alarm system at a protected premises to a public emergency alarm reporting system. Public emergency alarm reporting systems are also known as municipal emergency (fire) alarm systems. The term *public emergency alarm reporting system* is defined in 3.3.221 as "a system of alarm-initiating devices, transmitting and receiving equipment, and communication infrastructure — other than a public telephone network — used to communicate with the communications center to provide any combination of manual or auxiliary alarm service." The *communications center,* defined in 3.3.57, houses the central operating part of the public emergency alarm reporting system. (See Exhibit 27.2.) Large municipalities usually locate the communications center at a facility designed for the purpose.

Small communities often locate the communications center at the fire station, police station, sheriff's office, or a private agency that has been contracted to provide public emergency communications services. NFPA 1221 addresses the facilities and operations of communications centers, while *NFPA 72* addresses the alarm systems used for signaling to the communications center.

The term *auxiliary alarm system* is defined in 3.3.221.1 as "a protected premises fire alarm system or other emergency system at the protected premises and the system used to connect the protected

premises system to a public emergency alarm reporting system for transmitting an alarm to the communications center." Where permitted by the authority having jurisdiction, fire alarm systems at a protected premises connect to the public emergency alarm reporting system as a means of transmitting alarm signals to the communications center. The method of connecting the building alarm system to a public emergency alarm reporting system will depend on the type of public reporting system.

FAQ

What two methods does the Code offer for connecting a building alarm system to a communications center that uses a wired network?

Where the public emergency alarm reporting system uses alarm boxes connected to a wired network, the Code offers two methods to connect a building fire alarm system: a *local energy–type auxiliary alarm system*, defined in 3.3.221.1.1, and a *shunt-type auxiliary alarm system*, defined in 3.3.221.1.2. Boxes using a wireless network or boxes using a telephone (series) wired network require a local energy auxiliary connection.

27.1.3 The requirements of this chapter shall apply to systems and equipment for the transmission and reception of alarm and other emergency signals, including those from auxiliary alarm systems, connected to the public emergency alarm reporting system.

27.1.4 The requirements of Chapters 10 and 14 shall apply unless otherwise noted in this chapter.

27.1.5 Only those requirements from Chapter 7 that are required by Chapter 14 shall apply.

27.1.6 The application of public emergency alarm reporting systems and auxiliary alarm systems to provide defined reporting functions from or within private premises shall be permitted where approved by the authority having jurisdiction.

Historically, only fire alarm signals or trouble signals relating to the reporting system itself are transmitted to the communications center. A municipality or other entity that controls and uses public emergency alarm reporting systems and auxiliary alarm systems may exercise its right as an authority having jurisdiction and permit the transmission of supervisory or trouble signals from buildings. This can be achieved by using a wireless network or wired network multi-zone electronic master, or auxiliary boxes that provide for the transmission of multiple data points from each box.

EXHIBIT 27.2

Communications Center. (Source: Lakes Region Mutual Fire Aid, Laconia, NH; photo by Deputy Chief Douglas M. Aiken)

27.1.7* Where a protected premises fire alarm system or other emergency system at the protected premises has its signals sent to a communications center via public emergency alarm reporting system, the protected premises system shall become an auxiliary alarm system.

A.27.1.7 Auxiliary alarm systems include the equipment at the protected premises as well as the equipment connecting it to the public emergency alarm reporting system. While the operational requirements relating to the signals sent off-premises fall under the scope of Chapter 27, the requirements of Chapter 23 also apply.

27.2 General.

27.2.1* Public emergency alarm reporting systems shall be designed, installed, operated, and maintained in accordance with this chapter to provide reliable transmission and receipt of alarms in a manner acceptable to the authority having jurisdiction.

A.27.2.1 When choosing from available options to implement a public emergency alarm reporting system, the operating agency should consider which of the choices would facilitate the maximum reliability of the system, where such a choice is not cost prohibitive.

27.2.2 A public emergency alarm reporting system, as described herein, shall be permitted to be used for the transmission of other signals or calls of a public emergency nature, provided that such transmission does not interfere with the transmission and receipt of fire alarms.

A public emergency alarm reporting system is permitted to transmit other signals of a public emergency nature, such as a request for emergency medical response or police response. These transmissions must not interfere with the transmission of fire alarm signals. In most cases where a system will transmit multiple signals from a municipal box, it will use either a wireless network, multi-zone electronic, or a type of telephone (series) box.

Wireless and wired network systems frequently offer the option of transmitting several distinct data points from a single box. The system operator may assign these data points to other emergency response functions. Some of these functions include medical and terrorist alerts from buildings and traveler assistance functions to summon aid in the case of emergencies on limited-access highways. A telephone (series) reporting system allows a person using the telephone handset to request assistance from the operator at the communications center.

27.2.3* All devices shall be designed to function satisfactorily under the climatic and environmental conditions to which they could be exposed.

A.27.2.3 Consideration should be given to the fact that devices could be installed in areas that are exposed to higher or lower temperatures, moisture, or other environmental conditions that could be more severe than ambient conditions found in a typical building. As an example, equipment could be installed inside a building in a boiler room, basement, attic, and so forth, where temperatures actually exceed ambient conditions outside the building. It is recommended that the authority having jurisdiction consider all possible installation locations and environmental conditions and that the equipment selected be designed to operate within the most extreme conditions to which it could be exposed.

27.2.3.1 All devices shall be identified as suitable for the location and conditions for which they are installed.

27.2.4 All circuits, paths, and equipment necessary for the receipt of signals from a protected premises shall be monitored for integrity.

27.3 Management and Maintenance.

27.3.1 All systems shall be under the control of a designated jurisdictional employee.

27.3.2 Maintenance by an organization or person other than from the jurisdiction or an employee of the jurisdiction shall be by written contract, guaranteeing performance acceptable to the authority having jurisdiction.

27.3.3 Where maintenance is provided by an organization or person(s) other than the jurisdiction or its employees, complete written records of the installation, maintenance, test, and extension of the system shall be forwarded to the designated employee in a time period and manner approved by the authority having jurisdiction.

Subsection 27.1.4 and 27.3.6.1 require those operating public emergency alarm reporting systems to test and maintain the systems in accordance with the requirements of Chapter 14. A single employee must have responsibility for controlling the system (see 27.3.1). This individual could be the fire alarm superintendent, superintendent of fire alarms, deputy chief of communications, director of signals, and so forth.

The International Municipal Signal Association (IMSA) is the professional membership association for individuals responsible for overseeing and operating public emergency alarm reporting systems. IMSA provides certification programs, technical literature, and other professional services such as continuing education and professional development. IMSA can be reached at 597 Haverty Court, Suite 100, Rockledge, FL 32955, or at www.imsasafety.org.

FAQ

What is required when maintenance is performed by an organization outside the jurisdiction responsible for the system?

Where the jurisdiction does not have adequate staff or knowledge of the system to perform testing and maintenance, 27.3.2 and 27.3.3 permit a written contract with a maintenance organization. The organization performing these services must provide written records to the designated employee at a time and in a manner approved by the authority having jurisdiction.

27.3.4 All equipment shall be installed in locations accessible to the authority having jurisdiction for the purpose of maintenance and inspection.

27.3.5 Records of wired public emergency alarm reporting system circuits shall include all of the following:

(1) Outline plans showing terminals and box sequence
(2) Diagrams of applicable office wiring
(3) List of materials used, including trade name, manufacturer, and year of purchase or installation

Proper plans, material specification sheets, and diagrams allow for ease of repair, maintenance, and testing of the system. The requirements of 27.3.5 supplement the requirements of 7.7.1 and Section 14.6.

27.3.6 Public emergency alarm reporting systems as defined in this chapter shall, in their entirety, be subject to a complete operational acceptance test upon completion of system installation.

27.3.6.1 The test(s) required by 27.3.6 shall be made in accordance with the requirements of the authority having jurisdiction; however, in no case shall the operational functions tested be less than those stipulated in Chapter 14.

27.3.6.2 Operational acceptance tests shall be performed on any alarm-reporting devices, as covered in this chapter, that are installed or modified subsequent to the test required by 27.3.6.

Chapter 14 contains the requirements for testing and maintaining public emergency alarm reporting systems. Chapter 27 requires a complete acceptance test for all public emergency alarm reporting systems.

27.3.7 Personnel Qualification. Personnel shall be qualified and experienced in accordance with the requirements of 10.5.6.

Subsection 10.5.6 provides requirements and a list of qualifications for persons designing, installing, and servicing public emergency alarm reporting systems. It emphasizes that individuals have qualifications specific to public emergency alarm reporting systems. Since these systems are designed to provide a high degree of reliability and use a wide range of communications formats and pathways, specialized knowledge in the proper installation and maintenance techniques is extremely important.

27.4 Communications Methods.

27.4.1 Application.

27.4.1.1 A public emergency alarm reporting system shall include wired or wireless network(s), for one-way signaling or two-way command and control communications between alarm boxes, alarm processing equipment, and the communications center.

27.4.1.2 A public emergency alarm reporting system shall be permitted to be used with emergency communications systems covered under Chapter 24.

The provider of a public emergency alarm reporting system may use the system in conjunction with an emergency communications system (ECS) covered in Chapter 24, allowing the smooth integration of both systems.

27.4.2 Wired Network(s). The terms *wired network* and *public cable plant* shall be considered the same and interchangeable throughout this chapter.

27.4.2.1 All wired networks or public cable plants shall meet the requirements of Section 27.7.

27.4.2.1.1 Fiber-optic cabling shall be considered an acceptable transmission medium, provided that the cabling and installation comply with the requirements of Section 27.7 and the conversion equipment used to interface to the fiber-optic signal complies with all applicable requirements of Chapter 27.

27.4.2.2 Alarm processing equipment at the communications center shall meet the requirements of 27.5.2 and 27.5.4.

27.4.2.3 Alarm processing equipment at a remote communications center shall meet the requirements of 27.4.2.2 and 27.5.3.

Exhibit 27.3 shows two examples of alarm processing equipment: wired and wireless.

EXHIBIT 27.3

Alarm Processing Equipment. Left: wired equipment; right: wireless equipment. (Source: Lakes Region Mutual Fire Aid, Laconia, NH; photos by Deputy Chief Douglas M. Aiken)

27.4.2.4 Alarm boxes shall meet one of the following requirements:

(1) Publicly accessible boxes shall meet the requirements of 27.6.1 through 27.6.2 and 27.6.5.
(2) Auxiliary boxes shall meet the requirements of 27.6.1, 27.6.3, and 27.6.5.
(3) Master boxes shall meet the requirements of 27.6.1 through 27.6.3 and 27.6.5.

27.4.3 Wireless Network(s). The terms *wireless network* and *radio system* shall be considered the same and interchangeable throughout this chapter.

27.4.3.1 All wireless networks shall meet the requirements of 27.4.3.2 through 27.4.3.5.

27.4.3.2 In addition to the requirements of this Code, all wireless equipment shall be designed and operated in compliance with all applicable rules and regulations of the Federal Communications Commission (FCC) or, where required, the National Telecommunications and Information Administration (NTIA).

Publicly accessible wireless network boxes operate on a designated frequency assigned by the Federal Communications Commission (FCC). When actuated, wireless network boxes send a data burst that contains information on the status of the specific box. This data burst may contain one or more signals and permits wireless network boxes to transmit signals relating to more than simply fire alarm signals. (See the commentary following 27.1.6 and 27.2.2.)

27.4.3.3* Unlicensed radio frequencies shall not be permitted.

A.27.4.3.3 Nonfederal radio frequencies are licensed by the Federal Communications Commission. Federal radio frequencies are assigned by the NTIA. Most frequencies available for FCC licensing require frequency coordination in order to limit interference from other users. Authorities having jurisdiction should use licensed, coordinated radio frequencies for wireless networks in order to minimize interference.

Outside of the United States similar regulatory bodies provide coordination and licensing such as Industry Canada.

27.4.3.4 Fire alarm signals, other emergency alarm signals, and monitoring for integrity signals shall be permitted on the same radio frequency, dedicated for that purpose.

27.4.3.5 The wireless network capacity for the number of alarm boxes permitted on a single radio frequency shall comply with one of the following:

(1) For networks that use one-way transmission in which the individual alarm box automatically initiates the required message *(see 27.5.5.3.3)* using circuitry integral to the alarm box, not more than 500 alarm boxes are permitted on a single radio frequency.
(2) For networks that use a two-way concept in which interrogation signals *(see 27.5.5.3.3)* are transmitted to the individual alarm boxes from the communications center on the same radio frequency used for receipt of alarms, not more than 250 alarm boxes are permitted on a single radio frequency.
(3) For networks that use a two-way concept where interrogation signals are transmitted on a radio frequency that differs from that used for receipt of alarms, not more than 500 alarm boxes are permitted on a single radio frequency.

27.4.3.6 Alarm processing equipment at the communications center shall meet the requirements of 27.5.2 and 27.5.5.

27.4.3.7 Alarm processing equipment at a remote communications center shall meet the requirements of 27.4.3.6 and 27.5.3.

27.4.3.8 Alarm boxes shall meet one of the following requirements:

(1) Publicly accessible boxes shall meet the requirements of 27.6.1 through 27.6.2 and 27.6.6.
(2) Auxiliary boxes shall meet the requirements of 27.6.1, 27.6.3, and 27.6.6.
(3) Master boxes shall meet the requirements of 27.6.1 through 27.6.3 and 27.6.6.

27.5 Alarm Processing Equipment.

The alarm processing equipment required to receive and control the public emergency alarm reporting system shall be installed in the communications center or remote communications center used by emergency response agencies as defined in NFPA 1221.

27.5.1 General. The requirements of 27.5.2 shall apply to all processing equipment, wired or wireless, for a public emergency alarm reporting network.

27.5.2 Alarm Processing Equipment at Communications Center.

Meeting the requirements of Section 27.5 ensures that the communications center will receive the signals transmitted over the public emergency alarm reporting system and will automatically record them in a manner that provides a permanent visual record of the signals. At the same time, an audible notification appliance will alert the operators to incoming signals.

The signal received in the communications center indicates the exact location of its origin. This indication comes from a unique number assigned to each public emergency alarm reporting box. An operator views an alphanumeric display on the receiving equipment or a computer-aided dispatching system that provides the exact location of the received alarm. In systems where only the box number appears, a manual reference chart is used and the operator then translates the box number to an exact location. NFPA 1221 covers the requirements for computer-aided dispatching systems.

27.5.2.1 Type A and Type B Systems.

27.5.2.1.1 Alarm systems shall be Type A or Type B.

27.5.2.1.2 A Type A system shall be provided where the number of all alarms required to be retransmitted exceeds 2500 per year.

27.5.2.1.3 Where a Type A system is required, the automatic electronic retransmission of incoming alarms shall be permitted, provided that both of the following conditions are met:

(1) Approved facilities are provided for the automatic receipt, storage, retrieval, and retransmission of alarms in the order received.
(2) The operator(s) of the dispatch facility has the capability to immediately override the automatic retransmission and revert to manual retransmission.

In a Type A system, the operator(s) at the communications center receives signals from the public emergency alarm reporting system. The operator(s) then manually and selectively retransmits these signals to only the emergency response stations designated to respond to the location of each particular signal. In a Type B system, equipment at the communications center automatically retransmits the received signals to all emergency response stations and other locations connected to the system.

Where signaling traffic exceeds 2500 alarms per year, 27.5.2.1.2 requires the use of a Type A system. This limits the number of signals retransmitted to each emergency response station, particularly where an individual emergency response station would not need to respond to a specific alarm signal.

27.5.2.2 Visual Recording Devices.

27.5.2.2.1 Alarms from alarm boxes shall be automatically received and recorded at the communications center.

27.5.2.2.2 A device for producing a permanent graphic recording of all alarm, supervisory, trouble, and test signals received or retransmitted, or both, shall be provided at each communications center for each alarm circuit and tie circuit.

27.5.2.2.3 Reserve recording devices shall be provided in accordance with 27.5.2.2.3.1 and 27.5.2.2.3.2.

27.5.2.2.3.1 Where each circuit is served by a dedicated recording device, the number of reserve recording devices required on-site shall be equal to at least 5 percent of the circuits in service and in no case less than one device.

27.5.2.2.3.2 Where two or more circuits are served by a common recording device, a reserve recording device shall be provided on-site for each circuit connected to a common recorder.

FAQ What two cases does the Code address for reserve recording devices?

The subject of reserve recording devices often causes some confusion. The Code deals with two specific cases. In the first case, covered by the requirements of 27.5.2.2.3.1, each circuit has a dedicated recording device. The receiving location must have an additional number of reserve recording devices equal to at least 5 percent of the total number of receiving circuits or no less than one reserve recording device.

In the second case, covered by the requirements of 27.5.2.2.3.2, a common recording device serves multiple receiving circuits. Each recording device has multiple channels, one for each circuit. Paragraph 27.5.2.2.3.2 requires a reserve recording device on-site for each circuit connected to a common recorder.

For example, suppose that a large northeastern city has over 120 circuits serving 2500 boxes. These circuits connect to 7 recording devices, each of which can handle up to 20 circuits. The city maintains 20 reserve individual circuit recording devices, or 1 reserve device for each circuit connected to a common recorder. The switchboard in the communications center allows the 20 circuits from any single failed common recording device to connect to those 20 reserve individual circuit recording devices.

27.5.2.2.4 In a Type B wired system, one such recording device shall be installed in each emergency response facility, and at least one shall be installed in the communications center.

Δ **27.5.2.2.5** Permanent visual records shall comply with 27.5.2.2.5.1 and 27.5.2.2.5.2.

N **27.5.2.2.5.1** A permanent visual record and an audible signal shall be required to indicate the receipt of an alarm.

N **27.5.2.2.5.2** The permanent record shall indicate the exact location from which the alarm is being transmitted.

27.5.2.2.6 The audible signal device shall be permitted to be common to two or more box circuits and arranged so that the emergency alarm operator is able to manually silence the signal temporarily by a self-restoring switch.

N **27.5.2.2.7** Facilities shall be provided with a device that automatically records the date and time of receipt of each alarm.

27.5.2.3 System Integrity.

27.5.2.3.1 Wired circuits upon which transmission and receipt of alarms depend shall be constantly monitored for integrity to provide prompt warning of conditions adversely affecting reliability.

27.5.2.3.2 The power supplied to all required circuits and devices of the system shall be constantly monitored for integrity.

Paragraphs 27.5.2.3.1 and 27.5.2.3.2 provide requirements for monitoring the integrity of system wiring and power supplies. Rather than detailing the specific kinds of faults that might impair the operation of the system, these requirements cover all conditions that would adversely affect reliability.

27.5.2.4 Trouble Signals.

27.5.2.4.1 Trouble signals shall be indicated where there is a trained and competent person on duty at all times.

27.5.2.4.2 Trouble signals shall be distinct from alarm signals and shall be indicated by a visual and audible signal.

27.5.2.4.3 The audible signal shall be permitted to be common to more than one circuit that is monitored for integrity.

27.5.2.4.4 A switch for silencing the audible trouble signal shall be permitted, provided that the visual signal remains operating until the silencing switch is restored to its normal position.

27.5.2.4.5 The audible signal shall be responsive to faults on any other circuits that occur prior to restoration of the silencing switch to its normal position.

The paragraphs under 27.5.2.4 provide requirements for trouble signals and trouble signal appliance silencing. Trouble signals must alert the operator to problems with the circuits or power supplies. An operator may silence an audible trouble signal appliance only if a visual indication remains. Once silenced, the audible trouble signal must resound if faults occur on other circuits.

27.5.2.5 Power Supply.

27.5.2.5.1 Each box circuit or wireless receiving system shall be powered by one of the following:

(1)* Form 4A, which is an inverter, powered from a common rectifier, receiving power by a single source of alternating current with a floating storage battery having a 24-hour standby capacity

(2)* Form 4B, which is an inverter, powered from a common rectifier, receiving power from two sources of alternating current with a floating storage battery having a 4-hour standby capacity

(3)* Form 4C, which is a rectifier, converter, or motor generator receiving power from two sources of alternating current with transfer facilities to apply power from the secondary source to the system within 30 seconds

A.27.5.2.5.1(1) Figure A.27.5.2.5.1(1) illustrates a Form 4A arrangement.

A.27.5.2.5.1(2) Figure A.27.5.2.5.1(2) illustrates a Form 4B arrangement.

A.27.5.2.5.1(3) Figure A.27.5.2.5.1(3) illustrates a Form 4C arrangement. Refer to NFPA 1221.

Figures A.27.5.2.5.1(1), A.27.5.2.5.1(2), and A.27.5.2.5.1(3) provide graphic descriptions of the three power supply forms. Although not required, Figure A.27.5.2.5.1(3) depicts two generators; two generators are permitted by NFPA 1221.

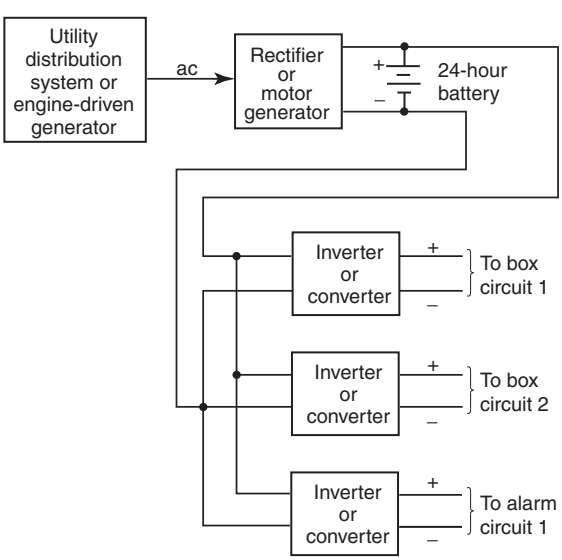

FIGURE A.27.5.2.5.1(1) Form 4A.

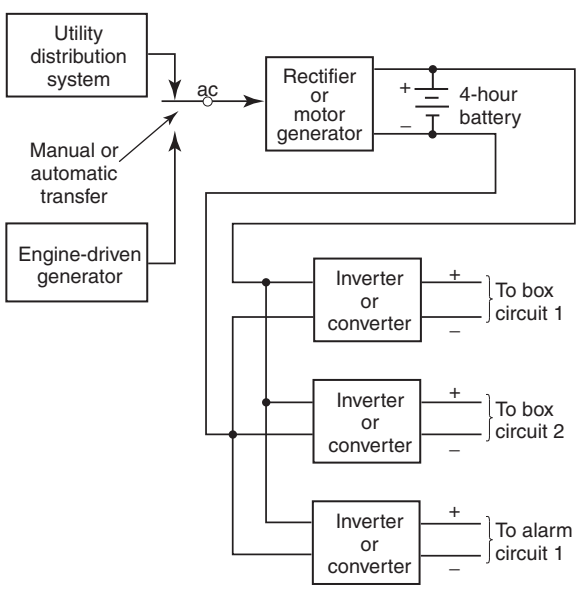

FIGURE A.27.5.2.5.1(2) Form 4B.

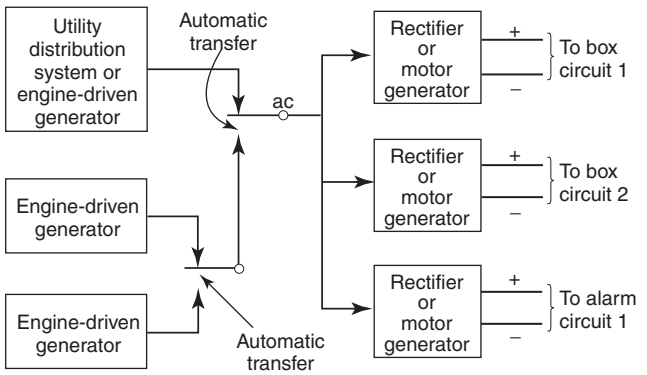

FIGURE A.27.5.2.5.1(3) *Form 4C.*

27.5.2.5.2 Form 4A and Form 4B shall be permitted to distribute the system load between two or more common rectifiers and batteries.

27.5.2.5.3 The capacity of batteries, motor generators, rectifiers, or other permitted power supplies shall exceed the calculated load of all connected circuits, so that circuits developing grounds or crosses with other circuits each shall be able to be supplied by an independent source to the extent required by 27.5.2.5.1.

27.5.2.5.4 Provision shall be made to connect any circuit to any battery, generator, or rectifier, or other permitted power supply.

This requirement ensures maximum reliability for the public emergency alarm reporting system. When one power supply fails, the circuits it normally serves must receive power from other power supplies until technicians repair the failed power supply.

27.5.2.5.5 Individual circuits supplied from common leads shall be protected by the installation of enclosed fuses located at the point where the circuit conductors receive their supply.

27.5.2.5.6 Local circuits at communications centers shall be supplied in accordance with 27.5.2.5.6.1 and 27.5.2.5.6.2.

27.5.2.5.6.1 The source of power for local circuits required to operate the essential features of the system shall be monitored for integrity.

The system must monitor the integrity of the power for circuits and equipment within the communications center. The loss of this power must cause a trouble signal. See 27.5.2.3.1, 27.5.2.3.2, and the commentary following 27.5.2.3.2 for additional requirements and information related to system integrity.

27.5.2.5.6.2 Local circuits at communications centers shall be permitted to be connected to the same power source as box circuits, wireless receiving system circuits, or a separate power source.

27.5.2.5.7 Visual and audible means to indicate a 15 percent or greater reduction of normal power supply (rated voltage) shall be provided.

A trouble signal must be initiated when power for the public emergency alarm reporting system or for local circuits at the communications center drops 15 percent or more below the normal rated voltage.

27.5.2.5.8 Where the electrical service/capacity of the equipment required under Section 4.7 of NFPA 1221 satisfies the needs of equipment in this chapter, such equipment shall not be required to be duplicated.

FAQ What are the power supply requirements of NFPA 1221?

NFPA 1221 has specific power supply requirements. The system design must include two sources of power: a connection to a utility distribution system and a connection to an engine-driven generator. As an alternative, the system design may rely on power supplied by two engine-driven generators. One unit supplies normal power, and the other unit serves as a standby. If these required sources meet the requirements of 27.5.2.5.1, then 27.5.2.5.8 permits the use of such a source without the need for duplication.

27.5.2.6 Rectifiers, Converters, Inverters, and Motor Generators.

27.5.2.6.1 Rectifiers shall be supplied from the secondary of an isolating transformer.

27.5.2.6.1.1 The primary of the isolating transformer shall be connected to a circuit not exceeding 250 volts.

27.5.2.6.2 Complete spare units or spare parts shall be in reserve.

Δ **27.5.2.6.3** Systems with at least one rectifier shall comply with 27.5.2.6.3.1 and 27.5.2.6.3.2.

N **27.5.2.6.3.1** One spare rectifier shall be provided for every 10 operating rectifiers on a system.

N **27.5.2.6.3.2** All systems shall have at least one spare rectifier.

Δ **27.5.2.6.4** Leads from rectifiers or motor generators that have a float-charged battery shall be protected by fuses rated at a minimum of 1 ampere and a maximum of 200 percent of connected load at nominal circuit voltage.

N **27.5.2.6.5** Leads from rectifiers or motor generators that do not have a float-charged battery shall be protected by fuses rated at a minimum of 3 amperes and a maximum of 200 percent of connected load at nominal circuit voltage.

The requirements for sizing of fuse-type overcurrent protection devices provide circuits with sufficient protection without making the protective fuses overly sensitive. Too frequent operation of the fuses would reduce the reliability of the public emergency alarm reporting system.

27.5.2.7 Engine-Driven Generators. The installation of engine-driven generator sets shall conform to the provisions of NFPA 37, NFPA 110, and NFPA 1221.

Compliance with the requirements of these other NFPA standards helps to maintain the system's reliability by ensuring the continuity of the system's supplied power.

27.5.2.8 Float-Charged Batteries.

The requirements in 27.5.2.8 help to maintain the system's reliability by helping to sustain the continuity of the supplied power.

Δ **27.5.2.8.1** Float-charged batteries shall be of the storage type. Primary batteries (i.e., dry cells) shall not be used.

N **27.5.2.8.1.1** Vented lead-acid batteries shall be in approved transparent materials.

N **27.5.2.8.1.2** Other types of batteries shall be in containers identified or approved for the purpose.

27.5.2.8.2 Float-charged batteries shall be above building grade level.

27.5.2.8.3 Float-charged batteries shall be located on the same floor of the building as the operating equipment.

The municipality or government agency or other controlling entity must locate storage batteries on the same floor or level as the operating equipment for the public emergency alarm reporting system.

27.5.2.8.4 Float-charged batteries shall be accessible for maintenance and inspection.

27.5.2.8.5 Float-charged batteries shall be installed in accordance with Article 480 of *NFPA 70*.

Δ **27.5.2.8.6** Batteries shall be mounted to provide effective isolation from the ground or working platform and from other batteries.

N **27.5.2.8.6.1** Mounting equipment shall be listed and identified for the location.

N **27.5.2.8.6.2** It shall be permissible for the authority having jurisdiction to waive this requirement to allow the use of alternative mounting equipment where it is assured that equivalent objectives can be achieved.

27.5.2.8.7 Battery mounting shall be protected against deterioration and shall provide stability, especially in geographic areas subject to seismic disturbance.

27.5.2.9 Equipment Fire Protection. Where applicable, electronic computer/data processing equipment shall be protected in accordance with NFPA 75.

Given that communications centers use equipment similar to that found at any computer or data processing facility, the same level of fire protection is required for this critical equipment that industrial or commercial facilities provide for other such computer or data processing equipment. NFPA 75, *Standard for the Protection of Information Technology Equipment,* provides requirements for such protection.

27.5.3* Remote Communications Center. Where the communications center is remotely located from the wired or wireless alarm processing equipment, the requirements of 27.5.3.1 through 27.5.3.7, in addition to all of the requirements of Section 27.5, shall apply.

Paragraphs 27.5.3.2 and 27.5.3.3 require the alarm processing equipment located remotely from the communications center to be accessible and capable of providing alarm and trouble information when manned during a failure of the pathway connecting the alarm processing equipment and the communications center.

Where wired or wireless repeating systems are used as a pathway between the alarm processing equipment and the communications center, two redundant repeater systems are required in accordance with 27.5.3.4. The redundant repeater systems must be capable of automatic switchover in the event of a failure of the operating repeater. Wireless repeaters must operate on licensed radio frequencies; the use of commonly available wireless devices designed to operate in the unlicensed spectrum is not permitted because of the potential for interference by other unlicensed devices. The repeating system must be able to send both alarm and trouble signals to the communications center. Failure of the pathways between the alarm processing equipment and the communications center must be detected and annunciated at both locations in accordance with 27.5.3.6. The visual and audible trouble signals must be distinct from other indicators at the communications center. When there is a failure of the

pathway to the communications center, the alarm processing equipment must be manned by trained personnel until the pathway is re-established.

FAQ

What is one reason why a municipality might establish a remote communications center?

Subsection 27.5.3 provides requirements for those circumstances where main alarm receiving, power supply, and control equipment are not located at the communications center. This might occur when the municipality has moved the communications center to combine with other emergency dispatching, such as police or emergency medical services.

A.27.5.3 Subsection 27.5.3 provides requirements for circumstances in which a municipality or government agency has situated a communications center at a location remote from the alarm processing equipment for the public emergency alarm reporting system. This might occur when the municipality or government agency has moved the communications center to combine services with other emergency dispatching, such as police emergency and medical services, or to combine with neighboring towns or cities (regionalization). In such cases, it might be impractical to relocate the alarm processing equipment.

27.5.3.1 All equipment shall be listed for its intended use and shall be installed in accordance with *NFPA 70*.

27.5.3.2 Alarm processing equipment located remote from the communications center shall be capable of providing basic dispatching information independent of the communications center.

27.5.3.3 The alarm processing equipment shall be located where it can be monitored for alarm and trouble conditions and shall be accessible to be manned in case of a pathway or communications failure with the communications center.

27.5.3.4 Wired or wireless alarm repeating systems used to repeat signals between a remote communications center and the alarm processing equipment location shall meet the requirements of 27.5.3.4.1 through 27.5.3.4.7.

27.5.3.4.1 There shall be a minimum of two complete and independent alarm repeater systems, including batteries and power supplies, to provide redundancy.

27.5.3.4.2 If the alarm repeater system is configured with one alarm repeater in standby mode, the system shall be capable of detecting a communications failure and shall automatically switch to the backup system without interruption or loss of any alarm or trouble transmission.

27.5.3.4.3 Alarm repeater systems shall not be used for any purpose other than alarm communications between the communications center and the alarm processing equipment.

Δ **27.5.3.4.4** Wireless alarm repeaters shall operate on a licensed frequency dedicated for this purpose.

N **27.5.3.4.4.1** Wireless alarm repeaters shall be licensed to a public entity.

N **27.5.3.4.4.2** Unlicensed frequencies shall not be permitted.

27.5.3.4.5 The communications method used for the alarm repeater, wired or wireless, shall be two-way.

27.5.3.4.6 The public emergency alarm reporting system communications infrastructure shall be used to repeat alarm and trouble signals between the alarm processing equipment and a remote communications center.

27.5.3.4.7 Where it is not possible to use the public emergency alarm reporting system communications infrastructure to provide communications between the alarm processing equipment and the remote communications center, an alternative repeater method shall be permitted and shall meet the requirements of 27.5.3.4.7.1 and 27.5.3.4.7.2.

27.5.3.4.7.1 If an alternative alarm repeater method is used it shall be publically owned, operated, and controlled.

27.5.3.4.7.2 The alternative alarm repeater method shall meet the requirements of 27.5.3, except 27.5.3.4.2 shall not apply.

27.5.3.5 Pathways between the remote communications center and the alarm processing equipment shall be monitored for integrity and shall be dedicated and not used for any other purpose.

27.5.3.6 When communications between the communications center and the alarm processing equipment fails, the requirements of 27.5.3.6.1 through 27.5.3.6.3 shall apply.

27.5.3.6.1 A pathway or communications trouble condition shall be detected and annunciated at both the communications center and the alarm processing equipment location within 200 seconds and shall meet the requirements of 27.5.2.4.

27.5.3.6.2 Visual and audible trouble alarm indications pertaining to a pathway or communications failure between the communications center and the alarm processing equipment location shall be distinct from all other trouble alarms.

27.5.3.6.3 The alarm processing equipment shall be manned by trained personnel until communications can be re-established.

27.5.3.7 Power supplies shall be provided in accordance with 27.5.2.5.

27.5.4 Wired Network Systems.

Subsection 27.5.4 establishes requirements for public emergency alarm reporting systems using a wired network.

27.5.4.1 System Arrangement and Operation.

27.5.4.1.1 For a Type B system, the effectiveness of noninterference and succession functions between box circuits shall be no less than between boxes in any one circuit.

In a Type B (coded) wired system, the system repeats signals from one box circuit or alarm circuit onto the other box and alarm circuits. The repetition of these signals causes other boxes connected to the system to sense a busy circuit and wait for a clear circuit before transmitting. This approach provides for the proper functioning of the noninterfering and successive features of the three-fold (coded) wired alarm boxes.

27.5.4.1.2 A metallic box open circuit condition shall cause a warning signal in all other circuits, and, thereafter, the circuit(s) not in the open circuit condition shall be automatically restored to operative condition.

When an open fault occurs on a box or alarm circuit, the repeater equipment must repeat only one tap or blow onto all other circuits. The equipment must then restore the circuits to a closed circuit condition so that boxes on the circuits do not see the open on one circuit as an open circuit condition on all other circuits. The single tap or blow repeated to all circuits of a Type B system provides a warning or trouble signal, which indicates that one of the circuits in the system has an open fault.

27.5.4.1.3 Box circuits shall be sufficient in number and laid out so that the areas that would be left without box protection in case of disruption of a circuit do not exceed those covered by 20 properly spaced boxes where all or any part of the circuit is of aerial open-wire, or by 30 properly spaced boxes where the circuit is entirely in underground or messenger-supported cable.

This requirement limits the extent of the loss of service to a given area of a municipality if an outage should occur in a box circuit. The size of the area covered by any box circuit will depend on the topography of the particular municipality and whether the box circuit covers a residential or nonresidential area.

Paragraph 27.6.2.1.6 leaves the decision about placing boxes up to the authority having jurisdiction. Guidance in A.27.6.2.1.6 suggests that a person should not have to travel more than one block or 500 ft (150 m) to reach a box in a nonresidential area or two blocks or 800 ft (240 m) in a residential area.

27.5.4.1.4 Where all boxes on any individual circuit and associated equipment are designed and installed to provide for receipt of alarms through the ground in the event of a break in the circuit, the circuit shall be permitted to serve twice the number of aerial open-wire and cable circuits, respectively, as are specified in 27.5.4.1.3.

In most (coded) wired systems, when an actuated alarm box senses that the circuit has an open fault, it idles for one round, connects to earth ground, and then transmits four rounds of its identifying signal. Sensing an open circuit, the receiving equipment at the communications center also connects itself to earth ground. This conditioning of the circuit allows the box to transmit its signal through earth ground.

FAQ

What number of boxes does the Code permit if all boxes have the ability to transmit through earth ground?

If two open faults occur on the circuit, the boxes isolated between the faults cannot transmit a signal. When all boxes have this ability to transmit through earth ground in the case of an open fault on the circuit, the circuit can serve double the number of boxes that it might serve where the boxes do not have this capability. With this feature provided, an aerial open-wire circuit can serve an area equal to that covered by up to 40 properly spaced boxes, and an underground or messenger-supported circuit can serve an area equal to that covered by up to 60 properly spaced boxes.

27.5.4.1.5 The installation of additional boxes in an area served by the number of boxes spaced as indicated in 27.5.4.1.1 through 27.5.4.1.4 shall not constitute geographical overloading of a circuit.

The key phrase to understanding this requirement is "shall not constitute." If technicians install additional boxes in a particular area and connect them to a circuit that already serves properly spaced boxes installed in that geographical area, these additional boxes do not constitute an overload on the circuit. This requirement permits the addition of boxes to serve particular hazards within an area without the need to add more circuits.

27.5.4.1.6 Sounding devices for signals shall be provided for box circuits.

27.5.4.1.6.1 A common sounding device for more than one circuit shall be permitted to be used in a Type A system and shall be installed at the communications center.

27.5.4.1.6.2 In a Type B system, a sounding device shall be installed in each emergency response facility at the same location as the recording device for that circuit, unless installed at the communications center, where a common sounding device shall be permitted.

27.5.4.2 Constant-Current (100 milliampere) Systems. Constant-current systems shall comply with the requirements of 27.5.4.2.1 through 27.5.4.2.6.

27.5.4.2.1 Means shall be provided for manually regulating the current in box circuits so that the operating current is maintained within 10 percent of normal throughout changes in external circuit resistance from 20 percent above normal to 50 percent below normal.

27.5.4.2.2 The voltage supplied to maintain normal line current on box circuits shall not exceed 150 volts, measured under no-load conditions, and shall be such that the line current cannot be reduced below the approved operating value by the simultaneous operation of four boxes.

27.5.4.2.3 Visual and audible means to indicate a 20 percent or greater reduction in the normal current in any alarm circuit shall be provided.

27.5.4.2.4 All devices connected in series with any alarm circuit shall function when the alarm circuit current is reduced to 70 percent of normal.

27.5.4.2.5 Meters shall comply with 27.5.4.2.5.1 and 27.5.4.2.5.2.

N **27.5.4.2.5.1** Meters shall be provided to indicate the current in any box circuit and the voltage of any power source.

N **27.5.4.2.5.2** Meters used in common for two or more circuits shall be provided with cut-in devices designed to reduce the probability of cross-connecting circuits.

27.5.4.2.6 Necessary switches, testing, and signal transmitting and receiving devices shall be provided to allow the isolation, control, and test of each circuit up to at least 10 percent of the total number of box and dispatch circuits, but never less than two circuits.

The (coded) wired public emergency alarm reporting system operates at a nominal constant current of 100 mA. The requirements of 27.5.4.2 regulate and maintain the current, limit the voltage, provide a visual indication of current reduction, and provide meters to allow operators to measure current. These features ensure that the system maintains a high level of operational integrity.

Older systems had employed discrete components, but modern systems use printed circuit boards. The communications center must maintain sufficient spare parts on hand — switches, printed circuit boards or testing, signal transmitting, and signal receiving devices — for at least 10 percent of the total number of box and dispatch circuits. For systems with fewer box and dispatch circuits, spare parts must be available for least two circuits. For example, if a system has 40 box and 8 dispatch circuits, the communications center must have at least 5 complete sets of spare parts (or 5 printed circuit boards) on hand.

Exhibit 27.4 illustrates a Form 4 control center that uses printed circuit boards.

27.5.4.3 Grounded Common-Current Systems. Where common-current source systems are grounded, the requirements of 27.5.4.3.1 and 27.5.4.3.2 shall apply.

27.5.4.3.1 Where common-current source systems are grounded, the resistance of the ground shall not exceed 10 percent of resistance of any connected circuit and shall be located at one side of the battery.

27.5.4.3.2 Visual and audible indicating devices shall be provided for each box and dispatch circuit to give immediate warning of ground leakage current that will have a detrimental effect on circuit operation.

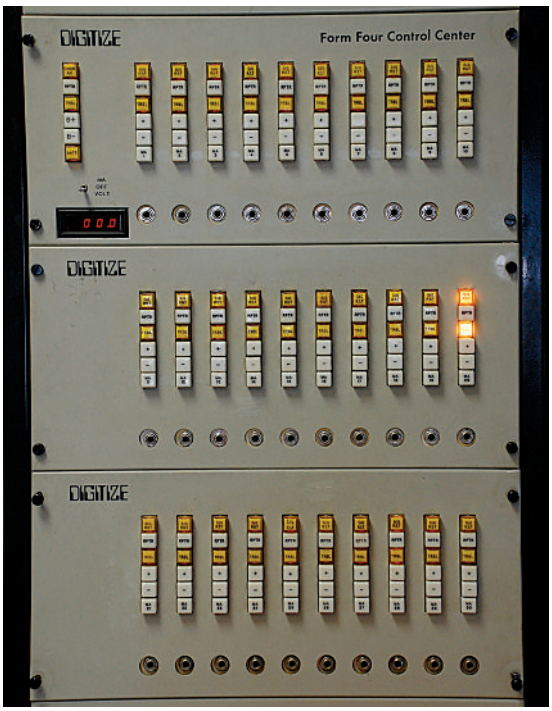

EXHIBIT 27.4

Form 4 Control Equipment. (Source: Jeffrey G. Knight, Superintendent of Fire Alarm & Communications, Newton Fire Department, Newton, MA)

The requirements of 27.5.4.3 apply only to older constant-current systems that used Form 2 power supplies. The Code no longer recognizes this type of power supply. Some Form 2 power supplies had one side of the battery connected to earth ground to facilitate ground return signaling in the case of an open fault on a box circuit. A Form 4 power supply operates above ground under normal operating conditions. The Form 4 power supply connects to earth ground to permit ground return signaling only when the equipment at the communications center detects an open fault on a box circuit.

Table 14.4.3.2 describes tests essential to ensuring the integrity of the constant-current (coded) wired public emergency alarm reporting system. Foreign grounds on a metallic box or dispatch circuit can render a portion of the circuit inoperable. For that reason, operators at the communications center must use testing procedures that will result in the prompt discovery of excess voltage or current to ground.

27.5.4.4 Telephone (Series) Reporting Systems.

Sometimes installers add components to an existing (coded) wired reporting system to give it the capability of transmitting and receiving voice alarm signals. In these cases, the telephone (series) reporting system uses the same cable plant as the (coded) wired system. In other cases, a municipality may choose to install a new telephone (series) reporting system or completely replace a (coded) wired system with a new telephone (series) reporting system. These systems follow the same installation requirements in Section 27.7 as do (coded) wired systems. See 27.6.5.1 regarding the requirement to comply with Section 27.7.

27.5.4.4.1 A permanent visual recording device installed in the communications center shall be provided to record all incoming box signals.

FAQ What does the permanent visual recording device record?

The permanent visual recording device records the date, time, and box number but not the content of the voice message. See 27.5.4.4.5 and associated commentary regarding voice transmissions.

27.5.4.4.2 A spare recording device shall be provided for five or more box circuits.

27.5.4.4.3 A second visual means of identifying the calling box shall be provided.

27.5.4.4.4 Audible signals shall indicate all incoming calls from box circuits.

27.5.4.4.5 All voice transmissions from boxes for emergencies shall be recorded with the capability of instant playback.

Specially designed audio recording equipment not only provides an audio log of signal content from the boxes but also allows an operator to recycle instantly to the beginning of each message. This allows operators at the communications center to review unclear messages.

Many communications centers use a common recording system to record all incoming emergency voice communications. This system may include messages from telephone (series) reporting systems, 9-1-1 emergency telephone calls, other public telephone calls, and two-way radio traffic. Modern multichannel, computer-controlled digital recording systems can easily handle many channels of recorded information and give the operators instant access to play back all or any portion of a recorded conversation.

27.5.4.4.6 A voice-recording facility shall be provided for each operator handling incoming alarms to eliminate the possibility of interference.

27.5.4.4.7 Box circuits shall be sufficient in number and laid out so that the areas that would be left without box protection in case of disruption of a circuit do not exceed those covered by 20 properly spaced boxes where all or any part of the circuit is of aerial open-wire, or 30 properly spaced boxes where the circuit is entirely in underground or messenger-supported cable.

This requirement limits the extent of the loss of service to a given area of a municipality if an outage should occur in a box circuit. The size of the area covered by any box circuit will depend on the topography of the particular municipality and whether the box circuit covers a residential or nonresidential area.

Paragraph 27.6.2.1.6 leaves the decision about placing boxes up to the authority having jurisdiction. Guidance in A.27.6.2.1.6 suggests that a person should not have to travel more than one block or 500 ft (150 m) to reach a box in a nonresidential area or two blocks or 800 ft (240 m) in a residential area.

27.5.4.4.8 Where all boxes on any individual circuit and associated equipment are designed and installed to provide for receipt of alarms through the ground in the event of a break in the circuit, the circuit shall be permitted to serve twice the number of aerial open-wire and cable circuits, respectively, as is specified in 27.5.4.4.7.

In some telephone (series) reporting systems, when an actuated alarm box senses that the circuit has an open fault, the system connects the box to earth ground to establish a voice transmission path. Sensing an open circuit, the receiving equipment at the communications center also connects itself to earth ground. This conditioning of the circuit allows the box to transmit its voice signal through earth ground.

If two open faults occur on the circuit, the boxes isolated between the faults cannot transmit a signal. When all telephone (series) boxes have this ability to transmit through earth ground in the case of an open fault on the circuit, the circuit can serve double the number of boxes that it might serve where the boxes do not have this capability. With this feature provided, an aerial open-wire circuit can serve an area equal to that covered by up to 40 properly spaced boxes, and an underground or messenger-supported circuit can serve an area equal to that covered by up to 60 properly spaced boxes.

27.5.4.4.9 The installation of additional boxes in an area served by the number of boxes spaced as indicated in 27.5.4.4.7 shall not constitute geographical overloading of a circuit.

The key phrase to understanding this requirement is "shall not constitute." If technicians install additional boxes in a particular area and connect them to a circuit that already serves properly spaced boxes installed in that geographical area, these additional boxes do not constitute an overload on the circuit. This requirement permits the addition of boxes to serve particular hazards within an area without the need to add more circuits.

27.5.5 Wireless Network.

27.5.5.1 System Arrangement and Operation.

27.5.5.1.1* Type A systems shall comply with 27.5.5.1.1.1 through 27.5.5.1.1.7.

A.27.5.5.1.1 Figure A.27.5.5.1.1 illustrates a Type A receiving network.

N **27.5.5.1.1.1** Two separate receiving networks shall be required for each frequency.

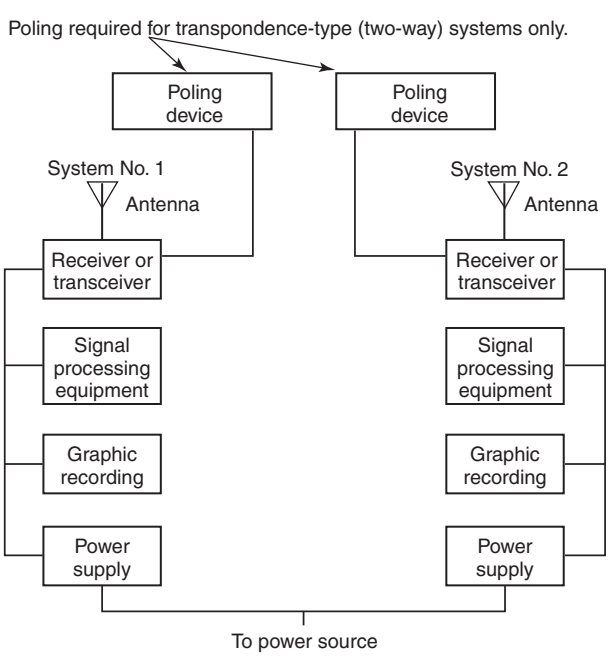

FIGURE A.27.5.5.1.1 *Type A System Receiving Networks.*

27.5.5.1.1.2 Each receiving network shall include the following:

(1) Antenna
(2) RF receiver
(3) Signaling processing equipment
(4) Time/date alarm printer
(5) Audible alerting device
(6) Power supply

Redundant equipment increases the reliability of the wireless network public emergency alarm reporting system. Due to the heavier signaling traffic anticipated with a Type A system, redundant receiving equipment is required. Most wireless network reporting systems operate as one-way radio systems. However, if a public emergency alarm reporting system employs a two-way system, then the polling device shown in Figure A.27.5.5.1.1 would request a test signal from each radio box at least once every 24 hours.

27.5.5.1.1.3 Both receiving networks shall be installed at the communications center.

27.5.5.1.1.4 The failure of one receiving network shall not interfere with the other receiving network's ability to receive messages from boxes.

27.5.5.1.1.5 Where the system configuration is such that a polling device is incorporated into the receiving network to allow remote or selective initiation of box tests, a separate device shall be included in each of the two required receiving networks.

FAQ

How often do the polling devices typically request a test signal from each two-way radio box?

Most wireless network reporting systems operate as one-way radio systems. However, some wireless network systems provide an interrogation and response sequence initiated from the communications center. This interrogation and response sequence monitors the integrity of the radio channel signaling pathway. Typically, the polling device would request a test signal from each two-way radio box at least once every 24 hours.

27.5.5.1.1.6 The polling devices shall be configured for automatic cycle initiation in their primary operating mode, shall be capable of continuous self-monitoring, and shall be integrated into the network(s) to provide automatic switchover and operational continuity in the event of failure of either device.

27.5.5.1.1.7 Test signals from boxes shall not be required to include the date as part of their permanent recording, provided that the date is automatically printed on the recording tape at the beginning of each calendar day.

27.5.5.1.2 Type B systems shall comply with 27.5.5.1.2.1 through 27.5.5.1.2.3.

Δ **27.5.5.1.2.1** For each frequency used, a single, complete receiving network shall be permitted in each emergency response facility, provided that the communications center conforms to 27.5.5.1.1.1 through 27.5.5.1.1.3.

N **27.5.5.1.2.2** Where the jurisdiction maintains two or more alarm reception points in operation, one receiving network shall be permitted to be at each alarm reception point.

27.5.5.1.2.3 Where alarm signals are transmitted to an emergency response facility from the communications center using the wireless-type receiving equipment in the emergency

response facility to receive and record the alarm message, a second receiving network conforming to 27.5.5.1.2.1 shall be provided at each emergency response facility, and that receiving network shall employ a frequency other than that used for the receipt of box messages.

Paragraphs 27.5.5.1.2.1, 27.5.5.1.2.2, and 27.5.5.1.2.3 contain requirements for configurations of Type B wireless network public emergency alarm reporting systems. Some configurations allow each emergency response station to receive the transmission simultaneously from any box in the system. Others receive the box signals at the communications center and automatically repeat the signals to the fire stations.

27.5.5.1.3 A device for producing a permanent graphic recording of all alarm, supervisory, trouble, and test signals received or retransmitted, or both, shall be provided at the communications center.

27.5.5.1.4* Where box message signals to the communications center or acknowledgment of message receipt signals from the communications center to the box are repeated, associated repeating facilities shall conform to the requirements of 27.5.5.1.1.2(1), (2), (3), and (6) and include two separate transmitters.

A.27.5.5.1.4 Figure A.27.5.5.1.4 illustrates the separate functional requirements and power source requirements for systems that function with wireless network repeater systems in accordance with 27.5.5.1.4.

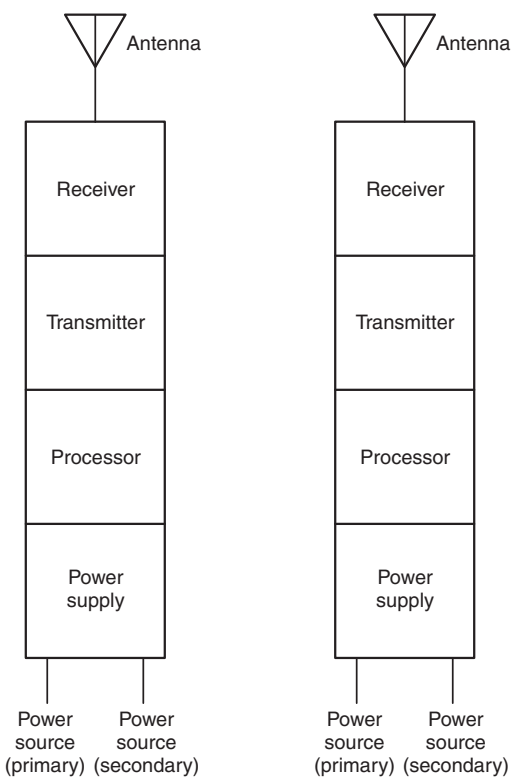

FIGURE A.27.5.5.1.4 *Repeater Wireless Network/System.*

27.5.5.2 Power. Power shall be provided in accordance with 27.5.2.5.

27.5.5.3 Monitoring for Integrity.

Δ **27.5.5.3.1** All wireless box systems shall comply with 27.5.5.3.1.1 and 27.5.5.3.1.2.

N **27.5.5.3.1.1** All wireless box systems shall provide constant monitoring of each radio frequency in use.

N **27.5.5.3.1.2** Both an audible and a visual indication of any sustained signal in excess of a 15-second duration shall be provided for each receiving system at the communications center.

An open fault or ground fault on a (coded) wired public emergency alarm reporting system interferes with the transmission of signals. Similarly, the sustained transmission of a radio carrier signal can interfere with the transmission of signals from the boxes on a wireless network public emergency alarm reporting system. It is required to detect such a sustained carrier signal and provide audible and visual annunciation of such an occurrence.

27.5.5.3.2 The power supplied to all required circuits and devices of the system shall be monitored for integrity.

27.5.5.3.3* Each wireless box shall automatically transmit a test message at least once in each 24-hour period.

A.27.5.5.3.3 See A.27.6.6.2.

The 24-hour test signal safeguards against the catastrophic failure of any single alarm box and its antenna.

Δ **27.5.5.3.4** Receiving equipment associated with wireless-type systems, shall comply with 27.5.5.3.4.1 and 27.5.5.3.4.2.

N **27.5.5.3.4.1** Receiving equipment associated with wireless-type systems, including any related repeater(s), shall be tested at least hourly.

N **27.5.5.3.4.2** The receipt of test messages that do not exceed 60-minute intervals shall meet the requirement in 27.5.5.3.4.1.

The hourly test signal safeguards against the catastrophic failure of the wireless network receiving equipment and its antenna.

Δ **27.5.5.3.5** Radio repeaters upon which receipt of alarms depend shall be provided with dual receivers, transmitters, and power supplies.

N **27.5.5.3.5.1** Failure of the primary receiver, transmitter, or power supply shall cause an automatic switchover to the secondary receiver, transmitter, or power supply.

N **27.5.5.3.5.2** Manual switchover shall be permitted, provided that it is completed within 30 seconds.

The integrity of repeaters is especially important where wireless network public emergency alarm reporting systems serve areas of radio propagation that require the use of repeaters. Redundant equipment helps ensure the continued operation of this critical equipment. The automatic switchover from primary equipment to secondary equipment is preferred. Paragraph 27.5.5.3.5.2 permits manual switchover when accomplished within 30 seconds of the primary equipment failure.

27.5.5.3.6 Trouble signals shall activate a sounding device located where there is always a trained, competent person on duty.

27.5.5.3.7 Trouble signals shall be distinct from alarm signals and shall be indicated by a visual and audible signal.

27.5.5.3.7.1 The audible signal shall be permitted to be common to two or more monitored circuits.

27.5.5.3.7.2 A switch for silencing the audible trouble signal shall be permitted where the visual signal remains operating until the silencing switch is restored to its normal position.

27.5.5.3.8 The audible signal shall be responsive to subsequent faults in other monitored functions prior to restoration of the silencing switch.

27.5.5.4 Physical Protection of Transmission Line. The antenna transmission line between the transmitter and the antenna shall be installed in rigid metal, intermediate metal conduit, or electrical metallic tubing in accordance with *NFPA 70*.

Physical protection is required for the cable connecting the wireless network public emergency alarm reporting system boxes (transmitters) to their respective antennas. Article 810, Part II Receiving Equipment — Antenna Systems, of *NFPA 70®*, *National Electrical Code® (NEC®)*, covers the installation requirements of such antennas.

27.6 Alarm Boxes.

27.6.1* General. The requirements of 27.6.1.1 through 27.6.1.6 shall apply to all alarm boxes.

Δ **A.27.6.1** There are three types of alarm boxes covered under Chapter 27. They are the publicly accessible box, auxiliary box, and master box.

(1) The publicly accessible box has a manual control that can be operated by the public. This type of alarm box is typically located outside on a pole or building and was previously called a street box. The box type was renamed because it is not necessarily located on or near a street.
(2) An auxiliary box is part of an auxiliary alarm system and can be automatically activated either by initiating devices in limited applications or by a protected premises alarm system (Chapter 23). An auxiliary box can be located inside or outside a building.
(3) The master box is a combination box that can be manually operated (publicly accessible) and automatically activated by the auxiliary alarm system (auxiliary box). The master box is typically located outside on a pole or building.

27.6.1.1 Concurrent operation of at least four boxes shall not result in the loss of an alarm.

Each box installed on a wired network circuit must sense that another box has begun to transmit a signal over the common box circuit. The first box withholds transmitting its signal until it senses a clear circuit, and then it transmits the signal. Manufacturers describe this box design as noninterfering and successive.

Boxes installed on a wireless network meet this requirement because the transmission from each box is accomplished in a very short time and repeated sufficiently to ensure that signals from four concurrently operated boxes will be received without interference.

Telephone (series) boxes installed on a wired network rely on the operator receiving the calls to manage those cases where multiple users attempt to talk to the operator at the same time.

27.6.1.2 Boxes and associated equipment, when in an abnormal condition, shall not disable the public emergency alarm reporting system circuit.

Locating publicly accessible alarm boxes along public streets and thoroughfares subjects them to possible damage from vandals, vehicular accidents, and street repair and maintenance operations. When a box is damaged, the remainder of the system must continue to operate normally.

27.6.1.3 Boxes shall be designed so that recycling does not occur when a box-actuating device is held in the actuating position and shall be ready to accept a new signal as soon as the actuating device is released.

This requirement ensures that if a person in the panic of an emergency continues to hold the box actuating lever in the actuated position, the box will not recycle. This feature prevents a box from tying up the circuit. Exhibit 27.5 shows a typical publicly accessible alarm box.

EXHIBIT 27.5

Publicly Accessible Alarm Box. (Source: Gamewell-FCI, Northford, CT)

27.6.1.4* Boxes, when actuated, shall give a visual or audible indication to the user that the box is operating or that the signal has been transmitted to the communications center.

A.27.6.1.4 If the operating mechanism of a box creates sufficient sound to be heard by the user, the requirements are satisfied.

FAQ How is the requirement of 27.6.1.4 typically accomplished?

Most wired network boxes provide an audible indication of actuation from the noise created by the mechanism that drives the mechanical code wheel. Telephone (series) boxes indicate actuation by means of a sound generated in the handset or loudspeaker. Publicly accessible wireless network boxes usually provide a visual means to indicate actuation.

27.6.1.5 Box cases and parts that are accessible to the public shall be permitted to be of nonconductive material.

27.6.1.6 Box cases and parts that are accessible to the public and that are constructed of conductive materials shall be installed in accordance with the requirements of *NFPA 70*, Articles 250 and 760.

27.6.2* Publicly Accessible Alarm Boxes.

A.27.6.2 Publicly accessible alarm boxes were commonly referred to as "street boxes" in previous editions of the Code. Applications of these boxes are no longer limited to street locations.

27.6.2.1 Fundamental Requirements. The requirements of 27.6.2.1.1 through 27.6.2.1.11 shall apply to all publicly accessible alarm boxes.

27.6.2.1.1 Means for actuation of alarms by the public shall be located where they are visible, unobstructed, and readily accessible.

27.6.2.1.2 The box housing shall protect the internal components and shall be identified for the location installed.

27.6.2.1.3 Doors on boxes shall remain operable under adverse climatic conditions, including icing and salt spray.

27.6.2.1.4 Boxes shall be recognizable as such and shall have instructions for use plainly marked on their exterior surfaces.

27.6.2.1.5 Boxes shall be securely mounted on poles, pedestals, or structural surfaces as directed by the authority having jurisdiction.

27.6.2.1.6* The location of publicly accessible boxes shall be designated by the authority having jurisdiction.

A.27.6.2.1.6 Where the intent is for complete coverage, it should not be necessary to travel in excess of one block or 500 ft (150 m) to reach a box. In residential areas, it should not be necessary to travel in excess of two blocks or 800 ft (240 m) to reach a box.

In most cases, municipal fire officials or emergency management officials serve as the authority having jurisdiction.

27.6.2.1.7 Schools, hospitals, nursing homes, and places of public assembly shall have a box located at the main entrance, as directed by the authority having jurisdiction.

27.6.2.1.8 Boxes shall be conspicuously visible and be highlighted with a distinctive color.

27.6.2.1.9 All publicly accessible boxes mounted on support poles shall be identified by a wide band of distinctive colors or signs placed 8 ft (2.44 m) above the ground and visible from all directions wherever possible.

27.6.2.1.10* Location-designating lights shall comply with 27.6.2.1.10.1 and 27.6.2.1.10.2.

A.27.6.2.1.10 The current supply for designating lights at boxes should be secured at lamp locations from the local electric utility company.

Alternating-current power can be permitted to be superimposed on metallic fire alarm circuits for supplying designating lamps or for control or activation of equipment devices for fire alarm or other emergency signals, provided that the following conditions exist:

(1) Voltage between any wire and ground or between one wire and any other wire of the system does not exceed 150 volts, and the total resultant current in any line circuit does not exceed ¼ ampere.
(2) Components such as coupling capacitors, transformers, chokes, or coils are rated for 600-volt working voltage and have a breakdown voltage of at least twice the working voltage plus 1000 volts.
(3) There is no interference with fire alarm service under any conditions.

N **27.6.2.1.10.1** Location-designating lights of distinctive color, visible for at least 1500 ft (460 m) in all directions, shall be installed over boxes.

N **27.6.2.1.10.2** The street light nearest the box, where equipped with a distinctively colored light, shall meet 27.6.2.1.10.1.

Paragraphs 27.6.2.1.8, 27.6.2.1.9, and 27.6.2.1.10 specify methods of identifying the location of publicly accessible alarm boxes. The use of a distinctive box color, the banding of support poles, and the identifying lamp all help citizens seeking emergency aid to promptly locate a box.

27.6.2.1.11 Where boxes are installed inside a structure, the installation shall comply with 27.6.2.1.11.1 through 27.6.2.1.11.4.

27.6.2.1.11.1 The box shall be placed as close as is practicable to the point of entrance of the circuit.

Δ **27.6.2.1.11.2*** Outside plant cables entering buildings or other structures shall be installed in rigid metal conduit, intermediate metal conduit, or electrical metallic tubing.

A.27.6.2.1.11.2 Environmental and ambient conditions should be considered in the selection of the wiring method to be employed.

N **27.6.2.1.11.3** Schedule 80 PVC or RTRC rigid nonmetallic conduit shall be permitted for underground installations, provided that all elbows are rigid or intermediate metal conduit.

N **27.6.2.1.11.4** The installation shall comply with the requirements of the applicable raceway article of *NFPA 70*.

The requirements detailed in 27.6.2.1.11.2 through 27.6.2.1.11.4 help maintain the integrity of any exterior wire connecting to a box installed inside a structure.

27.6.3 Auxiliary Alarm Box.

See definitions for the terms *auxiliary alarm box* in 3.3.12.1, *master alarm box* in 3.3.12.4, and *publicly accessible alarm box* in 3.3.12.5. Exhibits 27.6 and 27.7 show different views of master boxes.

27.6.3.1 Fundamental Requirements. The requirements of 27.6.3.1.1 through 27.6.3.1.6 shall apply to all auxiliary alarm boxes.

27.6.3.1.1 The authority having jurisdiction shall designate the location of the auxiliary box.

Δ **27.6.3.1.2*** Outside plant cables entering buildings or other structures shall be installed in rigid metal conduit, intermediate metal conduit, or electrical metallic tubing.

EXHIBIT 27.6

Auxiliary Alarm Box.

EXHIBIT 27.7

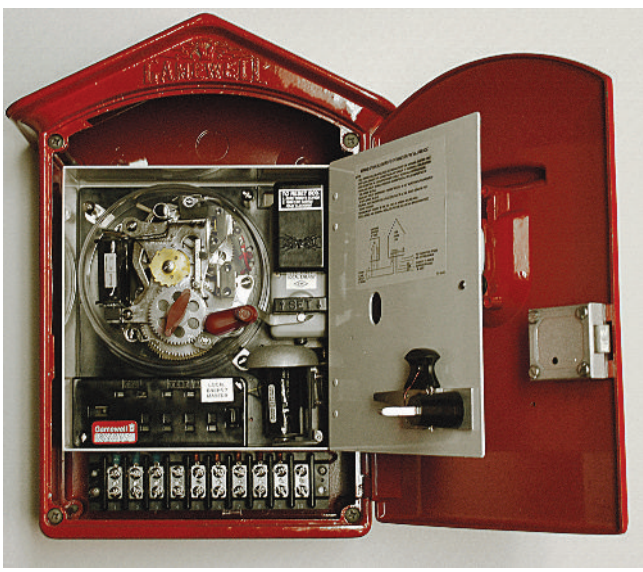

Inside View of Master Alarm Box. (Source: R. B. Allen Co., North Hampton, NH)

A.27.6.3.1.2 Environmental and ambient conditions should be considered in the selection of the wiring method to be employed.

N **27.6.3.1.2.1** Schedule 80 PVC or RTRC rigid nonmetallic conduit shall be permitted for underground installations, provided that all elbows are rigid or intermediate metal conduit.

N **27.6.3.1.2.2** The installation shall comply with the requirements of the applicable raceway article of *NFPA 70*.

27.6.3.1.3* Wiring between the auxiliary alarm system and the auxiliary alarm box or master alarm box shall be installed in rigid metal conduit, intermediate metal conduit, or electrical metallic tubing and shall meet the requirements of pathway survivability Level 2 *(see 12.4.3)*.

There must be a high level of system integrity and survivability between the auxiliary alarm system and the auxiliary alarm box or master alarm box during a fire condition within the protected premises building. This requirement in 27.6.3.1.3 mandates the use of survivable pathway methods as specified in 12.4.3, such as the use of 2-hour fire-rated circuit integrity (CI) cable(s) or a 2-hour fire-rated enclosure or protected area.

A.27.6.3.1.3 Figure A.27.6.3.1.3 shows the interconnecting wiring that is intended to meet Level 2 survivability.

27.6.3.1.4 Where installed outside a structure, the requirements of 27.6.2.1.2 and 27.6.2.1.5 shall apply.

27.6.3.1.5 Where the auxiliary box is a wired box, the requirements of Section 27.7 shall apply.

27.6.3.1.6 Where the auxiliary box is a wireless box, the requirements of 27.6.6 shall apply.

27.6.3.2 Auxiliary Alarm Systems.

FAQ What is the function of an auxiliary alarm system?

For a definition of the term *auxiliary alarm system*, see 3.3.221.1. Auxiliary alarm systems connect a building alarm system to the communications center using the public emergency alarm reporting system. If a community does not have a public emergency alarm reporting system, it obviously cannot have an auxiliary alarm system connection. (See the commentary following 27.6.3.2.3.11.)

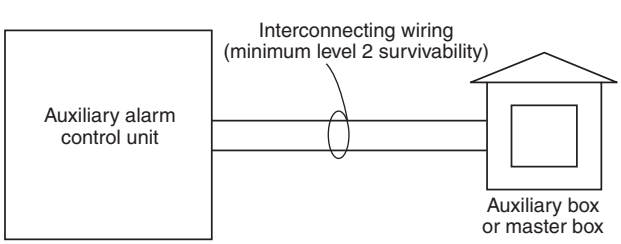

FIGURE A.27.6.3.1.3 *Interconnecting Wiring from Auxiliary Alarm System to Auxiliary Box or Master Box Installed in Rigid Metal Conduit, Intermediate Metal Conduit, or Electrical Metallic Tubing.*

27.6.3.2.1 Application. The equipment and circuits necessary to connect a protected premises to a public emergency alarm reporting system shall comply with the requirements of 27.6.3.2.

27.6.3.2.1.1 Where permitted by the authority having jurisdiction, the use of systems described in Chapter 27 shall be permitted to provide defined reporting functions from or within private premises.

27.6.3.2.1.2 The requirements of Section 27.7 shall also apply to wired auxiliary alarm systems.

27.6.3.2.2 Types of Systems.

Paragraphs 27.6.3.2.2.1(1) and 27.6.3.2.2.1(2) describe the two types of auxiliary systems: the local energy–type and the shunt-type. (See definitions for each type of system in 3.3.221.1.1 and 3.3.221.1.2.) Most authorities having jurisdiction consider the shunt-type system less desirable.

In the local energy system, power from the fire alarm control unit (FACU) at the protected premises energizes an actuating mechanism inside the auxiliary box to cause the auxiliary box to transmit a fire alarm signal. The FACU at the protected premises monitors the integrity of the interconnecting wiring between the FACU and the auxiliary box.

In the shunt-type system, a coil winding of the auxiliary box actuating mechanism diverts operating power from the municipal emergency (fire) alarm circuit and causes current to flow into the protected premises building through a closed electrical loop. Manual fire alarm boxes or sprinkler waterflow initiating devices, with normally closed contacts, connect in series to this shunt loop. Actuation of the manual fire alarm box or waterflow switch will open the shunt loop. This opening causes the municipal emergency alarm circuit power to actuate the mechanism that trips the auxiliary box.

A shunt-type system has very specific requirements and is not permitted to be interconnected to a protected premises system unless the city circuits entering the protected premises are installed in rigid metal conduit or intermediate metal conduit. These wiring methods help to prevent faults in one premises from disabling the city circuit. Faults in the circuit can prevent transmission from other protected premises, leaving them unprotected. See also the accompanying Closer Look feature, which examines some concerns of shunt-type systems.

Closer Look

Shunt-Type System Concerns

Throughout the requirements in 27.6.3, the additional items for shunt-type systems are to overcome some of the potential problems associated with their use. For example, an open fault on the shunt circuit due to a broken wire will cause the auxiliary box to actuate. Further, an open fault on the municipal emergency alarm circuit will prevent the shunt circuit from actuating the auxiliary box because the open fault has effectively disconnected the operating power. Subsequent actuation of the shunt circuit will not cause the public emergency alarm reporting box to initiate an alarm signal. Even though someone may manually pull the auxiliary box and the box will transmit using the threefold arrangement through earth ground, the shunt loop in the building will have no operating power to actuate the auxiliary box. This condition will remain until technicians locate and repair the open fault on the municipal circuit.

A ground fault on the shunt circuit also becomes a ground fault on the public emergency alarm reporting circuit. Because multiple grounds on the municipal circuit can cause the system to malfunction, and because the municipal authorities may not always have easy access to the shunt circuit within a building, detection and clearing of foreign grounds on the shunt circuit become vital but usually are difficult.

27.6.3.2.2.1 Auxiliary alarm systems shall be one of the following types:

(1)* Local energy–type

(a) Local energy–type systems shall be permitted to be of the coded or noncoded type.
(b) Power supply sources for local energy–type systems shall conform to Chapter 10.
(c) Transmitter trouble signals shall be indicated at the control unit and the building fire command center in accordance with 10.15.7.

(2)* Shunt-type

(a) Shunt-type systems shall be noncoded with respect to any remote electrical tripping or activating devices.
(b) All conductors of the shunt circuit shall be installed in accordance with *NFPA 70*, Article 344, for rigid metal conduit, or Article 358, for electrical metallic tubing.
(c) Both sides of the shunt circuit shall be in the same conduit.
(d) Where a shunt loop is used, it shall not exceed a length of 750 ft (230 m) and shall be in conduit.
(e) Conductors of the shunt circuits shall not be smaller than 14 AWG and shall be insulated as prescribed in *NFPA 70*, Article 310.
(f) The power for shunt-type systems shall be provided by the public emergency alarm reporting system.
(g)* A local system made to an auxiliary alarm system by the addition of a relay whose coil is energized by a local power supply and whose normally closed contacts trip a shunt-type master box shall not be permitted.

A.27.6.3.2.2.1(1) The local energy-type system *[see Figure A.27.6.3.2.2.1(1) (a) and Figure A.27.6.3.2.2.1(1) (b)]* is electrically isolated from the public emergency alarm reporting system and has its own power supply. The tripping of the transmitting device does not depend on the current in the system. In a wired circuit, receipt of the alarm by the communications center when the circuit is accidentally opened depends on the design of the transmitting device and the associated communications center equipment (i.e., whether or not the system is designed to receive alarms through manual or automatic ground operational facilities). In a radio box–type system, receipt of the alarm by the communications center depends on the proper operation of the radio transmitting and receiving equipment.

A.27.6.3.2.2.1(2) The shunt-type system *[see Figure A.27.6.3.2.2.1(2) (a) and Figure A.27.6.3.2.2.1(2) (b)]* is electrically connected to, and is an integral part of, the public emergency alarm reporting system. A ground fault on the auxiliary circuit is a fault on the public

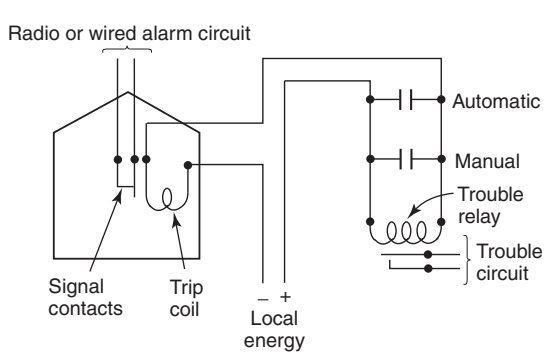

FIGURE A.27.6.3.2.2.1(1) (A) *Local Energy-Type Auxiliary Alarm System — Radio or Wired.*

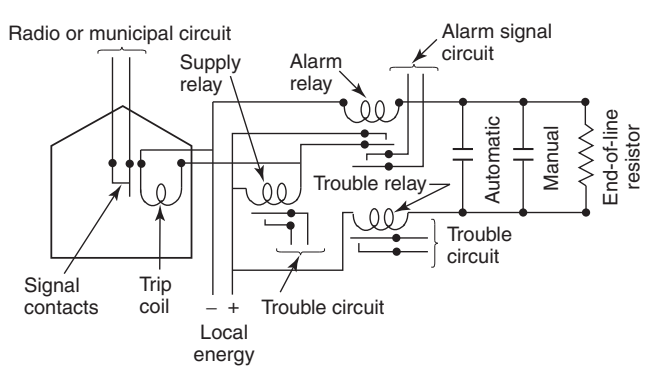

FIGURE A.27.6.3.2.2.1(1) (B) *Local Energy-Type Auxiliary Alarm System with Supply and Alarm Relay — Radio or Wired.*

emergency alarm reporting system circuit, and an accidental opening of the auxiliary circuit sends a needless (or false) alarm to the communications center. An open circuit in the transmitting device trip coil is not indicated either at the protected property or at the communications center. Also, if an initiating device is operated, an alarm is not transmitted, but an open circuit indication is given at the communications center. If a public emergency alarm reporting system circuit is open when a connected shunt-type system is operated, the transmitting device does not trip until the public emergency alarm reporting system circuit returns to normal, at which time the alarm is transmitted, unless the auxiliary circuit is first returned to a normal condition.

Additional design restrictions for shunt-type systems are found in laws or ordinances.

A.27.6.3.2.2.1(2) (g) See Figure A.27.6.3.2.2.1(2) (b).

Δ **27.6.3.2.2.2** The interface of the two types of auxiliary alarm systems with the three types of public emergency alarm reporting systems shall be in accordance with Table 27.6.3.2.2.2.

Δ ***TABLE 27.6.3.2.2.2*** *Application of Public Emergency Alarm Reporting Systems with Auxiliary Alarm Systems*

Reporting Systems	*Local Energy-Type*	*Shunt-Type*
Wired	Yes	Yes
Wireless	Yes	No
Telephone series	Yes	No

Δ **27.6.3.2.2.3** The application of the two types of auxiliary alarm systems shall be limited to the initiating devices specified in Table 27.6.3.2.2.3.

Δ ***TABLE 27.6.3.2.2.3*** *Application of Initiating Devices with Auxiliary Alarm Systems*

Initiating Devices	*Local Energy-Type*	*Shunt-Type*
Manually actuated alarm-initiating device	Yes	Yes
Waterflow or actuation of the fire extinguishing system(s) or suppression system(s)	Yes	Yes
Automatic detection devices	Yes	No

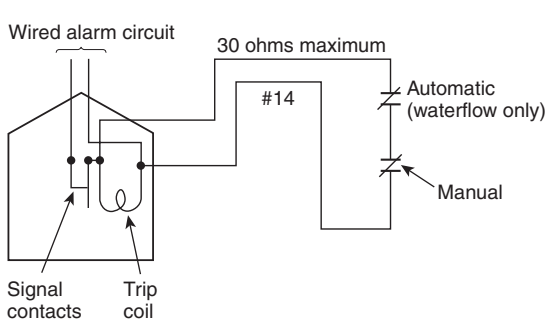

FIGURE A.27.6.3.2.2.1(2) (a) *Shunt-Type Auxiliary Alarm System (Permitted).*

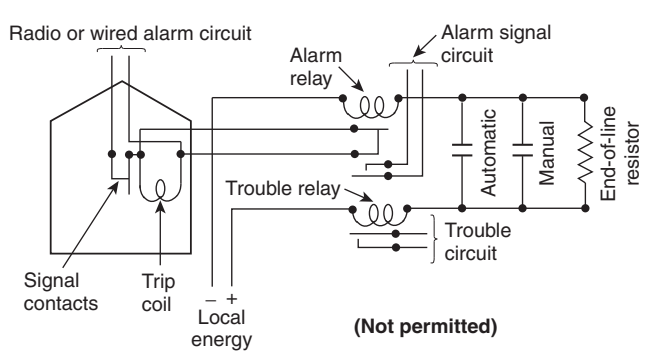

FIGURE A.27.6.3.2.2.1(2) (b) *Shunt-Type Auxiliary Alarm System (Not Permitted).*

27.6.3.2.3 System Arrangement and Operation.

27.6.3.2.3.1 Shunt-type auxiliary alarm systems shall be arranged so that one auxiliary transmitter does not serve more than 100,000 ft^2 (9290 m^2) total area or as otherwise permitted by the authority having jurisdiction.

27.6.3.2.3.2 A separate auxiliary transmitter shall be provided for each building, or where permitted by the authority having jurisdiction, for each group of buildings of single ownership or occupancy.

27.6.3.2.3.3 The same box shall be permitted to be used as a public emergency alarm reporting system box and as a transmitting device for an auxiliary alarm system where permitted by the authority having jurisdiction, provided that the box is located at the outside of the entrance to the protected property.

27.6.3.2.3.4 Where 27.6.3.2.3.3 is applied, the authority having jurisdiction shall be permitted to require the box to be equipped with a signal light to differentiate between automatic and manual operation, unless local outside alarms at the protected property serve the same purpose.

27.6.3.2.3.5 The transmitting device shall be located as required by the authority having jurisdiction.

27.6.3.2.3.6 Unless otherwise modified by 27.6.3.2.3.7, the system shall be designed and arranged so that a single fault on the auxiliary alarm system shall not jeopardize operation of the public emergency alarm reporting system and shall not, in case of a single fault on either the auxiliary or public emergency alarm reporting system, transmit a false alarm on either system.

N **27.6.3.2.3.7** The requirements of 27.6.3.2.3.6 shall not apply to shunt systems complying with 27.6.3.2.2.1(2).

27.6.3.2.3.8 A means that is available only to the agency responsible for maintaining the public emergency alarm reporting system shall be provided for disconnecting the auxiliary loop to the connected property.

FAQ What method is often used to satisfy the requirements of 27.6.3.2.3.8?

If an installer makes a connection to the public emergency alarm reporting system in accordance with the requirements of 27.6.3, paragraph 27.6.3.2.3.8 requires that the installer provide a means to disconnect the protected premises connection. Only the authority having jurisdiction over the public emergency alarm reporting system can have access to this disconnecting means. Locating the disconnecting means inside a locked auxiliary box will satisfy this requirement.

Some municipalities issue a special license or permit for contractors that allows them to have keys that will access the auxiliary boxes. This permit allows the contractor to disconnect the protected premises connection during testing and maintenance of the fire alarm system at the protected premises. Permits are issued only to qualified personnel that have received special training on the requirements established by the authority having jurisdiction for the system.

27.6.3.2.3.9 Notification shall be given to the designated representative of the property when the auxiliary box is not in service.

Δ **27.6.3.2.3.10** An auxiliary alarm system shall be used only in connection with a public emergency alarm reporting system that is approved for the service.

N **27.6.3.2.3.11** A system approved by the authority having jurisdiction shall meet the requirement in 27.6.3.2.3.10.

If a community has not provided a public emergency alarm reporting system, no auxiliary alarm system can exist. An auxiliary alarm system depends on the public emergency alarm reporting system to transmit signals from the protected premises to the communications center.

27.6.3.2.3.12 Permission for the connection of an auxiliary alarm system to a public emergency alarm reporting system, and acceptance of the type of auxiliary transmitter and its activating mechanism, circuits, and components connected thereto, shall be obtained from the authority having jurisdiction.

Δ **27.6.3.2.3.13** Paragraph 27.6.3.2 shall not require the use of audible alarm signals other than those necessary to operate the auxiliary alarm system.

N **27.6.3.2.3.14** Where it is desired to provide evacuation signals in the protected property, the notification appliances, circuits, and controls shall comply with the provisions of Chapter 23 in addition to the provisions of 27.6.3.2.

An auxiliary alarm system does not have the components necessary to notify occupants in a building of the need to evacuate or relocate to areas of refuge within the building. An authority having jurisdiction requiring such notification will need to require the installation of a protected premises fire alarm system with initiating devices and notification appliances in accordance with Chapters 1, 7, 10, 12, 14, 17, 18, and 23.

27.6.3.2.3.15 Where an auxiliary alarm system is in an alarm condition that has been acknowledged, deactivated, or bypassed, subsequent actuation of initiating devices on other initiating device circuits or subsequent actuation of addressable initiating devices on signaling line circuits shall cause an alarm signal to be transmitted to the communications center.

Subsequent alarms must be transmitted to the communications center. Alarms that have been acknowledged or silenced should not retransmit when a new alarm has been initiated. Only the new alarm should transmit a signal to the communications center. Old or original alarms should only retransmit after they have been reset or restored to a normal condition on the auxiliary alarm system.

27.6.3.2.3.16 Where an auxiliary transmitter is located within a private premises, it shall be installed in accordance with 27.6.2.1.11 and 27.7.2.

27.6.3.2.3.17 Where data communications between a microprocessor-based control unit and an auxiliary alarm system are utilized, they shall comply with all of the requirements in 27.6.3.2.3.17(A) through 27.6.3.2.3.17(C).

(A) The monitoring for integrity shall include communications test messages transmitted between the control unit and the auxiliary alarm system.

(B) The communications test message shall be initiated by either the control unit or the auxiliary alarm system and shall require a response from the corresponding unit, and the following shall apply:

(1) An invalid response or no response from the control unit or the auxiliary alarm system shall be recognized as a communications failure.

(2) A communications failure shall initiate a specific communications failure trouble message, which shall be transmitted from the auxiliary alarm system and shall be automatically indicated within 200 seconds at the communications center.

(3) A trouble condition in 27.6.3.2.3.17(B) (2) shall activate an audible and distinctive visual signal at the auxiliary box indicating a communications failure.
(4) A trouble condition shall be indicated at the control unit and the building fire command center in accordance with 10.15.7.

(C) Where a separate device is required to interface the control unit to the auxiliary alarm system, all communication paths shall be monitored for integrity and shall comply with 27.6.3.2.3.17.

Paragraph 27.6.3.2.3.17 provides additional requirements for the use of data communications between a microprocessor-based protected premises FACU and an auxiliary alarm system. These requirements ensure reliability of the system by maintaining the integrity of the communications pathway and providing a means of monitoring the interconnecting communications pathway for integrity.

27.6.4 Master Alarm Boxes. Master alarm boxes shall comply with the requirements of 27.6.2 and 27.6.3.

27.6.5 Wired Network Boxes. The requirements of Section 27.7 shall apply to wired network boxes.

Publicly accessible wired network boxes initiate a coded signal from an actuated box by interrupting the current flow through a metallic circuit with telegraphic impulses. Most wired network boxes operate by means of a spring-wound mechanical clocklike movement that drives a code wheel. Teeth on the code wheel open and close the circuit in a predetermined pattern. The mechanism drives the code wheel to make at least four revolutions, sending the coded signal four times.

In addition to mechanical boxes, electronic wired network boxes are available. These boxes have all of the features and functionality of mechanical boxes, but the telegraphic impulses are produced electronically rather than by opening and closing contacts. Exhibit 27.8 shows an electronic auxiliary alarm box.

27.6.5.1 Telephone Boxes. The requirements of Section 27.7 shall also apply to telephone boxes.

Public emergency alarm reporting system telephone boxes use an existing (coded) wired system cable plant to connect telephone boxes to the communications center. This connection permits the

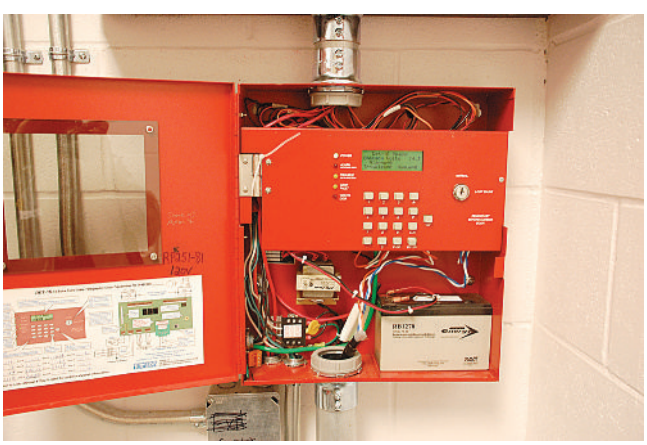

EXHIBIT 27.8

Electronic Auxiliary Alarm Box. (Source: Jeffrey G. Knight, Superintendent of Fire Alarm & Communications, Newton Fire Department, Newton, MA)

municipality or government agency to retrofit some or all of the wired network boxes for two-way voice communications. Some of these units use telephone handsets, while others use a hands-free loudspeaker installed under a heavy protective grill. This telephone box, commonly referred to as a telephone (series) reporting system, connects the boxes to the cable plant electrically in series, in the same fashion as wired network boxes. Coding for these boxes is generally accomplished by using a dual tone audio encoder. Once the box is decoded at the communications center, the box number or an alphanumeric message with the box location information is displayed.

27.6.5.1.1 Where a handset is used, the caps on the transmitter and receiver shall be secured to reduce the probability of the telephone box being disabled due to vandalism.

27.6.5.1.2 Telephone boxes shall be designed to allow the communications center operator to determine whether or not the telephone box has been restored to normal condition after use.

27.6.6 Wireless Network Boxes.

Publicly accessible wireless network boxes operate on a designated frequency assigned by the FCC. When actuated, wireless network boxes send a data burst that contains information on the status of the specific box. This data burst may contain one or more signals and permits wireless network boxes to transmit signals relating to more than simply fire alarm signals. (See the commentary following 27.1.6 and 27.2.2.)

27.6.6.1 In addition to the requirements of this Code, wireless boxes shall be designed and operated in compliance with all applicable rules and regulations of the Federal Communications Commission (FCC) or, where required by other governing laws, the National Telecommunications and Information Administration (NTIA).

27.6.6.2* Each wireless box shall automatically transmit a test message at least once in each 24-hour period.

A.27.6.6.2 The transmission of an actual emergency-related message, initiated at the same time it is preselected for a test message, and, in turn, preempts said test message, must satisfy the intent of 27.6.6.2.

A daily test timer initiates a signal from the box at least once each day. This signal serves as a means of monitoring the integrity of the box, its antenna, and its transmission channel to verify that the box remains operable.

27.6.6.3 Wireless network boxes shall be capable of transmitting no less than three specific signals to the communications center, in addition to the box number, with priority as follows:

(1) Alarm
(2) Tamper
(3) Test

27.6.6.4 Wireless boxes shall transmit to the communications center with priority as follows:

(1) No less than two repetitions for “alarm”
(2) No less than one repetition for “tamper”
(3) No less than one repetition for “test”

27.6.6.5 Where wireless network boxes transmit more than one alarm signal, in addition to those in 27.6.6.3, each such signal shall be individually identifiable.

27.6.6.6 Where wireless network boxes transmit more than one alarm signal, they shall be designed to prevent the loss of supplemental or concurrently activated signals.

27.6.6.7* Where wireless network boxes transmit more than one alarm signal, the priority of each alarm shall be as assigned by the authority having jurisdiction.

A.27.6.6.7 Examples of priority levels as follows:

(1) Priority 1 — fire
(2) Priority 2 — ECS
(3) Priority 3 — medical
(4) Priority 4 — supervisory
(5) Priority 5 — monitored for integrity signals
(6) Priority 6 — tamper
(7) Priority 7 — test

Additionally, within each signal category, additional priorities can be required such as Fire 1, Fire 2, Fire 3, and so forth.

27.6.6.8 An actuating device held or locked in the activated position shall not prevent the activation and transmission of other signals.

27.6.6.9 The primary power source for wireless boxes shall be permitted to be from one or more of the following, as approved by the authority having jurisdiction:

(1) Utility distribution system
(2) Solar photovoltaic power system
(3) User power
(4) Self-powered, using either an integral battery or other stored energy source

FAQ How many options are available for primary power?

There are four permitted discrete power sources for wireless network boxes in 27.6.6.9. The requirements in 27.6.6.10 through 27.6.6.13.3.2 provide details for each power source. A designer of wireless network boxes can use these sources in combination to provide enhanced system operability.

System Design Tip

27.6.6.10 Boxes powered by a utility distribution system shall comply with 27.6.6.10.1 through 27.6.6.10.6.

Δ **27.6.6.10.1** Boxes shall comply with 27.6.6.10.1.1 and 27.6.6.10.1.2.

N **27.6.6.10.1.1** Boxes shall have an integral standby, sealed, rechargeable battery that is capable of powering box functions for at least 60 hours in the event of primary power failure.

N **27.6.6.10.1.2** Transfer to standby battery power shall be automatic and without interruption to box operation.

27.6.6.10.2 A local trouble indication shall activate upon primary power failure.

27.6.6.10.3 Boxes operating from primary power shall be capable of operation with a dead or disconnected battery.

27.6.6.10.4 A battery charger shall be provided in compliance with 10.6.10.3, except as modified in 27.6.6.10.

27.6.6.10.5 When the primary power has failed, boxes shall transmit a power failure message to the communications center as part of subsequent test messages until primary power is restored.

27.6.6.10.6 A low-battery message shall be transmitted to the communications center where the remaining battery standby time is less than 54 hours.

27.6.6.11 Boxes powered by a solar photovoltaic system shall comply with 27.6.6.11.1 through 27.6.6.11.5.

27.6.6.11.1 Solar photovoltaic power systems shall provide box operation for not less than 6 months.

27.6.6.11.2 Solar photovoltaic power systems shall be monitored for integrity.

27.6.6.11.3 The battery shall have power to sustain operation for a minimum period of 15 days without recharging.

Δ **27.6.6.11.4** Boxes shall comply with 27.6.6.11.4.1 and 27.6.6.11.4.2.

N **27.6.6.11.4.1** The box shall transmit a trouble message to the communications center when the charger has failed for more than 24 hours.

N **27.6.6.11.4.2** The trouble message shall be part of all subsequent transmissions.

27.6.6.11.5 Where the remaining battery standby duration is less than 10 days, a low-battery message shall be transmitted to the communications center.

27.6.6.12 User-powered boxes shall have an automatic self-test feature.

User-powered boxes can store additional power each time a user actuates the box beyond what is needed to transmit the immediate signal. This stored power can then operate the daily test feature. In other cases, one of the other power sources may supply power to the user-powered box for the daily test feature.

27.6.6.13 Self-powered boxes shall comply with 27.6.6.13.1 through 27.6.6.13.3.

27.6.6.13.1 Self-powered boxes shall operate for a period of not less than 6 months.

Δ **27.6.6.13.2** Self-powered boxes shall comply with 27.6.6.13.2.1 and 27.6.6.13.2.2.

N **27.6.6.13.2.1** Self-powered boxes shall transmit a low-power warning message to the communications center for at least 15 days prior to the time the power source will fail to operate the box.

N **27.6.6.13.2.2** The low-power warning message shall be part of all subsequent transmissions.

27.6.6.13.3 Self-powered boxes shall comply with 27.6.6.13.3.1 and 27.6.6.13.3.2.

N **27.6.6.13.3.1** Use of a charger to extend the life of a self-powered box shall be permitted where the charger does not interfere with box operation.

N **27.6.6.13.3.2** The box shall be capable of operation for not less than 6 months with the charger disconnected.

27.7 Public Cable Plant.

Metallic and fiber-optic cabling systems and interconnections between alarm transmission equipment and alarm-receiving equipment shall comply with the requirements of Section 27.7.

27.7.1 Requirements for Metallic and Fiber-Optic Systems — Metallic and Fiber-Optic Interconnections.

27.7.1.1 Circuit Conductors and Fiber-Optic Strands.

27.7.1.1.1 Exterior metallic, fiber-optic cable and wire, other than those provided by a public utility on a lease basis, shall conform to International Municipal Signal Association (IMSA) specifications or an approved equivalent.

IMSA publishes wire and cable specifications for use in the installation of public emergency alarm reporting systems.

Some jurisdictions lease conductors for their (coded) wired or telephone (series) public emergency alarm reporting systems from utilities, such as a local telephone or television cable company, rather than install and maintain their own conductors. When conductors are leased, the provider determines the specifications for the conductors in the same manner that the specifications for their normal communications conductors are determined. The requirements of 27.7.1.1.1 apply to installations "other than those provided by a public utility on a lease basis."

27.7.1.1.2 Where a public box is installed inside a building, the circuit from the point of entrance to the public box shall be installed in rigid metal conduit, intermediate metal conduit, or electrical metallic tubing in accordance with *NFPA 70*.

FAQ What is the purpose of the requirement in 27.7.1.1.2?

The purpose is to limit the exposure of the public emergency alarm reporting system circuit to mechanical damage within a building. If an installer runs the emergency alarm reporting circuit throughout the building, mechanical damage could occur to the circuit concurrent with the transmission of an alarm signal and defeat the protection afforded by the alarm system.

Although not specifically covered by 27.7.1.1.2, a fire could also burn through a portion of the public emergency alarm reporting system circuit before the system transmits an alarm signal. The installation of the circuit in conduit or raceway alone would not prevent a fire from damaging the circuit. Though not required by 27.7.1.1.2, an installer could use a cable type listed for fire survivability to further protect the circuit against possible fire damage. See Section 12.4 for the requirements for pathway survivability. Also see 27.7.2.1.2 for other physical protection requirements.

27.7.1.1.3 Wires and fiber-optic strands shall be terminated so as to prevent breaking from vibration or stress.

27.7.1.1.4 Circuit conductors and fiber-optic cables on terminal racks shall be identified and isolated from conductors of other systems wherever possible and shall be protected from mechanical injury.

27.7.1.2 Cables. The requirements of 27.7.1.2 shall apply to 27.7.1.3 through 27.7.1.6.

27.7.1.2.1 Exterior metallic and fiber-optic cable and wire shall conform to IMSA specifications or an approved equivalent.

27.7.1.2.2 Overhead, underground, or direct burial cables shall be specifically approved for the purpose.

One way to satisfy this requirement is to use IMSA specification–type wire and cable as required in 27.7.1.1.1. Cables installed underground inside mechanical protection are required to have conductors

suitable for wet locations. Cables installed underground without other mechanical protection are required to have conductors suitable for direct burial.

27.7.1.2.3 Metallic and fiber-optic cables used in interior installations shall comply with *NFPA 70* and shall be installed in accordance with the manufacturer's installation instructions and practices.

27.7.1.2.4 Conductors and/or fiber-optic strands used to transmit signals of other systems that are under the control of a governmental agency shall be permitted to be contained within the same multi-conductor cable as conductors and/or fiber-optic strands used to transmit signals of public emergency alarm reporting systems.

Occasionally, municipalities that maintain their own governmental service telephone system, centralized traffic control, or monitoring systems run the wiring or fiber-optic strands for those services in the same cable as the public emergency alarm reporting system.

27.7.1.2.5 By special permission as defined in *NFPA 70*, cables not under the control of a governmental agency shall be permitted to contain conductors and/or fiber-optic strands used to transmit signals of a public emergency alarm reporting system.

27.7.1.2.6 Signaling wire and fiber-optic cables containing metallic protection or strength members shall comply with 27.7.1.2.6.1 and 27.7.1.2.6.2.

27.7.1.2.6.1 Signaling wires supplied by a power source having a voltage and/or current rating sufficient to introduce a hazard shall be installed in accordance with *NFPA 70*, Article 760, Part II.

See Articles 760 and 800 of the *NEC* for protection requirements.

27.7.1.2.6.2 Fiber-optic cables containing metallic protection or strength members shall be grounded and protected in accordance with *NFPA 70*.

See Article 770 of the *NEC* for protection requirements.

EXHIBIT 27.9

Megohmmeter. (Source: Megger®, Dallas, TX)

Δ **27.7.1.2.7** Metallic cables shall comply with 27.7.1.2.7.1 and 27.7.1.2.7.2.

N **27.7.1.2.7.1** All metallic cables, with all taps and splices made, shall be tested for insulation resistance when installed but before connection to terminals.

N **27.7.1.2.7.2** Tests shall indicate an insulation resistance of at least 200 megohms per mile between any one conductor and all other conductors, the sheath, and the ground.

Installers must test cables and splices with a megohmmeter to assess the dielectric strength of the insulation (see Exhibit 27.9). Installers must conduct this test before they connect any devices or appliances to the cable plant.

27.7.1.3 Underground Cables.

To maintain the operational integrity of a public emergency alarm reporting system, the requirements of 27.7.1.3 are to protect underground metallic and fiber-optic cables from exposure to potential mechanical injury.

27.7.1.3.1 Underground metallic and fiber-optic cables in duct or direct burial shall be permitted to be brought aboveground only at locations approved by the authority having jurisdiction.

27.7.1.3.1.1 Protection from physical damage or heat incidental to fires in adjacent buildings shall be provided.

27.7.1.3.2 Only fiber-optic and power-limited cables and conductors shall be permitted to be located in duct systems and manholes that contain power-limited public emergency alarm reporting system conductors.

27.7.1.3.3 Where located in duct systems or manholes that contain power circuit conductors over 250 volts to ground, metallic and fiber-optic emergency alarm cables shall be located as far as possible from such power cables and shall be separated from them by a noncombustible barrier or other means approved by the authority having jurisdiction to protect the emergency alarm cables from physical damage.

27.7.1.3.4 All cables installed in manholes shall be racked and marked for identification.

27.7.1.3.5 Raceways or ducts entering buildings from underground duct systems shall be effectively sealed with an identified sealing compound or other means acceptable to the authority having jurisdiction to prevent the entrance of moisture or gases from the underground duct system.

27.7.1.3.6 All cable joints shall be located in manholes, emergency response facilities, or other accessible locations acceptable to the authority having jurisdiction where equivalent protection is provided to minimize physical damage to the cable.

27.7.1.3.6.1 Cable joints shall be made to provide and maintain conductivity, optical continuity for fiber-optic cable, insulation, and protection at least equal to that afforded by the cables that are joined.

27.7.1.3.6.2 Open cable ends shall be sealed against moisture.

27.7.1.3.7 Direct-burial cable, without enclosure in ducts, shall be laid in grass plots, under sidewalks, or in other places where the ground is not likely to be opened for other underground construction.

27.7.1.3.7.1 Where splices are made, such splices shall be accessible for inspection and tests.

27.7.1.3.7.2 Such cables shall be buried at least 18 in. (460 mm) deep and, where crossing streets or other areas likely to be opened for other underground construction, shall be in duct or conduit.

27.7.1.4 Aerial Construction.

FAQ What is the primary purpose of 27.7.1.4 and 27.7.1.5?

To maintain the operational integrity of a public emergency alarm reporting system, the requirements of 27.7.1.4 and 27.7.1.5 are provided to protect aerial cables and leads down poles to reduce the risk of mechanical injury and electrical failure.

27.7.1.4.1 Cables containing conductors and/or fiber-optic strands used to transmit signals of public emergency alarm reporting systems shall be located below all other cables and conductors, except those used for communications purposes.

ANSI/IEEE C2, *National Electrical Safety Code* (NESC), contains requirements for the relative position of public emergency alarm reporting system wiring with respect to other aerial supported wiring on utility poles. (See 27.7.2.1.1 for specific reference to the requirements of NESC.)

27.7.1.4.1.1 Precautions shall be provided where passing through trees, under bridges, over railroads, and at other places where subject to physical damage.

27.7.1.4.1.2 Conductors and cables for public emergency alarm reporting system use shall not be attached to a crossarm that carries electric light and power conductors.

N **27.7.1.4.1.3** Conductors that operate at 250 volts or less and are part of the public emergency alarm reporting system shall be permitted to share the crossarm with conductors and cables for public emergency alarm reporting systems.

27.7.1.4.2 Aerial cable shall be supported by messenger wire of approved tensile strength or shall conform to one of the following:

(1) IMSA specifications as a self-supporting cable assembly or an approved equivalent
(2) Fiber-optic cable with integral supporting means or all-dielectric self-supporting (ADSS) type

Δ **27.7.1.4.3** Single wire shall comply with 27.7.1.4.3.1 and 27.7.1.4.3.2.

N **27.7.1.4.3.1** Single wire shall meet IMSA specifications and conform to one of the following:

(1) Be at least No. 10 Roebling gauge if of galvanized iron or steel
(2) Be at least 10 AWG if of hard-drawn copper
(3) Be at least 12 AWG if of approved copper-covered steel
(4) Be at least 6 AWG if of aluminum.

N **27.7.1.4.3.2** Span lengths shall not exceed the manufacturer's recommendations.

27.7.1.4.4 Wires to buildings shall contact only intended supports.

N **27.7.1.4.5** Wires to buildings shall enter through an approved weatherhead or sleeves slanting upward and inward.

N **27.7.1.4.6** Drip loops shall be formed on wires outside of buildings.

27.7.1.5 Leads Down Poles.

27.7.1.5.1 Leads down poles shall be protected from physical damage. Any metallic covering shall form a continuous conducting path to ground. Installation, in all cases, shall prevent water from entering the conduit or box.

27.7.1.5.2 Leads to boxes shall have 600-volt insulation listed or approved for wet locations, as defined in *NFPA 70*.

27.7.1.6 Wiring Inside Buildings.

To maintain the operational integrity of a public emergency alarm reporting system, the requirements of 27.7.1.6 address the protection of wiring inside a building. This protection limits the risk of mechanical injury or electrical failure and ensures that the wiring does not contribute to fire spread in a building.

27.7.1.6.1 At the communications center, all conductors, cables, and fiber-optic cables shall extend as directly as possible to the operations center in conduits, ducts, shafts, raceways, or overhead racks and troughs listed or identified as suitable to provide protection against physical damage.

27.7.1.6.2* Where installed in buildings, conductors and fiber-optic cables shall be installed in any of the following wiring methods:

(1) Electrical metallic tubing
(2) Intermediate metal conduit
(3) Rigid metal conduit

A.27.7.1.6.2 There could be environmental conditions that necessitate the use of rigid nonmetallic conduit.

N **27.7.1.6.2.1** Where installed in buildings, conductors and fiber-optic cables shall be permitted to be installed in rigid nonmetallic conduit where approved by the authority having jurisdiction.

Δ **27.7.1.6.3** Conductors and fiber-optic cables shall comply with 27.7.1.6.3.1 and 27.7.1.6.3.2.

N **27.7.1.6.3.1** Conductors and fiber-optic cables shall have an approved insulation.

N **27.7.1.6.3.2** The insulation or other outer covering shall be flame-retardant and moisture resistant.

Δ **27.7.1.6.4** Conductors and fiber-optic cables shall comply with 27.7.1.6.4.1 and 27.7.1.6.4.2.

27.7.1.6.4.1 Conductors and fiber-optic cables shall be installed as far as possible without splices or joints.

27.7.1.6.4.2 Splices or joints shall be permitted only in listed junction or terminal boxes.

27.7.1.6.5 Enclosures shall comply with 27.7.1.6.5.1 and 27.7.1.6.5.2.

N **27.7.1.6.5.1** Enclosures containing public emergency alarm reporting system circuits shall be provided with red covers or doors.

N **27.7.1.6.5.2** The words "public emergency alarm reporting system circuit" shall be clearly marked on all enclosures, terminal boxes, and junction locations to prevent unintentional interference.

27.7.1.6.6 Wire and fiber-optic terminals, terminal boxes, splices, and joints shall conform to *NFPA 70*.

N **27.7.1.6.7** Metallic and fiber-optic cables and wiring exposed to a hazard shall be protected in an approved manner.

N **27.7.1.6.8** Metallic and fiber-optic cable terminals and cross-connecting facilities shall be located in or adjacent to the operations room.

27.7.1.6.9 Where signal conductors, non-dielectric fiber-optic cables, and electric light and power wires are run in the same shaft, they shall be separated by at least 2 in. (51 mm), or either system shall be encased in a noncombustible enclosure.

27.7.2 Signal Transmission and Receiving Circuits. Signal transmission and receiving circuits shall comply with the requirements of 27.7.2.1 and 27.7.2.2.

27.7.2.1 General.

27.7.2.1.1 ANSI/IEEE C2, *National Electrical Safety Code*, shall be used as a guide for the installation of outdoor circuitry.

Public and private electric company utilities, public and private telephone utilities, and public and private community antenna television company utilities use the *NESC*. The *NESC* describes the placement and spacing of outdoor aerial cable installations and ensures the safe operation of the associated systems.

27.7.2.1.2 Installation shall provide for the following:

(1) Continuity of service
(2) Protection from mechanical damage
(3) Disablement from heat that is incidental to fire
(4) Damage by floods, corrosive vapors, or other causes

27.7.2.1.3 Open local circuits within single buildings shall be permitted in accordance with Chapter 23.

The requirements of Chapter 23 apply to protected premises alarm and signaling system circuits that do not serve as a part of the public emergency alarm reporting system.

27.7.2.1.4 All circuits shall be routed so as to allow tracing of circuits for trouble.

Δ **27.7.2.1.5** Circuits shall not pass over, under, or through or be attached to buildings or property not owned by or under the control of the authority having jurisdiction or the agency responsible for maintaining the system.

N **27.7.2.1.5.1** The requirements of 27.7.2.1.5 shall not apply where the circuit is terminated at a public emergency alarm reporting system initiating device on the building or property.

At one time, installers strung the circuits of the public emergency alarm reporting systems from building to building throughout a city. This paragraph prohibits that practice. Engineers learned that fires in those buildings would damage the circuits, thereby placing the operational integrity of the public emergency alarm reporting system in jeopardy.

Paragraph 27.7.2.1.5.1 permits the circuit to terminate at a public emergency alarm reporting system initiating device on the protected premises. However, a means must exist to disconnect the circuit from the building. This disconnecting means permits isolation of the device inside the protected premises in the event of a fault on the conductors that run through the protected premises. See 27.6.3.2.3.8 regarding the disconnecting means for auxiliary alarm systems.

27.7.2.2 Interior Box Circuits.

27.7.2.2.1 A means accessible only to the authority having jurisdiction or the agency responsible for maintaining the public emergency alarm reporting systems shall be provided to disconnect all circuit conductors inside a building or other structure.

FAQ Who is permitted to have access to the disconnecting means for an auxiliary circuit?

If an installer makes a connection to the public emergency alarm reporting system in accordance with the requirements of 27.6.3, paragraph 27.7.2.2.1 requires that the installer provide a means to disconnect the protected premises connection. Only the authority having jurisdiction over the public emergency alarm reporting system can have access to this disconnecting means. Locating the disconnecting means inside a locked auxiliary box will satisfy this requirement.

Some municipalities issue a special license or permit for contractors that allows them to have keys that will access the auxiliary boxes. This permit allows the contractor to disconnect the protected premises connection during testing and maintenance of the alarm system at the protected premises. Permits are issued only to qualified personnel that have received special training on the requirements established by the authority having jurisdiction for the system.

27.7.2.2.2 Definite notification shall be given to the designated building representative when the interior box(es) is out of service.

27.7.3* Circuit Protection.

A.27.7.3 All requirements for circuit protection do not apply to coded radio reporting systems. These systems do not use metallic circuits.

Circuit protection limits equipment damage caused when an incident applies transient currents to the circuits of the public emergency alarm reporting system. Lightning is one source of such transient currents.

Article 800 of the *NEC* covers protection of communications circuits, including the installation of surge suppressors and lightning arresters.

27.7.3.1 The protective devices shall be located close to or be combined with the cable terminals.

27.7.3.2 Surge protective devices designed and approved for the purpose shall be installed at a location accessible to qualified persons and shall be marked with the name of the manufacturer and model designation.

27.7.3.3 All surge protective devices shall be connected to a ground in accordance with *NFPA 70*.

27.7.3.4 All fuses, fuseholders, and adapters shall be plainly marked with their ampere rating. All fuses rated over 2 amperes shall be of the enclosed type.

27.7.3.5 Circuit protection required at the communications center shall be provided in every building that houses communications center equipment.

27.7.3.6 Each metallic conductor entering an emergency response facility from partially or entirely aerial lines shall be protected by a surge protective device.

27.7.3.7 All metallic conductors entering the communications center shall be protected by the following devices, in the order named, starting from the exterior circuit:

(1) Fuse rated at 3 amperes minimum to 7 amperes maximum and not less than 2000 volts
(2) Surge protective device(s)
(3) Fuse or circuit breaker rated at ½ ampere

27.7.3.8 In regard to 27.7.3.7, the ½-ampere protection on the tie circuits shall be omitted at subsidiary communications centers.

Δ **27.7.3.9** Open aerial metallic conductors and metallic cable shall comply with 27.7.3.9.1 and 27.7.3.9.2.

N **27.7.3.9.1** At junction points of open aerial metallic conductors and metallic cable, each conductor shall be protected by a surge protective device of the weatherproof type.

N **27.7.3.9.2** A connection shall also be between the surge protective device ground, any metallic sheath, and the messenger wire.

27.7.3.10 Aerial open-wire and nonmessenger-supported, two-conductor cable circuits shall be protected by a surge protective device at intervals not to exceed 2000 ft (610 m).

27.7.3.11 Where used for aerial construction, surge protective device, other than of the air-gap or self-restoring types, shall not be installed in public emergency alarm reporting circuits.

27.7.3.12 All protective devices used for aerial construction shall be accessible for maintenance and inspection.

27.8 Emergency Communications Systems (ECS).

27.8.1* Public emergency alarm reporting systems that are capable of two-way wired or wireless communications with command and control capabilities and/or voice communications capabilities shall be permitted to be used as part of the communications infrastructure of an emergency communications system (ECS), provided that it does not interfere with the public emergency alarm reporting system.

A.27.8.1 The public emergency alarm reporting system infrastructure can be used to facilitate the operation of wide-area signaling, which might include voice, and which some communities now use for emergency notifications to the public.

27.8.2 The method of interfacing and monitoring for integrity between the public emergency alarm reporting system and the ECS shall be in accordance with 27.6.3.2.3 and treated as an auxiliary alarm system connected to a protected premises.

27.8.3 Wired or wireless alarm boxes shall be permitted for shared use with an emergency communications system and shall meet all the requirements of Chapter 27.

27.8.4 Trouble and alarm indications in the emergency communications system shall be visually and audibly annunciated at the communications center, except under fault conditions that prevent such a notification process.

27.8.5 When a fault condition prevents communications between the ECS and the communications center, an audible and visual trouble indication shall be activated at the fire command center in the protected premises.

27.8.6 Communications between the public emergency alarm reporting system and the emergency communications system shall be monitored for integrity, and faults shall be annunciated at the communications center, as well as at the fire command center or the emergency command center or both, in the protected premises.

References Cited in Commentary

ANSI/IEEE C2, *National Electrical Safety Code*, 2017 edition, Institute of Electrical and Electronics Engineers, 3 Park Avenue, 17th Floor, New York, NY 10016-5997.

NFPA 70®, *National Electrical Code®*, 2017 edition, National Fire Protection Association, Quincy, MA.

NFPA 75, *Standard for the Protection of Information Technology Equipment*, 2017 edition, National Fire Protection Association, Quincy, MA.

NFPA 1221, *Standard for the Installation, Maintenance, and Use of Emergency Services Communications Systems*, 2016 edition, National Fire Protection Association, Quincy, MA.

Reserved Chapter

In the 2019 edition of *NFPA 72®*, *National Fire Alarm and Signaling Code®*, Chapter 28 is reserved for future use.

Single- and Multiple-Station Alarms and Household Signaling Systems

CHAPTER

29

Chapter 29 covers the performance, installation, and use of all single- and multiple-station alarms and household alarm systems — in essence, all fire warning and carbon monoxide (CO) equipment. The term *fire warning equipment* is defined in 3.3.115 as "any detector, alarm, device, or material related to single- and multiple-station alarms or household alarm systems." This definition helps to clarify the intent of the requirements in Chapter 29 compared to other chapters in *NFPA 72®*, *National Fire Alarm and Signaling Code®*.

The scope of this chapter was changed in the 2002 edition of the Code, from one limited to fire warning equipment specifically in dwelling units, to one that covers fire warning equipment independent of the occupancy. This scope is reflected in the chapter title and in 29.1.1. Historically, reference to the requirements for smoke alarms in *NFPA 72* from building codes and from NFPA *101®*, *Life Safety Code®*, has not been limited to dwelling unit applications; this "household" chapter has been used as a source for the installation of smoke alarms, regardless of occupancy.

The definition of the term *household fire alarm system* in 3.3.111.2 refers to equipment that uses a fire alarm control unit to process signals and produce alarm (warning) signals to occupants. The difference between a smoke detector and a smoke alarm is important to understand — a *smoke detector* is part of a fire alarm system; a *smoke alarm* includes the detection and warning components all in one unit and does not require a control unit for power and supervision.

The following list is a summary of significant changes to Chapter 29 for the 2019 edition of the Code:

- Chapter 29 now incorporates some of the CO-related requirements that had been in NFPA 720, *Standard for the Installation of Carbon Monoxide (CO) Detection and Warning Equipment,* which has been withdrawn and incorporated into *NFPA 72*. The requirements relate to CO alarms and CO alarm systems. Where the same requirements apply to both smoke and CO alarms, the text has been changed to be all inclusive (i.e., "smoke alarm" is now "alarm").
- Revised 29.7.1 to establish that CO alarms must be within 21 ft (6.4 m) of any door to a sleeping room [29.7.1.1(1)], on every occupiable level of a dwelling unit [29.7.1.1(2)], and in every sleeping and guest room containing a fuel-burning appliance [29.7.1.1(3)].
- Added requirements for power supplies (new subsection 29.9.2) for primary power source nonreplaceable primary batteries that all alarm power requirements must last at least 10 years.
- Modified the subsection on ac primary power source (29.9.4), which requires that a cord-connected installation have a restraining means at the plug-in end to permit no restraint if the alarm has a secondary (standby) power source, and loss of ac primary power source results in an audible trouble signal.
- Added a new requirement for primary power source (rechargeable battery) (29.9.8) that the battery be nonremovable or that a noticeable and visible indication be displayed when the battery is removed from the unit.
- Removed the section on resistance to nuisance sources (29.7.3 in 2016 edition) that smoke alarms and smoke detectors be listed for resistance to common nuisance sources. The requirement for devices to be listed to cooking nuisance sources remains in Chapter 29 (29.11.3.4) for this edition but is revised with an effective date of January 1, 2022.
- Added new language to 29.10.9, Supervising Stations, in 29.10.9.6 that alarm, supervisory, and trouble signals be permitted to be received at a listed central supervising station.

29.1 Application.

NFPA 720 Δ **29.1.1*** The performance, selection, installation, operation, and use of single- and multiple-station alarms and household alarm systems shall comply with the requirements of this chapter.

A.29.1.1 Chapter 29 does not attempt to cover all equipment, methods, and requirements that might be necessary or advantageous for the protection of lives and property from fire.

NFPA 72 is a "minimum code." This chapter provides a number of requirements related to single- and multiple-station alarms and household fire alarm systems that are deemed to be the practical and necessary minimum for average conditions at the present state of the art.

Currently Available Smoke Alarm Technology. The technologies used in currently available smoke alarms include ionization smoke detection and photoelectric detection. These detection types are defined in 3.3.276.2 and 3.3.276.4 and are further explained in A.3.3.276.2 and A.3.3.276.4. Ionization smoke detection is more responsive to invisible particles produced by most flaming fires. Photoelectric smoke detection is more responsive to the visible particles produced by most smoldering fire. Residential smoke alarms and commercial smoke detectors are currently available with either ionization technology or photoelectric technology or a combination of both technologies. The use of both technologies generally offers the advantage of providing a faster response to both flaming and smoldering fires, and is recommended for those who desire a higher level of protection than the minimum requirements of this Code.

Fatal home fires involving smoldering fires and flaming fires occur at night and during the day. It is not possible to reliably predict what type of fire will occur or at what hour of the day it will occur. Therefore, the preference of one technology over the other on the basis of the expectation of a particular type of fire (predominately smoldering or flaming) is not a sound basis for selection. While the current consensus of experts suggests that neither technology offers an advantage when the fire type is not known, there is a consensus that there would be a benefit to having both technologies since the type of fire cannot be predicted.

Based on recent analysis of the full scale fire tests documented by the National Institute of Standards and Technology in Report TN 1455-1-2008, *Performance of Home Smoke Alarms, Analysis of the Response of Several Available Technologies in Residential Fire Settings*, the minimum provisions of the Code using either technology are considered to provide an adequate level of protection for most individuals who are not intimate with the fire and are capable of self rescue. This would include occupants in the room of fire origin for both flaming and smoldering fires who escape through the normal path of egress. Protection beyond the minimum provisions of the Code using both technologies should be considered for situations involving individuals who are not capable of self rescue or who might need additional time for escape. These situations might include families where extra time is needed to awaken or assist others.

While it is true that ionization detection technology is more susceptible to nuisance alarms due to cooking, the use of this technology should not be dismissed, particularly where the additional protection of both technologies is suggested. In addition, there is no substantial evidence that suggests that either technology is more susceptible to nuisance alarms from bathroom steam. Provisions and guidance have been added to 29.11.3.4 to help minimize nuisance alarms from both sources. This is important since smoke alarms that are disabled due to frequent nuisance alarms offer no protection whatsoever. A higher level of protection would be afforded by using both technologies in all locations required by this Code with additional locations in other rooms of the dwelling. In considering this, pending the availability of smoke alarms specifically designed for nuisance alarm immunity, additional locations within 20 ft of a cooking appliance should be minimized, especially for smoke alarms using ionization technology.

While these considerations reflect the consensus of experts based on currently available test data that allows analysis of tenability along with alarm response, full scale fire testing

and nuisance alarm testing of current technologies has continued and analysis of this data will also continue. In addition, new technologies are being considered with the prospect of enhanced detection response along with a higher immunity to nuisance activations. The work of the industry and the NFPA technical committee responsible for smoke alarm provisions will be ongoing.

Except for installations near cooking appliances, the requirements of *Chapter 29* do not specify the type — ionization or photoelectric — of smoke alarm to be used. An ionization smoke alarm is generally more responsive to flaming fires, and a photoelectric smoke alarm is generally more responsive to smoldering fires. Both types of alarms have improved home fire safety.

The requirements in *NFPA 72* for smoke alarms assume average conditions and are considered adequate for most individuals who are not intimate with the fire and who are capable of self-rescue. A full complement of smoke alarms is assumed to be installed in accordance with the requirements of Chapter 29. Additional protection, using both ionization and photoelectric smoke alarms, should be considered for situations in which individuals either are not capable of self-rescue or might need additional time for escape (including families for whom extra time is needed to awaken or assist others). For those not capable of self-rescue and who cannot rely on immediate assistance, additional protection (potentially including the use of automatic sprinklers) should be considered. Refer to A.29.3.3 for additional guidance.

When additional smoke alarms are being installed, the impact of additional nuisance alarms needs to be considered. Refer to 29.11.3.4(4) for restrictions on the installation of smoke alarms relative to cooking appliances.

29.1.2* Alarms shall be installed in all occupancies where required by other governing laws, codes, or standards. NFPA 720

A.29.1.2 An example of the applicable code within the NFPA set of codes and standards is NFPA *101*. Other codes such as local building codes are other examples to be considered.

The requirements of Chapter 29 are intended to apply to installations in the following new and existing locations:

(1) One- and two-family dwelling units
(2) Sleeping rooms of lodging and rooming houses
(3) Individual dwelling units of apartment buildings
(4) Guest rooms, sleeping rooms, and living areas within guest suites of hotels and dormitories
(5) Day-care homes
(6) Residential board and care facilities
(7) Other locations where applicable laws codes or standards specify a requirement for the installation of smoke alarms

Chapter 29 deals specifically with single- and multiple-station alarms and household alarm systems, regardless of the occupancy. Generally, this equipment will be used in residential occupancies as required by applicable laws, codes, or standards. Although the list in A.29.1.2 identifies applications commonly addressed by applicable laws, codes, or standards, these sources may identify other applications for which the requirements of Chapter 29 would be appropriate. The applications and locations addressed in this chapter are not intended to cover requirements for common or tenantless areas, such as apartment building lobbies or hallways. Requirements for those applications and locations are in other chapters (e.g., Chapter 17 for detection, Chapter 18 for notification).

29.1.3 The requirements of Chapters 7, 10, 12, 14, 17, 18, 21, 23, 24, 26, and 27 shall not apply unless otherwise noted.

The requirements of Chapter 1, the references in Chapter 2, and the definitions in Chapter 3 apply throughout the Code, including Chapter 29. All testing and maintenance requirements are in Chapter 14. Chapter 29 specifically requires compliance with Chapter 14; see Section 29.13.

29.1.4* The requirements of this chapter shall not apply to installations in manufactured homes.

A.29.1.4 Installations in manufactured homes are under the jurisdiction of The Department of Housing and Urban Development (HUD). The rules for installation are addressed in the Federal Manufactured Housing Construction Safety Standards (available at http://www.hud.gov/offices/hsg/sfh/mhs/mhshome.cfm).

29.1.5 This chapter shall apply to the life safety of occupants and not to the protection of property.

In the United States, residential occupancies lead all other types of occupancies as the site of fire-related deaths. As indicated in 29.1.5 and Section 29.2, the fire warning equipment addressed by this chapter is intended to provide warning to occupants but is not intended to provide property protection or to extinguish the fire. The occupants are responsible for following their emergency exit plan when the alarm signal sounds. Paragraphs A.29.1.1, A.29.2, A.29.6.1, and A.29.6.2 provide fire warning equipment capabilities, home fire statistics, recommendations for fire safety and life safety, a more detailed explanation of an escape plan, and special provisions for people with disabilities. Additional safety equipment such as residential fire sprinklers can provide additional escape time and can limit damage to the premises.

29.2* Purpose.

Δ **A.29.2** *Fire Danger in the Home.* In 2009, fire was the third leading cause of unintentional injury deaths in the home and the sixth leading cause of unintentional injury deaths overall (*Injury Facts*, 2011, National Safety Council).

Seventy-nine percent of the fire fatalities in 2015 resulted from residential fires — 82.7 percent resulted from fires in one- and two-family dwellings, including manufactured homes; 15.5 percent were caused by apartment fires; and 1.7 percent resulted from fires in other residential occupancies ("Fire Loss in the United States during 2015," Hylton J.G. Haynes, NFPA Fire Analysis and Research Division).

Approximately half (52 percent) of the home (dwellings and apartments) fire fatalities resulted from fires reported between 11:00 p.m. and 7:00 a.m., the common sleeping hours ("Home Structure Fires," Marty Ahrens, NFPA Fire Analysis and Research Division, September 2016).

Almost three-quarters (71 percent) of all reported fire injuries occurred in the home, with more than one-half (73 percent) in one- and two-family dwelling units (including manufactured housing), and more than one-fifth (27 percent) apartments ("Fire Loss in the United States During 2015," Hylton J.G. Haynes, NFPA Fire Analysis and Research Division).

It is estimated that each household will experience five (usually unreported) fires per lifetime and one in four fires serious enough to report to a fire department per lifetime ("A Few Facts at the Household Level," NFPA Fire Analysis Division, July 2009).

Fire Safety in the Home. NFPA 72 is intended to provide reasonable safety for persons in family living units. Reasonable fire safety can be produced through the following three-point program:

(1) Minimizing fire hazards
(2) Providing fire-warning equipment
(3) Having and practicing an escape plan

Minimizing Fire Hazards. This Code cannot protect all persons at all times. For instance, the application of this Code might not provide protection against the following three traditional fatal fire scenarios:

(1) Smoking in bed
(2) Leaving children home alone
(3) Cleaning with flammable liquids such as gasoline

However, Chapter 29 can lead to reasonable safety from fire when the three-point program is observed.

Fire-Warning Equipment. There are two types of fire to which household fire-warning equipment needs to respond. One is a rapidly developing, high-heat fire. The other is a slow, smoldering fire. Either can produce smoke and toxic gases.

Family Escape Plan. There is often very little time between the detection of a fire and the time it becomes deadly. This interval can be as little as 1 or 2 minutes. Thus, this Code requires detection means to give a family some advance warning of the development of conditions that become dangerous to life within a short period of time. Such warning, however, could be wasted unless the family has planned in advance for rapid exit from their residence. Therefore, in addition to the fire-warning equipment, this Code assumes that the residents have developed and practiced an exit plan.

Planning and practicing for fire conditions with a focus on rapid exit from the residence are important. Drills should be held so that all family members know the action to be taken. Each person should plan for the possibility that exit out of a bedroom window could be necessary. An exit out of the residence without the need to open a bedroom door is essential.

Household fires are especially dangerous at night when the occupants are asleep. Fires produce smoke and deadly gases that can overcome occupants while they are asleep. Furthermore, dense smoke reduces visibility. Most fire casualties are victims of smoke and gas inhalation rather than burns. To warn against a fire, Chapter 29 provides smoke detector (alarm) requirements in accordance with 29.8.1, and the associated annex recommends heat or smoke detectors (alarms) in all other major areas.

N **29.2.1** Fire-warning equipment for residential occupancies shall provide a reliable means to notify the occupants of the presence of a threatening fire and the need to escape to a place of safety before such escape might be impeded by untenable conditions in the normal path of egress.

An effective fire warning system depends on the proper installation, use, and maintenance of equipment. The locations and requirements specified in Chapter 29 reflect a level of protection determined by consensus agreement. In many cases, additional protection may be desirable to provide a higher degree of protection. Recommendations for additional equipment and other guidance are in A.29.1.1, A.29.3.3, A.29.8.1, A.29.10.4.2, and A.29.11.3.

N **29.2.2** Carbon monoxide warning equipment for residential occupancies shall provide a reliable means to notify the occupants of the presence of carbon monoxide levels that constitute a potential life safety risk and the need for action as a consequence of those levels. **NFPA 720**

CO is an odorless, colorless, and tasteless gas that poses a health threat to people by diminishing the oxygen-carrying capacity of the blood stream. Hemoglobin, which is the oxygen-carrying component in red blood cells, has a much higher affinity to CO than to oxygen. When a person is exposed to CO, the oxygen is replaced by CO resulting in oxygen depletion throughout the body. The effects on a person increase with exposure with symptoms such as headache and nausea to unconsciousness and death. CO warning equipment is designed to provide an early warning when CO exposure, characterized as carboxyhemoglobin (COHb), is low with minor effects, typically at COHb levels of around 10 percent.

29.3 Basic Requirements.

29.3.1 All devices, combinations of devices, and equipment to be installed in conformity with this chapter shall be approved or listed for the purposes for which they are intended.

The term *approved* means acceptable to the authority having jurisdiction. Further explanation is in A.3.2.1. The term *listed* is defined in 3.2.5 and refers to products or services that have been evaluated by an organization acceptable to the authority having jurisdiction. The listing organization does not approve equipment or services — only the authority having jurisdiction can approve equipment or services. Subsection 29.3.1 requires equipment to be either approved or listed. If equipment is not labeled or listed, the authority having jurisdiction can still approve the equipment if it is shown that the requirements of the Code have been met. Also refer to Section 1.5 for the requirements governing equivalence.

NFPA 720

29.3.2 Fire- and carbon monoxide (CO)–warning equipment shall be installed in accordance with the listing and manufacturer's published instructions.

NFPA 720

Δ **29.3.3*** The installation of smoke, heat, fire, or carbon monoxide (CO) alarms or systems, or combinations of these, shall comply with the requirements of this chapter and shall satisfy the minimum requirements for number and location of alarms or detectors by one of the following arrangements:

(1) The required minimum number and location of detection devices shall be satisfied (independently) through the installation of alarms. The installation of additional alarms shall be permitted. The installation of additional system-based detectors, including partial or complete duplication of the alarms satisfying the required minimum, shall be permitted.
(2) The required minimum number and location of detection devices shall be satisfied (independently) through the installation of system detectors. The installation of additional smoke detectors shall be permitted. The installation of additional alarms, including partial or complete duplication of the detectors satisfying the required minimum, shall be permitted.

A.29.3.3 This Code establishes minimum standards for the use of fire-warning equipment. The use of additional alarms or detectors over and above the minimum standard is encouraged. The use of additional devices can result in a combination of equipment (e.g., a combination of single- and multiple-station alarms or a combination of smoke alarms or smoke detectors that are part of a security/fire system and existing multiple-station alarms). Though a combination is allowed, one type of equipment must independently meet the requirements of the Code. Compliance with the requirements of the Code cannot rely on the combination of the following fire-warning equipment:

(1) Single-station alarms
(2) Multiple-station alarms
(3) Household fire alarm system (includes a security/fire system with smoke alarms or smoke detectors)

It is encouraged that the highest level of protection be used where possible. For example, if multiple-station alarms are added to an occupancy with compliant single-station alarms, the multiple-station alarms should be installed to replace all of the single-station alarms. Similarly, if a monitored household fire alarm system is added to a house that has compliant multiple-station alarms, monitored smoke alarms or smoke detectors should be installed to replace the multiple-station alarms or be installed to provide the same required coverage.

The responsiveness of ionization- and photoelectric-type smoke alarms depends on a number of factors, including the type of fire (smoldering, flaming), the chemistry of materials involved in the fire, and the properties of the resulting smoke. Several fire safety organizations recommend that a consumer utilize both ionization and photoelectric technologies in their home smoke alarm systems to permit the longest potential escape times for nonspecific fire situations. This will not preclude the development of new technology with equivalent performance.

FAQ Does the Code permit the use of both smoke alarms and smoke detectors?

The text of 29.3.3 and A.29.3.3 clarifies the acceptable use of combinations of equipment (i.e., single-station alarms, multiple-station alarms, and system detectors). The minimum siting requirements must be met independently either by smoke alarms or by a household fire alarm system. For example, if multiple-station smoke alarms exist in a dwelling unit and fully satisfy the number, location, and installation requirements of the Code, and the homeowner then has a combination fire and burglar alarm system installed, system smoke detectors can be added to the home in new locations without duplication of the smoke alarm locations. The system detectors would be required to meet the installation requirements of the Code in all other respects.

Although this arrangement is permitted by the Code, the importance of the existing smoke alarms and the maintenance of both the new system and the existing smoke alarms should be stressed to the homeowner. In addition, where off-site monitoring is provided, the homeowner should be made aware that the smoke alarms will not normally transmit the alarm to the monitoring station. Smoke alarm replacement is required every 10 years in accordance with 14.4.5, unless otherwise provided by the manufacturers' published instructions. In this scenario, replacement of existing smoke alarms with new system smoke detectors may be an advantage in the long term.

29.3.4 Supplementary functions, including the extension of an alarm beyond the residential occupancy, shall be permitted and shall not interfere with the performance requirements of this chapter.

The supplementary functions described in 29.3.4 can include connection to a remote supervising station, to a central station, or to another remote monitoring location. See 29.10.9 and Chapter 26 for information regarding supervising station connection requirements. Also refer to Section 29.12 for other optional functions permitted by the Code and to 29.10.7 for requirements for combination systems.

N 29.4 Remote Annunciation.

NFPA 720

Remote annunciation from single- and multiple-station alarms shall be permitted, provided signals at the remote annunciator properly identify the hazard.

The Code permits alarms (both smoke and CO) to be remotely annunciated as long as the signals are distinct to identify the specific hazard.

N 29.5 Notification.

29.5.1* Unless otherwise permitted by 29.5.2, fire-warning equipment to be installed in residential occupancies shall produce the audible emergency evacuation signal described in

ANSI/ASA S3.41, *American National Standard Audible Emergency Evacuation (E2) and Evacuation Signals with Relocation Instructions (ESRI)*, whenever the intended response is to evacuate the building.

A.29.5.1 The use of the distinctive three-pulse temporal pattern fire alarm evacuation signal has been recommended by this Code since 1979. It has since been adopted as both an American National Standard [ANSI/ASA S3.41, *American National Standard Audible Emergency Evacuation (E2) and Evacuation Signals with Relocation Instructions (ESRI)*] and an International Standard (ISO 8201, *Audible Emergency Evacuation Signal*).

Copies of both of these standards are available from

Standards Publication Fulfillment, P.O. Box 1020, Sewickley, PA 15143-9998, Tel. 412-741-1979.

For information about the Acoustical Society of America, or for how and why the three-pulse temporal pattern signal was chosen as the international standard evacuation signal, contact Standards Secretariat, Acoustical Society of America, 35 Pinelawn Road, Suite 114E, Melville, NY 11747, Tel. 531-490-0215, Email: asastds@aip.org.

The standard fire alarm evacuation signal is a three-pulse temporal pattern using any appropriate sound. The pattern consists of the following in this order:

(1) An "on" phase lasting 0.5 second ±10 percent.
(2) An "off" phase lasting 0.5 second ±10 percent for three successive "on" periods.
(3) An "off" phase lasting 1.5 seconds ±10 percent *[see Figure A.29.5.1(a) and Figure A.29.5.1(b)]*. The signal should be repeated for a period appropriate for the purposes of evacuation of the building, but for not less than 180 seconds. A single-stroke bell or chime sounded at "on" intervals lasting 1 second ±10 percent, with a 2-second ±10 percent "off" interval after each third "on" stroke, is permitted *[see Figure A.29.5.1(c)]*.

The minimum repetition time is permitted to be manually interrupted.

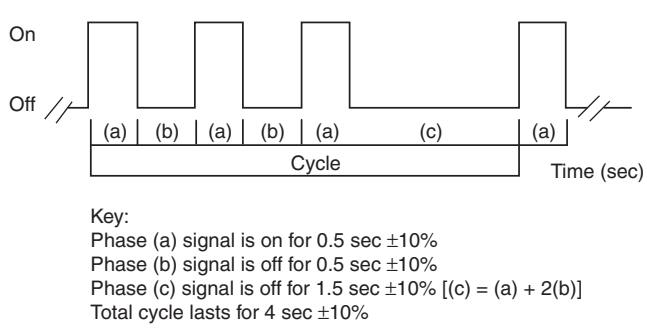

FIGURE A.29.5.1(a) *Temporal Pattern Parameters.*

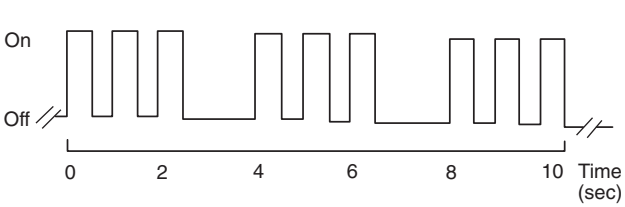

FIGURE A.29.5.1(b) *Temporal Pattern Imposed on Signaling Appliances That Emit Continuous Signal While Energized.*

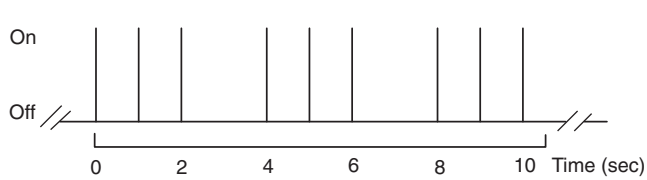

FIGURE A.29.5.1(c) *Temporal Pattern Imposed on Single-Stroke Bell or Chime.*

N **29.5.2** Where mechanically powered single-station heat alarms are used as supplementary devices, unless required by applicable laws, codes, or standards, such devices shall not be required to produce the emergency evacuation signal described in ANSI/ASA S3.41, *American National Standard Audible Emergency Evacuation (E2) and Evacuation Signals with Relocation Instructions (ESRI)*.

Mechanically powered single-station heat alarms used as supplementary devices are not required to produce the emergency evacuation signal described in ANSI/ASA S3.41, *American National Standard Audible Emergency Evacuation (E2) and Evacuation Signals with Relocation Instructions (ESRI)*. This correlates with the allowance in 29.8.2.1.1 for the use of mechanically operated heat alarms.

N **29.5.3***

N **A.29.5.3** The four pulse temporal pattern is illustrated in Figure A.29.5.3.

NFPA 720

N **29.5.3.1** Carbon monoxide alarms shall have a minimum rating of 85 dBA at 10 ft (3 m).

NFPA 720

N **29.5.3.2** Carbon monoxide–warning equipment to be installed in residential occupancies shall produce the T-4 signal. After the initial 4 minutes of alarm, the 5-second "off" time of the alarm signal shall be permitted to be changed to 60 seconds ±10 percent.

The Code requires that a CO alarm signal be distinct from a fire alarm signal. The T-4 signal is the prescribed alarm signal for CO and was previously defined and required in NFPA 720.

29.5.4 The audible emergency evacuation signal shall be permitted to be used for other devices as long as the desired response is immediate evacuation.

Δ **29.5.5*** Fire-warning equipment producing the audible emergency evacuation signal shall be permitted to incorporate voice notification under either or both of the following conditions:

(1) Where the voice message is contained completely within the 1.5-second pause period of the audible emergency evacuation signal

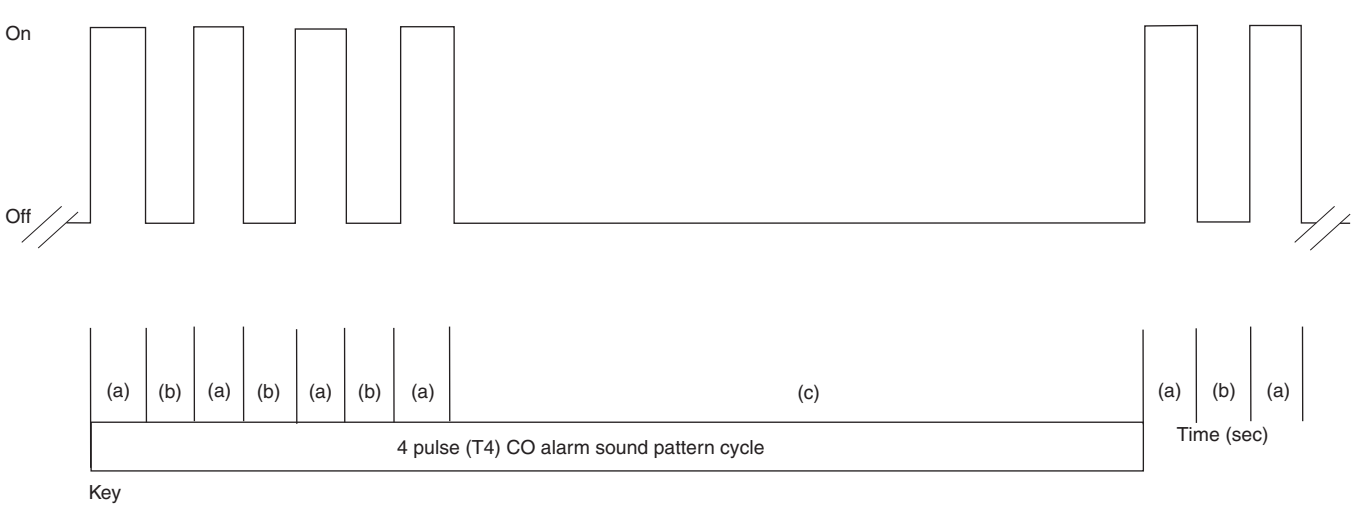

Key

Phase (a) = 100 milliseconds (±10%).
Phase (b) = 100 milliseconds (±10%).
Phase (c) = 5 seconds (±10%), may increase to 60 seconds after 4 minutes.

Δ ***FIGURE A.29.5.3*** *Four Pulse Temporal Pattern.*

(2) Where the voice message complies with 29.5.5(2)(a) and 29.5.5(2)(b) as follows:

(a) The voice message is first preceded by a minimum of eight cycles of the audible emergency evacuation signal.

(b) The voice message periodically interrupts the signal for no longer than 10 seconds, followed by a minimum of two cycles of the audible emergency evacuation signal between each voice message. The initial eight-cycle period shall not be required to be repeated.

A.29.5.5 It is recommended that the voice notification message be intelligible, audible, and appropriate for the hazard. Care should be taken to avoid excessive silence during the message. Figure A.29.5.5(a) through Figure A.29.5.5(c) provide examples of acceptable combinations of the emergency evacuation signal and voice messages.

Alarm initiation — eight T3 cycles minimum.								Two T3 cycles minimum — repeat as desired.		
T3 cycle	T3 cycle	T3 cycle	T3 cycle	T3 cycle	T3 cycle	T3 cycle	T3 cycle	Voice — 10-sec maximum	T3 cycle	T3 cycle
(1)	(2)	(3)	(4)	(5)	(6)	(7)	(8)		(1)	(2)

FIGURE A.29.5.5(a) *Temporal Pattern Parameters with 10-Second Voice Allowance.*

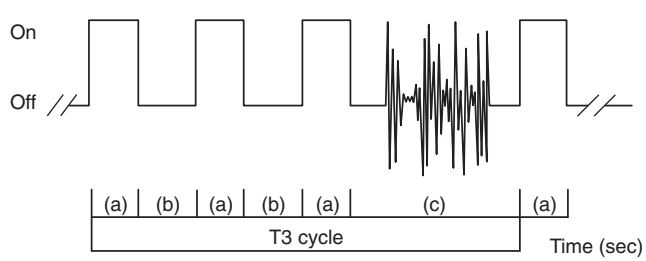

Key:
Phase (a) signal is on for 0.5 sec ±10%
Phase (b) signal is off for 0.5 sec ±10%
Phase (c) signal is off for 1.5 sec ±10% [(c) = (a) + 2(b)]
Phase (c) signal can incorporate voice notification.
Total cycle lasts for 4 sec ±10%

FIGURE A.29.5.5(b) *Temporal Pattern Parameters with 1.5-Second Voice Allowance.*

Alarm initiation — eight T3 cycles minimum. Optional voice allowed in any T3 cycle.								Two T3 cycles minimum — repeat as desired.		
T3 cycle with voice	T3 cycle with voice	T3 cycle with voice	T3 cycle with voice	T3 cycle with voice	T3 cycle with voice	T3 cycle with voice	T3 cycle with voice	Voice — 10-sec maximum	T3 cycle with voice	T3 cycle with voice
(1)	(2)	(3)	(4)	(5)	(6)	(7)	(8)		(1)	(2)

FIGURE A.29.5.5(c) *Temporal Pattern Parameters with 10-Second Voice Allowance.*

The Code permits the limited use of voice notification in conjunction with the audible emergency evacuation signal. The limiting conditions ensure that the majority of the population will be effectively

awakened by the audible emergency evacuation signal before the voice message begins [Bruck, 2001; Bruck, 2005; Duncan, 1999]. The specified conditions permit for both 1.5- and 10-second voice messages in accordance with ANSI/ASA S3.41.

Although the use of voice notification may benefit certain portions of the population, particularly children, the limited studies on the subject are not entirely clear as to what characteristics of the voice signal result in improved waking effectiveness. It is possible that the same effect might be achieved with nonvoice signals, such as multifrequency signals (see the commentary following 29.5.10).

N **29.5.6*** Carbon monoxide–warning equipment producing the audible notification signal shall be permitted to incorporate voice notification under either or both of the following: NFPA 720

(1) Where the voice message is contained completely within the 5-second pause period of the audible notification signal
(2) Where the voice message complies with 29.5.6(2)(a) and 29.5.6(2)(b) as follows:
  (a) The voice message is first preceded by a minimum of 6 cycles of the audible notification signal.
  (b) The voice message periodically interrupts the signal for no longer than 10 seconds, followed by a minimum of two cycles of the audible notification signal between each voice message. The initial 6-cycle period shall not be required to be repeated.

N **A.29.5.6** Temporal pattern parameters with voice allowance are shown in Figure A.29.5.6(a), Figure A.29.5.6(b), and Figure A.29.5.6(c).

Similar to the allowance in 29.5.5 for smoke alarms, the Code allows voice notification within the CO T-4 alarm pattern.

29.5.7 All audible notification signals installed shall meet the performance requirements of 18.4.4, 18.4.6.1, 18.4.6.2, and 29.5.10.

FAQ

What performance requirements for audibility must be met when alarms or notification appliances are installed?

To ensure that alarms or notification appliances can be heard by occupants inside closed sleeping areas, the sound pressure level (SPL) must be measured with bedroom doors closed and in conditions as similar as possible to conditions normally occurring in the home at night. For example, if air conditioning units or humidifiers are used routinely in a home, those appliances should be operating when the measurements are made. Chapter 18 (see 18.4.6.1) requires the warning signal to have a minimum level that satisfies the greatest of the following three conditions:

1. At least 15 decibels (dB) above the average ambient SPL
2. At least 5 dB above the maximum SPL that lasts 1 minute or longer
3. A level of at least 75 dBA

Alarm initiation — Six T4 cycles (30 seconds minimum)						Two T4 cycles minimum — repeat as desired		
T4 cycle	T4 cycle	T4 cycle	T4 cycle	T4 cycle	T4 cycle	Voice — 10-seconds maximum	T4 cycle	T4 cycle
(1)	(2)	(3)	(4)	(5)	(6)		(1)	(2)

FIGURE A.29.5.6(a) *Temporal Pattern Parameters with 10-second Voice Allowance.*

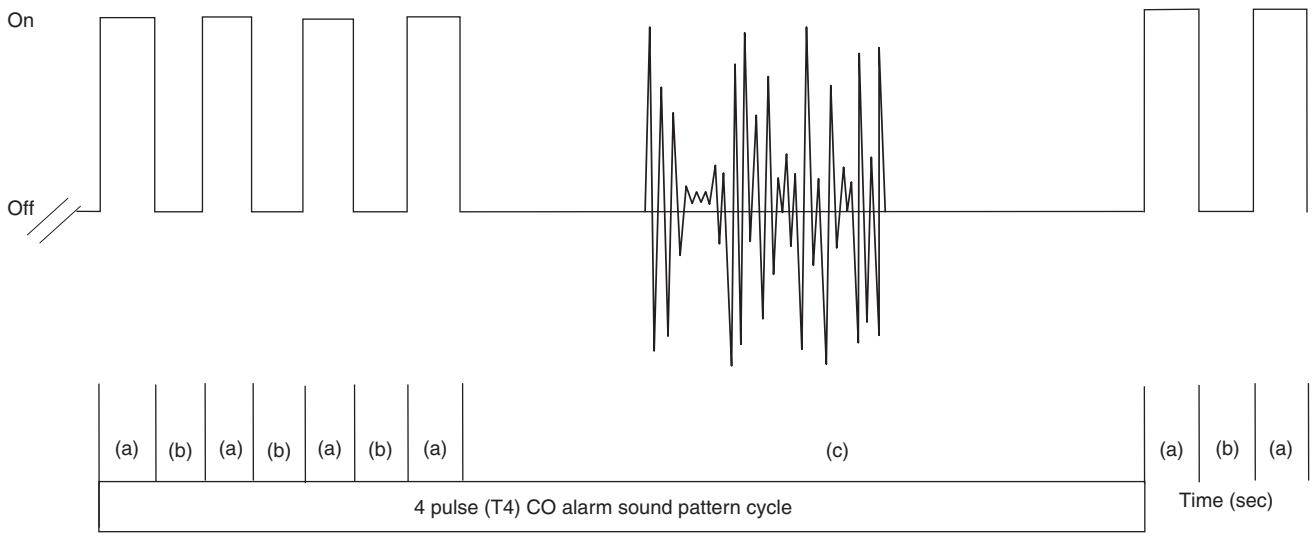

Key

Phase (a) = 100 milliseconds (±10%)
Phase (b) = 100 milliseconds (±10%)
Phase (c) = 5 seconds (±10%)
Phase (c) = cycle can incorporate voice notification
Total cycle lasts 5.8 seconds ±10%

Δ ***FIGURE A.29.5.6(b)*** *Temporal Pattern Parameters with 1.5-second Voice Allowance.*

Alarm initiation — Six T4 cycles minimum. Optional voice allowed in any T4 cycle.						Two T4 cycles minimum — repeat as desired		
T4 cycle with voice	T4 cycle with voice	T4 cycle with voice	T4 cycle with voice	T4 cycle with voice	T4 cycle with voice	Voice — 10-seconds maximum	T4 cycle with voice	T4 cycle with voice

FIGURE A.29.5.6(c) *Temporal Pattern Parameters with 10-second Voice Allowance.*

All measurements must be made in the bedroom at pillow level using the A-weighted scale (dBA) of an SPL meter adjusted to the time-weighted characteristic F (FAST) scale as described in Table 14.4.3.2, Item 22(1). Refer to the definition of the term *average ambient sound level* in 3.3.30.

Listed alarms are tested to meet a minimum SPL of 85 dBA at 10 ft (3.0 m). Many devices will produce levels of 90 dBA or higher. Because not all environmental conditions can be anticipated in standardized testing, on-site testing of installed alarms is recommended, particularly for applications with high ambient noise levels or a room construction that may adversely affect the alarm signal. Because the installation of alarms in various rooms and areas can have an effect on audibility, it is recommended that the audibility requirements of Chapter 18 are reviewed in addition to the requirements in this chapter.

A study published by the Consumer Product Safety Commission (CPSC) examined sound levels from smoke alarms in several residential dwellings (Lee, 2005). The results indicate that smoke alarms inside bedrooms would provide the required sound levels. Smoke alarms located outside bedrooms, however, may not provide the required sound level of 75 dBA in the bedroom at pillow level, particularly if the door is closed. For this reason, the Code requires interconnected alarms throughout the dwelling, including bedrooms. See 29.8.2.1.1, A.29.8.2.1.1, and its associated commentary.

The intended requirements for the use of low frequency alarm signals as required for a Chapter 29 application are provided in 29.5.10, which requires a low frequency alarm signal for specific levels of hearing loss. For other than Chapter 29 applications involving fire alarm system devices (detectors rather than alarms) and where the low frequency tone is generated by and delivered from the fire alarm control unit, refer to the requirements presented in 18.4.6.3.

Δ **29.5.8*** Where visual appliances are provided, they shall meet the requirements of Section 18.5.

A.29.5.8 Low frequency or tactile notification appliances such as bed shakers have been shown to be effective in waking those with normal hearing to profound hearing loss [CSE NIH report, 2005; Bruck and Thomas, 2009; Bruck, Thomas, and Ball, NFPA RF report, 2007].

Subsection 29.5.8 directs users to Section 18.5 for requirements to be followed when visual appliances are used. It also states that those with hearing loss are responsible to inform the appropriate people, such as hotel personnel or landlords, of their hearing deficit so that appropriate notification equipment can be provided. Subsection 29.5.10 provides further details of the required equipment for people with different levels of hearing loss.

N **29.5.9** Since hearing deficits are often not apparent, the responsibility for advising the appropriate person(s) of the existence of this deficit shall be that of the party with hearing loss.

29.5.10 Notification appliances provided in sleeping rooms and guest rooms for those with hearing loss shall comply with 29.5.10.1 and 29.5.10.2, as applicable.

Subsection 29.5.10 addresses the notification requirements in sleeping rooms and guest rooms for people with different levels of hearing loss. Based on the testing to date regarding waking effectiveness of alarm signals, two degrees of hearing loss are denoted as needing different types of alarm signals. Paragraph 29.5.10.1 discusses the requirements for those with mild to severe hearing loss (sometimes described as hard of hearing), and 29.5.10.2 discusses the requirements for those with moderately severe to profound hearing loss (sometimes described as deaf). The term *hearing loss* is defined in 3.3.128 and further explained in A.3.3.128. The terms *mild to severe, moderately severe,* and *profound* refer to the minimum dB level at which a person will perceive sound. The material in A.3.3.128 includes a listing of the dB thresholds corresponding to mild, moderate, moderately severe, severe, and profound hearing loss. As noted in 29.5.9, persons with hearing loss are responsible to inform the appropriate person(s) of the existence and type of their hearing loss.

29.5.10.1* Mild to Severe Hearing Loss. Notification appliances provided for those with mild to severe hearing loss shall comply with the following:

(1) An audible notification appliance producing a low frequency alarm signal shall be installed in the following situations:
   (a) Where required by governing laws, codes, or standards for people with hearing loss
   (b) Where provided voluntarily for those with hearing loss

(2)* The low frequency alarm signal output shall comply with the following:
   (a) The waveform shall have a fundamental frequency of 520 Hz ± 10 percent.
   (b) The minimum sound level at the pillow shall be 75 dBA, or 15 dB above the average ambient sound level, or 5 dB above the maximum sound level having a duration of at least 60 seconds, whichever is greater.

Based on sleep studies to assess the waking effectiveness of different types of alarm signals, a low frequency alarm signal with a fundamental frequency of 520 Hz has been shown to provide improved awakening for people with mild to severe hearing loss when compared to typical alarms from high frequency piezoelectric sounders used in most smoke alarms [Bruck and Thomas, 2008]. Visual alarm signals, such as xenon strobes, have also been shown to not be very effective at waking people with mild to severe hearing loss [Thomas and Bruck, 2008; Ashley and Du Bois, 2004]. As for all alarm signals, effectiveness of the installed notification for the specific occupants should be tested by the occupants, if possible.

The low frequency alarm signal can be provided by the sounder in a smoke alarm or by a separate notification appliance. Exhibit 29.1 shows an example of a notification appliance that uses a low frequency wave to alert those with hearing loss; the appliance is activated by the sound from a traditional smoke alarm. This particular appliance also includes a supplementary bed shaker.

A.29.5.10.1 As an example, governing laws, codes, or standards might require a certain number of accommodations be equipped for those with hearing loss or other disability.

A.29.5.10.1(2) It is not the intent of this section to preclude devices that have been demonstrated through peer-reviewed research to awaken occupants with hearing loss as effectively as those using the frequency and amplitude specified in this section.

29.5.10.2* Moderately Severe to Profound Hearing Loss. Visual notification appliances in accordance with the requirements of 18.5.5.8 and tactile notification appliances in accordance with the requirements of Section 18.10 shall be required for those with moderately severe to profound hearing loss in the following situations:

(1)* Where required by governing laws, codes, or standards for people with hearing loss
(2) Where provided voluntarily for those with hearing loss

The use of visual notification appliances has been shown to be more effective for the deaf population than for those with mild to severe hearing loss. In addition, the low frequency signals specified in 29.5.10.1 are not adequate for those with moderately severe to profound hearing loss. Note that the requirement was clarified in the 2013 edition of the Code to apply to "moderately severe to profound hearing loss" compared to only "profound hearing loss" as specified in the 2010 edition of the Code.

EXHIBIT 29.1

Low Frequency Notification Appliance. (Source: Lifetone Technology, Inc., Oklahoma City, OK)

Therefore, due to the deficiencies with audible signals for this population, 29.5.10.2 requires the use of both visual notification appliances and tactile notification appliances per the requirements of Chapter 18. Tactile appliances can be effective for waking sleeping occupants. However, visual appliances are also needed because people might not always be in contact with the signal from tactile notification appliances. (Refer to A.29.5.10.2 for further insight into the performance of tactile appliances.) For those who are awake, visual notification appliances enhance the ability of the system or equipment to alert them of a fire condition. Section 18.5 addresses requirements for visual signaling. The minimum illumination levels for visual signaling required for rooms in general are based on achieving a level of 0.0375 lumens/ft^2 (0.4037 lumens/m^2). However, Chapter 18 requires a higher intensity for sleeping areas. See Section 18.5 for requirements on visual notification appliances and 18.5.5.8 for requirements specific to sleeping areas.

Early studies of persons who are deaf indicated that a 110 cd visual notification appliance, installed at least 24 in. (610 mm) below the ceiling, generally provides sufficient light intensity to awaken a sleeping deaf person. A 177 candela (cd) appliance is required where mounted within 24 in. (610 mm) of the ceiling because the light signal may be attenuated by the smoke layer during a fire. See Exhibit 29.2 for an example of a smoke alarm with an integral notification appliance.

EXHIBIT 29.2

Smoke Alarm with Integral Notification Appliance for Hearing Impaired. (Source: Gentex Corporation, Zeeland, MI)

A.29.5.10.2 Tactile notification appliances such as bed shakers have been shown to be effective in waking those with normal hearing to profound hearing loss [Ashley et al., 2005, UL 1971, 1991]. Tactile signaling has been studied and found to be an effective way to alert and notify sleeping persons. However, there are many variables that have not been tested that might affect the reliability of their performance. Some of the appliance variables include the mass of the appliance, frequency of vibration, and the throw or displacement of the vibrating mass. Occupant variables that might affect the reporting of test results and the effectiveness of the appliance include the person's age, how long a person has lived with their hearing loss, and what sleep stage the person is experiencing when the appliance operates. The type of mattress might also have an effect of the performance of certain tactile appliances. Mattress variables can include thickness, firmness, memory foam, pillow tops, water beds, air beds, and motion isolation mattresses. Users of tactile appliances should be cautioned to test how well they might sense the effect of the appliance.

The Code requires both visual notification appliances and tactile appliances. Visual notification appliances can awaken sleeping persons, provide verification that there is a fire alarm condition, and serve to alert persons when they are not in contact with a tactile appliance.

A.29.5.10.2(1) As an example, governing laws, codes, or standards might require a certain number of accommodations be equipped for those with hearing loss or other disability.

29.5.11 Signals from notification appliances shall not be required to be synchronized.

29.6 Assumptions.

29.6.1* Occupants.

A.29.6.1 Working smoke alarms cut the risk of dying in reported home structure fires in half. Victims who are intimate with the fire or are incapable of taking action to escape might not benefit from the early warning. For these people, other strategies such as protection in-place or assisted escape or rescue would be necessary.

N **29.6.1.1** The requirements of this chapter shall assume that occupants are capable of self-rescue.

N **29.6.1.2** Occupants intimate with the ignition of a fire shall not be assumed to be protected by the requirements of this chapter.

29.6.2* Escape Route.

A.29.6.2 *Family Escape Plan.* There often is very little time between the detection of a fire and the time it becomes deadly. This interval can be as little as 1 or 2 minutes. Thus, this Code requires detection means to give a family some advance warning of the development of conditions that become dangerous to life within a short period of time. Such warning, however, could be wasted unless the family has planned in advance for rapid exit from their residence. Therefore, in addition to the fire-warning equipment, this Code requires exit plan information to be furnished.

Planning and practicing for fire conditions with a focus on rapid exit from the residence are important. Drills should be held so that all family members know the action to be taken. Each person should plan for the possibility that exit out of a bedroom window could be necessary. An exit out of the residence without the need to open a bedroom door is essential.

Special Provisions for the Disabled. For special circumstances where the life safety of an occupant(s) depends on prompt rescue by others, the fire-warning equipment should include means of prompt automatic notification to those who are to be depended on for rescue.

As noted in A.29.6.1, some occupants will not be able to self-rescue even when they are warned early enough. They may not be able to respond appropriately because they are too old, too young, or physically or mentally impaired. It is important to have a plan for able-bodied occupants to assist those who require help to escape. Such a plan is particularly essential for very young children, who likely will not awaken to a traditional alarm. Sleep studies have shown that the majority of children, particularly those under the age of 10, will not awaken to a traditional alarm signal even at a sound level of 89 dBA at the pillow [Bruck, 1999; Bruck and Bliss, 2000]. This sound level is approximately the peak expected for smoke alarms either in the bedroom or outside the room if the door is open.

A study by the CPSC found that sound levels in bedrooms from a smoke alarm operating in an adjacent hallway ranged from 85 dBA to 96 dBA with the door open [Lee, 2005]. One smoke alarm operating in one of the bedrooms produced sound levels at the pillow of approximately 90 dBA. Besides the very young, others may be at risk due to physical or mental disabilities or from being impaired by medication, alcohol, or drugs. Research programs suggest that low frequency alarm signals, as required in 29.5.10.1, may have some benefit for children as well as individuals impaired by alcohol. However, children will commonly need a responsible, able individual to assist them in escape.

Where additional time is needed to assist others who require help to escape, consideration should be given to the use of both ionization and photoelectric smoke alarms, as well as to the installation of smoke alarms in locations in addition to those required by 29.7.1. Refer to A.29.1.1 and A.29.3.3 for further discussion on the performance of current smoke alarm technology.

29.6.2.1 The requirements of this chapter shall assume that the occupants have an escape plan.

NFPA 720

29.6.2.2 An escape route shall be assumed to be available to occupants and to be unobstructed prior to the fire or carbon monoxide (CO) event.

29.6.2.3* The escape route shall be along the normal path of egress for the occupancy.

A.29.6.2.3 The normal path of egress does not include windows or other means of escape.

NFPA 720

29.6.3* Equipment. The performance of fire- and carbon monoxide (CO)–warning equipment discussed in this chapter shall depend on such equipment being properly selected, installed, operated, tested, and maintained in accordance with the provisions of this Code and with the manufacturer's published instructions provided with the equipment.

A.29.6.3 Assumptions — equipment is as follows:

(1) Maintenance. Good fire protection requires that the equipment be maintained periodically. If the system owner or responsible party is unable to perform the required maintenance, a maintenance agreement should be considered.

(2) Reliability of fire alarm systems. Fire alarm systems located in dwelling units and having all of the following features are considered to have a functional reliability of 95 percent:

(a) Utilizes a control unit
(b) Has at least two independent sources of operating power
(c) Monitors all initiating and notification circuits for integrity
(d) Transmits alarm signals to a constantly attended, remote monitoring location
(e) Is tested regularly by the homeowner and at least every 3 years by a qualified service technician

(3) Reliability of fire alarm systems without remote monitoring or with wireless transmission. Fire alarm systems for dwelling units with all of the preceding features except (d) or systems that use low-power wireless transmission from initiating devices within the dwelling units are considered to have a functional reliability of 90 percent.

(4) Reliability of other systems. Fire alarm systems for dwelling units comprised of interconnected smoke alarms where the interconnecting means is monitored for integrity are considered to have a functional reliability of 88 percent. If the interconnecting means is not supervised or the alarms are not interconnected, such systems are considered to have a functional reliability of 85 percent.

FAQ

What are the periodic testing requirements for household fire alarm systems and smoke alarms?

Periodic testing of equipment is vital to ensure that it is functioning properly. Chapter 14 covers testing and maintenance of all fire warning equipment and requires service personnel to be qualified and experienced in the inspection, testing, and maintenance of fire alarm systems. The Code specifically requires that household fire alarm systems be tested at least annually (see 14.4.6.1). Chapter 14 has new language that states that the occupant of a dwelling unit is considered qualified to perform inspection, testing, and maintenance on a household alarm system that protects that dwelling unit when he or she has information and/or training from the manufacturer or a manufacturer's certified representative (see the commentary following Section 29.13). The Code requires smoke alarms to be inspected and tested in accordance with the manufacturer's published instructions at least monthly. If owners are unable to perform proper testing and maintenance, they should consider entering into an appropriate maintenance contract. All the manufacturer's published instructions need to be retained by the owner for reference during testing and maintenance.

N 29.7* Carbon Monoxide Detection.

NFPA 720

The warning functions intended in this standard shall be performed by single or multiple-station alarms or by detectors connected to a control unit and associated equipment.

The 2019 edition of the Code incorporates the requirements for CO detection that had been in NFPA 720. Many of the requirements are the same or similar for smoke alarms and CO detection, such as Section 29.7, which permits the warning functions for CO to be accomplished through the use of either single- or multiple-station alarms or by system detectors.

N **A.29.7** Hazardous concentrations of carbon monoxide can accumulate in a residence, generally from improperly operating heating appliances, insufficient make-up air into the residence or space, or blocked chimneys or vents. However, there are many other potential sources of carbon monoxide within a home, including, but not limited to, the following:

(1) Malfunctioning fossil fuel–burning appliances
(2) Wood stoves
(3) Fireplaces
(4) Idling automobiles in attached garages
(5) Portable equipment such as gasoline-powered lawn and garden equipment and electric power generators
(6) Barbecues

Carbon monoxide is odorless, tasteless, and colorless; therefore, its presence is undetectable by smell, taste, or sight. Carbon monoxide can be mixed and migrate throughout a residence through the HVAC system. Carbon monoxide alarms meeting the requirements of ANSI/UL 2034, *Standard for Single and Multiple Station Carbon Monoxide Alarms*, carbon monoxide detectors meeting the requirements of ANSI/UL 2075, *Standard for Safety Gas and Vapor Detectors and Sensors*, and installed in accordance with this standard should provide a significant level of protection against fatal carbon monoxide exposure.

The installation of additional carbon monoxide alarms could result in a higher degree of protection. Adding alarms to rooms where fuel-burning appliances are located could provide earlier warning of carbon monoxide hazards caused by those sources. Additional alarms located in rooms normally closed off from the required alarms could increase the escape time, since the carbon monoxide concentration needed to force the carbon monoxide out of the closed rooms to the alarms would not be necessary. As a consequence, the installation of additional carbon monoxide alarms should be considered.

Carbon monoxide alarms or detectors are not substitutes for proper maintenance, inspection, and testing of fuel-burning equipment. Fuel-burning equipment and appliances should be used, maintained, tested, and inspected according to the manufacturers' instructions.

Carbon monoxide detectors/alarms are cross sensitive to hydrogen, an explosive gas that can be given off by recharging lead acid batteries. Where households include recharging stations (e.g., for golf carts), the alarm should be located away from the recharging location.

NFPA 720

N **29.7.1 Required Detection.**

N **29.7.1.1*** Where required by other governing laws, codes, or standards for a specific type of occupancy, listed carbon monoxide alarms or detectors shall be installed as follows:

(1) Outside of each separate dwelling unit sleeping area, within 21 ft (6.4 m) of any door to a sleeping room, with the distance measured along a path of travel
(2) On every occupiable level of a dwelling unit, including basements, excluding attics and crawl spaces
(3) In all sleeping rooms and guest rooms containing installed fuel-burning appliances
(4) Other locations where required by applicable laws, codes, or standards

N **A.29.7.1.1** Where sleeping areas are separated and the audibility of the alarm or detector to occupants within each sleeping area could be seriously impaired, more than one unit could be needed.

At times, depending on conditions, the audibility of notification appliances could be seriously impaired when occupants are in the bedroom area. For instance, there might be a noisy window air conditioner or room humidifier generating an ambient noise level of

55 dBA or higher. The detection device alarms need to penetrate through the closed doors and be heard over the bedroom's noise levels with sufficient intensity to awaken sleeping occupants. Test data indicate that alarms with ratings of 85 dBA at 3 m (10 ft) that are installed outside the bedrooms can produce about 15 dBA over ambient noise levels of 55 dBA in the bedrooms. This sound pressure is likely to be sufficient to awaken the average sleeping person.

Alarms or detectors located remote from the bedroom area might not be loud enough to awaken the average person. In such cases, it is recommended that units be interconnected in such a way that the operation of the remotely located detector or alarm causes an alarm of sufficient intensity to penetrate the bedrooms. The interconnection can be accomplished by the following:

(1) Installation of a system
(2) Wiring together of multiple-station alarms
(3) Use of line carrier or radio frequency transmitters/receivers
(4) Adding supplemental notification appliances

FAQ Where is the requirement to have CO detection established?

The detection requirements in 29.7.1.1 begin with the phrase "where required by other governing laws, codes, or standards for a specific type of occupancy." The statutory requirement to have CO detection in a specified occupancy usually is in the building or occupancy code adopted by the enforcing jurisdiction. The requirements specified by these codes may vary from those specified in 29.7.1. The enforcing jurisdiction should be consulted to determine if any differences exist and to determine the specific requirements for the application. If the specified code requires that CO alarms be installed per *NFPA 72*, the requirements of 29.7.1 apply unless specifically exempted.

N **29.7.1.2*** Each alarm or detector shall be located on the wall, ceiling, or other location as specified in the manufacturer's published instructions that accompany the unit.

N **A.29.7.1.2** The location for effective performance is not generally dependent on mounting height. The density of carbon monoxide is similar to that of air at room temperature, and carbon monoxide generally mixes readily with air.

Except when it is close to a heating source, which can induce thermally buoyant gas plumes that cause CO to rise, CO is generally well mixed in a space and driven by natural convective flows and normal heating and air conditioning airflows in a building. Therefore, in most locations, it is acceptable to have CO alarms mounted either low in a room (i.e., at a typical outlet height) or high in the space at the ceiling.

N **29.7.2 Carbon Monoxide Alarm Interconnection.** Unless exempted by applicable laws, codes, or standards, carbon monoxide alarms used to provide a warning function, and where two or more alarms are installed within a dwelling unit, suite of rooms, or similar area, shall be arranged so that the operation of any carbon monoxide alarm causes all carbon monoxide alarms within these locations to sound. NFPA 720

Similar to the requirement for the interconnection of smoke and heat alarms (see 29.8.2.1.1), the interconnection of CO alarms promotes the earliest warning of a CO exposure threat, particularly when the threat manifests at a remote location in a dwelling.

29.8 Detection and Notification.

The use of fire alarm system smoke detectors and notification appliances shall be permitted to meet the fire-warning requirements for smoke alarms specified in 29.8.1.

Siting requirements of Section 29.8 are generally specified in terms of smoke alarms. However, the Code permits the use of a complete household fire alarm system that contains system-type smoke detectors connected to a listed fire alarm system control unit along with other devices, such as heat detectors and alarm notification appliances. Refer to the introductory commentary for this chapter regarding the difference between smoke alarms and smoke detectors.

Whether smoke alarms or a household fire alarm system is used, the installation must comply with the requirements of 29.3.3. Accordingly, the minimum siting requirements (number and location) must be independently satisfied either by the use of smoke alarms or by the use of fire alarm system–connected smoke detectors. Mixing smoke alarms and smoke detectors to satisfy the minimum siting requirements is not permitted. Thus, a fire alarm system could be used in place of the single- and multiple-station smoke alarms specified throughout Section 29.8. Or, if single-station or multiple-station alarms are intended to independently satisfy the minimum siting requirements in Section 29.8, then a household fire alarm/security system could be used to provide additional detectors and a higher level of protection. See also the related commentary following A.29.3.3.

In addition, a listed commercial (not household) fire alarm system installed in accordance with the requirements of Chapter 29 would be an acceptable alternative to a system of single- and multiple-station alarms or a household fire alarm system as described in this chapter. See 29.10.6.8.

29.8.1* Required Smoke Detection.

A.29.8.1 All hostile fires in dwelling units generate smoke and heat. However, the results of full-scale experiments conducted over the last several decades in the United States, using typical fires in dwelling units, indicate that detectable quantities of smoke precede detectable levels of heat in nearly all cases (NBS GCR 75-51, *Detector Sensitivity and Siting Requirements for Dwellings*, 1975; NBS GCR 77-82, *Detector Sensitivity and Siting Requirements for Dwellings Phase 2*, 1977; and NIST Technical Note 1455-1, *Performance of Home Smoke Detectors Analysis of the Response of Several Available Technologies in a Residential Setting,* 2007). In addition, slowly developing, smoldering fires can produce smoke and toxic gases without a significant increase in the room's temperature. Again, the results of experiments indicate that detectable quantities of smoke precede the development of hazardous thermal atmospheres in nearly all cases.

For the preceding reasons, the required protection in this Code utilizes smoke alarms as the primary life safety equipment for providing a reasonable level of protection against fire.

The installation of additional alarms of either the smoke or heat type should result in a higher degree of protection. Adding alarms to rooms that are normally closed off from the required alarms increases the escape time because the fire does not need to build to the higher level necessary to force smoke out of the closed room to the required alarms. As a consequence, it is recommended that the householder consider the installation of additional fire protection devices. However, it should be understood that Chapter 29 does not require additional smoke alarms over and above those called for in 29.8.1. Refer to Figure A.29.8.1(a) through Figure A.29.8.1(d) where required smoke alarms are shown.

Where to Locate the Required Smoke Alarms. Fifty-three percent of home fire deaths were reported between 11:00 p.m. and 7:00 a.m. Persons in sleeping areas can be threatened by fires in the remainder of the unit; therefore, smoke alarms are best located in each bedroom and between the bedroom areas and the rest of the unit as shown in Figure A.29.8.1(b). In dwelling units with more than one bedroom area or with bedrooms on more than one floor, more than one smoke alarm is required, as shown in Figure A.29.8.1(c).

In addition to smoke alarms outside of the sleeping areas and in each bedroom, Chapter 29 requires the installation of a smoke alarm on each additional level of the dwelling unit, including the basement. These installations are shown in Figure A.29.8.1(d). The living area smoke alarm should be installed in the living room or near the stairway to the upper level, or in both locations. The basement smoke alarm should be installed in close proximity to the stairway leading to the floor above. Where installed on an open-joisted ceiling, the smoke alarm should be placed on the bottom of the joists. The smoke alarm should be positioned relative to the stairway so as to intercept smoke coming from a fire in the basement before the smoke enters the stairway.

Are More Smoke Alarms Desirable? The required number of smoke alarms might not provide reliable early warning protection for those areas separated by a door from the areas protected by the required smoke alarms. For this reason, the use of additional smoke alarms for those areas for increased protection is recommended. The additional areas include dining room, furnace room, utility room, and hallways not protected by the required smoke alarms. The installation of smoke alarms in kitchens, attics (finished or unfinished), or garages is not normally recommended, because these locations occasionally experience conditions that can result in improper operation.

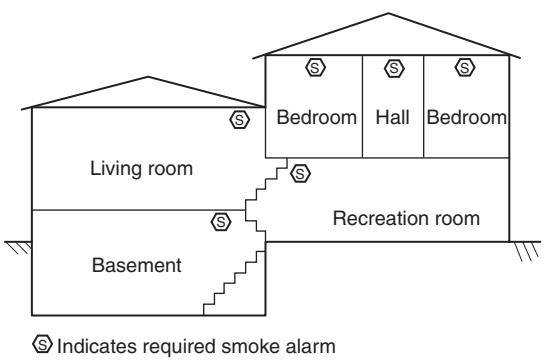

FIGURE A.29.8.1(a) *Split Level Arrangement.*

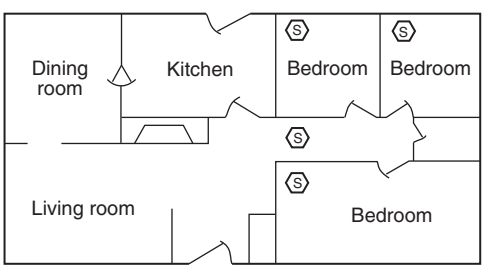

FIGURE A.29.8.1(b) *Smoke Alarm Should Be Located Between Sleeping Area and Rest of Dwelling Unit, as Well as in Each Bedroom.*

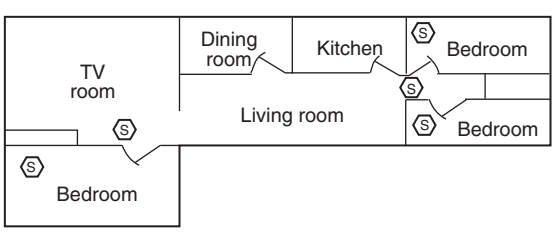

FIGURE A.29.8.1(c) *In Dwelling Units with More Than One Sleeping Area, Smoke Alarm Should Be Provided to Protect Each Sleeping Area in Addition to Smoke Alarms Required in Bedrooms.*

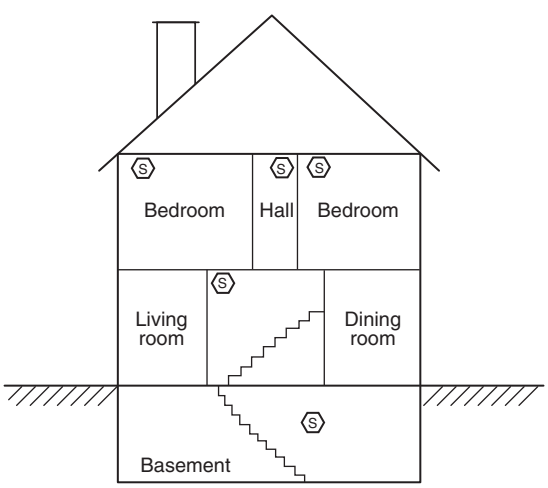

FIGURE A.29.8.1(d) *Smoke Alarm Should Be Located on Each Level in Addition to Each Bedroom.*

29.8.1.1* Where required by other governing laws, codes, or standards for a specific type of occupancy, listed single- and multiple-station smoke alarms shall be installed as follows:

(1)* In all sleeping rooms and guest rooms
(2)* Outside of each separate dwelling unit sleeping area, within 21 ft (6.4 m) of any door to a sleeping room, with the distance measured along a path of travel
(3) On every level of a dwelling unit, including basements
(4) On every level of a residential board and care occupancy (small facility), including basements and excluding crawl spaces and unfinished attics
(5)* In the living area(s) of a guest suite
(6) In the living area(s) of a residential board and care occupancy (small facility)

A.29.8.1.1 Occupancies where smoke alarms are typically required include residential, residential board and care, or day-care home. The term *residential occupancy* is defined in 3.3.249 and includes one- and two-family dwellings; lodging or rooming houses; hotels, motels, and dormitories; and apartment buildings. The term *residential board and care occupancy* is defined in 3.3.248 and includes both small and large facilities. NFPA *101* specifies a small facility to be one with sleeping accommodations for not more than 16 residents. The term *day-care home*, defined in 3.3.64, is a specific category of day-care occupancy. It should be noted that applicable laws, codes, or standards might include conditions that could impact the applicability of these requirements. The local authority should be consulted for specific details.

A.29.8.1.1(1) The term *sleeping room* applies to several occupancies including: one- and two-family dwellings; lodging or rooming houses; hotels, motels, and dormitories; apartment buildings; residential board and care facilities; and day-care homes. The term *guest room*, defined in 3.3.126, is an accommodation that includes sleeping facilities. It applies in the context of hotel and dormitory occupancies.

A.29.8.1.1(2) The term *dwelling unit* is defined in 3.3.83 and applies to one- and two-family dwellings and dwelling units of apartment buildings (including condominiums).

A.29.8.1.1(5) The term *guest suite* is defined in 3.3.127, and the term *living area* is defined in 3.3.152.

FAQ Where is the requirement to have smoke detection established?

The detection requirements in 29.8.1.1 begin with the phrase "where required by other governing laws, codes, or standards for a specific type of occupancy." The statutory requirement to have smoke detection in a specified occupancy usually is in the building or occupancy code adopted by the enforcing jurisdiction. The requirements specified by these codes may vary from those specified in 29.8.1. The enforcing jurisdiction should be consulted to determine if any differences exist and to determine the specific requirements for the application. If the specified code requires that smoke alarms be installed per *NFPA 72*, the requirements of 29.8.1 apply unless specifically exempted.

Δ **29.8.1.2** Where the area addressed in 29.8.1.1(2) is separated from the adjacent living areas by a door, a smoke alarm shall be installed in the area between the door and the sleeping rooms, and additional alarms shall be installed on the living area side of the door as specified by 29.8.1.1 and 29.8.1.3.

This requirement addresses circumstances in which a door separates the area outside the sleeping rooms from the rest of the living area, as may occur if there is a door to a hallway leading to the bedrooms. In such a case, a smoke alarm must be on both sides of the door, consistent with the other siting

requirements, so that people in rooms on both sides of the door will be warned in a timely manner of a fire developing on the opposite side.

29.8.1.3 In addition to the requirements of 29.8.1.1(1) through 29.8.1.1(3), where the interior floor area for a given level of a dwelling unit, excluding garage areas, is greater than 1000 ft^2 (93 m^2), smoke alarms shall be installed per 29.8.1.3.1 and 29.8.1.3.2.

Δ **29.8.1.3.1*** All points on the ceiling shall have a smoke alarm within a distance of 30 ft (9.1 m) travel distance or shall have an equivalent of one smoke alarm per 500 ft^2 (46 m^2) of floor area.

A.29.8.1.3.1 One smoke alarm per 500 ft^2 (46 m^2) is evaluated by dividing the total interior square footage of floor area per level by 500 ft^2 (46 m^2). The requirements do not preclude the installation of smoke alarms on walls in accordance with 29.11.3.3. Some building configurations, such as division of rooms and open foyers or great rooms, dictate that alarms be located so that they do not cover distinctly separate 500 ft^2 (46 m^2) areas but rather provide overlapping coverage relative to this spacing requirement.

29.8.1.3.2 Where dwelling units include great rooms or vaulted/cathedral ceilings extending over multiple floors, smoke alarms located on the upper floor that are intended to protect the aforementioned area shall be permitted to be considered as part of the lower floor(s) protection scheme used to meet the requirements of 29.8.1.3.1.

The need for additional smoke alarms in larger dwellings is addressed in 29.8.1.3. The average home size in the United States has increased considerably over the past 40 years. For example, the average floor area of a new one-family house was 1695 ft^2 (158 m^2) in 1974, and 2598 ft^2 (241 m^2) in 2013. Homes of 3000 ft^2 (279 m^2) are not uncommon in many areas of the country. For large dwellings, the requirements lead to the use of additional smoke alarms in accordance with 29.8.1.3.

On any level of a dwelling with an interior floor area that exceeds 1000 ft^2 (93 m^2), excluding garage areas, spacing requirements dictate the placement of smoke alarms to meet one of the two following criteria:

1. All points on the ceiling (or vertical wall locations) have a smoke alarm within a distance of 30 ft (9.1 m) in travel distance.
2. There is at least one smoke alarm for every 500 ft^2 (46 m^2) of floor area.

Exhibit 29.3 shows an example of the first criterion. For an example of the second criterion, if the floor area shown in Exhibit 29.4 is 1400 ft^2 (130 m^2), then three smoke alarms would be required [1400 ft^2 (130 m^2) ÷ 500 ft^2 (46 m^2) = 2.8, which rounded up is 3]. Two alarms would not be sufficient, since 2 × 500 ft^2 (46 m^2) is less than the 1400 ft^2 (130 m^2) floor area.

Exhibit 29.4 shows possible locations for meeting the 500 ft^2 (46 m^2) requirement. Although the Code permits coverage areas for the smoke alarms to overlap, strategic placement of smoke alarms in separate areas and rooms on the floor should be considered to maximize the early warning potential of the smoke alarms to detect fire anywhere on that level of the dwelling.

As shown in Exhibit 29.5, 29.8.1.3.2 specifically permits a smoke alarm to satisfy the required number of smoke alarms for more than one floor if that smoke alarm is located to protect the ceiling area over a multifloor space, such as a two-floor great room. For example, assume the house shown in Exhibit 29.5 has a 1852 ft^2 (172 m^2) first floor and a 1300 ft^2 (121 m^2) second floor. Based on the criterion of one or more smoke alarms for every 500 ft^2 (46 m^2), four smoke alarms would be required on the first floor and three would be required on the second floor. However, for the second floor, the requirements in 29.8.1.1 require a smoke alarm in every bedroom and one outside each sleeping area within 21 ft (6.4 m) of any bedroom door. These requirements result in six smoke alarms being required on the second floor, as shown in Exhibit 29.5. Per 29.8.1.3.2, the second floor smoke alarm that is positioned over

the open walkway to the master bedroom also satisfies one of the four smoke alarms required on the first floor because the vaulted ceiling of the family room is open to the second floor.

29.8.2 Required Occupant Notification.

29.8.2.1 Fire-warning equipment used to provide required or optional detection shall produce audible fire alarm signals that comply with 29.8.2.1.1 or 29.8.2.1.2.

EXHIBIT 29.3

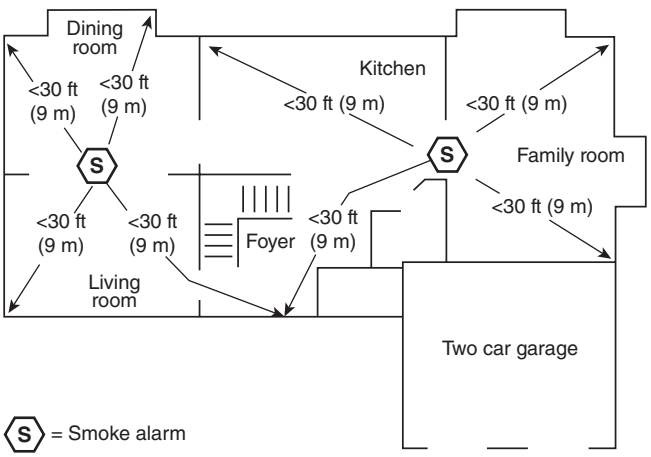

Example of 30 ft (9 m) Spacing Criterion for Dwellings with Interior Floor Areas Greater Than 1000 ft² (93 m²). (Source: JENSEN HUGHES, Baltimore, MD)

EXHIBIT 29.4

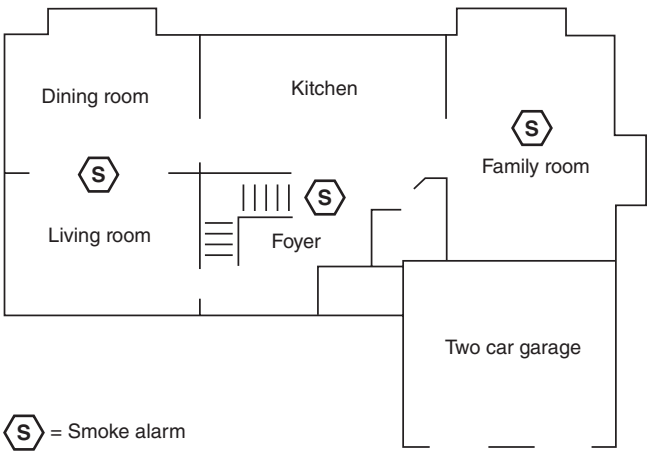

Example of Spacing Criterion of One or More Smoke Alarms for Every 500 ft² (46 m²) of Interior Floor Area on Every Floor Greater Than 1000 ft² (93 m²). (Source: JENSEN HUGHES, Baltimore, MD)

EXHIBIT 29.5

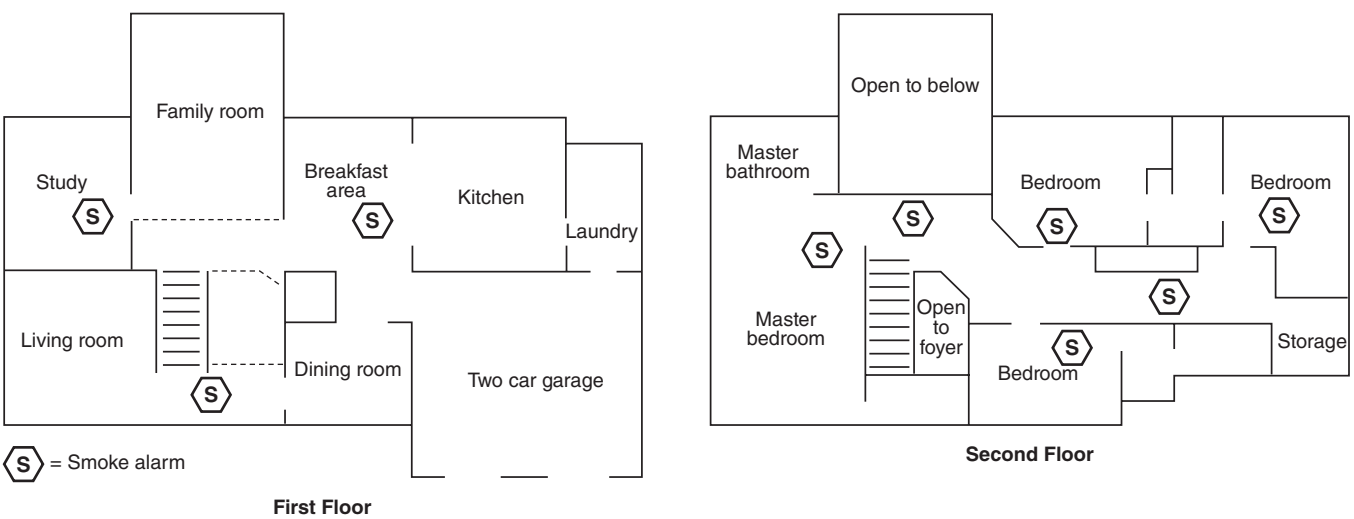

Example of Smoke Alarm Requirements for a Large House with Multifloor Spaces as Addressed in 29.8.1.3.2. (Source: JENSEN HUGHES, Baltimore, MD)

29.8.2.1.1* Interconnected Smoke and Heat Alarms. For other than mechanically powered single-station heat alarms and unless exempted by applicable laws, codes, or standards, smoke or heat alarms used to provide a fire-warning function, and where two or more alarms are installed within a dwelling unit, suite of rooms, or similar area, shall be arranged so that the operation of any smoke or heat alarm causes all alarms within these locations to sound.

A.29.8.2.1.1 As of the 2007 edition of *NFPA 72*, the Code required the interconnection of alarms for both new and existing construction. The introduction of wireless interconnect smoke alarms allows installation of interconnect devices in existing construction without the need for ac wiring modifications that once were required to retrofit interconnected alarms. Work by the U.S. Consumer Product Safety Commission (CPSC) has concluded that interconnection of alarms is an important factor that can affect proper notification and life safety [1, 2]. The CPSC study shows that interconnected smoke alarms alerted residents to the fire more than twice as often as noninterconnected alarms. A Victoria University study [3] also emphasizes the need for interconnected alarms. The study indicates that interconnected smoke alarms in every room in every dwelling would lead to about 50 percent fewer fatalities. A study by Underwriters Laboratories shows the benefit of interconnection [4].

(1) Green, M. A., and Andres, C. "2004-2005 National Sample Survey of Unreported Residential Fires." CPSC, 2009.
(2) Ahrens, M. "Factors in Smoke Alarm Performance." National Fire Protection Association. December 2009.
(3) Thomas, I., and Bruck, D. "Smoke Alarms in Dwellings: Timely Activation and Effective Notification." Victoria University. June 2010.

The use of the hard-wired "interconnect" feature with multiple-station alarms satisfies the requirements of 29.8.2.1.1. See Exhibit 29.6 for a typical arrangement of interconnected multiple-station smoke alarms. Additional notification appliances connected to and powered through the dry contacts of a single- or multiple-station smoke alarm relay can be used to provide an audible signal to meet the requirements in 29.5.7.

Smoke alarms and notification appliances should not be interconnected between separate dwelling units, such as duplex arrangements or apartments. Exhibit 29.7, Exhibit 29.8, and Exhibit 29.9 show equipment that could be used for remote notification.

FAQ

What important changes have been made in the Code regarding requirements for interconnection of smoke alarms?

Before the 2007 edition of the Code, the requirements for the interconnection of smoke alarms were restricted to new construction. The 2007 Code included a number of changes to promote the use of additional interconnected smoke alarms throughout dwellings and to address newer technology. The interconnection of all smoke alarms in the dwelling also ensures that an alarm signal meeting the Code will be provided in bedrooms regardless of the location of the first sounding smoke alarm, which may be two floors away from the sleeping area.

These requirements are partly enabled by several wireless technologies that permit battery-operated smoke alarms to be interconnected (see Exhibits 29.10 and 29.11); ac wiring renovation is not required to provide interconnection in existing construction. In addition, requirements were introduced in the 2010 edition of the Code for wireless interconnected alarms to meet specific performance requirements to ensure adequate transmission and reception capability within a structure. See 29.10.8.2.

The anticipation is that model building and life safety codes as well as local ordinances will eventually mandate that existing construction structures meet the interconnection requirements when a property is sold or when significant renovations are made.

EXHIBIT 29.6

Hard-Wired Multiple-Station (Interconnected) Smoke Alarms. (Source: JENSEN HUGHES, Baltimore, MD)

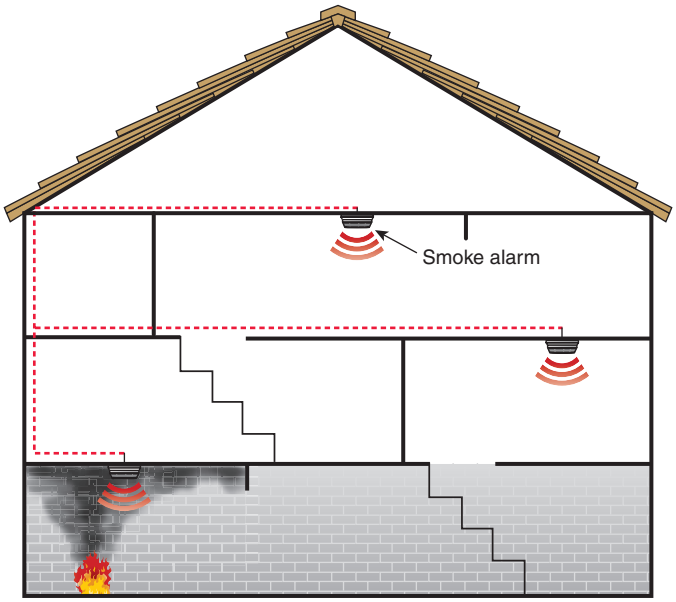

EXHIBIT 29.7

Single-Station Smoke Alarm with Remote Notification Appliance. (Source: JENSEN HUGHES, Warwick, RI)

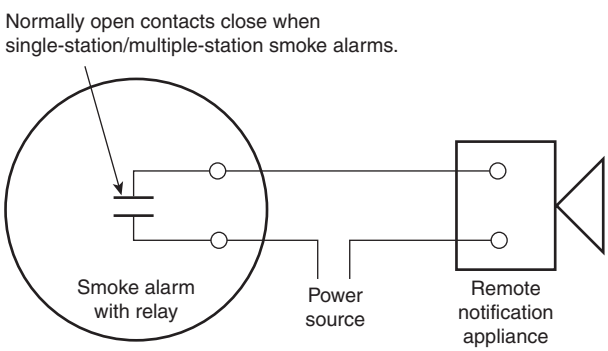

EXHIBIT 29.8

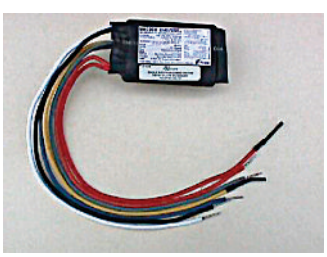

Smoke Alarm Auxiliary Relay Module for Remote Notification Appliance. (Source: Kidde Fire Safety, Mebane, NC)

EXHIBIT 29.9

Notification Appliances. Left: Audible/Visual Appliance; Right: Mini-Horn. (Source: Edwards, Mebane, NC; Gentex Corporation, Zeeland, MI)

29.8.2.1.2 Household Fire Alarm System. Where a household fire alarm system is used to provide a fire-warning function, notification appliances shall be installed to meet the performance requirements of 29.5.7.

The intended requirements for the use of low frequency alarm signals as required for a Chapter 29 application are in 29.5.10, which requires a low frequency alarm signal for specific levels of hearing loss. For other than Chapter 29 applications involving fire alarm system devices (detectors rather than alarms) and where the low frequency tone is generated by and delivered from the fire alarm control unit, refer to the requirements presented in 18.4.6.3.

Δ **29.8.2.2*** Unless otherwise permitted by the authority having jurisdiction, audible fire alarm signals shall sound only in an individual dwelling unit, suite of rooms, or similar area and shall not be arranged to operate fire-warning equipment or fire alarm systems outside these locations.

A.29.8.2.2 One of the common problems associated with smoke alarms and detectors is the nuisance alarms that are usually triggered by products of combustion from cooking, smoking, or other household particulates. While an alarm for such a condition is anticipated and tolerated by the occupant of a dwelling unit through routine living experience, the alarm is not permitted where it also sounds alarms in other dwelling units or in common use spaces. Nuisance alarms caused by cooking are a very common occurrence, and inspection authorities should be aware of the possible ramifications where the coverage is extended beyond the limits of the dwelling unit.

N **29.8.2.3** Remote annunciation shall be permitted.

EXHIBIT 29.10

Wireless Smoke Alarm. (Source: Kidde Fire Safety, Mebane, NC)

29.9 Power Supplies.

Δ **29.9.1 Smoke and Heat and Carbon Monoxide Alarms.** Smoke and heat and carbon monoxide alarms shall meet the requirements of 29.8.2.1.1 and be powered by one of the following means:

NFPA 720

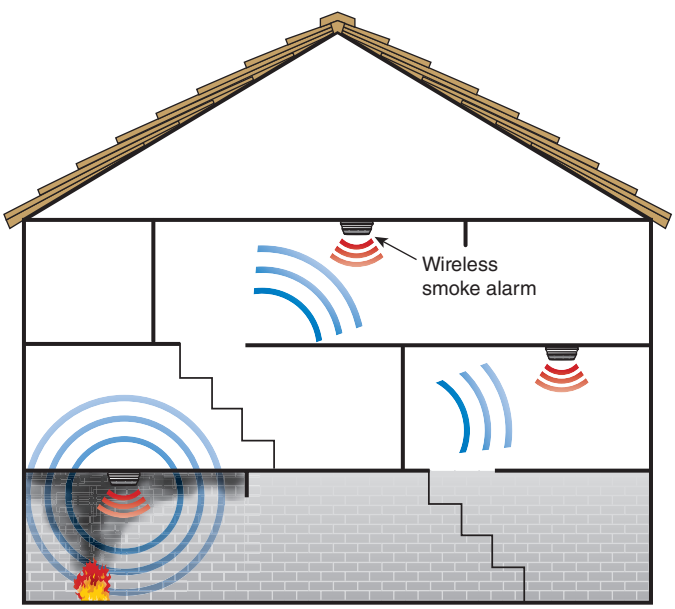

EXHIBIT 29.11

Wirelessly Interconnected Multiple-Station Smoke Alarms. (Source: JENSEN HUGHES, Baltimore, MD)

The requirement to meet 29.8.2.1.1 was added to the 2016 edition of the Code to reinforce that smoke and heat alarms must be interconnected, while also meeting the various power requirement alternatives.

(1) A commercial light and power source along with a secondary power source that is capable of operating the device for at least 7 days in the normal condition, followed by 4 minutes of alarm. Carbon monoxide alarms shall have sufficient capacity to operate the alarm signal(s) for at least 12 continuous hours.

The requirement in 29.9.1(1) for an ac-powered alarm with backup power supply (see Exhibit 29.12) addresses the need to have a functioning smoke alarm during a power outage. Batteries, however, are the principal backup source in current smoke and heat alarms.

It is crucial that smoke alarms be tested periodically and their batteries replaced annually, or after a prolonged power outage, to ensure that this secondary power source to the smoke alarm will function. During a power outage, occupants often use candles, lanterns, space heaters, and other equipment not usually in operation in the home environment, which significantly increases the risk of fire. For that reason, smoke alarms play an even more important role in warning residents of a fire during a power outage.

In the 2013 edition of the Code, the operating requirement for smoke and heat alarm secondary power sources was changed from 24 hours to 7 days. The product testing standards, ANSI/UL 217, *Standard for Single and Multiple Station Smoke Alarms,* and ANSI/UL 539, *Standard for Single and Multiple Station Heat Alarms*, have required secondary power sources for 7 days in the standby condition and then for 4 minutes of alarm. The change in Chapter 29 was made to harmonize the requirements of *NFPA 72*, ANSI/UL 217, and ANSI/UL 539.

The requirement for a CO alarm to sound 12 hours compared to 4 minutes for a smoke or heat alarm is based on the fact that a fire hazard is typically a short event compared to a CO exposure. The rationale is that if a CO event happens when occupants are away for the day, such as at work, the CO alarm needs to continue to provide a warning for hours and be on when they get home. Since CO, unlike fire conditions, is not readily apparent to occupants, it is necessary that an alarm lasts sufficiently long to provide notification while also balancing the necessary battery requirements for the extended alarm time.

EXHIBIT 29.12

AC-Powered Ionization Smoke Alarm with Battery Backup. (Source: Kidde Fire Safety, Mebane, NC)

(2) If a commercial light and power source is not normally available, a dependable, noncommercial ac power source along with a secondary power source that is capable of operating the device for at least 7 days in the normal condition, followed by 4 minutes of alarm for smoke and heat alarms or 12 hours of alarm for carbon monoxide alarms.

The power source options listed in 29.9.1(1) and 29.9.1(2) both require an ac power source in combination with a secondary power source. Note that some building and life safety codes permit the exclusion of the secondary power source in specific occupancies, and for some occupancies they require that smoke alarms be supplied by a commercial power source. Where the exclusion of secondary power is permitted, consideration must be given to the requirement in 29.9.4(5) regarding smoke alarms powered by an arc-fault circuit interrupter (AFCI) — or ground-fault circuit interrupter (GFCI) — protected circuits and the requirement for secondary power.

(3) A nonrechargeable, nonreplaceable primary battery that meets the requirements of 29.9.2.

FAQ

Do the interconnection requirements of 29.7.2 and 29.8.2.1.1 apply to smoke and CO alarms that use a primary 10-year battery?

Alarms powered by a primary 10-year battery identified in 29.9.1(3) must also be of the multiple-station type so that they can meet the interconnection requirements of 29.7.2 and 29.8.2.1.1 unless otherwise exempted. The 4 minutes of alarm requirement applies to battery-powered smoke alarms and to smoke alarms powered by 120 VAC or a control unit power supply. Four minutes is considered sufficient time to warn occupants that a fire condition exists. Note that some building and life safety codes require primary power to be supplied by a commercial power source. The 12 hours of alarm for CO alarms also apply to the primary 10-year battery devices (see the commentary following 29.9.1 regarding the 12-hour requirement).

(4) If a battery primary power supply is specifically permitted, a battery meeting the requirements of 29.9.7 or the requirements of 29.9.2.

Some building and life safety codes specifically permit the use of alarms with batteries as the primary power source in specific occupancies. For example, NFPA *101* permits the use of battery-only smoke alarms in existing one- and two-family dwelling units. The use of existing battery-only smoke alarms in occupancies such as an existing day-care home or an existing residential board and care large facility is conditional on the authority having jurisdiction ensuring that proper testing, maintenance, and battery replacement programs are in place. Although battery primary power is permitted in some cases, alarms are recommended to be powered by ac with battery backup, where practical.

In many instances, battery-operated alarms are rendered inoperable because the batteries have been removed or dead batteries have not been replaced. The use of rechargeable batteries that meet the requirements of 29.9.8 is intended to result in fewer instances of nonpowered smoke alarms. New battery technologies allow for a 10-year life, which is longer than the 1-year minimum required in 29.9.8(1).

(5) A suitable spring-wound mechanism for the nonelectrical portion of a listed single-station alarm with a visible indication to show that sufficient operating power is not available.

N **29.9.2 Primary Power Source Nonreplaceable Primary Battery.** If smoke, heat, or carbon monoxide alarms are powered by a nonrechargeable, nonreplaceable primary battery, the battery shall be monitored to ensure the following conditions are met: NFPA 720

(1) All smoke alarm power requirements are met for at least 10 years of battery life, including required periodic testing.
(2) All carbon monoxide alarm power requirements are met for the service life of the sensor life specified by the manufacturer's published instructions, not to exceed 10 years.
(3) A distinctive audible trouble signal occurs before the battery is incapable of operating the device(s) for alarm purposes.
(4) At the battery voltage at which a trouble signal is obtained, the unit is capable of producing a fire alarm signal for at least 4 minutes, or a carbon monoxide alarm signal for at least 12 continuous hours in accordance with 29.5.3, followed by not less than 7 days of trouble signal operation.
(5) The audible trouble signal is produced at least once every minute for 7 consecutive days.
(6) The trouble signal is allowed to be silenced for up to 12 hours.
(7) A visible "power on" indicator is provided.

NFPA 720

Δ **29.9.3 Household Fire and Carbon Monoxide Alarm Systems.** Power for household alarm systems shall comply with the following requirements:

(1) Household fire and carbon monoxide alarm systems shall have two independent power sources consisting of a primary source that uses commercial light and power and a secondary source that consists of a rechargeable battery.

The authority having jurisdiction should require the submission of battery calculations for household fire and CO alarm systems. These calculations are used to determine the capacity required for standby and alarm time requirements for the household alarm system when the standby power is supplied by rechargeable batteries. See Exhibit 29.13 for an example of a typical household fire alarm system.

(2) The secondary source shall be capable of operating the household alarm system for at least 24 hours in the normal condition, followed by 4 minutes of fire alarm or 12 hours of carbon monoxide alarm.

(a) Effective January 1, 2022, the secondary power source of the household carbon monoxide system shall be capable of operating the system for at least 12 hours of alarm in accordance with 29.5.3.

(b) The secondary power source of a household carbon monoxide system shall not be required to operate the system for 12 hours of alarm if the power source of carbon monoxide detectors and carbon monoxide audible notification appliances incorporating a low-power radio (wireless) transmitter/transceiver is capable of providing at least 24 hours in the normal condition, followed by 12 hours of alarm.

Paragraph 29.9.3(2) for household alarm systems incorporates CO requirements to ensure that household CO systems have the same level of safety protection as CO alarms listed as complying with ANSI/UL 2034, *Standard for Single and Multiple Station Carbon Monoxide Alarms*. However, the date of January 1, 2022, was added because manufacturers will need time to redesign, test, and get products listed to meet the new increased secondary power requirement.

EXHIBIT 29.13

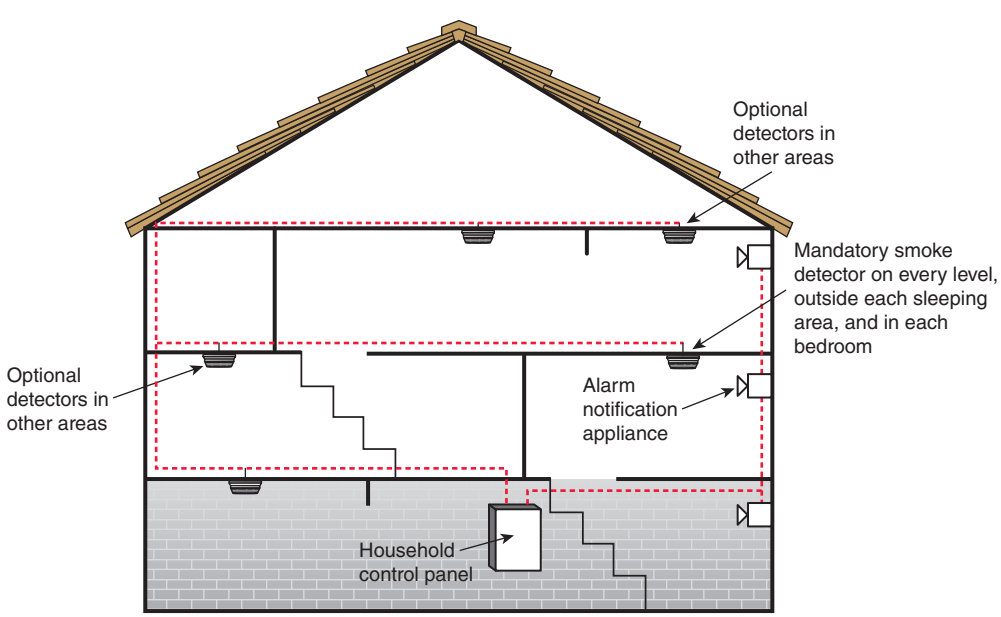

Household Fire Alarm System. (Source: JENSEN HUGHES, Baltimore, MD)

Subsection (b) exempts the household control unit/system (listed as complying with ANSI/UL 985, *Standard for Household Fire Warning System Units*) from meeting the new CO secondary power requirement if the low-power (wireless) CO detectors (listed as complying with ANSI/UL 2075, *Standard for Gas and Vapor Detectors and Sensors*) are capable of meeting the 12-hour requirement. The reason for this change is that there are wireless CO detectors on the market capable of meeting the 12-hour alarm requirement.

(3) The secondary power source shall be supervised and shall cause a distinctive audible and visible trouble signal upon removal or disconnection of a battery or a low-battery condition.

(4) A rechargeable battery used as a secondary power source shall meet the following criteria:

(a) Be automatically recharged by an ac circuit of the commercial light and power source

(b) Be recharged within 48 hours

(c) Provide a distinctive audible trouble signal before the battery is incapable of operating the device(s) for alarm purposes

(5) Low-power wireless systems shall comply with the performance criteria of Section 23.16, except as modified by 29.10.8.1.1.

29.9.4 AC Primary Power Source. The ac power source specified in 29.9.1 and 29.9.3 shall comply with the following conditions: NFPA 720

(1) A visible "power on" indicator shall be provided.

The "power on" indicator in 29.9.4(1) is required on single- and multiple-station alarms as well as detectors that are part of a fire alarm or CO alarm system with a control unit.

(2) All electrical systems designed to be installed by other than a qualified electrician shall be powered from a source not in excess of 30 volts that meets the requirements for power-limited fire alarm circuits as defined in Article 760 of *NFPA 70*.

The voltage limit regulation in 29.9.4(2) is included in the Code to reduce the shock and fire hazards associated with the 120 VAC wiring. Most jurisdictions require licensed electricians to install all 120 VAC receptacles and connections. Some jurisdictions permit a licensed fire alarm technician to install any 120 VAC connection that is associated with the fire alarm system. It is imperative that the authority having jurisdiction be consulted regarding the fire alarm system's installation requirements.

(3)* A restraining means shall be used at the plug-in of any cord-connected installation, unless the unit utilizes a secondary (standby) power source meeting the requirements of Section 29.6 and loss of the ac primary power source results in annunciation of an audible trouble signal meeting 29.7.6.4.

N **A.29.9.4(3)** Restraining means are not intended to be used where the detector or alarm is designed to be plugged directly into a receptacle without a cord.

Cord-connected alarms are effective only when the power supply is not interrupted. In most residential situations, accidental bumping of the plug or inadvertent removal is a real possibility. The requirement in 29.9.4(3) is intended to reduce the risk of unplugging the equipment. It applies to

the plug-in of any cord-connected alarm or notification appliance as well as control unit–powered household systems with plug-in-type connections to ac power (e.g., a plug-in-type transformer). The requirement does not apply to alarms or detectors designed to be plugged directly into a receptacle without a cord.

(4) AC primary (main) power shall be supplied either from a dedicated branch circuit or the unswitched portion of a branch circuit also used for power and lighting.

When single- or multiple-station alarms are installed, a good practice is to connect the power to a branch circuit serving lighting outlets in a habitable area, such as a hallway, living room, or family room. This practice ensures that, if for any reason the circuit breaker is tripped or in the "off" position, the condition will be noticed quickly because lights and other loads used frequently in the dwelling unit will not operate.

The power connection to a household fire or CO alarm control unit can be connected in the same way. If connecting to a branch circuit that serves lighting and other loads, the installer must ensure that the circuit is not overloaded, which would cause the circuit breaker to trip frequently. Some state and local codes require this power connection to be made to a dedicated branch circuit. Consult with the authority having jurisdiction to determine if local codes or regulations differ from the Code requirements in this subsection.

For standard (compared to those addressed in 29.9.8) single- and multiple-station alarms, the power must not be connected to the switched portion of a branch circuit. Connection to a switched portion of a circuit will likely lead to the alarms being disabled without the occupants' knowledge.

(5) Operation of a switch (other than a circuit breaker) shall not cause loss of primary (main) power. Alarms powered by branch circuits protected by arc-fault circuit-interrupters (AFCI) or ground-fault circuit-interrupters (GFCI) shall have a secondary power source.

NFPA 70®, *National Electrical Code®* (*NEC®*), requires that all 120-volt outlets in bedrooms, which includes 120 volt–powered smoke alarms, be protected by an AFCI.

FAQ What is required when an alarm is powered by an AFCI circuit?

In response to concerns about whether alarms would be functional if the AFCI activated and prevented the alarm from being powered, 29.9.4(5) was added to the 2007 edition of the Code to require that any alarm powered by an AFCI circuit must have a secondary power source. The *NEC* was also modified with an informational note in 210.12(A)(6) to refer readers to *NFPA 72* for more about secondary power source requirements. Due to the advent of combination circuit breakers that include both AFCI and GFCI protection, this requirement was extended to circuits supplied through a ground-fault circuit-interrupter (GFCI) circuit breaker in the 2013 edition of the Code.

(6) Neither loss nor restoration of primary (main) power shall cause an alarm signal that exceeds 2 seconds.

Generally, a loss or restoration of power is not permitted to cause an alarm signal. However, 29.9.4(6) permits a 120 VAC single- and multiple-station alarm and system-based notification appliances to sound briefly (2 seconds or less) to alert the occupant that the power has been interrupted.

(7) Where a secondary (standby) battery is provided, the primary (main) power supply shall be of sufficient capacity to operate the system under all conditions of loading with any secondary (standby) battery disconnected or fully discharged.

29.9.5 Secondary (Standby) Power Source. Where alarms include a battery that is used as a secondary power source, the following conditions shall be met: NFPA 720

(1) The secondary power source shall be supervised and shall cause a distinctive audible or visible trouble signal upon removal or disconnection of a battery or a low-battery condition.

Paragraph 29.9.5(1) requires that an obvious indicator be provided to signify that the battery is not properly connected or charged. Besides audible trouble signals, some alarms have physical indicators to show that a battery is missing or installed incorrectly. Such indicators include battery covers that do not close unless the battery is installed and mechanisms that prevent the alarm from being mounted to its base.

(2) Acceptable replacement batteries shall be clearly identified by the manufacturer's name and model number on the unit near the battery compartment.
(3) A rechargeable battery used as a secondary power source shall meet the following criteria:
   (a) Be automatically recharged by the primary power source
   (b) Be recharged within 4 hours where power is provided from a circuit that can be switched on or off by means other than a circuit breaker, or within 48 hours where power is provided from a circuit that cannot be switched on or off by means other than a circuit breaker
   (c) Provide a distinctive audible trouble signal before the battery is incapable of operating the device(s) for alarm purposes
   (d) At the battery condition at which a trouble signal is obtained, be capable of producing a fire alarm signal for at least 4 minutes or the carbon monoxide signal for 12 continuous hours, followed by not less than 7 days of trouble signal operation
   (e) Produce an audible trouble signal at least once every minute for 7 consecutive days

(4) Where required by law for disposal reasons, rechargeable batteries shall be removable.

29.9.6 Visual Notification Appliance (with Single- or Multiple-Station Alarm). If a visual notification appliance is used in conjunction with a single- or multiple-station alarm for compliance with 29.5.8, the notification appliance shall not be required to be supplied with a secondary power source. NFPA 720

Δ **29.9.7 Primary Replaceable Battery, Sole Power Source (Nonrechargeable).** If alarms are powered solely by a replaceable primary battery, the battery shall be monitored to ensure the following conditions are met: NFPA 720

(1) All power requirements are met for at least 1 year of battery life, including weekly required periodic testing.
(2) A distinctive audible trouble signal before the battery is incapable of operating the device(s) for alarm purposes.
(3) For a system-connected unit employing a lock-in alarm feature, automatic transfer is provided from alarm to a trouble condition when the unit has insufficient power to support an alarm condition.

(4) At the battery voltage at which a trouble signal is obtained, the unit is capable of producing a fire alarm signal for at least 4 minutes or a carbon monoxide alarm signal for at least 12 continuous hours, followed by not less than 7 days of trouble signal operation.
(5) The audible trouble signal is produced at least once every minute for 7 consecutive days.
(6) Acceptable replacement batteries are clearly identified by the manufacturer's name and model number on the unit near the battery compartment.
(7) A noticeable, visible indication is displayed when a primary battery is removed from the unit.

Battery-powered alarms are unfortunately not always maintained by household occupants after they are installed. NFPA studies indicate that in nearly 20 percent of households that had at least one smoke alarm, none were working [Ahrens, 2007]. This was primarily because of dead or missing batteries. The requirements of 29.9.7 ensure a minimum level of safe operation and promote proper use and maintenance of the alarm.

The trouble signal requirement allows occupants to be alerted to an imminent battery failure. However, many homeowners or tenants do not recognize the trouble signal and may think it is a nuisance alarm. Establishing a routine battery replacement program is important to keep alarms functioning. A popular program sponsored by the International Association of Fire Chiefs in conjunction with a battery manufacturer is the "Change Your Clocks, Change Your Batteries" campaign. This program reminds people to change the batteries in their smoke alarms when daylight saving time begins and again when it ends. In those few areas where time changes are not observed, some other means of public awareness should be devised.

The requirement for a minimum of 7 days of trouble signals and weekly testing of battery-powered alarms is based on the need to warn occupants of low-power conditions after reasonable vacancies of the dwelling unit. Dwellings are commonly empty for periods of up to 7 days while occupants are on vacation. Occupants should test an alarm on returning from an extended absence to ensure the unit is still properly powered. Many alarms provide trouble signals beyond the 7-day minimum requirement.

NFPA 720 Δ **29.9.8 Primary Power Source (Rechargeable Battery).** If alarms are powered by a rechargeable battery, the following conditions shall be met:

(1) The battery shall, with proper charging, be able to power the alarm for a life of 1 year.
(2) The battery shall be automatically recharged by a circuit of the commercial light and power source.
(3) The battery shall be recharged within 4 hours where power is provided from a circuit that can be switched on or off by means other than a circuit breaker or within 48 hours where power is provided from a circuit that cannot be switched on or off by means other than a circuit breaker.
(4) A distinctive audible trouble signal shall sound before the battery is incapable of operating the device(s) for alarm purposes.
(5) For a unit employing a lock-in alarm feature, automatic transfer shall be provided from alarm to a trouble condition.
(6) At the battery condition at which a trouble signal is obtained, the unit shall be capable of producing a fire alarm signal for at least 4 minutes or a carbon monoxide alarm signal for 12 continuous hours, followed by not less than 7 days of trouble signal operation.
(7) The audible trouble signal shall be produced at least once every minute for 7 consecutive days.
(8) The battery shall be nonremoveable, or a noticeable and visible indication shall be displayed when the battery is removed from the unit.

FAQ

Alarms powered by primary rechargeable batteries are permitted to be connected to what types of circuits?

Item (8) has been added to ensure that a source of power is present with a permanent battery or that a clearly identifiable indication is provided when a removable battery is not present in the unit.

The requirements for rechargeable battery-powered alarms permit devices that are automatically charged by an ac circuit (switched or unswitched). Rechargeable battery–powered alarms connected to a switched ac light source have been designed to offer various test and use features, such as switch-controlled silence and functional test capabilities that are not available with standard battery-powered alarms. The use of automatically rechargeable batteries meeting the requirements of 29.9.8 should reduce the number of occurrences of nonfunctioning alarms caused by people forgetting to replace batteries. Current technologies produce batteries with functional lives of 10 years, which is longer than the minimum required in 29.9.8(1).

As noted in the commentary following 29.9.1(4), battery-powered alarms — in which the battery is the primary power source — are permitted only in certain existing occupancies. They are not permitted in new construction by building codes, which typically require unswitched ac primary power with battery back-up.

Δ **29.9.9 Secondary (Standby) Non-Battery Power Source.** Where alarms include a secondary power source (non-battery), the following conditions shall be met: NFPA 720

(1) The secondary power source shall be supervised and shall cause a distinctive audible or visible trouble signal upon depletion or failure.
(2) A distinctive audible trouble signal shall be provided before the power source is incapable of operating the device(s) for alarm purposes.
(3) At a power source condition at which a trouble signal is obtained, the power source shall be capable of producing a fire alarm signal for at least 4 minutes or a carbon monoxide alarm signal for at least 12 continuous hours, followed by not less than 7 days of trouble signal operation.
(4) The audible trouble signal shall be produced at least once every minute for 7 consecutive days.
(5) A rechargeable secondary power source shall meet the following criteria:
    (a) Be automatically recharged
    (b) Be recharged within 4 hours where power is provided from a circuit that can be switched on or off by means other than a circuit breaker or within 48 hours where power is provided from a circuit that cannot be switched on or off by means other than a circuit breaker

29.10 Equipment Performance.

29.10.1 Self-Diagnostic. Any failure of any nonreliable or short-life component that renders the detector inoperable shall result in a trouble signal or otherwise be apparent to the occupant of the living unit without the need for test.

Subsection 29.10.1 requires the supervision of the alarm's sensor electronics, all the alarm's circuitry, and some form of audible or visible indication of detector component failure, such as indicator lights or a distinctive audible trouble signal.

29.10.2* Smoke Alarms, System Smoke Detectors, and Other Non-Heat Fire Detectors. Each device shall detect abnormal quantities of smoke or applicable fire signature,

shall operate in the normal environmental conditions, and shall be in compliance with applicable standards such as ANSI/UL 268, *Standard for Smoke Detectors for Fire Alarm Systems*, or ANSI/UL 217, *Standard for Single and Multiple Station Smoke Alarms*.

A.29.10.2 The UL listing for smoke alarms addresses two categories of these devices: one for applications where sensitivity testing is not required (UTGT), and one for applications where sensitivity testing is required (UTHA). Refer to the testing requirements for these devices in Chapter 14.

ANSI/UL 268, *Standard for Smoke Detectors for Fire Alarm Systems,* is the standard for "system" smoke detectors. These detectors are connected to and powered by a control unit and may also have integral notification appliances, depending on the model and manufacturer. All ac-powered, battery-powered, or combination ac- and battery-powered single- and multiple-station smoke alarms must comply with an applicable standard such as ANSI/UL 217 to be listed. Both the ionization-type and the photoelectric-type smoke detectors/smoke alarms are available under ANSI/UL 268 or ANSI/UL 217.

Subsection 29.10.2 applies to any device or system that responds to smoke or other fire signatures (except for CO-only and heat-only detectors). In all cases, the equipment must be in compliance with applicable standards. As newer technologies become available, such as multi-sensor detection, these will have to demonstrate equivalent or better performance to current smoke detectors and smoke alarms tested per ANSI/UL 268 or ANSI/UL 217.

NFPA 720

N **29.10.3 Carbon Monoxide Alarms and Detectors.**

N **29.10.3.1*** Each carbon monoxide alarm shall be in compliance with ANSI/UL 2034, *Standard for Single and Multiple Station Carbon Monoxide Alarms*.

N **A.29.10.3.1** ANSI/UL 2034, *Standard for Single and Multiple Station Carbon Monoxide Alarms*, includes a level below which the alarm should not respond.

N **29.10.3.2** Each carbon monoxide detector shall be in compliance with ANSI/UL 2075, *Standard for Gas and Vapor Detectors and Sensors*, and shall meet the sensitivity testing and alarm thresholds of ANSI/UL 2034, *Standard for Single and Multiple Station Carbon Monoxide Alarms*.

N **29.10.3.3** All signals produced from periodic testing of carbon monoxide alarms or detectors shall be identical to the signal produced when the unit is in alarm.

N **29.10.3.4** Trouble signals shall be distinctive from alarm signals.

ANSI/UL 2075 is the standard for "system" CO detectors. Paragraph 29.10.3.2 requires that CO detectors meet the same sensitivity requirements for CO alarms as specified in ANSI/UL 2034.

The Code requires that a CO alarm signal be distinct from a fire alarm. The T-4 signal is the prescribed alarm signal for CO and was previously defined and required in NFPA 720. (Also see 29.5.3.) Paragraph 29.10.3.3 requires that test signals of alarm be the same as the actual alarm signal.

N **29.10.3.5** Unless otherwise recommended by the manufacturer's published instructions, carbon monoxide alarms and detectors shall be replaced when they fail to respond to tests.

29.10.4* Heat Detectors and Heat Alarms.

A.29.10.4 The linear space rating is the maximum allowable distance between heat detectors. The linear space rating is also a measure of detector response time to a standard test fire when tested at the same distance. A higher rating corresponds to a faster response time. This Code recognizes only those heat detectors with ratings of 50 ft (15.2 m) or more.

29.10.4.1 Each heat detector and heat alarm, including a heat detector or heat alarm integrally mounted on a smoke detector or smoke alarm, shall detect abnormally high temperature or rate-of-temperature rise, and all such detectors shall be listed for not less than 50 ft (15.2 m) spacing.

29.10.4.2* Fixed-temperature detectors or alarms shall have a temperature rating at least 25ºF (14ºC) above the normal ambient temperature and shall not be rated 50ºF (28ºC) higher than the maximum anticipated ambient temperature in the room or space where installed.

A.29.10.4.2 A heat detector with a temperature rating somewhat in excess of the highest normally expected ambient temperature is specified in order to avoid the possibility of premature response of the heat detector to non-fire conditions.

Some areas or rooms of the dwelling unit can experience ambient temperatures considerably higher than those in the normally occupied living spaces. Examples are unfinished attics, the space near hot air registers, and some furnace rooms. This fact should be considered in the selection of the appropriate temperature rating for fixed-temperature heat detectors to be installed in these areas or rooms.

System Design Tip

Subsection 29.10.4 permits fixed-temperature heat detectors (see Exhibit 29.14) and rate-of-rise heat detectors (see Exhibit 29.15). Rate-of-rise heat detectors respond to rapid temperature increases. The designer should consider the environment in which rate-of-rise heat detectors are to be installed. Areas near dishwashers, hot air vents, and ovens are examples of areas to be avoided.

29.10.5 Operability. Single- and multiple-station alarms, including heat alarms, shall be provided with a convenient means for testing its operability by the occupant, system owner, or other responsible parties.

Alarms are required to be tested in accordance with the provisions in the manufacturer's published instructions. Refer to 14.4.5 and Table 14.4.3.2, Item 17(7)(b), for smoke alarms, and Table 14.4.3.2, Item 17(4)(f), for heat alarms, Item 17(9) for CO alarms. In most cases, the built-in test feature can be used for testing these devices. Listed test aerosol can be used for smoke alarms as long as the smoke alarm manufacturer does not prohibit its use.

Open flames should never be used to test smoke or heat alarms because of the obvious fire hazard. Homeowners who are unable to perform operability tests should consider a service contract.

EXHIBIT 29.14

Fixed-Temperature Combination Smoke Alarm and Heat Alarm. (Source: Gentex Corporation, Zeeland, MI)

29.10.6 Control Unit.

Δ **29.10.6.1** The control unit shall be automatically restoring upon restoration of electrical power.

Δ **29.10.6.2*** The control unit shall be of a type that "locks in" on an alarm condition.

The control unit must have a "locks-in" feature, as required by 29.10.6.2. System-connected smoke detectors using a control unit are required by ANSI/UL 268 to provide a lamp or equivalent on a spot-type detector head or base to identify it as the unit from which the alarm was initiated. ANSI/UL 268 requires that the means incorporated to identify the initiation of an alarm remain activated after the smoke has dissipated from within the detector. The locks-in feature is, therefore, required on all spot-type smoke detectors connected to a control unit.

EXHIBIT 29.15

Low-Profile Rate-of-Rise Heat Detector. (Source: Edwards, Bradenton, FL)

A.29.10.6.2 Listed household fire alarm systems have a means to allow users to cancel or abort an actuate fire alarm signal when they know it is an unwanted alarm.

N **29.10.6.3** Smoke detection circuits shall not be required to lock in.

29.10.6.4 If a reset switch is provided, it shall be of a self-restoring (momentary operation) type.

29.10.6.5 A means for silencing the trouble notification appliance(s) shall be permitted only if the following conditions are satisfied:

(1) The means is key-operated or located within a locked enclosure, or arranged to provide equivalent protection against unauthorized use.
(2) The means transfers the trouble indication to an identified lamp or other acceptable visible indicator, and the visible indication persists until the trouble condition has been corrected.

The requirements in 29.10.6.5 can be satisfied with a password-protected interface, such as a fire alarm/security system keypad, that visibly displays the trouble condition. See Exhibit 29.16 for a keypad display arrangement that might satisfy this requirement.

Δ **29.10.6.6** A means for turning off actuated alarm notification appliances shall be permitted only if the following conditions are satisfied:

(1) The means is key-operated or located within a locked cabinet or arranged to provide equivalent protection against unauthorized use.
(2) The means includes the provision of a visible alarm silence indication.
(3) The silenced position is indicated by a distinctive signal.
(4) The switch is a momentary or self-restoring switch.

EXHIBIT 29.16

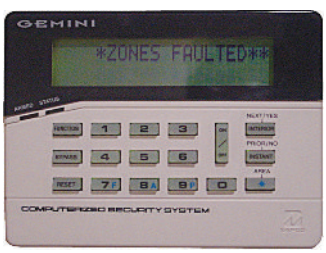

Keypad with Display. (Source: NAPCO Security Systems, Inc. — Gemini, Amityville, NY)

29.10.6.7 Initiating devices and notification appliances connected to household control units shall be monitored for integrity so that the occurrence of a single open or single ground fault in the interconnection, which prevents normal operation of the interconnected devices, is indicated by a distinctive trouble signal.

29.10.6.8 The control unit shall be in compliance with applicable standards such as ANSI/UL 985, *Standard for Household Fire Warning System Units*; ANSI/UL 1730, *Standard for Smoke Detector Monitors and Accessories for Individual Living Units of Multifamily Residences and Hotel/Motel Rooms*; or ANSI/UL 864, *Standard for Control Units and Accessories for Fire Alarm Systems*.

The requirement in 29.10.6.8 establishes appropriate standards for system control equipment and indicates that either household fire alarm systems or commercial systems can be used as equivalent in residential applications.

29.10.6.9 Any data exchange between the control unit and separate independent devices via remote access shall not compromise the integrity of the fire alarm system.

Δ **29.10.6.10** Remote resetting and silencing of a control unit from other than the protected premises shall be inhibited for a minimum of 4 minutes from the initial activation of the fire alarm signal.

The requirements in 29.10.6.9 and 29.10.6.10 were added in the 2016 edition of the Code to reinforce the necessity of maintaining the priority of the fire alarm system and to safeguard against incorrect resetting or silencing of the system from a remote location before providing sufficient time to warn occupants of a fire emergency. The increasing integration of devices with Internet connectivity and control poses potential concerns of inadvertent interference or consequences. These new requirements are intended to safeguard against these issues.

N **29.10.6.11** Each electrical carbon monoxide detection system shall have an integral test means to allow testing of the system operation. NFPA 720

29.10.7 Combination System.

29.10.7.1 If designed and installed to perform additional functions, fire- and carbon monoxide–warning equipment shall operate reliably and without compromise to its primary functions. NFPA 720

29.10.7.2 Fire signals shall take precedence over any other signal or functions, even if a non-fire signal is actuated first.

The emergency evacuation signal, as required in 29.5.1, must override all other notification signals if a fire alarm occurs.

29.10.7.3 Fire and carbon monoxide signals shall be distinctive so that a fire or carbon monoxide signal can be distinguished from all other signals. NFPA 720

N **29.10.7.4** The use of a common audible notification appliance shall be permitted as long as distinctive signals are generated. NFPA 720

Unless the fire alarm signals are unique, they could be confused with security alarms, CO alarms, or other signals in the home. Where the intended response is to evacuate, the Code requires systems to produce the audible emergency evacuation signal described in ANSI/ASA S3.41. The requirement for a unique signal does not mean that two separate notification appliances must be used.

A single notification appliance may be used, provided that it can supply different, distinctive signals. For example, a fully integrated system might sound the T-3 signal for a fire alarm, sound a different signal for a security alarm, and sound a third signal to indicate detection of excessive levels of carbon monoxide. (See 29.5.1 and 29.5.3 for the required signals for fire and CO, respectively.)

29.10.7.5 Faults in other systems or components shall not affect the operation of the fire alarm system.

29.10.7.6 Where common wiring is employed for a combination system, the equipment for other than the fire and carbon monoxide alarm system shall be connected to the common wiring of the system so that short circuits, open circuits, grounds, or any fault in this equipment or interconnection between this equipment and the fire and carbon monoxide alarm system wiring does not interfere with the supervision of the fire and carbon monoxide alarm system or prevent alarm or trouble signal operation. NFPA 720

Fire- and CO-warning systems in dwellings are permitted to be combination systems. Refer to the definition of the term *combination system* in 3.3.111.1. Equipment not required for the operation of the fire alarm system that is modified, removed, or malfunctioning in any way must not impair the operation of the fire alarm system.

See Exhibit 29.17 for a typical listed combination fire/burglar alarm control unit.

29.10.7.7 Audible notification signals shall be provided in the following priority order: NFPA 720

(1) Fire alarm
(2) Carbon monoxide
(3) Other

Paragraph 29.10.7.7 clarifies the priority of audible signals to initiate the proper response of occupants relative to the threat. Fire alarms and CO alarms take precedence over all other signals that may be produced by the system.

EXHIBIT 29.17

Combination Household Fire/ Burglar Alarm System. (Source: Bosch Security Systems, Fairport, NY)

Δ **29.10.7.8*** Installations that include the connection of single- or multiple-station alarms with other input or output devices shall be permitted.

A.29.10.7.8 Such input and output devices include, but are not limited to, relay modules, notification appliances, phone dialers, system control units, heat detectors, and manual fire alarm boxes.

Paragraph 29.10.7.8 permits the interconnection of smoke alarms with other input or output devices. The requirements of this paragraph also coincide with ANSI/UL 217, which requires a fault to allow alarms to operate as single-station alarms.

N **29.10.7.8.1** An open, ground fault, or short circuit of the wiring connecting input or output devices to the single- or multiple-station alarms shall not prevent operation of each individual alarm.

29.10.7.8.2 Single- or multiple-station smoke alarms shall be permitted to be connected to system control equipment located within the dwelling unit.

29.10.7.8.3 When connected, the actuation of a single- or multiple-station smoke alarm shall initiate an alarm signal at the system control equipment located within the dwelling unit.

Paragraphs 29.10.7.8.2 and 29.10.7.8.3 clarify the permitted connection of smoke alarms to system control equipment and require these alarms to initiate an alarm signal in the dwelling unit. Alarms in a dwelling unit should not initiate an alarm throughout a building, such as an apartment complex or hotel. However, alarms in individual dwelling units may be monitored at a central location within the facility, such as an on-site security office or main desk.

29.10.7.8.4 A sprinkler waterflow alarm initiating device shall be permitted to be connected to the multiple-station alarms or household fire alarm system to actuate an alarm signal.

Paragraph 29.10.7.8.4 clarifies the permitted connection of a sprinkler waterflow alarm initiating device to smoke alarms or a household fire alarm system to activate an alarm signal. The intent of the waterflow alarm is to indicate that the sprinkler system has activated. If the waterflow alarm is in response to a fire (as designed), the intended action for occupants is to evacuate.

29.10.8 Wireless Devices.

29.10.8.1 Wireless Systems. Household fire alarm systems utilizing low-power wireless transmission of signals within the protected dwelling unit shall comply with the requirements of Section 23.16, except as modified by 29.10.8.1.1.

Paragraph 29.10.8.1 is specific to wireless household fire alarm systems and requires these systems to meet the same requirements as commercial wireless fire alarm systems. Note that the 2013 edition of the Code, in 23.16.4.5, required a distinctive supervisory signal when the radio transmitter was removed from its installed location. The 2016 edition of the Code changed the distinctive supervisory signal to a distinctive trouble signal. Wireless fire alarm systems should not be confused with wireless interconnected smoke alarms, which are addressed separately in 29.10.8.2.

29.10.8.1.1 The requirements of 23.16.4.2 shall not apply where periodic monitoring for integrity complies with all of the following:

(1) Each low-power transmitter/transceiver shall transmit check-in signals at intervals not exceeding 80 minutes.
(2) Any transmission interruption between a low-power radio transmitter/transceiver and the receiver/fire alarm control unit exceeding 4 hours shall cause a latching trouble signal at the household fire alarm control unit/operator interface.
(3) Low-power transmitters/transceivers shall be limited to serving a single initiating device; however, a single initiating device shall be permitted to send multiple types of alarm signals.
(4) Redundant retransmission devices (repeaters) shall be provided such that disconnecting or failure of any single retransmission device (repeater) does not interrupt communications between any low-power transmitter/transceiver and the receiver/fire alarm control unit.

Due to changes for fire alarm systems, 29.10.8.1.1 was added in the 2016 edition of the Code. This paragraph leaves the existing monitoring for integrity (supervision) requirements of household fire alarm systems using low-power radio (wireless) transmitters unchanged from that in the 2010 edition and in effect before June 2013. An 80-minute check-in requirement was added to ensure at least three polling attempts in 4 hours.

29.10.8.2 Nonsupervised Wireless Interconnected Alarms.

Multiple-station alarms that are capable of being interconnected through wireless radio signals rather than hard-wired connections have been on the market since mid-2005. The paragraphs in 29.10.8.2 provide clear performance requirements for the wireless interconnection of these alarms. Interconnection of smoke alarms can provide early warning, ensure proper sound levels, and increase the available escape time in home fire scenarios. Because of these capabilities, *NFPA 72* requires all homes to have interconnected alarms (see 29.7.2 and 29.8.2.1.1 and related commentary).

Before the 2010 edition of the Code, neither *NFPA 72* nor ANSI/UL 217 had specifications for the distance that wireless alarms must communicate. Consequently, detailed methods and requirements were developed to ensure that devices will properly respond when spaced up to 100 ft (30.5 m) apart in a dwelling. Additional background for the development of these requirements is provided in A.29.10.8.2.1.

Δ **29.10.8.2.1*** To ensure adequate transmission and reception capability, nonsupervised, low-power wireless alarms shall be capable of reliably communicating at a distance of 100 ft (30.5 m) indoors as tested to an equivalent open area test distance, D_{EOAT}, between two devices in accordance with Equations 29.10.8.2.1a and 29.10.8.2.1b.

$$D_{EOAT} = 30.5 \times \left(10^{\frac{L_b}{40}}\right) \qquad \textbf{[29.10.8.2.1a]}$$

where:
L_b = the building attenuation factor

$$L_b = 4 \times L_W + L_f \qquad \textbf{[29.10.8.2.1b]}$$

where:
L_w = attenuation value of a wall
= $2 \times L_1 + L_2$
L_f = attenuation value of a floor
= $L_1 + L_2 + L_3 + L_4$
L_1 = frequency-dependent attenuation value for ½ in. (13 mm) drywall
L_2 = frequency-dependent attenuation value for 1½ in. (38 mm) structural lumber
L_3 = frequency-dependent attenuation value for ¾ in. (19 mm) plywood
L_4 = frequency-dependent attenuation value for ½ in. (13 mm) glass/tile floor

Δ **A.29.10.8.2.1** For RF waves traveling along the earth's surface, the signal power loss (in dB), L_p, can be calculated using the following plane-earth propagation loss model:

$$L_p = 10 \log\left[\frac{D_p^4}{h_{TX}^2 h_{RX}^2}\right] \qquad \textbf{[A.29.10.8.2.1a]}$$

where D_p represents the distance between the transmitter and receiver and h_{TX} and h_{RX} are the heights of the transmitter and receiver, respectively, above the earth.

The plane earth propagation model is a practical simplification and requires that h_{TX}, $h_{RX} << D_p$. It reflects the average expected attenuation due to distance of the RF carrier for a stationary set of radios with an essentially clear line of sight. It predicts maximum communications range only in the UHF band (300 MHz to 3 GHz) and is not dependent on frequency.

Inside a building, the model can be expanded to determine the total path loss, L_T, which includes the plane earth loss, L_p (equation A.29.10.8.2.1a), and the loss due to the building materials in the propagation path, L_b, as follows:

$$L_T = 10 \log\left[\frac{D_p^4}{\left(h_{TX} h_{RX}\right)^2}\right] + L_b \qquad \textbf{[A.29.10.8.2.1b]}$$

If an equivalent open area test distance, D_{EOAT}, is defined as follows:

$$L_T = 10 \log\left[\frac{D_{EOAT}^4}{\left(h_{TX} h_{RX}\right)^2}\right] \qquad \textbf{[A.29.10.8.2.1c]}$$

then D_{EOAT} can be shown to be:

$$D_{EOAT} = 10^{\frac{-L_T}{40}} \sqrt{h_{TX}} \sqrt{h_{RX}} = D_p \cdot 10^{\frac{L_b}{40}} \qquad \textbf{[A.29.10.8.2.1d]}$$

The D_{EOAT} function is used to calculate a test distance required to verify the functional range of wireless alarm products. As noted above in the right side of equation A.29.10.8.2.1d, the function represents two factors — one that describes the attenuation of a radio frequency signal due to plane earth propagation path loss (D_p), and one that describes the dwelling material losses (L_b) in the signal's propagation path. It is the combination of dwelling loss and propagation path loss that is used in the calculation of the test distance D_{EOAT}. The losses are expressed in dB, and the unit for distances is meter.

In reviewing average home sizes, a reliable (indoor) communication of 100 ft (30.5 m) is adequate for a majority of dwellings, based on an average house size of 2200 ft^2 (204 m^2) [National Association of Home Builders]. Construction materials of a home (walls and floors) can attenuate an RF signal, with the RF signal being attenuated more at higher frequencies [Stone, 1997]. Communication specifications for devices of this type are typically specified as open field (no obstructions) test distances and not in terms of attenuation. Therefore, the standard specifies a minimum open area test distance, D_{EOAT}, that the RF products must communicate. This distance is equal to 100 ft (30.5 m) (the longest straight line distance within a majority of homes) plus an additional distance that is equivalent to the attenuation of four walls and two floors (the most straight line obstructions in a majority of homes). The additional distance varies depending on the operating frequency of the product. Formulas for calculating D_{EOAT} are included below, along with examples for a number of different frequencies. These criteria are expected to yield reliable indoor communications at 100 ft (30.5 m) when used inside a majority of dwellings.

The building attenuation factor, L_b, represents the maximum attenuation value of typical floors and walls within a majority of structures. L_b is calculated using attenuation values of different materials. The following method is used to calculate L_b. The building materials attenuation coefficients specified in this application are taken from Stone, 1997. Other sources of appropriate building material attenuation coefficients can be used; however, testing organizations should apply values consistently for all products tested.

L_1 = frequency-dependent attenuation value for ½ in. (13 mm) drywall
L_2 = frequency-dependent attenuation value for 1½ in. (38 mm) structural lumber
L_3 = frequency-dependent attenuation value for ¾ in. (19 mm) plywood
L_4 = frequency-dependent attenuation value for ½ in. (13 mm) glass/tile floor
L_w = Attenuation value of a wall = $2 \times L_1 + L_2$
L_f = Attenuation value of a floor = $L_1 + L_2 + L_3 + L_4$

Assuming four walls and two floors,

$$L_b = 4 \times L_W + 2 \times L_f \qquad \textbf{[A.29.10.8.2.1e]}$$

The source for the equation in 29.10.8.2.1 is Stone, W. "Electromagnetic Attenuation in Construction Materials," National Institute of Standards and Technology, NISTIR 6055, 1997.

29.10.8.2.2 Fire alarm signals shall have priority over all other signals.

29.10.8.2.3 The maximum allowable response delay from activation of an initiating device to receipt and alarm/display by the receiver/control unit shall be 20 seconds.

29.10.8.2.4* Wireless interconnected smoke alarms (in receive mode) shall remain in alarm as long as the originating unit (transmitter) remains in alarm.

The requirement in 29.10.8.2.4 ensures that remote alarms will continue to be in alarm at least as long as the initiating alarm is in alarm. The requirement does not prohibit remote alarms from continuing to be in alarm after the initiating alarm stops under conditions in which the initiating alarm has been

damaged by a growing fire. However, this function would need to be balanced with the need to silence all alarms when activated by a nuisance source.

A.29.10.8.2.4 Receiving units that stay in alarm for 30 seconds or 1 minute longer than the transmitting alarm would provide additional protection if the first alarm is damaged due to a very fast growing fire. The persisting alarm signal would provide additional notification to occupants. This option needs to be considered in light of the potential for the longer alarm signals on receiving smoke alarms being a potential nuisance to occupants during test and other nuisance alarm events.

29.10.8.2.5 The occurrence of any single fault that disables a transceiver shall not prevent other transceivers in the system from operating.

The requirement in 29.10.8.2.5 ensures that the interconnection of wireless alarms throughout the occupancy will not be compromised by the failure of one unit to perform correctly.

29.10.9 Supervising Stations.

Δ **29.10.9.1*** Household alarm systems shall be permitted to be supervised by a supervising station or by a public emergency alarm reporting system.

N **A.29.10.9.1** *NFPA 72* does not require single- and multiple-station alarms and household alarm systems to send signals off-premises. However, if such supervision is elected by the owner or required by some other governing laws, codes, or standards, this section requires that it be done in accordance with other parts of this Code, except as noted.

In the 2019 edition, 29.10.9 was expanded beyond only addressing the "means to transmit…" to include other parts of the system or the processing of the signals by an operator. The requirements of 29.10.9.1.1 clarify that single- and multiple-station signals are required to transmit through a household alarm system. Paragraph A.29.10.9.2 now includes the recommended actions to be followed by supervising station personnel on receipt of a CO alarm.

N **29.10.9.1.1** Transmission of signals from single- and multiple-station alarms to a constantly attended supervising station or public emergency alarm reporting system shall be processed by a household alarm system.

N **29.10.9.1.2** Where off-premises supervision is provided, the system shall transmit at least a general alarm signal.

29.10.9.1.3 Transmission of trouble signals and supervisory signals shall be permitted.

N **29.10.9.2*** Supervising station systems and services shall meet the requirements of Chapter 26 for the type of system and type of service selected, except as modified by 29.10.9.5 through 29.10.9.10.

NFPA 720 *N* **A.29.10.9.2** Upon receipt of a carbon monoxide (CO) alarm signal, supervising station personnel should perform the following actions in the order listed:

(1) Where required by the emergency response agency, immediately retransmit indication of the carbon monoxide alarm signal to the communications center.
(2) The immediate retransmission should be permitted to be delayed by not more than 90 seconds where the jurisdiction permits the supervising station to first contact the protected premises to determine if the alarm was initiated by the activation of a test.
(3) Contact the responsible party(s) in accordance with the notification plan.

(4) Once contacted, the subscriber should be informed to take action in accordance with the manufacturer's published instructions, or where the manufacturer's published instructions are not available, the subscriber should be advised to take the following actions:
   (a) Immediately move to fresh air, either outdoors or by an open door or window.
   (b) Verify that all occupants are accounted for.
   (c) Do not reenter the premises or move away from an open door or window until the emergency service responders have arrived, the premises have been aired out, and the alarm remains in its normal condition.

N **29.10.9.3** Public emergency alarm reporting systems shall meet the requirements of Chapter 27, except as modified by 29.10.9.7 through 29.10.9.10.

N **29.10.9.4** Public emergency alarm reporting systems shall transmit signals to an emergency services communications system meeting the requirements of NFPA 1221.

29.10.9.5 Supervising station systems shall not be required to comply with requirements for indication of central station service in 26.3.4.

N **29.10.9.6** Alarm, supervisory, and trouble signals shall be permitted to be received at a listed central supervising station.

Paragraph 29.10.9.6 states that alarm, supervisory, and trouble signals are permitted to be received at a listed central supervising station.

29.10.9.7* Alarm signals shall be permitted to be verified prior to reporting them to the fire service, provided that the verification process does not delay the reporting by more than 90 seconds.

A.29.10.9.7 Where 29.10.9.7, which provides for screening alarm signals to minimize response to false alarms, is to be implemented, the following should be considered:

(1) Was the verification call answered at the protected premises?
(2) Did the respondent provide proper identification?
(3) Is it necessary for the respondent to identify the cause of the alarm signal?
(4) Should the public service fire communications center be notified and advised that an alarm signal was received, including the response to the verification call, when an authorized respondent states that fire service response is not desired?
(5) Should the public service fire communications center be notified and advised that an alarm signal was received, including the response to the verification call, for all other situations, including both a hostile fire and no answer to the verification call?
(6) What other actions should be required by a standard operating procedure?

Paragraph 29.10.9.7 permits supervising station personnel to place a verification call before retransmitting the alarm signal. The homeowner should use a preassigned personal identification code or password to verify that the source of an alarm signal does not require emergency response by the fire department. Although a verification call is permitted, it is highly preferable to have the alarm reported immediately unless the call is required by the owner.

29.10.9.8 Household fire alarm systems shall be programmed by the manufacturer to generate at least a monthly test of the communication or transmission means.

Paragraph 29.10.9.8 provides reliability for the system by requiring that a mandatory, automatic test for at least a monthly communications check be built into the system.

29.10.9.9 The activation of a keypad fire alarm signal shall require a manual operation of two simultaneous or sequential operations.

The requirement in 29.10.9.9 for two simultaneous or sequential operations to activate a keypad fire alarm signal was added in the 2013 edition of the Code as a means to avoid false alarms.

N **29.10.9.10** Communications methods shall comply with 29.10.9.10.1 through 29.10.9.10.6.

29.10.9.10.1 Where a digital alarm communicator transmitter (DACT) is used, the DACT serving the protected premises shall only require a single telephone line and shall only require a call to a single digital alarm communicator receiver (DACR) number.

29.10.9.10.2 Where a DACT is used, the DACT test signals shall be transmitted at least monthly.

FAQ

Where a digital alarm communicator transmitter (DACT) is used as the means of transmitting an alarm signal, how many telephone lines are required?

Where the means involves the use of a DACT, as defined in 3.3.74 of the Code, a single telephone line may be used.

29.10.9.10.3 Where a communication or transmission means other than DACT is used, only a single communication technology and path shall be required to serve the protected premises.

29.10.9.10.4 Where a communication or transmission means other than DACT is used, all equipment necessary to transmit an alarm signal shall be provided with a minimum of 24 hours of secondary power capacity and shall report a trouble condition indicating loss of primary power.

29.10.9.10.5 Failure of the communication path referenced in 29.10.9.10.3 shall be annunciated at the supervising station and at the protected premises within not more than 7 days of the failure.

29.10.9.10.6 A dedicated cellular telephone connection shall be permitted to be used as a single means to transmit alarms to a constantly attended remote monitoring location.

29.11 Installation.

29.11.1 General.

29.11.1.1 All equipment shall be installed in accordance with the manufacturer's published instructions and applicable electrical standards.

Equipment must be installed in a manner that is neat, safe, and easily maintained and that complies with all appropriate codes and standards.

29.11.1.2 All devices shall be so located and mounted that accidental operation is not caused by jarring or vibration.

Δ **29.11.1.3** All equipment shall be mounted so as to be supported independently of its attachment to wires.

Δ **29.11.1.4** The supplier or installing contractor shall provide the system owner or other responsible parties with the following: NFPA 720

(1) An instruction booklet illustrating typical installation layouts
(2) Instruction charts describing the operation, method, and frequency of testing and maintenance of the warning equipment
(3) Printed information for establishing an emergency evacuation plan
(4) Printed information to inform system owners where they can obtain repair or replacement service, and where and how parts requiring regular replacement, such as batteries or bulbs, can be obtained within 2 weeks
(5) Information noting both of the following:
  (a) Unless otherwise recommended by the manufacturer's published instructions, smoke alarms shall be replaced when they fail to respond to tests.
  (b) Smoke alarms shall not remain in service longer than 10 years from the date of manufacture unless otherwise provided by manufacturer's published instructions.
(6) The instructions required in 29.14.2 and 29.14.4

29.11.2 Interconnection of Multiple-Station Alarms. NFPA 720

Δ **29.11.2.1*** The interconnection of alarms shall comply with the following:

(1) Alarms shall not be interconnected in numbers that exceed the manufacturer's published instructions.
(2) In no case shall more than 18 initiating devices be interconnected (of which 12 can be smoke alarms) where the interconnecting means is not supervised.
(3) In no case shall more than 64 initiating devices be interconnected (of which 42 can be smoke alarms) where the interconnecting means is supervised.
(4) Alarms of different manufacturers shall not be interconnected unless listed as being compatible with the specific model.
(5) When alarms of different types are interconnected, all interconnected alarms shall produce the appropriate audible response for the phenomena being detected or remain silent.

•

A.29.11.2.1 Once these limits have been exceeded, a household fire alarm and/or carbon monoxide detection system should be installed.

It is important to remember that the configuration permitted in 29.11.2.1(2) incorporates heat alarms and CO alarms that may be connected to multiple-station smoke alarms. The number of multiple-station smoke alarms used to protect a residence is limited to 12 because the wiring that interconnects hard-wired smoke alarms is not monitored for integrity.

FAQ What course of action is needed when the number of smoke alarms exceeds 12?

For applications that require more than 12 smoke alarms, a fire alarm system with a control unit must be used.

For large residences that require many smoke alarms and the interconnection of different types of smoke alarms or sensors (such as CO or waterflow switches on a sprinkler system), the use of a household fire alarm system should be considered instead of smoke alarms. If multiple-station smoke alarms are to be interconnected with other types of alarms, the equipment must be listed as compatible. The manufacturers' published instructions provide guidance on the compatibility of equipment.

Paragraph 29.11.2.1(4) specifically requires that smoke alarms of different manufacturers are not to be interconnected unless they have been tested to be compatible. Interconnection of equipment from different manufacturers can lead to devices not operating as intended.

Paragraph 29.11.2.1(5) is based on the requirements in ANSI/UL 2034 for CO alarms and ANSI/UL 217 for smoke alarms to provide consistent notification from all interconnected alarms. Additional notification throughout a dwelling via smoke alarms interconnected with CO alarms can be beneficial when a CO alarm sounds. However, to avoid confusion, the alarm signal should be appropriate for the initiating device and should be the same from all sounding devices.

29.11.2.2 A single fault on the interconnecting means between multiple-station alarms shall not prevent single-station operation of any of the interconnected alarms.

Δ **29.11.2.3** Remote notification appliance circuits of multiple-station alarms shall be capable of being tested for integrity by activation of the test feature on any interconnected alarm.

The activation of remote notification appliances, which are part of a group of interconnected multiple-station alarms, should sound at all locations as well as at all multiple-station alarms. Testing at any alarm should sound all alarms and appliances. Proper distribution of the alarm signal throughout the dwelling unit (or other required area) can be checked during routine testing of the alarms.

N **29.11.2.4** Activation of the test feature shall result in the operation of all interconnected notification appliances.

29.11.3* Smoke Alarms and Smoke Detectors. Smoke alarms, smoke detectors, devices, combination of devices, and equipment shall be installed in accordance with the manufacturer's listing and published instructions, and, unless specifically listed for the application, shall comply with requirements in 29.11.3.1 through 29.11.3.4.

Compliance with the requirements in 29.11.3 is essential to provide an effective installation. In some cases, manufacturers have designed equipment that can be effective in applications that exceed Code-specified limits, such as those for temperature or humidity. In such cases, the equipment must be listed for the special conditions and be installed within the listed limits. Also refer to the commentary following 29.11.3.4.

The Code no longer requires at least a 4 in. (100 mm) spacing between a ceiling-mounted device and the adjoining wall or between a wall-mounted device and the ceiling. As noted in A.29.11.3, research and testing have shown that no reduction in performance occurs if detectors are positioned closer than 4 in. (100 mm) from the adjoining wall or ceiling surface. Note that this applies only to smoke alarms. Heat alarms are still required to comply with the 4 in. (100 mm) area of exclusion. Refer to 29.11.4.4.

Δ **A.29.11.3** One of the most critical factors of any fire alarm system is the location of the fire detecting devices. This annex is not a technical study. It is an attempt to provide some fundamentals on fire-warning equipment location. For simplicity, only those types of alarms or detectors recognized by Chapter 29 (e.g., smoke and heat alarms or smoke and heat detectors) are discussed. Specific mounting locations of fire-warning equipment in unoccupied or architecturally unique areas (e.g., as in attics or in rooms with high ceilings) should be evaluated by a qualified professional.

The conclusions of the Kemano Study and FPRF Smoke Detector Spacing Requirements Report (2008) have determined revisions to smoke alarm and smoke detector mounting within 4 in. (100 mm) of a flat ceiling/wall corner are now acceptable. The studies have shown that acceptable detection performance does not depend on the 4 in. (100 mm) separation. Figure A.29.11.3 illustrates acceptable smoke alarm and smoke detector mounting locations.

29.11.3.1* Peaked Ceilings. Smoke alarms or smoke detectors mounted on a peaked ceiling shall be located within 36 in. (910 mm) horizontally of the peak, but not closer than 4 in. (100 mm) vertically to the peak.

A.29.11.3.1 Figure A.29.11.3.1 illustrates acceptable smoke alarm or smoke detector mounting locations for a peaked ceiling.

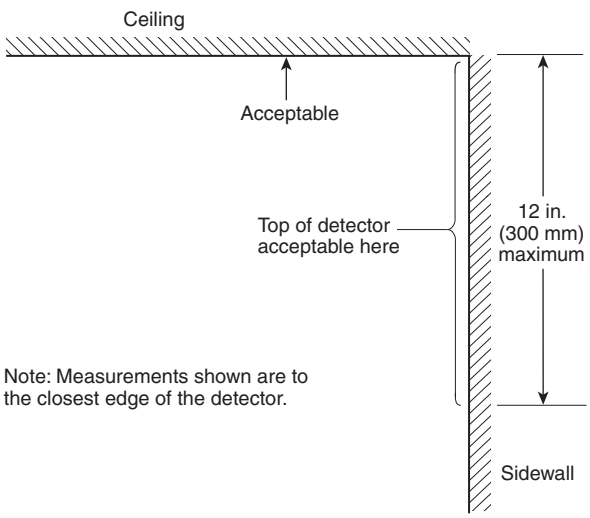

FIGURE A.29.11.3 Example of Proper Mounting for Smoke Alarms and Smoke Detectors.

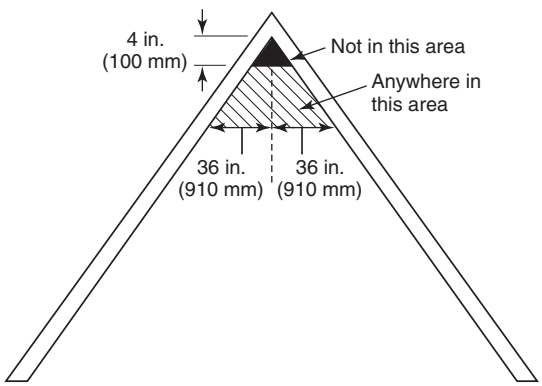

FIGURE A.29.11.3.1 Example of Proper Mounting for Alarms and Detectors with Peaked Ceilings.

29.11.3.2* Sloped Ceilings. Smoke alarms or smoke detectors mounted on a sloped ceiling having a rise greater than 1 ft in 8 ft (1 m in 8 m) horizontally shall be located within 36 in. (910 mm) of the high side of the ceiling, but not closer than 4 in. (100 mm) from the adjoining wall surface.

A.29.11.3.2 Figure A.29.11.3.2 illustrates acceptable smoke alarm or smoke detector mounting locations for a sloped ceiling.

29.11.3.3* Wall Mounting. Smoke alarms or smoke detectors mounted on walls shall be located not farther than 12 in. (300 mm) from the adjoining ceiling surface.

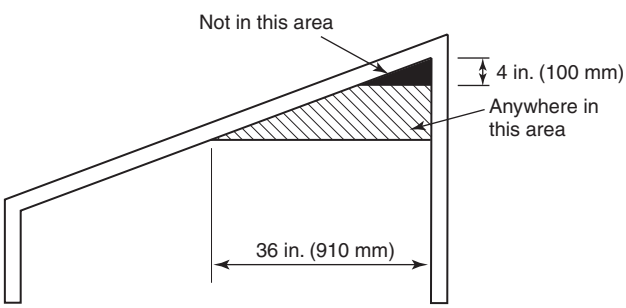

FIGURE A.29.11.3.2 Example of Proper Mounting for Alarms and Detectors with Sloped Ceilings.

A.29.11.3.3 Figure A.29.11.3 illustrates acceptable smoke alarm or smoke detector mounting locations.

In those dwelling units employing radiant heating in the ceiling, the wall location is the recommended location. Radiant heating in the ceiling can create a hot air boundary layer along the ceiling surface, which can seriously restrict the movement of smoke and heat to a ceiling-mounted detector.

29.11.3.4 Specific Location Requirements. The installation of smoke alarms and smoke detectors shall comply with the following requirements:

(1) Smoke alarms and smoke detectors shall not be located where ambient conditions, including humidity and temperature, are outside the limits specified by the manufacturer's published instructions.

Garages and attic spaces often experience ambient conditions that exceed the operating limits of smoke alarms. Smoke alarms listed to ANSI/UL 217 are tested to operate at temperatures from 32°F to 120°F (0°C to 49°C). However, some manufacturers' design and list devices that go beyond the standard temperature range. The use of heat alarms may be more appropriate in locations such as garages if conditions are not suitable for smoke alarms.

(2) Smoke alarms and smoke detectors shall not be located within unfinished attics or garages or in other spaces where temperatures can fall below 40ºF (4.4ºC) or exceed 100ºF (38ºC).

(3)* Where the mounting surface could become considerably warmer or cooler than the room, such as a poorly insulated ceiling below an unfinished attic or an exterior wall, smoke alarms and smoke detectors shall be mounted on an inside wall.

(4)* Smoke alarms and smoke detectors shall not be installed within an area of exclusion determined by a 10 ft (3.0 m) radial distance along a horizontal flow path from a stationary or fixed cooking appliance, unless listed for installation in close proximity to cooking appliances. Smoke alarms and smoke detectors installed between 10 ft (3.0 m) and 20 ft (6.1 m) along a horizontal flow path from a stationary or fixed cooking appliance shall be equipped with an alarm-silencing means or use photoelectric detection.

(5) Smoke alarms or smoke detectors that use photoelectric detection shall be permitted for installation at a radial distance greater than 6 ft (1.8 m) from any stationary or fixed cooking appliance when both of the following conditions are met:

(a) The kitchen or cooking area and adjacent spaces have no clear interior partitions or headers.

(b) The 10 ft (3.0 m) area of exclusion would prohibit the placement of a smoke alarm or smoke detector required by other sections of this Code.

The minimization of nuisance alarms is essential to help reduce the number of disabled smoke alarms. The primary source of nuisance alarms is cooking activities. Nuisance alarms caused by cooking activities occur more frequently with ionization smoke alarms than with photoelectric smoke alarms. However, nuisance alarms from either type of smoke alarm are likely if the smoke alarm is placed too close to a cooking appliance. For that reason, 29.11.3.4(4) excludes the installation of any smoke alarm within 10 ft (3.0 m) of a stationary or fixed cooking appliance. The exclusion area can be reduced to 6 ft (1.8 m) under the circumstance specified in 29.11.3.4(5). A further exclusion area between 10 ft (3.0 m) and 20 ft (6.1 m) is also specified. No exclusion is specified beyond 20 ft (6.1 m). Exhibit 29.18 shows an example of a photoelectric smoke detector located between 10 ft (3.0 m) and 20 ft (6.1 m) from a cooking appliance.

Nuisance alarms caused by steam from bathroom activities occur in both types of smoke alarms, but are more prevalent with photoelectric alarms. Refer to A.29.11.3.4(7) for additional guidance on location of smoke alarms near bathrooms.

EXHIBIT 29.18

Photoelectric Smoke Detector Located Between 10 ft (3.0 m) and 20 ft (6.1 m) from Cooking Appliance. (Source: R. P. Schifiliti Associates, Inc., Reading, MA)

(6) Effective January 1, 2022, smoke alarms and smoke detectors installed between 6 ft (1.8 m) and 20 ft (6.1 m) along a horizontal flow path from a stationary or fixed cooking appliance shall be listed for resistance to common nuisance sources from cooking.

Paragraph 29.11.3.4(6) was revised in the 2019 edition of the Code to change the effective date from January 1, 2019, to January 1, 2022. This change allows time for the establishment of a test standard and for the design of new products. The requirement establishes that smoke alarms and smoke detectors used between 6 ft (1.8 m) and 20 ft (6.1 m) of a fixed cooking appliance be listed for common cooking nuisance source resistance. The intent is to provide a higher level of performance in nuisance source immunity and to address the leading cause of nuisance sources — cooking events.

(7)* Smoke alarms and smoke detectors shall not be installed within a 36 in. (910 mm) horizontal path from a door to a bathroom containing a shower or tub unless listed for installation in close proximity to such locations.

Paragraph 29.11.3.4(7) clarifies that devices listed for installation close to bathroom doors are permitted within the 36 in. (910 mm) exclusion distance. This language is consistent with the general provisions for equivalency in Section 1.5, which permits the application of technologies that can meet the intended performance goals without being overly restrictive and inadvertently barring the use of capable equipment.

(8) Smoke alarms and smoke detectors shall not be installed within a 36 in. (910 mm) horizontal path from the supply registers of a forced air heating or cooling system and shall be installed outside of the direct airflow from those registers.

(9)* Smoke alarms and smoke detectors shall not be installed within a 36 in. (910 mm) horizontal path from the tip of the blade of a ceiling-suspended (paddle) fan unless the room configuration restricts meeting this requirement.

The 2019 edition changed item (9) to include the phrase "unless the room configuration restricts meeting this requirement" to permit a means to be code compliant where it is physically impossible to locate smoke alarms and detectors 36 in. (910 mm) or more from the tip of a fan blade. A limited study has indicated that placing alarms closer than 36 in. (910 mm) is not expected to produce an unacceptable risk, and in some cases, could improve performance [see A.29.11.3.4(9) for additional background].

(10) Where stairs lead to other occupiable levels, a smoke alarm or smoke detector shall be located so that smoke rising in the stairway cannot be prevented from reaching the smoke alarm or smoke detector by an intervening door or obstruction.

(11) For stairways leading up from a basement, smoke alarms or smoke detectors shall be located on the basement ceiling near the entry to the stairs.

Doors at the tops of stairwells prevent smoke flow in the upward direction. The stairwell acts as a dead air space and traps smoke below, which can prevent smoke from reaching a smoke alarm in the stairwell. For this reason, smoke alarms should be mounted on the basement ceiling near the stairwell, as required by 29.11.3.4(11). Common practice is to mount smoke alarms on the bottom of floor joists in basements with unfinished construction.

(12)* For tray-shaped ceilings (coffered ceilings), smoke alarms and smoke detectors shall be installed on the highest portion of the ceiling or on the sloped portion of the ceiling within 12 in. (300 mm) vertically down from the highest point.

For tray-shaped ceilings that are level at the top, smoke and heat alarms must be mounted on the high ceiling or on the sloped rise between levels within 12 in. (300 mm) vertically from the adjoining high ceiling, as required in 29.11.3.4(12). The other location requirements in 29.11.3.4 also apply. Exhibit 29.19 shows an example of a smoke detector on the sloped portion of a tray-shaped ceiling and at least 3 ft (910 mm) from the tip of the blade of the ceiling fan.

(13) Smoke alarms and detectors installed in rooms with joists or beams shall comply with the requirements of 17.7.3.2.4.

Per 17.7.3.2.4.2(5), if a room with a level ceiling is smaller than 900 ft^2 (84 m^2), only one smoke alarm or detector is required for the room, regardless of whether there are beams. Since most spaces that use smoke warning equipment per Chapter 29 are less than 900 ft^2 (84 m^2), no special attention is needed. However, if the space is larger or the ceiling is sloped, additional spacing requirements apply. These requirements depend on the height of the beams relative to the ceiling height and the orientation of beams relative to the ceiling slope.

EXHIBIT 29.19

Smoke Detector Located on Tray-Shaped Ceiling. (Source: R. P. Schifiliti Associates, Inc., Reading, MA)

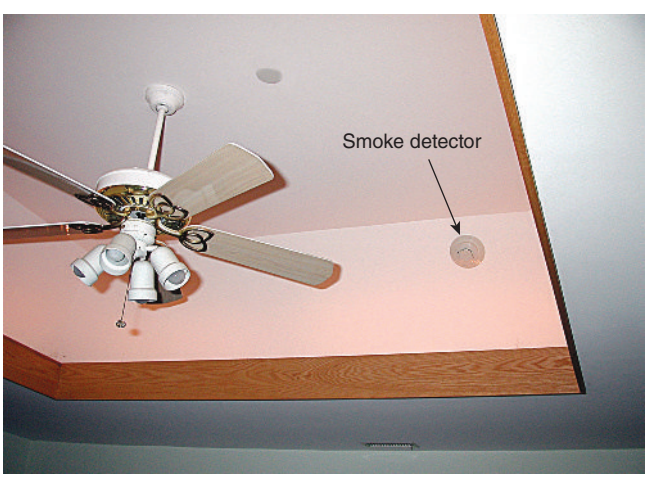

(14) Heat alarms and detectors installed in rooms with joists or beams shall comply with the requirements of 17.6.3.

The siting of heat alarms or detectors on ceilings with beams or joists follows the requirements of Chapter 17, which take into account beam depths and construction.

A.29.11.3.4(3) Smoke detectors and smoke alarms should be installed in those locations recommended by the manufacturer's published instructions, except in those cases where the space above the ceiling is open to the outside and little or no insulation is present over the ceiling. Such cases result in the ceiling being excessively cold in the winter or excessively hot in the summer. Where the ceiling is significantly different in temperature from the air space below, smoke and heat have difficulty reaching the ceiling and a detector that is located on that ceiling.

A.29.11.3.4(4) As per annex material located in A.29.8.1, it is not normally recommended that smoke alarms or smoke detectors be placed in kitchen spaces. This section of the code provides guidelines for safe installation if a need exists to install a smoke alarm or smoke detector in a residential kitchen space or cooking area.

Within this Code section, a fixed cooking appliance is any appliance that is intended to be permanently connected electrically to the wiring system or the fuel source. A stationary cooking appliance is any appliance that is intended to be fastened in place or located in a dedicated space, and is connected to the supply circuit or fuel source.

Smoke alarms and smoke detectors that are currently available to consumers are susceptible to particles released into the air during normal cooking procedures. If smoke alarms and smoke detectors are placed too close to the area where the cooking source originates, a high level of nuisance alarms can occur. Frequent nuisance alarms can result in an occupant disabling the smoke alarm or smoke detector.

Nuisance alarm studies show that commercially available residential smoke alarms and smoke detectors are susceptible to nuisance alarms when installed too close to cooking appliances. As the horizontal distance between the smoke alarm or smoke detectors and the cooking appliance increases, the frequency of nuisance alarms decreases. Smoke alarms or smoke detectors that use ionization smoke detection have been shown to be more susceptible to cooking nuisance alarms than those that use photoelectric smoke detection when the alarms or detectors are installed within 10 ft (3.0 m) along a horizontal smoke travel path from a cooking appliance. Smoke alarms or smoke detectors that use photoelectric smoke detection produce nuisance alarms when installed less than 10 ft (3.0 m) from a cooking appliance, though to a lesser degree.

The occurrence of the higher frequency of nuisance alarms observed in smoke alarms or smoke detectors that use ionization detection have been documented in the fire research data. Due to the differences in technology between ionization detection and photoelectric detection, the sensitivity typically used for ionization detection is much higher than that used for photoelectric detection. This sensitivity difference is a result of each type of the detection being required to satisfy UL 217 performance tests. Removing detection technology from consideration, the frequency of nuisance alarms is solely due to the sensitivity of the detection method used. Thus, both ionization and photoelectric detector technologies will produce nuisance alarms due to cooking, but currently available smoke alarms and smoke detectors that use ionization detection typically produce more cooking-related nuisance alarms.

The higher sensitivities of currently available smoke alarms and smoke detectors that use ionization detection do provide a benefit at the expense of a potentially higher rate of cooking-related nuisance alarms. Research has demonstrated that ionization detection will typically respond faster than photoelectric detection to flaming fires, providing earlier warning to occupants that might allow for quicker intervention or faster egress. In general, the installation of smoke alarms or smoke detectors that use ionization detection will result in increased fire

safety at the risk of a higher frequency of nuisance alarms. The installation of smoke alarms or smoke detectors that use photoelectric detection will result in reduced fire safety for flaming fires and a reduced risk of nuisance alarms. Based on the trade-off between faster response to fires and the frequency of nuisance alarms, detectors that utilize both technologies (i.e., ionization, photoelectric, and a combination) are allowed to be installed between 10 ft (3.0 m) and 20 ft (6.1 m) along a horizontal flow path from a standard or fixed cooking appliance if the specific detector is equipped with an alarm silencing means or is of the photoelectric-type.

Nuisance alarm studies provide data on cooking nuisances that emanate from both fixed cooking appliances and stationary cooking appliances (e.g., stove, oven) as well as portable cooking appliances (e.g., toaster). Based on these studies, which demonstrate the potential of all cooking appliances to generate nuisance sources, a zone of exclusion has been specified surrounding each stationary or fixed cooking appliance. The purpose of this zone is to limit the installation of smoke alarms and detectors in areas where stationary, fixed, or portable cooking appliances will be located within the residential kitchen space such that potential nuisance alarms are minimized. The size of the zone of exclusion is specified to attempt to take into account the unknown and transitory locations of portable cooking appliances. This zone of exclusion is determined by measuring a 10 ft (3.0 m) radial distance from the closest edge of a stationary or fixed cooking appliance. The zone of exclusion is not intended to pass through walls or doorways. Figure A.29.11.3.4(4)(a) provides an example of the zone of exclusion in a generalized residential kitchen.

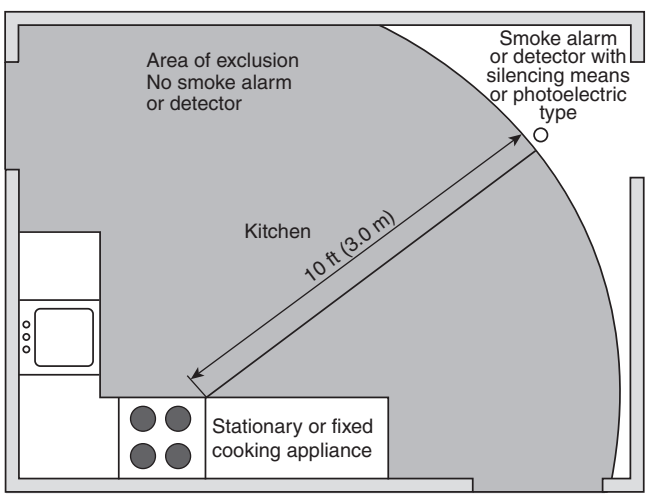

FIGURE A.29.11.3.4(4)(a) *Example of Zone of Exclusion (gray area) Within Typical Residential Kitchen.*

If other areas of this code require that a smoke alarm or smoke detector be placed within a horizontal flow path distance between 10 ft (3.0 m) and 20 ft (6.1 m) from a stationary or fixed cooking appliance, the following method should be used to determine the distance, and only photoelectric detection or smoke alarms/detectors with alarm silencing means can be installed in this area.

To install a smoke alarm or detector between 10 ft (3.0 m) and 20 ft (6.1 m) from the cooking appliance, an installer must first determine the 10 ft (3.0 m) area of exclusion. Once the area of exclusion is determined, an installer must then determine the horizontal flow distance. This is the horizontal distance along the ceiling from the closest edge of the cooking

appliance to the smoke alarm or detector. The horizontal distance can consist of line segments due to impediments, such as interior partitions. Once an impediment is met, the measurement of the distance will then continue along the new horizontal path segment until the distance requirement is met or another impediment is encountered. Figure A.29.11.3.4(4)(b) provides an example for placement outside a kitchen in a nearby hallway. Figure A.29.11.3.4(4)(c) provides another example of appropriate placement outside of a kitchen in an adjacent room.

At a horizontal flow path distance of greater than 20 ft (6.1 m), any type of smoke alarm or smoke detector can be installed.

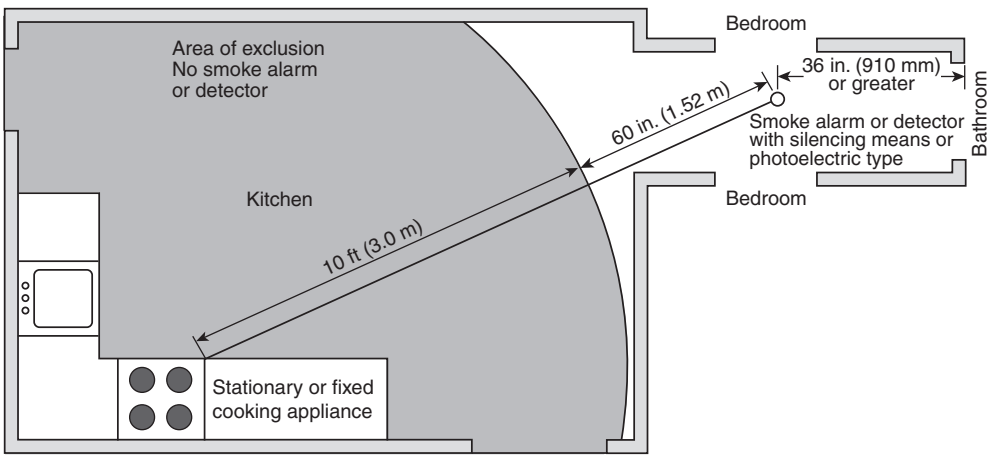

FIGURE A.29.11.3.4(4)(b) *Example of Smoke Alarm or Smoke Detector Placement Between 10 ft (3.0 m) and 20 ft (6.1 m) Away in Hallway from Center of Stationary or Fixed Cooking Appliance.*

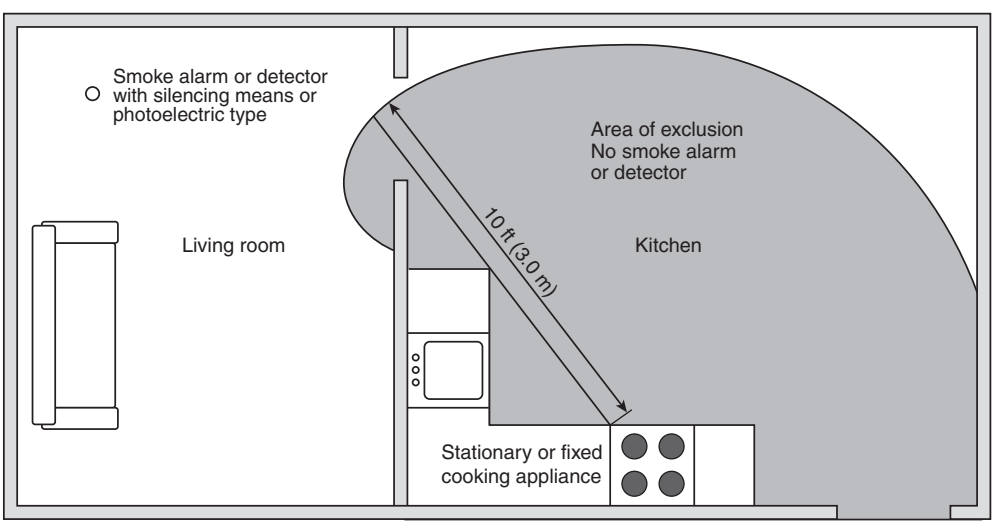

FIGURE A.29.11.3.4(4)(c) *Example of Smoke Alarm or Smoke Detector Placement Between 10 ft (3.0 m) and 20 ft (6.1 m) Away in Hallway from Center of Stationary or Fixed Cooking Appliance.*

In rare cases, a residential dwelling can be of such size and configuration that an area of exclusion of 10 ft (3.0 m) from a stationary or fixed cooking appliance excludes the placement of a smoke alarm or smoke detector required by other areas of this Code. In these cases, a smoke alarm or smoke detector using photoelectric detection can be installed at least 72 in. (1.83 m) from the fixed or stationary cooking appliance. Figure A.29.11.3.4(4)(d) provides an example of this situation in practice where a smoke alarm or smoke detector is required outside of the sleeping area, but the space is in close proximity to the kitchen space.

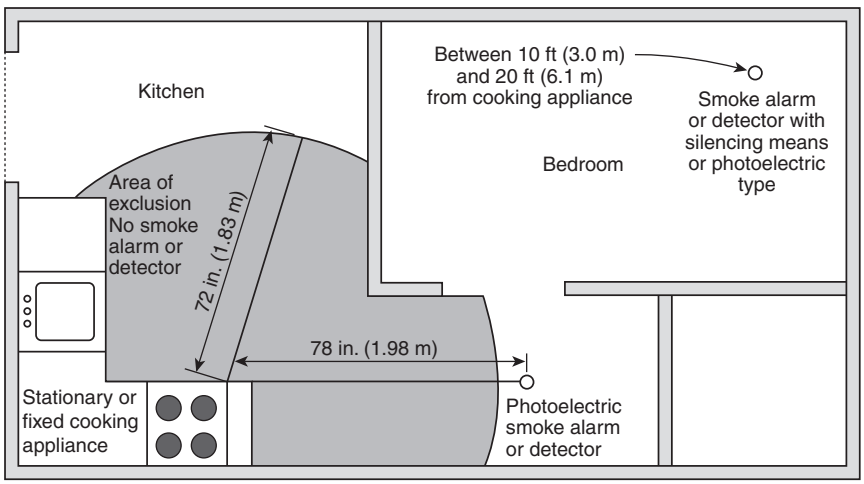

FIGURE A.29.11.3.4(4)(d) *Example of Exception Placement of Photoelectric Smoke Alarm or Smoke Detector at 72 in. (1.83 m) from Stationary or Fixed Cooking Appliance.*

A.29.11.3.4(7) Studies indicate that smoke alarms and smoke detectors that use ionization detection, photoelectric detection, or a combination of ionization and photoelectric detection, are susceptible to nuisance alarms caused by steam. Little research has been done on the comparative response of these types of detection to steam. Steam particles, in general, are visible, reflect light easily, and are typically produced in a size range that would be more likely to actuate a photoelectric sensor. Thus, it is required that smoke alarms and smoke detectors be installed greater than 36 in. (910 mm) from the bathroom door where possible. Increasing the distance between the smoke alarm or smoke detector and the bathroom door can reduce the frequency of nuisance alarms from bathroom steam. Frequent nuisance alarms can result in the occupant disabling the smoke alarm. Each incremental increase in separation, up to 10 ft (3.0 m), between the bathroom door and the smoke alarm or smoke detector is expected to reduce the frequency of nuisance alarms.

N **A.29.11.3.4(9)** There are circumstances in which the placement of smoke alarms and detectors cannot physically meet the requirement to be 36 in. (910 mm) or further away from the tip of the fan blade. Consequently, there is an irreconcilable conflict in enforcing all siting requirements of this standard, so the requirement of 29.11.3.4(10) only applies where possible to allow compliance with this standard. A limited study (Gottuk and Gottuk 2015) has indicated that placing alarms closer than 36 in. (910 mm) is not expected to produce an unacceptable risk, and in some cases, could improve performance.

A.29.11.3.4(12) Figure A.29.11.3.4(12) illustrates acceptable smoke alarm or smoke detector mounting locations for tray-shaped ceilings.

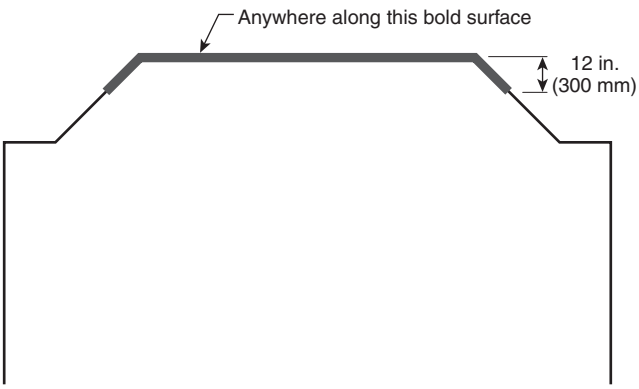

FIGURE A.29.11.3.4(12) *Locations Permitted for Smoke Alarms and Smoke Detectors on Tray-Shaped Ceilings.*

29.11.4* Heat Detectors and Heat Alarms.

A.29.11.4 While Chapter 29 does not require heat alarms or heat detectors as part of the basic protection scheme, it is recommended that the householder consider the use and placement of additional heat detectors for the same reasons presented under A.29.11.3. For example, additional heat alarms or heat detectors could be considered, but not limited to, the following areas: kitchen, dining room, attic (finished or unfinished), furnace room, utility room, basement, and integral or attached garage.

The placement of the heat alarm or heat detector is critical where maximum speed of fire detection is desired. Thus, a logical location for a heat alarm or heat detector is the center of the ceiling. At this location, the heat alarm or heat detector is closest to all areas of the room.

29.11.4.1* On smooth ceilings, heat detectors and heat alarms shall be installed within the strict limitations of their listed spacing.

A.29.11.4.1 *Heat Alarm or Heat Detector Mounting — Dead Air Space.* Heat from a fire rises to the ceiling, spreads out across the ceiling surface, and begins to bank down from the ceiling. The corner where the ceiling and the wall meet is an air space into which heat has difficulty penetrating. In most fires, this dead air space measures about 4 in. (100 mm) along the ceiling from the corner and about 4 in. (100 mm) down the wall as shown in Figure A.17.6.3.1.3.1. Heat alarm or heat detectors should not be placed in this dead air space.

Δ **29.11.4.2*** For sloped ceilings having a rise greater than 1 ft in 8 ft (1 m in 8 m) horizontally, the detector or alarm shall be located within 36 in. (910 mm) of the peak.

A.29.11.4.2 Figure A.29.11.3.2 illustrates acceptable heat alarm or heat detector mounting locations for sloped ceilings.

N **29.11.4.3** The spacing of additional detectors or alarms, if any, shall be based on a horizontal distance measurement, not on a measurement along the slope of the ceiling.

29.11.4.4* Heat detectors or alarms shall be mounted on the ceiling at least 4 in. (100 mm) from a wall or on a wall with the top of the detector or alarm not less than 4 in. (100 mm), nor more than 12 in. (300 mm), below the ceiling.

A.29.11.4.4 *Spacing of Detectors.* Where a room is too large for protection by a single heat alarm or heat detector, multiple alarms or detectors should be used. It is important that they be properly located so all parts of the room are covered. *(For further information on the spacing of detectors, see Chapter 17.)*

Where the Distance Between Detectors Should Be Further Reduced. The distance between detectors is based on data obtained from the spread of heat across a smooth ceiling. Where the ceiling is not smooth, the placement of the heat alarm or heat detector should be tailored to the situation.

Figure A.17.6.3.1.3.1 illustrates acceptable heat alarms or heat detector mounting locations for smooth ceilings and sidewalls.

N **29.11.4.5** Where the mounting surface could become considerably warmer or cooler than the room, such as a poorly insulated ceiling below an unfinished attic or an exterior wall, the detectors or alarms shall be mounted on an inside wall.

29.11.4.6 In rooms with open joists or beams, all ceiling-mounted detectors or alarms shall be located on the bottom of such joists or beams.

29.11.4.7* Detectors or alarms installed on an open-joisted ceiling shall have their smooth ceiling spacing reduced where this spacing is measured at right angles to solid joists; in the case of heat detectors or heat alarms, this spacing shall not exceed one-half of the listed spacing.

A.29.11.4.7 Refer to Figure A.29.11.4.7, where the distance between heat alarms or heat detectors should be further reduced.

For instance, with open wood joists, heat travels freely down the joist channels so that the maximum distance between the heat alarm or heat detectors [(50 ft) 15.2 m] can be used. However, heat has trouble spreading across the joists, so the distance in this direction should be one-half the distance allowed between detectors, as shown in Figure A.29.11.4.7, and the distance to the wall is reduced to 12.5 ft (3.8 m). Since one-half of 50 ft (15.2 m) is 25 ft (7.6 m), the distance between heat alarms or detectors across open wood joists should not exceed 25 ft (7.6 m), as shown in Figure A.29.11.4.7, and the distance to the wall is reduced [one-half of 25 ft (7.6 m)] to 12.5 ft (3.8 m). Paragraph 29.11.4.6 requires that a heat alarm or heat detectors be mounted on the bottom of the joists and not up in joist channels.

Walls, partitions, doorways, ceiling beams, and open joists interrupt the normal flow of heat, thus creating new areas to be protected.

In addition to the special requirements for heat detectors installed on ceilings with exposed joists, reduced spacing also might be required due to other structural characteristics of the protected area, possible drafts, or other conditions that could affect heat alarm or detector operation.

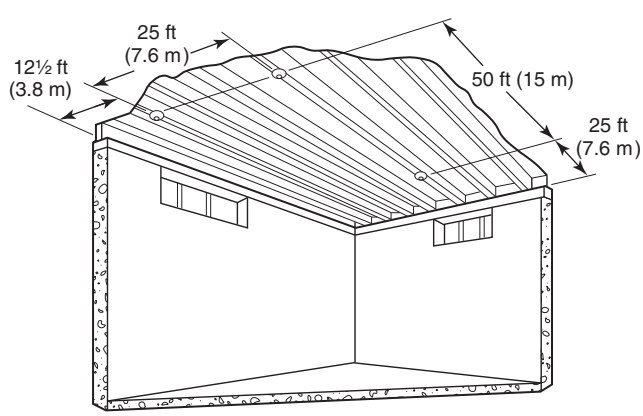

FIGURE A.29.11.4.7 *Open Joists, Attics, and Extra-High Ceilings are Some Areas that Require Special Knowledge for Installation.*

29.11.5 Wiring and Equipment. The installation of wiring and equipment shall be in accordance with the requirements of Article 760 of *NFPA 70*.

The installation of all alarm system wiring should take into account the alarm system manufacturer's published installation instructions and the limitations of the applicable product listings or approvals.

29.12 Optional Functions.

The following optional functions of fire-warning equipment shall be permitted:

(1) Notification of the fire department, either directly or through an alarm monitoring service
(2) Monitoring of other safety systems, such as fire sprinklers for alarm or proper operating conditions
(3) Notification of occupants or others of potentially dangerous conditions, such as the presence of fuel gases or toxic gases such as carbon monoxide
(4) Notification of occupants or others of the activation of intrusion (burglar alarm) sensors

Burglar alarm systems should be installed in accordance with NFPA 731, *Standard for the Installation of Electronic Premises Security Systems*. See 29.10.7.2, 29.10.7.6, and the associated commentary for more information on signal priorities.

(5) Any other function, safety related or not, that could share components or wiring

29.13 Inspection, Testing, and Maintenance.

NFPA 720

The testing and maintenance requirements for single- and multiple-station alarms and household alarm systems are in Chapter 14, Inspection, Testing, and Maintenance. Table 14.4.3.2, 14.4.5, 14.4.6 and 14.4.8 address this equipment. Note that Chapter 14 requires all alarm equipment to be tested per the manufacturer's published instructions to verify correct operation.

In accordance with 14.4.5, single- and multiple-station smoke alarms must be inspected and tested at least monthly and in accordance with the manufacturer's published instructions. Refer to the manufacturer's published instructions for CO alarms. While many manufacturers require monthly functional testing, some manufacturers require weekly testing, which would then be the required frequency.

Subsection 14.4.6 requires that household fire alarm systems be tested at least annually in accordance with Tables 14.3.1 and 14.4.3.2.

Subsection 14.4.8 addresses household CO detection systems and requires that the system be tested by a qualified service technician at least every 3 years per Table 14.4.3.2.

In one- and two-family dwellings, household fire alarm systems must be maintained and functionally tested per the manufacturer's published instructions [Table 14.4.3.2 and 14.4.6]. For smoke alarms in one- and two-family dwellings, *NFPA 72* does not specify requirements for sensitivity or smoke entry testing other than what may be specified in the manufacturer's instructions.

Chapter 14 has new language that states that the occupant of a dwelling unit is considered qualified to perform inspection, testing, and maintenance on a household alarm system that protects that dwelling unit when he or she has information and/or training from the manufacturer or a manufacturer's certified representative.

EXHIBIT 29.20

Smoke/Carbon Monoxide Alarm. (Source: Kidde Fire Safety, Mebane, NC)

Further clarification is provided in A.14.4.6.3, which states that "permanent occupants (whether renters or owners) of a dwelling unit should be provided with training and information sufficient to operate, inspect, test, and maintain their own household alarm system. The information should cover basic maintenance requirements, testing and troubleshooting procedures, and contact information for further support. It is not intended that occupants be trained to a level similar to a factory technician or to qualify them to redesign, program, or extend their systems."

FAQ Does the 10-year replacement requirement apply to all smoke alarms?

In accordance with 14.4.5.5 and 14.4.5.6, smoke alarms must be replaced when they fail to respond to operability tests or after 10 years from the date of manufacture. The manufacturer's published instructions for most smoke alarms state that they are to be replaced when they fail to respond to operability tests or after 10 years. In accordance with 14.4.5.7, CO alarms must be replaced when the end-of-life signal is actuated or the manufacturer's replacement date is reached. In accordance with 14.4.5.8, combination smoke/CO alarms must be replaced when the end-of-life signal actuates or 10 years from the date of manufacture, whichever comes first, unless otherwise provided by the manufacturer's published instructions. See Exhibit 29.20 for a typical smoke/CO alarm.

N **29.13.1** Fire and carbon monoxide alarm equipment shall be maintained and tested in accordance with the manufacturer's published instructions and per the requirements of 14.4.5 and 14.4.6.

N **29.13.2** All fire and carbon monoxide alarm equipment shall be restored to a normal condition after each alarm or test.

NFPA 720

29.14 Markings and Instructions.

29.14.1 Alarms. All alarms shall be plainly marked with the following information on the unit:

(1) Manufacturer's or listee's name, address, and model number
(2) A mark or certification that the unit has been listed
(3) Electrical rating (where applicable)
(4) Manufacturer's published operating and maintenance instructions
(5) Test instructions
(6) Replacement and service instructions
(7) Explanation of signal indicators, including identification of lights, switches, meters, and similar devices, regarding their function, unless their function is obvious
(8) Distinction between alarm and trouble signals on units employing both
(9) The sensitivity setting for an alarm having a fixed setting (For an alarm that is intended to be adjusted in the field, the range of sensitivity shall be indicated. The marked sensitivity shall be indicated as a percent per foot obscuration level. The marking shall include a nominal value plus tolerance.)
(10) Reference to an installation diagram and system owner's manual
(11) Date of manufacture in the format YEAR (in four digits), MONTH (in letters), and DAY (in two digits) located on the outside of the alarm

N **29.14.1.1** Where space limitations prohibit inclusion of 29.14.1(4) and 29.14.1(6), it shall be permitted to include this information in the installation instructions instead.

N **29.14.2 Carbon Monoxide Alarm and Detector Markings.** In addition to 29.14.1, carbon monoxide alarms or detectors shall be marked with the following information: NFPA 720

(1) Statement that indicates the unit is not suitable as a fire detector
(2) Electrical rating (if applicable)
(3) Warning that carbon monoxide is odorless, colorless, and tasteless
(4) Emergency actions to be taken
(5) Recommended replacement date

Δ **29.14.3 Household Alarm Control Unit.** Unless otherwise permitted by 29.14.4, all household alarm control units shall be plainly marked with the following information on the unit:

(1) Manufacturer's or listee's name, address, and model number
(2) A mark or certification that the unit has been listed
(3) Electrical rating (where applicable)
(4) Identification of all user interface components and their functions (such as, but not limited to, lights, switches, and meters) located adjacent to the component
(5) Manufacturer's published operating and maintenance instructions
(6) Test instructions
(7) Replacement and service instructions
(8) Reference to an installation wiring diagram and homeowner's manual, if not attached to control unit, by drawing number and issue number and/or date

N **29.14.4** Where space limitations prohibit inclusion of 29.14.3(5) and 29.14.3(7), it shall be permitted to include this information in the installation instructions instead.

N **29.14.5 Carbon Monoxide Instructions.** The following information shall be included in the instructions provided with carbon monoxide alarms and detectors: NFPA 720

(1) Installation instructions
(2) Operating instructions
(3) Testing instructions
(4) Maintenance instructions
(5) Replacement and service instructions
(6) Statement indicating that smoke might not be present during a carbon monoxide alarm condition
(7)* Information on the actions to be taken in case of an alarm
(8) Minimum and recommended distances from fuel-burning appliances

N **A.29.14.5(7)** Actions that should be considered include opening windows and doors and evacuation. Also, the information should provide examples of organizations to be contacted for assistance.

References Cited in Commentary

Ahrens, M., "U.S. Experience with Smoke Alarms and Other Fire Alarms," National Fire Protection Association, Quincy, MA, 2007.

ANSI/ASA S3.41, *American National Standard Audible Emergency Evacuation (E2) and Evacuation Signals with Relocation Instructions (ESRI),* 1990, reaffirmed 2015, American National Standards Institute, Inc., New York, NY.

ANSI/UL 217, *Standard for Single and Multiple Station Smoke Alarms,* 8th edition, revised 2016, American National Standards Institute, Inc., New York, NY.

ANSI/UL 268, *Standard for Smoke Detectors for Fire Alarm Systems*, 7th edition, 2016, American National Standards Institute, Inc., New York, NY.

ANSI/UL 539, *Standard for Single and Multiple Station Heat Alarms*, 7th edition, revised 2017, American National Standards Institute, Inc., New York, NY.

ANSI/UL 2034, *Standard for Single and Multiple Station Carbon Monoxide Alarms*, February 2008, revised February 2009, American National Standards Institute, Inc., New York, NY.

ANSI/UL 985, *Standard for Household Fire Warning System Units*, 6th edition, 2015, American National Standards Institute, Inc., New York, NY.

ANSI/UL 2075, *Standard for Gas and Vapor Detectors and Sensors*, 2nd edition, March 2013, American National Standards Institute, Inc., New York, NY.

Ashley, E. M., and Du Bois, J., "Waking Effectiveness of Audible, Visual, and Vibratory Emergency Alarms Across All Hearing Levels," 9th Fire Suppression and Detection Research Application Symposium, Fire Protection Research Foundation, Orlando, FL, January 21–23, 2004.

Bruck, D., "Non-Awakening in Children in Response to a Smoke Detector Alarm," *Fire Safety Journal*, 32, 1999, pp. 369–376.

Bruck, D., "The Who, What, Where and Why of Waking to Fire Alarms: A Review," *Fire Safety Journal*, 36, 2001, pp. 623–639.

Bruck, D., "Sleep and Fire: Who Is at Risk and Can the Risk Be Reduced?" *Fire Safety Science — Proceedings of the Eighth International Symposium*, D. T. Gottuk and B. Y. Lattimer, eds., International Association for Fire Safety Science, Worcester, MA, September 18–23, 2005, pp. 37–51.

Bruck, D., and Bliss, R. A., "Sleeping Children and Smoke Alarms," *Proceedings of the Fourth Asia-Oceania Symposium on Fire Science and Technology,* T. Yamada, ed., co-organized by Asia-Oceania Association for Fire Science and Technology (AOAFST) and Japan Association for Fire Science and Engineering (JAFSE), May 24–26, 2000, pp. 603–611.

Bruck, D., and Thomas, I., "Towards a Better Smoke Alarm Signal — An Evidence Based Approach," *Fire Safety Science — Proceedings of the Ninth International Symposium*, International Association of Fire Safety Science, Worcester, MA, 2008.

Duncan, C., "The Effectiveness of the Domestic Smoke Alarm Signal," Fire Engineering Research Report 99/5, University of Canterbury, Christchurch, New Zealand, March, 1999.

Lee, A., "The Audibility of Smoke Alarms in Residential Homes," CPSC-ES-0503, U.S. Consumer Product Safety Commission, Washington, DC, 2005. Available online at www.cpsc.gov/library/foia/foia05/os/audibility.pdf. https://www.cpsc.gov/s3fs-public/audibility%20%281%29.pdf

NFPA 70®, *National Electrical Code®*, 2017 edition, National Fire Protection Association, Quincy, MA.

NFPA *101®*, Life Safety Code®, 2018 edition, National Fire Protection Association, Quincy, MA.

NFPA 720, *Standard for the Installation of Carbon Monoxide (CO) Detection and Warning Equipment* (withdrawn), National Fire Protection Association, Quincy, MA.

NFPA 731, *Standard for the Installation of Electronic Premises Security Systems*, 2017 edition, National Fire Protection Association, Quincy, MA.

Thomas, I., and Bruck, D., "Strobe Lights, Pillow Shakers and Bed Shakers as Smoke Alarm Signals," *Fire Safety Science — Proceedings of the Ninth International Symposium*, International Association of Fire Safety Science, Worcester, MA, 2008.

Explanatory Material

ANNEX

A

The material contained in Annex A of *NFPA 72®*, *National Fire Alarm and Signaling Code®*, is included within the text of this handbook and, therefore, is not repeated here.

Engineering Guide for Automatic Fire Detector Spacing

ANNEX

B

This annex is not a part of the requirements of this NFPA document but is included for informational purposes only.

Users of Annex B should refer back to the text of NFPA 72 to familiarize themselves with the limitations of the design methods summarized herein.

Section B.2, and particularly B.2.2 and B.2.3, are largely based on the work of Custer and Meacham as found in "Performance-Based Fire Safety Engineering: An Introduction of Basic Concepts" (Meacham and Custer 1995) and Introduction to Performance-Based Fire Safety (Custer and Meacham 1997). [25]

The National Fire Protection Association and the Technical Committee on Initiating Devices for Fire Alarm Systems gratefully acknowledge the technical contributions of the Society of Fire Protection Engineers, Richard Custer, and Brian Meacham to performance-based design and this annex.

B.1 Introduction.

B.1.1 Scope. Annex B provides information intended to supplement Chapter 17. It includes a procedure for determining detector spacing based on the objectives set for the system, size, and rate of growth of fire to be detected, various ceiling heights, ambient temperatures, and response characteristics of the detectors. In addition to providing an engineering method for the design of detection systems using plume-dependent detectors, heat detectors, and smoke detectors, this annex also provides guidance on the use of radiant energy–sensing detectors.

Performance-based designs of fire alarm systems very likely will be deemed engineering work that requires the involvement of a professional engineer. The knowledge and qualifications of individuals using this annex is addressed in B.1.3.3.

System Design Tip

B.1.2 General.

B.1.2.1 In the 1999 edition Annex B was revised in its entirety from previous editions. The correlations originally used to develop the tables and graphs for heat and smoke detector spacings in the earlier editions have been updated to be consistent with current research. These revisions correct the errors in the original correlations. In earlier editions, the tables and graphs were based on an assumed heat of combustion of 20,900 kJ/kg (8986 Btu/lb). The effective heat of combustion for common cellulosic materials is usually taken to be approximately 12,500 kJ/kg (5374 Btu/lb). The equations in this annex were produced using test data and data correlations for cellulosic (wood) fuels that have a total heat of combustion of about 12,500 kJ/kg (5374 Btu/lb).

For the technical basis for this change, see Reference 11 in B.6.5.

B.1.2.2 In addition to the revisions undertaken in 1999, the concept of performance-based design was further expanded on. This included, to a large extent, additional material taken from the work of Custer and Meacham [25]. Since this time, the industry continues to develop additional codes, standards, and guides to further assist in undertaking a performance-based assessment. This includes the work of SFPE [40, 49], NFPA [50, 51, 52], and ICC [53].

System Design Tip

The referenced documents assist the designer in undertaking a performance-based assessment.

B.1.2.3 For the purposes of this annex, the heat produced by a fire is manifested either as convective heat or radiant heat. It is assumed that conductive heat transfer is of little consequence during the early stages of the development of a fire, where this annex is relevant. A convective heat release rate fraction equal to 75 percent of the total heat release rate has been used in this annex. Users should refer to references 12 and 13 in I.1.2.18 for fuels or burning conditions that are substantially different from these conditions.

B.1.2.4 The design methods for plume-dependent fire detectors provided in this annex are based on full-scale fire tests funded by the Fire Detection Institute in which all fires were geometrically growing flaming fires. *(See Environments of Fire Detectors — Phase 1: Effect of Fire Size, Ceiling Height and Material; Measurements Vol. I and Analysis Vol. II [10].)*

B.1.2.5 The guidance applicable to smoke detectors is limited to a theoretical analysis based on the flaming fire test data and is not intended to address the detection of smoldering fires.

System Design Tip

The design methods in Annex B rely on the presence of a buoyant plume. The heat released from a flaming fire produces a rising plume of hot gases. A smoldering fire has a very low rate of heat release and essentially little or no buoyant plume. For a smoldering scenario, the ambient air currents and diffusion processes provide the mechanisms for smoke movement. The smoldering condition can be significantly affected by the ambient air flows, and reliable methods for engineering analysis do not currently exist. Consequently, a designer cannot use the design methods in Annex B to evaluate detection for smoldering scenarios.

B.1.2.6 The design methods for plume-dependent fire detectors do not address the detection of steady-state fires.

B.1.2.7 The design methods for plume-dependent fire detectors used in this annex are only applicable when employed in the context of applications where the ceiling is smooth and level. They cannot be used for ceilings where there are beams, joists, or bays formed by beams and purlins. The research upon which the following methods have been based did not consider the effect of beams, joists, and bays in sufficient detail to justify the use of this annex to those applications.

B.1.3 Purpose.

Δ **B.1.3.1** The purpose of Annex B is to provide a performance basis for the location and spacing of fire detection–initiating devices. The sections for heat and smoke detectors provide an alternative design method to the prescriptive approach presented in Chapter 17 (i.e., based on their listed spacings). The section on radiant energy–sensing detectors elaborates on the performance-based criteria already existing in Chapter 17. A performance-based approach allows one to consider potential fire growth rates and fire signatures, the individual compartment characteristics, and damageability characteristics of the targets (e.g., occupants, equipment, contents, structures, and so on) in order to determine the location of a specific type of detector to meet the objectives established for the system.

B.1.3.2 Under the prescriptive approach, heat detectors are installed according to their listed spacing. The listed spacing is determined in a full-scale fire test room. The fire test room used for the determination of listed spacing for heat detectors has a ceiling height of 4.8 m (15 ft 9 in.). A steady-state, flammable liquid fire with a heat release rate of approximately 1137 kW (1200 Btu/sec), located 0.9 m (3 ft) above the floor, is used as the test fire. Special 71°C (160°F) test sprinklers are installed on a 3 m × 3 m (10 ft × 10 ft) spacing array such that the fire is in the center of the sprinkler array. The heat detectors being tested are installed in a square array with increasing spacing centered about the fire location. The elevation of the test fire is adjusted during the test to produce the temperature versus time curve at the test sprinkler heads to yield actuation of the heads in 2.0 minutes ±10 seconds. The largest heat detector spacing that achieves alarm before the actuation of the sprinkler heads in the test becomes the listed spacing for the heat detector. See Figure A.17.6.3.1.1(c). If the room dimensions, ambient conditions, and fire and response characteristics of the detector are different from above, the response of the heat detector must be expected to be different as well. Therefore, the use of an installed detector spacing that is different from the listed spacing might be warranted through the use of a performance-based approach if the conditions are as follows:

(1) The design objectives are different from designing a system that operates at the same time as a sprinkler in the approval test.
(2) Faster response of the device is desired.
(3) A response of the device to a smaller fire than used in the approved test is required.
(4) Accommodation to room geometry that is different from that used in the listing process.
(5) Other special considerations, such as ambient temperature, air movement, ceiling height, or other obstruction, are different from or are not considered in the approval tests.
(6) A fire other than a steady state 1137 kW (1200 Btu/sec) fire is contemplated.

B.1.3.3 The designer of fire alarm systems needs to be knowledgeable in the applicable areas associated with undertaking a performance-based design, including fire dynamics, performance-based design, detector response, and so forth, and apply these principles judiciously. In addition, the majority of jurisdictions consider the design of fire alarm systems as "engineering work." They therefore require licensed engineers to perform such work. Other jurisdictions allow technologists to lay out fire alarm systems as long as they follow the appropriate prescriptive requirements. Designers who are using a performance-based design approach need to review the relevant engineering licensure laws in the jurisdictions in which they are practicing, as performance-based designs might very likely be deemed engineering and of the type that requires licensure of a professional engineer.

B.2 Performance-Based Approach to Designing and Analyzing Fire Detection Systems.

System Design Tip

Section B.2 is largely based on the concepts presented in "Performance-Based Fire Safety Engineering: An Introduction of Basic Concepts" [Meacham and Custer, 1995] and *Introduction to Performance-Based Fire Safety* [Custer and Meacham, 1997].

This annex should be used in the context of the performance-based design process. The process allows the designer to develop solutions that differ from the prescriptive approaches in the body of the Code. The process provides checks and balances and a document trail so the final decision can be traced back to its source. If the computational methods outlined in this annex are used outside the environment of the performance-based design process, the designer loses those checks and balances, and the decision trail can stray from its correct path. Designers should consider and review the references before undertaking a design project using this annex.

Δ **B.2.1 Overview.** Subsection B.2.1 provides an overview of a systematic approach to conducting a performance-based design or analysis of a fire detection system. The approach has been outlined by Custer and Meacham and the SFPE *Engineering Guide to Performance Based Fire Protection* [40] and is summarized below in the context of design and analysis of fire detection systems. *(Refer to Figure B.2.1.)* This approach has been divided into two phases: defining goals and objectives and system design and evaluation.

B.2.2 Phase 1 — Defining Goals and Objectives.

B.2.2.1 Define Scope of Project.

B.2.2.1.1 The initial step of this approach is to identify information relative to the overall scope of work on the project, including characteristics of the building, design intent, design and construction team organization, constraints on design and project schedule, proposed building construction and features, relevant hazards, how the building functions, occupant

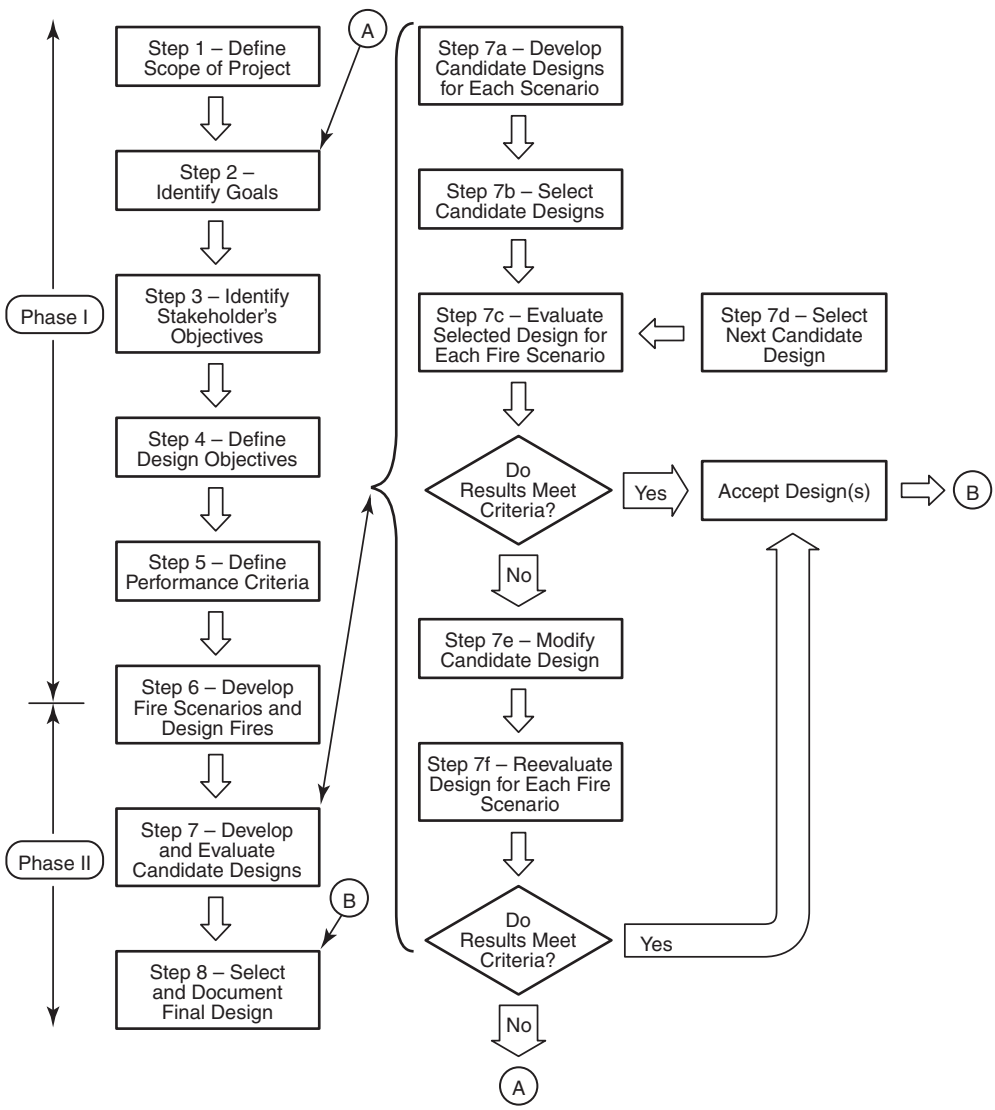

FIGURE B.2.1 *Overview of the Performance-Based Design Process. [25]*

characteristics, and so forth. Additional information that one might want to consider could also include characteristics of the fire departments, historic preservation, building management, and applicable regulations.

B.2.2.1.2 While defining the project's scope, the designer will identify which of the three situations in Table B.2.2.1.2 best describes the project at hand (i.e., a performance-based analysis of an existing detection system in an existing building).

TABLE B.2.2.1.2 *Design/Analysis Situation*

Building Type	*System Type*	*Design/Analysis*
New	New	Design
Existing	New	Design
Existing	Existing	Analysis

B.2.2.2 Identify Goals.

B.2.2.2.1 Fire protection assets are acquired in order to attain one or more of the following four goals:

(1) To provide life safety (occupants, employees, fire fighters, and so forth)
(2) To protect property and heritage (structure, contents, and so forth)
(3) To provide for continuity of operations (protect stakeholder's mission, operating capability, and so forth)
(4) To limit the environmental impact of fire (toxic products, fire-fighting water run-off, and so forth)

B.2.2.2.2 Fire protection goals are like other goals in that they are generally easy to agree on, are qualitative, and are noncontroversial in nature. They express the desired overall outcome to be achieved, that is, to provide life safety to the building occupants.

The design team might also identify other goals that do not relate directly to fire safety. Often, design goals reflect the use of the space and are characterized as mission continuity, property protection, environmental protection, and so on. These goals might include specific design objectives such as having a large open space that has no compartmentation, minimizing damage to the building's historic fabric, and reducing costs. The design team should consider these and other appropriate design parameters at the start of a project.

B.2.2.2.3 When starting the performance-based process, the various parties — including the stakeholders (i.e., the architect, building owner, insurance carrier, building or fire officials, and so forth), the authority having jurisdiction, and the design engineer — work together to prioritize the basic fire protection goals. Prioritizing is based on the stakeholder's objective and the building and occupancy involved. For example, life safety is a high priority in a hospital or stadium, while property protection might have an equally high priority in a large warehouse or historic building.

The performance-based design process creates a design environment in which all stakeholders that have an interest in the finished system have a say in the decision-making process. The list of stakeholders varies from project to project. Sometimes the stakeholders are few, and other times they are many. Potential stakeholders include the following:

1. Building managers
2. Design team members

3. Authorities having jurisdiction
4. Tenants
5. Neighbors
6. Accreditation agencies
7. Construction team members
8. Fire service

B.2.2.3 Identify Stakeholder's Objectives.

B.2.2.3.1 Each stakeholder must explicitly state her or his objectives in terms of acceptable loss for the various goals previously stated.

B.2.2.3.2 Stakeholder objectives specify how much safety the stakeholder wants, needs, or can afford. "No loss of life within the room of origin" is a sample stakeholder objective or statement of the stakeholder's maximum acceptable loss.

System Design Tip

Designers should note that most buildings contain ignition sources and some type of fuel. The chance that a fire could occur always exists. Similarly, some probability always exists that a fire in an occupied building could result in injury or death, some degree of property damage, or interruption to business — or all three. The designer should ensure that the stakeholders understand that an entirely hazard-free or risk-free environment is impossible to achieve [Custer and Meacham, 1997]. Building codes and construction standards do *not* produce a risk-free built environment. Usually, the performance-based design process is used to achieve a level of fire safety equivalent to that achieved by the prescriptive codes or to achieve some elected design objective, such as those derived from mission continuity, property protection, and so forth.

B.2.2.3.3 The stakeholder's objectives are generally not stated in fire protection engineering terms.

See Table B.2.2.4.1(a) through Table B.2.2.4.1(c) for examples of stakeholder's objectives.

B.2.2.3.4 Note that in a performance-based code environment, the Code will most likely define a performance objective or stakeholder objective.

System Design Tip

Stakeholders should define their objectives as clearly as possible. The objectives derived from the prescriptive criteria in a building code are generally considered to be the objectives of the public. From the beginning of the design process, the designer should work with the stakeholders to develop a consensus on the objectives for the system. Some stakeholders could have stringent, difficult-to-achieve objectives. As consensus is developed, each stakeholder must agree to the consensus objectives for the system. Without early stakeholder consensus, the designer will have a far more difficult task developing quantitative engineering criteria with which to evaluate trial designs.

Furthermore, cost is always a factor. Some objectives are laudable but might result in excessively expensive design solutions. The stakeholders must be willing to address cost issues as they are developing objectives. Ideally, the process is one of give and take among the stakeholders as they reach consensus.

B.2.2.4 Define Design Objectives.

B.2.2.4.1 The stakeholder's objective must then be explicitly stated and quantified in fire protection engineering terms that describe how the objective will be achieved. This demands that the design objectives be expressed quantitatively. See Table B.2.2.4.1(a) through Table B.2.2.4.1(c).

TABLE B.2.2.4.1(a) *Defining Goals and Objectives — Life Safety*

Fire protection goal	Provide life safety
Stakeholder's objective	No loss of life within compartment of origin
Design objective	Maintain tenable conditions within the compartment of origin
Performance criteria	Maintain: Temperatures below *xx*°C (°F) Visibility above *yy* m (ft) CO concentration below *zz* ppm for *tt* minutes

TABLE B.2.2.4.1(b) *Defining Goals and Objectives — Property Protection*

Fire protection goal	Provide protection of property
Stakeholder's objective	No fire damage outside compartment of origin
Design objective	Limit the spread of flame to the compartment of origin
Performance criteria	Maintain upper layer temperature below *xx*°C (°F) and radiation level to the floor below *yy* kW/m^2 (Btu/sec·ft^2) to prevent flashover

TABLE B.2.2.4.1(c) *Defining Goals and Objectives — Continuity of Operations*

Fire protection goal	Provide continuity of operations
Stakeholder's objective	Prevent any interruption to business operations in excess of 2 hours
Design objective	Limit the temperature and the concentration of HCl to within acceptable levels for continued operation of the equipment
Performance criteria	Provide detection such that operation of a gaseous suppression system will maintain temperatures below *xx*°C (°F) and HCl levels below *yy* ppm

The designer uses the design objectives as a benchmark against which the predicted performance of a trial design is measured. Although stakeholder needs and concerns are expressed in broad terms, the designer expresses performance criteria in engineering terms. See also Custer and Meacham [1997].

System Design Tip

B.2.2.4.2 The design objective provides a description of how the stakeholder's objective will be achieved in general fire protection engineering terms prior to this description being quantified. The general objective is then reduced to explicit and quantitative fire protection engineering terms. The explicit fire protection engineering objectives provide a performance benchmark against which the predicted performance of a candidate design is evaluated.

The designer quantifies the design objectives in either deterministic or probabilistic terms. Deterministic methods consider all possible incident scenarios equally, regardless of how likely or unlikely a scenario might be. For example, the designer can translate the stakeholder objective of "no fire damage outside the compartment of origin" to "limiting the spread of flame to the compartment of origin." This translation of the stakeholder objective is a deterministic statement of the design objective. Probabilistic methods assign probabilities to incident scenarios, weighing the more likely ones higher than the less likely ones. The designer restates the stakeholder objective of "no fire damage outside the compartment of origin" as "limiting the probability of flame spreading to an adjacent compartment to a value that does not exceed a threshold value" [Custer and Meacham, 1997].

System Design Tip

B.2.2.5 Define Performance Criteria.

A performance criterion is a measurement that will be used as a go/no-go decision value. For example, if the objective is to achieve occupant evacuation before the loss of tenability, the designer must derive

System Design Tip

a quantitative measure of what constitutes tenability. Some have used the elevation of the upper smoke layer as a determinant of tenability and deemed a space untenable when the smoke layer descends to a level of 1.5 m (5 ft). That measurement can be used to assess performance. A fire model can be developed for the space and the time at which the upper layer reaches a 1.5 m (5 ft) elevation. An egress model can be used to determine how long it takes to evacuate all the occupants. The evacuation time is then compared to the smoke layer descent time to determine if all the occupants have been able to leave before the smoke layer produced the *untenable* condition. The identification and selection of performance criteria are, therefore, a critical part of the performance-based design process.

B.2.2.5.1 Once the design objective has been established, specific, quantitatively expressed criteria that indicate attainment of the performance objective are developed.

B.2.2.5.2 Performance criteria provide a yardstick or threshold values that can measure a potential design's success in meeting stakeholder objectives and their associated design objectives. [25]

When defining performance criteria, it is important to recognize that it is impossible to achieve a hazard-free or risk-free environment. Also, the cost associated with an incremental reduction in risk typically increases as the potential risk or hazard level decreases.

B.2.2.5.3 Quantification of the design objectives into performance criteria involves determination of the various fire-induced stresses that are a reflection of the stated loss objectives. Performance criteria can be expressed in various terms, including temperature, radiant flux, a rate of heat release, or concentration of a toxic or corrosive species that must not be exceeded.

Other performance criteria relating to occupants include visibility, clear layer height, smoke concentration, ignition levels of adjacent fuel packages, and smoke product and toxic product damage. However, objectives are often derived from mission continuity, property preservation, cultural preservation, or environmental protection that will yield different performance criteria. For example, a hotel might have a maximum area contaminated with smoke as a mission continuity performance criterion. Rooms cannot be rented if they smell of smoke. The performance criterion would then relate to the number of rooms that cannot be rented because of smoke contamination. See also Meacham and Custer [1995].

B.2.2.5.4 Once the design performance criteria are established, appropriate safety factors are applied to obtain the working design criteria. The working design criteria reflect the performance that must be achieved by the detection system. This performance level must allow appropriate actions to be undertaken (e.g., actuate suppression systems, occupants' egress, notify fire department, and so forth) to meet the objectives. An acceptable fire detection system design provides the detection of the fire sufficiently early in its development to permit the other fire protection systems to meet or exceed the relevant performance criteria established for those systems.

B.2.2.5.5 Throughout the process identified as Phase I and II, communication should be maintained with the authorities having jurisdiction (AHJs) to review and develop consensus on the approach being taken. It is recommended that this communication commence as early in the design process as possible. The AHJ should also be involved in the development of performance criteria. Often the acceptance of a performance-based design in lieu of a design based on a prescriptive approach relies on demonstrating equivalence. This is called the comparative method, where the designer demonstrates that the performance-based design responds at least as well as, if not better than, a system designed using a prescriptive approach.

Table B.2.2.4.1(a) through Table B.2.2.4.1(c) present sample goals, objectives, and performance criteria. See also Custer and Meacham [1997].

B.2.3 Phase II — System Design and Evaluation.

B.2.3.1 Develop Fire Scenarios.

B.2.3.1.1 General.

B.2.3.1.1.1 A fire scenario defines the development of a fire and the spread of combustion products throughout a compartment or building. A fire scenario represents a set of fire conditions that are deemed a threat to a building and its occupants and/or contents, and, therefore, should be addressed in the design of the fire protection features of the structure. [25]

Fire scenarios are used to evaluate the performance of proposed designs. Consequently, prior agreement of all the stakeholders on how a proposed design will be evaluated is critical. This decision prevents the performance evaluation from changing as the design process moves forward. The fire scenario will be used to produce a model of the effects of fire in the building or compartment to be protected. The time at which the fire alarm system is predicted to respond to those fire effects is compared to the time needed to execute the planned response. Thus, the performance of the fire alarm system is evaluated in the context of a set of scenarios, which should be chosen and agreed upon by the stakeholders as representing reasonable worst-case situations.

B.2.3.1.1.2 The process of developing a fire scenario is a combination of hazard analysis and risk analysis. The hazard analysis identifies potential ignition sources, fuels, and fire development. Risk is the probability of occurrence multiplied by the consequences of that occurrence. The risk analysis looks at the impact of the fire to the surroundings or target items.

B.2.3.1.1.3 The fire scenario should include a description of various conditions, including building characteristics, occupant characteristics, and fire characteristics. [25, 40]

B.2.3.1.2 Building Characteristics. Building characteristics include the following:

(1) Configuration (area; ceiling height; ceiling configuration, such as flat, sloped beams; windows and doors, and thermodynamic properties)
(2) Environment (ambient temperature, humidity, background noise, and so forth)
(3) Equipment (heat-producing equipment, HVAC, manufacturing equipment, and so forth)
(4) Functioning characteristics (occupied, during times, days, and so forth)
(5) Target locations
(6) Potential ignition sources
(7) Aesthetic or historic preservation considerations

(Note target items — that is, areas associated with stakeholder objectives — along the expected route of spread for flame, heat, or other combustion products.)

System Design Tip

Building characteristics encompass the physical layout, ambient environment, structural features, fire hazards, and target locations in a compartment. Each of these characteristics, which affect fire initiation and growth, the spread of the products of combustion, and occupant evacuation, must be addressed when developing a design fire scenario.

The designer should also consider additional building characteristics:

1. Potential ignition sources
2. Architectural details to be designed around (i.e., ornate ceilings)
3. Concealed, enclosed spaces or voids

B.2.3.1.3 Occupant Characteristics. Occupant characteristics include the following:

(1) Alertness (sleeping, awake, and so forth)
(2) Age
(3) Mobility
(4) Quantity and location within the building
(5) Sex
(6) Responsiveness
(7) Familiarity with the building
(8) Mental challenges

Human behavior plays a key role in life safety, as well as with the other fire safety goals. *(See SFPE Engineering Guide to Human Behavior in Fire.)* The possible actions that could be taken upon detecting a fire as well as how one reacts once they hear an alarm need to be considered. These actions can include alerting and rescuing other family members, gathering belongings, interpreting or verifying the message, shutting down processes. They should also include a look at how individuals respond on their own as well as in group situations.

Once these occupant characteristics and their behavior have been analyzed, one might also want to determine evacuation times. Numerous factors again need to be considered, including number of occupants, distribution throughout the building, pre-movement times, motivation, state of wakefulness, familiarity, capacity, and layout of the means of egress.

Due to the nature of human behavior, it is difficult to accurately quantify the movements and evacuation times of occupants from a building. Thus, particular attention should be given to assumptions and uncertainties assigned to these occupant characteristics.

B.2.3.1.4 Fire Characteristics.

B.2.3.1.4.1 Fire characteristics include the following:

(1) Ignition sources — temperature, energy, time, and area of contact with potential fuels
(2) Initial fuels
  (a) *State*. Fuels can come in various states (i.e., solid, liquid, or gas). Each state can have very different combustion characteristics (i.e., a solid block of wood versus wood shavings versus wood dust)
  (b) *Type and quantity of fuel*. A fire's development and duration depends also on what is burning. Cellulosic-based materials burn quite differently compared to plastics, or flammable liquids, in terms of producing different fire growth rates, heat release rates, and products of combustion.
  (c) *Fuel configuration*. The geometrical arrangement of the fuel can also influence the fire growth rate and heat release rate. A wood block will burn very differently from a wood crib, as there is more surface area and ventilation, and radiation feedback between the combustible materials is increased.
  (d) *Fuel location*. The location of the fuel (i.e., against wall, in corner, in open, against the ceiling) will influence the development of the fire. Fires in the corner of a room or against a wall will typically grow faster than a fire located in the center of a room.
  (e) *Heat release rate*. The rate at which heat is released depends on the fuel's heat of combustion, the mass loss rate, the combustion efficiency, and the amount of incident heat flux. The mass loss rate also directly relates to the production rate of smoke, toxic gases, and other products of combustion.
  (f) *Fire growth rate*. Fires grow at various rates that are dependent on type of fuel, configuration, and amount of ventilation. Some fires such as confined flammable liquid fires might not be growing fires as their burning area is fixed. These are referred to as steady state fires. The faster a fire develops, the faster the temperature rises, and the faster the products of combustion are produced.

(g) *Production rate of combustion products (smoke, CO, CO_2, etc.)*. As the characteristics of various fuels vary, so will the type of quantity of materials generated during combustion. Species production rates can be estimated with species yields, which are representative of the mass of species produced per mass of fuel loss.

(3) Secondary fuels — proximity to initial fuels; amount; distribution, ease of ignitibility *(see initial fuels)*; and extension potential (beyond compartment, structure, area, if outside)

Conduction, convection, radiation, or a combination of these can ignite secondary fuels. The designer must consider the issues itemized in B.2.3.1.4.1(2) when considering the participation of secondary fuels in a fire scenario. See also Custer and Meacham [1997].

System Design Tip

B.2.3.1.4.2 An example of a fire scenario in a computer room might be as follows.

The computer room is 9.1 m × 6 m (30 ft × 20 ft) and 2.8 m (8 ft) high. It is occupied 12 hours a day, 5 days a week. The occupants are mobile and familiar with the building. There are no fixed fire suppression systems protecting this location. The fire department is capable of responding to the scene in 6 minutes, and an additional 15 minutes for fire ground evolution is needed.

Overheating of a resistor leads to the ignition of a printed circuit board and interconnecting cabling. This leads to a fire that quickly extends up into the above-ceiling space containing power and communications cabling. The burning of this cabling produces large quantities of dense, acrid smoke and corrosive products of combustion that spread throughout the computer suite. This causes the loss of essential computer and telecommunications services for 2 months.

B.2.3.2 Develop Design Fires.

B.2.3.2.1 General.

B.2.3.2.1.1 The design fire is the fire the system is intended to detect. When specifying a design fire, the specifics regarding the ignition, growth, steady-state output (if appropriate), and decay of the fire are expressed quantitatively.

There are numerous analysis techniques available to identify fire scenarios. These can typically fall into one of two categories: probabilistic or deterministic.

Probabilistic approaches typically relate to the statistical likelihood that ignition will occur, and the resultant outcome if a fire does occur. Probabilistic approaches could use the following as sources of data:

(1) Fire statistics (ignition, first items ignited, and so on)
(2) Past history
(3) Hazard/failure analysis
(4) Failure modes and effects analysis (FMEA)
(5) Event trees
(6) Fault trees
(7) HAZOP studies
(8) Cause-consequence analysis

Deterministic approaches use analysis or engineering judgment that is based on chemistry, physics, or correlations based on experimental data.

The selection of the design fire scenario and the supporting analysis techniques should be appropriate to the premise or processes. Inappropriate scenario selection or analysis can result in conservative designs that are not economical or designs with unacceptably high risks.

Δ **B.2.3.2.1.2** Fire development varies depending on the combustion characteristics of the fuel or fuels involved, the physical configuration of the fuels, the availability of combustion air, and the influences due to the compartment. Once a stable flame is attained, most fires grow in an accelerating pattern *(see Figure B.2.3.2.3.5)*, reach a steady state characterized by a maximum heat release rate, and then enter into a decay period as the availability of either fuel or combustion air becomes limited. Fire growth and development are limited by factors such as quantity of fuel, arrangement of fuel, quantity of oxygen, and the effect of manual and automatic suppression systems.

For design fires with a smoldering period, very little data are available. The design engineer should, therefore, be careful in specifying the duration of this period. The fire growth rate of flaming fires is determined by a variety of factors, including the following:

(1) Type of fuel and ease of ignition
(2) Fuel configuration and orientation
(3) Location of secondary fuel packages
(4) Proximity of fire to walls and corners
(5) Ceiling height
(6) Ventilation

It is important to note when using heat release data that the fuel burning as well as the compartment in which it is burning need to be considered together. A couch can produce sufficient heat to cause flashover in a small compartment, whereas this same couch placed in a large compartment with high ceilings can cause a limited fire and never reach flashover.

Several sources for developing design fires should be reviewed, including *SFPE Handbook of Fire Protection Engineering* [41]; NFPA *101*; *NFPA 5000*; and *SFPE Engineering Guide to Performance Based Fire Protection* [40].

B.2.3.2.1.3 Designers might also need to consider fires that might be related to extreme events. These can either be fires used to trigger extreme events, or post-extreme-event-induced fires. If these are deemed credible, then designers should take these into consideration as design fires and also with respect to the overall reliability, redundancy, and robustness of the detection system to function during these types of events. [54]

B.2.3.2.2 Heat Release Rates.

B.2.3.2.2.1 Fires can be characterized by their rate of heat release, measured in terms of the number of kW (Btu/sec) of heat liberated. Typical maximum heat release rates (Q_m) for a number of different fuels and fuel configurations are provided in Table B.2.3.2.6.2(a) and Table B.2.3.2.6.2(c). The heat release rate of a fire can be described as a product of a heat release density and fire area using the following equation:

$$Q_m = qA \qquad \textbf{[B.2.3.2.2.1]}$$

where:

Q_m = maximum or peak heat release rate [kW (Btu/sec)]
q = heat release rate density per unit floor area [kW/m^2 (Btu/sec·ft^2)]
A = floor area of the fuel [m^2 (ft^2)]

B.2.3.2.2.2 The following example is provided: A particular hazard analysis is to be based on a fire scenario involving a 3.05 m × 3.05 m (10 ft × 10 ft) stack of wood pallets stored 1.5 m (5 ft) high. Approximately what peak heat release rate can be expected?

From Table B.2.3.2.6.2(a), the heat release rate density (q) for 1.5 m (5 ft) high wood pallets is approximately 3745 kW/m^2 (330 Btu/sec·ft^2).

The area is 3.05 m × 3.05 m (10 ft × 10 ft), or 9.29 m^2 (100 ft^2). Using equation B.1 to determine the heat release rate yields the following:

$$3745 \times 9.29 = 34{,}791 \text{ kW } (330 \times 100 = 33{,}000 \text{ Btu/sec})$$

As indicated in the Table B.2.3.2.6.2(a), this fire generally produces a medium to fast fire growth rate, reaching 1055 kW (1000 Btu/sec) in approximately 90 to 190 seconds.

B.2.3.2.3 Fire Growth Rate.

B.2.3.2.3.1 Fires can also be defined by their growth rate or the time (t_g) it takes for the fire to reach a given heat release rate. Previous research [16] has shown that most fires grow exponentially and can be expressed by what is termed the "power law fire growth model":

$$Q \cong t^p \qquad \textbf{[B.2.3.2.3.1]}$$

where:

Q = heat release rate (kW or Btu/sec)
t = time (seconds)
p = 2

The exponent, p, is specific to the assumed growth curve for the design fire. Because p is most often assumed to be 2, this relation is commonly known as the t-square (t^2) fire. In this case, the heat release rate quadruples every time the duration of the fire doubles. Few situations exist where p will take on a value other than 2. The use of other values of p is discussed in the commentary following B.3.3.4.

Since Q represents the heat release rate of the design fire, it can be expressed as dH/dt. Thus, the relation can be written as

$$\frac{dH}{dt} = \alpha t^2$$

where:

α = fire growth rate (See B.2.3.2.3.2.)

This relation can be integrated to calculate the total quantity of heat released, dH, over the time t_1 to t_2.

$$\int_{t_1}^{t_2} \frac{dH}{dt} = \frac{1}{3}\left[\alpha t^3\right]_{t_1}^{t_2}$$

$$dH = \frac{\alpha}{3}\left(t_2^3 - t_1^3\right)$$

Using the net heat of combustion for the fuel, which is expressed as the quantity of heat released per unit of mass consumed, the total quantity of fuel consumed can be determined.

B.2.3.2.3.2 In fire protection, fuel packages are often described as having a growth time (t_g). This is the time necessary after the ignition with a stable flame for the fuel package to attain a heat release rate of 1055 kW (1000 Btu/sec). The following equations describe the growth of design fires:

$$Q = \frac{1055}{t_g^2} t^2 \quad \text{(for SI units)} \qquad \textbf{[B.2.3.2.3.2a]}$$

or

$$Q = \frac{1000}{t_g^2} t^2 \quad \text{(for inch-pound units)} \qquad \textbf{[B.2.3.2.3.2b]}$$

and thus

$$Q = \alpha t^2 \qquad \textbf{[B.2.3.2.3.2c]}$$

where:

Q = heat release rate [kW or (Btu/sec)]

α = fire growth rate [$1055/t_g^2$ (kW/sec^2) or $1000/t_g^2$ (Btu/sec^3)]

t_g = fire growth time to reach 1055 kW (1000 Btu/sec) after established burning

t = time after established burning occurs (seconds)

B.2.3.2.3.3 Table B.2.3.2.6.2(a) and Table B.2.3.2.6.2(e) provide values for t_g, the time necessary to reach a heat release rate of 1055 kW (1000 Btu/sec), for a variety of materials in various configurations.

B.2.3.2.3.4 Test data from 40 furniture calorimeter tests, as indicated in Table B.2.3.2.6.2(e), have been used to independently verify the power law fire growth model, $Q = \alpha t^2$. [14] For reference, the table contains the test numbers used in the original NIST reports.

The virtual time of origin (t_v) is the time at which a stable flame had appeared and the fires began to obey the power law fire growth model. Prior to t_v, the fuels might have smoldered but did not burn vigorously with an open flame. The model curves are then predicted by the following equations:

$$Q = \alpha\left(t - t_v\right)^2 \qquad \textbf{[B.2.3.2.3.4a]}$$

and

$$Q = \left(\frac{1055}{t_g^2}\right)\left(t - t_v\right)^2 \quad \text{(for SI units)} \qquad \textbf{[B.2.3.2.3.4b]}$$

or

$$Q = \left(\frac{1000}{t_g^2}\right)\left(t - t_v\right)^2 \quad \text{(for inch-pound units)} \qquad \textbf{[B.2.3.2.3.4c]}$$

where:

Q = heat release rate [kW or (Btu/sec)]

α = fire growth rate [$1055/t_g^2$ (kW/sec^2) or $1000/t_g^2$ (Btu/sec^3)]

t_g = fire growth time to reach 1055 kW (1000 Btu/sec)

t = time after established burning occurs (seconds)

t_v = virtual time of origin (seconds)

B.2.3.2.3.5 Figure B.2.3.2.3.5 is an example of actual test data with a power law curve superimposed.

Δ **B.2.3.2.3.6** For purposes of this annex, fires are classified as being either slow-, medium-, or fast-developing from the time that established burning occurs until the fire reaches a heat release rate of 1055 kW (1000 Btu/sec). Table B.2.3.2.3.6 results from using B.2.3.2.3.2. *[See also Table B.2.3.2.6.2(a).]*

Δ ***TABLE B.2.3.2.3.6*** *Power Law Heat Release Rates*

Fire Growth Rate	***Growth Time (t_g)***	***α (kW/sec^2)***	***α (Btu/sec^3)***
Slow	$t_g \geq 400$ sec	$\alpha \leq 0.0066$	$\alpha \leq 0.0063$
Medium	$150 \leq t_g < 400$ sec	$0.0066 < \alpha \leq 0.0469$	$0.0063 < \alpha \leq 0.0445$
Fast	$t_g < 150$ sec	$\alpha > 0.0469$	$\alpha > 0.0445$

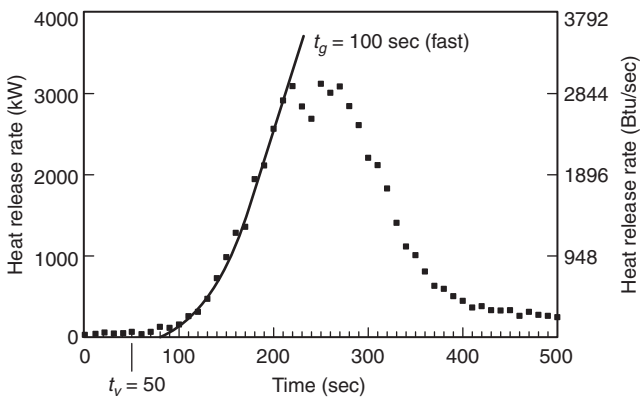

FIGURE B.2.3.2.3.5 *Test 38, Foam Sofa. (Courtesy of R. P. Schifiliti Associates, Inc.)*

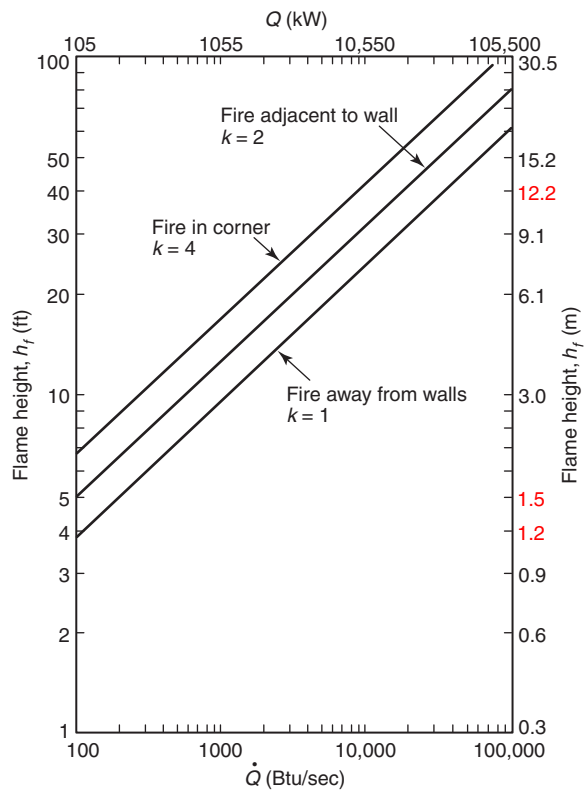

FIGURE B.2.3.2.4.1 *Heat Release Rate vs. Flame Height.*

B.2.3.2.4 Flame Height.

B.2.3.2.4.1 There are a number of flame height to heat release rate correlations available that can be used to determine an appropriate design fire. The differences in the various correlations arise from the different data sets and curve-fitting methods used by the researchers. One such correlation is shown in Figure B.2.3.2.4.1. It indicates that flame height and fire heat release rate are directly related. [2] The lines in Figure B.2.3.2.4.1 were derived from the following equation:

$$h_f = 0.182(kQ)^{2/5} \quad \text{(for SI units)} \qquad \textbf{[B.2.3.2.4.1a]}$$

or

$$h_f = 0.584(kQ)^{2/5} \quad \text{(for inch-pound units)} \qquad \textbf{[B.2.3.2.4.1b]}$$

where:

h_f = flame height (m or ft)
k = wall effect factor
Q = heat release rate (kW or Btu/sec)

Where there are no nearby walls, use $k = 1$.
Where the fuel package is near a wall, use $k = 2$.
Where the fuel package is in a corner, use $k = 4$.

Other flame height correlations are published. Each correlation will give the user slightly different results. However, the calculated flame height is an average height for diffusion flames. Typically, diffusion flames exhibit a great deal of variability in flame height due to flow turbulence.

The flame height correlation in B.2.3.2.4.1 is used extensively in this annex for the design of flame detection systems.

B.2.3.2.4.2 The following example is provided: What is the average flame height of a fire with a heat release rate of 1055 kW (1000 Btu/sec) located in the middle of a compartment?

From Figure B.2.3.2.4.1, find the heat release rate on the abscissa and read estimated flame height from the ordinate, or use equation B.2.3.2.4.1a or B.2.3.2.4.1b:

$$h_f = 0.182(kQ)^{2/5} \quad \text{(for SI units) or} \qquad \textbf{[B.2.3.2.4.2a]}$$

$$h_f = 0.584(kQ)^{2/5} \quad \text{(for inch-pound units)} \qquad \textbf{[B.2.3.2.4.2b]}$$

$$h_f = 0.182(1 \times 1055 \text{ kW})^{2/5} \text{ or} \qquad \textbf{[B.2.3.2.4.2c]}$$

$$h_f = 0.584(1 \times 1000 \text{ Btu/sec})^{2/5} \text{ or} \qquad \textbf{[B.2.3.2.4.2d]}$$

$$h_f = 2.8 \text{ m } (9.25 \text{ ft}) \qquad \textbf{[B.2.3.2.4.2e]}$$

Another correlation has been derived by Drysdale [42]:

$$I = 0.235\, Q_c^{2/5} - 1.02D \qquad \textbf{[B.2.3.2.4.2f]}$$

where:

I = the flame height (m)

Q_c = the convective heat release rate (kW)

D = the diameter of the fuel bed

These correlations will not produce the same prediction when used for exactly the same input data. There is inherent uncertainty in the calculated flame height due to the fact that the flaming combustion in the diffusion regime is a dynamic phenomenon. The designer should run multiple predictions with bounding values to address the inherent uncertainty of the correlations.

B.2.3.2.5 Selection of Critical Fire Size. Because all fire control means require a finite operation time, there is a critical difference between the time at which the fire must be detected and the time at which it achieves the magnitude of the design fire. Even though a fire has been detected, this does not mean that it stops growing. Fires typically grow exponentially until they become ventilation controlled, and limited by the availability of fuel, or until some type of fire suppression or extinguishment is commenced. Figure B.2.3.2.5 shows that there can be a significant increase in the heat release rate with only a small change in time due to the exponential growth rate of fire.

B.2.3.2.5.1 Once the design objectives and the design fire have been established, the designer will need to establish two points on the design fire curve: Q_{DO} and Q_{CR}.

B.2.3.2.5.2 Q_{DO} represents the heat release rate, or product release rate, which produces conditions representative of the design objective. This is the "design fire." However, Q_{DO} does not represent the point in time at which detection is needed. Detection must occur sufficiently early in the development of the fire to allow for any intrinsic reaction time of the detection as well as the operation time for fire suppression or extinguishing systems. There will be delays in both detection of the fire as well as the response of equipment, or persons, to the alarm.

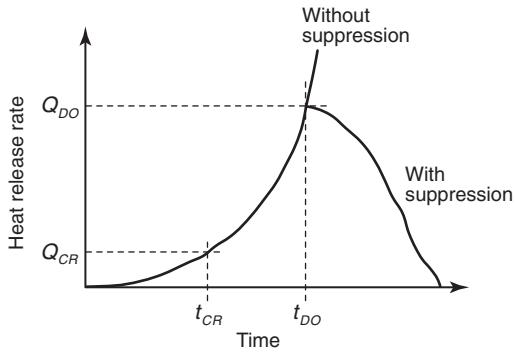

FIGURE B.2.3.2.5 *Critical and Design Objective Heat Release Rates vs. Time.*

B.2.3.2.5.3 A critical fire size (Q_{CR}) is identified on the curve that accounts for the delays in detection and response. This point represents the maximum permissible fire size at which detection must occur that allows appropriate actions to be taken to keep the fire from exceeding the design objective (Q_{DO}).

B.2.3.2.5.4 Delays are inherent in both the detection system as well as in the response of the equipment or people that need to react once a fire is detected. Delays associated with the detection system include a lag in the transport of combustion products from the fire to the detector and response time lag of the detector, alarm verification time, processing time of the detector, and processing time of the control unit. Delays are also possible with an automatic fire extinguishing system(s) or suppression system(s). Delay can be introduced by alarm verification or crossed zone detection systems, filling and discharge times of preaction systems, delays in agent release required for occupant evacuation (e.g., CO_2 systems), and the time required to achieve extinguishment.

B.2.3.2.5.5 Occupants do not always respond immediately to a fire alarm. The following must be accounted for when evaluating occupant safety issues:

(1) Time expected for occupants to hear the alarm (due to sleeping or manufacturing equipment noise)
(2) Time to decipher the message (e.g., voice alarm system)
(3) Time to decide whether to leave (get dressed, gather belongings, call security)
(4) Time to travel to an exit

B.2.3.2.5.6 Response of the fire department or fire brigade to a fire incident involves several different actions that need to occur sequentially before containment and extinguishment efforts of the fire can even begin. These actions should also be taken into account to properly design detection systems that meet the design objectives. These actions typically include the following:

(1) Detection (detector delays, control unit delays, and so forth)
(2) Notification to the monitoring station (remote, central station, proprietary, and so forth)
(3) Notification of the fire department
(4) Alarm handling time at the fire department
(5) Turnout time at the station
(6) Travel time to the incident
(7) Access to the site
(8) Set-up time on site
(9) Access to building

(10) Access to fire floor
(11) Access to area of involvement
(12) Application of extinguishant on the fire

B.2.3.2.5.7 Unless conditions that limit the availability of combustion air or fuel exist, neither the growth of the fire nor the resultant damage stop until fire suppression begins. The time needed to execute each step of the fire response sequence of actions must be quantified and documented. When designing a detection system, the sum of the time needed for each step in the response sequence (t_{delay}) must be subtracted from the time at which the fire attains the design objective (t_{DO}) in order to determine the latest time and fire size (Q_{CR}) in the fire development at which detection can occur and still achieve the system design objective.

B.2.3.2.5.8 The fire scenarios and design fires selected should include analysis of best and worst-case conditions and their likelihood of occurring. It is important to look at different conditions and situations and their effects on response.

B.2.3.2.6 Data Sources.

B.2.3.2.6.1 To produce a design fire curve, information is needed regarding the burning characteristics of the object(s) involved. Data can be obtained from either technical literature or by conducting small or large scale calorimeter tests.

B.2.3.2.6.2 Some information is contained in Figure B.2.3.2.6.2 and Table B.2.3.2.6.2(a) through Table B.2.3.2.6.2(e).

Δ ***TABLE B.2.3.2.6.2(a)*** *Maximum Heat Release Rates — Warehouse Materials*

Warehouse Materials	*Growth Time (t_g) (sec)*	*Heat Release Density (q)*		*Classification*
		kW/m²	*Btu/sec·ft²*	
1. Wood pallets, stack, 0.46 m (1 ½ ft) high (6%–12% moisture)	150–310	1,248	110	fast–medium
2. Wood pallets, stack, 1.52 m (5 ft) high (6%–12% moisture)	90–190	3,745	330	fast
3. Wood pallets, stack, 3.05 m (10 ft) high (6%–12% moisture)	80–110	6,810	600	fast
4. Wood pallets, stack, 4.88 m (16 ft) high (6%–12% moisture)	75–105	10,214	900	fast
5. Mail bags, filled, stored 1.52 m (5 ft) high	190	397	35	medium
6. Cartons, compartmented, stacked 4.57 m (15 ft) high	60	2,270	200	fast
7. Paper, vertical rolls, stacked 6.10 m (20 ft) high	15–28	—	—	*
8. Cotton (also PE, PE/cot, acrylic/nylon/PE), garments in 3.66 m (12 ft) high racks	20–42	—	—	*
9. Cartons on pallets, rack storage, 4.57 m–9.14 m (15 ft–30 ft) high	40–280	—	—	fast–medium
10. Paper products, densely packed in cartons, rack storage, 6.10 m (20 ft) high	470	—	—	slow
11. PE letter trays, filled, stacked 1.52 m (5 ft) high on cart	190	8,512	750	medium
12. PE trash barrels in cartons, stacked 4.57 m (15 ft) high	55	2,837	250	fast
13. FRP shower stalls in cartons, stacked 4.57 m (15 ft) high	85	1,248	110	fast
14. PE bottles, packed in item 6	85	6,242	550	fast
15. PE bottles in cartons, stacked 4.57 m (15 ft) high	75	1,929	170	fast
16. PE pallets, stacked 0.91 m (3 ft) high	130	—	—	fast
17. PE pallets, stacked 1.83 m–2.44 m (6 ft–8 ft) high	30–55	—	—	fast
18. PU mattress, single, horizontal	110	—	—	fast
19. PE insulation board, rigid foam, stacked 4.57 m (15 ft) high	8	1,929	170	*
20. PS jars, packed in item 6	55	13,619	1,200	fast

Δ ***TABLE B.2.3.2.6.2(a)*** *Continued*

Warehouse Materials	*Growth Time (t_g) (sec)*	*Heat Release Density (q)*		*Classification*
		kW/m²	*Btu/sec·ft²*	
21. PS tubs nested in cartons, stacked 4.27 m (14 ft) high	105	5,107	450	fast
22. PS toy parts in cartons, stacked 4.57 m (15 ft) high	110	2,042	180	fast
23. PS insulation board, rigid, stacked 4.27 m (14 ft) high	7	3,291	290	*
24. PVC bottles, packed in item 6	9	3,405	300	*
25. PP tubs, packed in item 6	10	4,426	390	*
26. PP and PE film in rolls, stacked 4.27 m (14 ft) high	40	3,972	350	*
27. Distilled spirits in barrels, stacked 6.10 m (20 ft) high	23–40	—	—	*
28. Methyl alcohol	—	738	65	—
29. Gasoline	—	2,270	200	—
30. Kerosene	—	2,270	200	—
31. Diesel oil	—	2,043	180	—

PE: Polyethylene. PS: Polystyrene. PVC: Polyvinyl chloride. PP: Polypropylene. PU: Polyurethane. FRP: Fiberglass-reinforced polyester.

Note: The heat release rates per unit floor area are for fully involved combustibles, assuming 100 percent combustion efficiency. The growth times shown are those required to exceed 1000 Btu/sec heat release rate for developing fires, assuming 100 percent combustion efficiency.

*Fire growth rate exceeds design data.

TABLE B.2.3.2.6.2(b) *Maximum Heat Release Rates from Fire Detection Institute Analysis*

Materials	*Approximate Values*	
	kW	*Btu/sec*
Medium wastebasket with milk cartons	105	100
Large barrel with milk cartons	148	140
Upholstered chair with polyurethane foam	369	350
Latex foam mattress (heat at room door)	1265	1200
Furnished living room (heat at open door)	4217–8435	4000–8000

TABLE B.2.3.2.6.2(c) *Unit Heat Release Rates for Fuels Burning in the Open*

Commodity	*Heat Release Rate*	
	kW	*Btu/sec*
Flammable liquid pool	3291/m²	290/ft² of surface
Flammable liquid spray	557/Lpm	2000/gpm of flow
Pallet stack	3459/m	1000/ft of height
Wood or PMMA* (vertical)		
0.6 m (2 ft) height	104/m	30/ft of width
1.8 m (6 ft) height	242/m	70/ft of width
2.4 m (8 ft) height	623/m	180/ft of width
3.7 m (12 ft) height	1038/m	300/ft of width
Wood or PMMA*		
Top of horizontal surface	715/m²	63/ft² of surface

(*continues*)

TABLE B.2.3.2.6.2(c) *Continued*

Commodity	*Heat Release Rate*	
	kW	*Btu/sec*
Solid polystyrene (vertical)		
0.6 m (2 ft) height	218/m	63/ft of width
1.8 m (6 ft) height	450/m	130/ft of width
2.4 m (8 ft) height	1384/m	400/ft of width
3.7 m (12 ft) height	2352/m	680/ft of width
Solid polystyrene (horizontal)	1362/m^2	120/ft^2 of surface
Solid polypropylene (vertical)		
0.6 m (2 ft) height	218/m	63/ft of width
1.8 m (6 ft) height	346/m	100/ft of width
2.4 m (8 ft) height	969/m	280/ft of width
3.7 m (12 ft) height	1626/m	470/ft of width
Solid polypropylene (horizontal)	795/m^2	70/ft^2 of surface

*Polymethyl methacrylate (Plexiglas™, Lucite™, Acrylic).

[**92B:** Table B.1, 1995.]

Δ ***TABLE B.2.3.2.6.2(d)*** *Characteristics of Ignition Sources*

	Typical Heat Output		*Burn Time*[a]	*Maximum Flame Height*		*Flame Width*		*Maximum Heat Flux*	
	W	*Btu/sec*	*(sec)*	*mm*	*in.*	*mm*	*in.*	*kW/m^2*	*Btu/sec · ft^2*
Cigarette 1.1 g (not puffed, laid on solid surface)									
Bone dry	5	0.0047	1200	—	—	—	—	42	3.7
Conditioned to 50% relative humidity	5	0.0047	1200	—	—	—	—	35	3.1
Methenamine pill, 0.15 g (0.0053 oz)	45	0.043	90	—	—	—	—	4	0.35
Match, wooden, laid on solid surface	80	0.076	20–30	30	1.18	14	0.092	18–20	1.59–1.76
Wood cribs, BS 5852 Part 2									
No. 4 crib, 8.5 g (0.3 oz)	1,000	0.95	190	—	—	—	—	15[d]	1.32
No. 5 crib, 17 g (0.6 oz)	1,900	1.80	200	—	—	—	—	17[d]	1.50
No. 6 crib, 60 g (2.1 oz)	2,600	2.46	190	—	—	—	—	20[d]	1.76
No. 7 crib, 126 g (4.4 oz)	6,400	6.07	350	—	—	—	—	25[d]	2.20
Crumpled brown lunch bag, 6 g (0.21 oz)	1,200	1.14	80	—	—	—	—	—	—
Crumpled wax paper, 4.5 g (0.16 oz) (tight)	1,800	1.71	25	—	—	—	—	—	—
Crumpled wax paper, 4.5 g (0.16 oz) (loose)	5,300	5.03	20	—	—	—	—	—	—
Folded double-sheet newspaper, 22 g (0.78 oz) (bottom ignition)	4,000	3.79	100	—	—	—	—	—	—
Crumpled double-sheet newspaper, 22 g (0.78 oz) (top ignition)	7,400	7.02	40	—	—	—	—	—	—
Crumpled double-sheet newspaper, 22 g (0.78 oz) (bottom ignition)	17,000	16.12	20	—	—	—	—	—	—

Δ ***TABLE B.2.3.2.6.2(d)*** *Continued*

	Typical Heat Output		Burn Time[a] (sec)	Maximum Flame Height		Flame Width		Maximum Heat Flux	
	W	Btu/sec		mm	in.	mm	in.	kW/m²	Btu/sec · ft²
Polyethylene wastebasket, 285 g (10.0 oz), filled with 12 milk cartons [390 g (13.8 oz)]	50,000	47.42	200[b]	550	21.7	200	7.9	35[c]	3.08
Plastic trash bags, filled with cellulosic trash [1.2–14 kg (42.3–493 oz)][e]	120,000–350,000	113.81–331.96	200[b]	—	—	—	—	—	—

Note: Based on Table B.5.3(b) of NFPA 92, 2012 edition.

[a]Time duration of significant flaming.

[b]Total burn time in excess of 1800 seconds.

[c]As measured on simulation burner.

[d]Measured from 25 mm away.

[e]Results vary greatly with packing density.

Δ ***TABLE B.2.3.2.6.2(e)*** *Furniture Heat Release Rates [3, 14, 16]*

Test No.	Item/Description/Mass	Growth Time (t_g) (sec)	Classification	Fuel Fire Intensity Coefficient (α)		Virtual Time (tv) (sec)	Maximum Heat Release Rates	
				kW/sec²	Btu/sec³		kW	Btu/sec
15	Metal wardrobe, 41.4 kg (91.3 lb) (total)	50	fast	0.4220	0.4002	10	750	711
18	Chair F33 (trial love seat), 29.2 kg (64.4 lb)	400	slow	0.0066	0.0063	140	950	901
19	Chair F21, 28.15 kg (62.01 lb) (initial)	175	medium	0.0344	0.0326	110	350	332
19	Chair F21, 28.15 kg (62.01 lb) (later)	50	fast	0.4220	0.4002	190	2000	1897
21	Metal wardrobe, 40.8 kg (90.0 lb) (total) (initial)	250	medium	0.0169	0.0160	10	250	237
21	Metal wardrobe, 40.8 kg (90.0 lb) (total) (average)	120	fast	0.0733	0.0695	60	250	237
21	Metal wardrobe, 40.8 kg (90.0 lb) (total) (later)	100	fast	0.1055	0.1001	30	140	133
22	Chair F24, 28.3 kg (62.4 lb)	350	medium	0.0086	0.0082	400	700	664
23	Chair F23, 31.2 kg (68.8 lb)	400	slow	0.0066	0.0063	100	700	664
24	Chair F22, 31.2 kg (68.8 lb)	2000	slow	0.0003	0.0003	150	300	285
25	Chair F26, 19.2 kg (42.3 lb)	200	medium	0.0264	0.0250	90	800	759
26	Chair F27, 29.0 kg (63.9 lb)	200	medium	0.0264	0.0250	360	900	854
27	Chair F29, 14.0 kg (30.9 lb)	100	fast	0.1055	0.1001	70	1850	1755
28	Chair F28, 29.2 kg (64.4 lb)	425	slow	0.0058	0.0055	90	700	664
29	Chair F25, 27.8 kg (61.3 lb) (later)	60	fast	0.2931	0.2780	175	700	664
29	Chair F25, 27.8 kg (61.3 lb) (initial)	100	fast	0.1055	0.1001	100	2000	1897
30	Chair F30, 25.2 kg (55.6 lb)	60	fast	0.2931	0.2780	70	950	901

(*continues*)

Δ ***TABLE B.2.3.2.6.2(e)*** *Continued*

Test No.	Item/Description/Mass	Growth Time (t_g) (sec)	Classification	Fuel Fire Intensity Coefficient (α)		Virtual Time (tv) (sec)	Maximum Heat Release Rates	
				kW/sec²	Btu/sec³		kW	Btu/sec
31	Chair F31 (love seat), 39.6 kg (87.3 lb)	60	fast	0.2931	0.2780	145	2600	2466
37	Chair F31 (love seat), 40.4 kg (89.1 lb)	80	fast	0.1648	0.1563	100	2750	2608
38	Chair F32 (sofa), 51.5 kg (113.5 lb)	100	fast	0.1055	0.1001	50	3000	2845
39	½ in. plywood wardrobe with fabrics, 68.5 kg (151.0 lb)	35	*	0.8612	0.8168	20	3250	3083
40	½ in. plywood wardrobe with fabrics, 68.32 kg (150.6 lb)	35	*	0.8612	0.8168	40	3500	3320
41	1⁄8 in. plywood wardrobe with fabrics, 36.0 kg (79.4 lb)	40	*	0.6594	0.6254	40	6000	5691
42	1⁄8 in. plywood wardrobe with fire-retardant interior finish (initial growth)	70	fast	0.2153	0.2042	50	2000	1897
42	1⁄8 in. plywood wardrobe with fire-retardant interior finish (later growth)	30	*	1.1722	1.1118	100	5000	4742
43	Repeat of ½ in. plywood wardrobe, 67.62 kg (149.08 lb)	30	*	1.1722	1.1118	50	3000	2845
44	1⁄8 in. plywood wardrobe with fire-retardant latex paint, 37.26 kg (82.14 lb)	90	fast	0.1302	0.1235	30	2900	2751
45	Chair F21, 28.34 kg (62.48 lb)	100	*	0.1055	0.1001	120	2100	1992
46	Chair F21, 28.34 kg (62.48 lb)	45	*	0.5210	0.4941	130	2600	2466
47	Chair, adj. back metal frame, foam cushions, 20.82 kg (45.90 lb)	170	medium	0.0365	0.0346	30	250	237
48	Easy chair CO7, 11.52 kg (25.40 lb)	175	medium	0.0344	0.0326	90	950	901
49	Easy chair F34, 15.68 kg (34.57 lb)	200	medium	0.0264	0.0250	50	200	190
50	Chair, metal frame, minimum cushion, 16.52 kg (36.42 lb)	200	medium	0.0264	0.0250	120	3000	2845
51	Chair, molded fiberglass, no cushion, 5.28 kg (11.64 lb)	120	fast	0.0733	0.0695	20	35	33
52	Molded plastic patient chair, 11.26 kg (24.82 lb)	275	medium	0.0140	0.0133	2090	700	664
53	Chair, metal frame, padded seat and back, 15.54 kg (34.26 lb)	350	medium	0.0086	0.0082	50	280	266
54	Love seat, metal frame, foam cushions, 27.26 kg (60.10 lb)	500	slow	0.0042	0.0040	210	300	285
56	Chair, wood frame, latex foam cushions, 11.2 kg (24.69 lb)	500	slow	0.0042	0.0040	50	85	81
57	Love seat, wood frame, foam cushions, 54.6 kg (120.37 lb)	350	medium	0.0086	0.0082	500	1000	949
61	Wardrobe, 3⁄4 in. particleboard, 120.33 kg (265.28 lb)	150	medium	0.0469	0.0445	0	1200	1138

Δ ***TABLE B.2.3.2.6.2(e)*** *Continued*

Test No.	*Item/Description/Mass*	*Growth Time (t_g) (sec)*	*Classification*	*Fuel Fire Intensity Coefficient (α)*		*Virtual Time (tv) (sec)*	*Maximum Heat Release Rates*	
				kW/sec²	*Btu/sec³*		*kW*	*Btu/sec*
62	Bookcase, plywood with aluminum frame, 30.39 kg (67.00 lb)	65	fast	0.2497	0.2368	40	25	24
64	Easy chair, molded flexible urethane frame, 15.98 kg (35.23 lb)	1000	slow	0.0011	0.0010	750	450	427
66	Easy chair, 23.02 kg (50.75 lb)	76	fast	0.1827	0.1733	3700	600	569
67	Mattress and box spring, 62.36 kg (137.48 lb) (later)	350	medium	0.0086	0.0082	400	500	474
67	Mattress and box spring, 62.36 kg (137.48 lb) (initial)	1100	slow	0.0009	0.0009	90	400	379

Note: For tests 19, 21, 29, 42, and 67, different power law curves were used to model the initial and the latter realms of burning. In examples such as these, engineers should choose the fire growth parameter that best describes the realm of burning to which the detection system is being designed to respond.

*Fire growth exceeds design data.

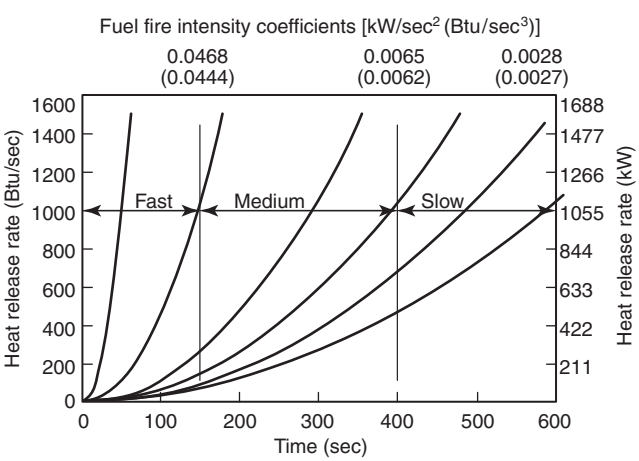

FIGURE B.2.3.2.6.2 *Power Law Heat Release Rates.*

B.2.3.2.6.3 Graphs of heat release data from the 40 furniture calorimeter tests can be found in *Investigation of a New Sprinkler Sensitivity Approval Test: The Plunge Test* [8]. Best fit power law fire growth curves have been superimposed on the graphs. Data from these curves can be used with this guide to design or analyze fire detection systems that are intended to respond to similar items burning under a flat ceiling. Table B.2.3.2.6.2(e) is a summary of the data.

Additional sources of information for developing design fire curves include the following:

1. Heat release rate data determined from experimental work (i.e., using a furniture calorimeter)
2. Full-scale tests of actual contents
3. Generic curves
4. Fire growth model that automatically generates heat release rate data

B.2.3.2.6.4 In addition to heat release rate data, the original NIST reports [3] contain data on particulate conversion and radiation from the test specimens. These data can be used to determine the threshold fire size (heat release rate) at which tenability becomes endangered or the point at which additional fuel packages might become involved in the fire.

B.2.3.2.6.5 The *NFPA Fire Protection Handbook* [22], SFPE *Handbook of Fire Protection Engineering*, and *Upholstered Furniture Heat Release Rates Measured with a Furniture Calorimeter* [3] contain further information on heat release rates and fire growth rates.

B.2.3.2.6.6 Technical literature searches can be performed using a number of resources including FIREDOC, a document base of fire literature that is maintained by NIST.

B.2.3.2.6.7 A series of design fire curves are included as part of the "FASTLite" computer program available from NIST.

B.2.3.2.6.8 In addition, there are various organizations conducting tests and posting results of various test data on their websites, including the UK's British Research Establishment (BRE), Worcester Polytechnic Institute, and NIST's FASTData Fire Test Database.

B.2.3.3 Develop and Evaluate Candidate Fire Detection Systems.

B.2.3.3.1 Once the design objectives, the potential fire scenarios, and the room characteristics are well understood, the designer can select an appropriate detection strategy to detect the fire before its critical fire size (Q_{CR}) is reached. Important factors to consider include the type of detector, its sensitivity to expected fire signatures, its alarm threshold level and required duration at that threshold, expected installed location (e.g., distance from fire, or below ceiling), and freedom from nuisance response to expected ambient conditions. *(See Chapter 17 and Annex A.)*

System Design Tip

Candidate designs usually differ from the design outlined in the Code. Usually a designer compares the response of the detection system designed using a performance-based approach to the response of a system designed following prescriptive requirements. A designer also evaluates candidate designs against acceptance criteria previously established by a consensus of the relevant stakeholders.

In addition to the operational and response characteristics, stakeholders often set limits on the amount of disruption, visibility, or other ways the fire alarm system will affect the intended use of the protected space. For example, the history and heritage of an historic structure must be preserved by retaining the appearance of the structure. In such cases, the visibility of the fire protection system must be limited.

B.2.3.3.2 Reliability of the detection system and individual components should be computed and included in the selection and evaluation of the candidate fire detection system. A performance-based alternative design cannot be deemed performance-equivalent unless the alternative design provides comparable reliability to the prescriptive design it is intended to replace.

Reliability studies can be part of RAMS studies (i.e., reliability, availability, maintainability, and safety). RAMS is a tool that is used to manage dependability in "mission critical" systems. These are all factors that should be considered to ensure the system will continue to operate as designed, as well as provide ease of recommended maintenance and technician safety during maintenance.

The basis of RAMS is a systematic process, based on the system life cycle and tasks within it, that does the following:

(1) Assists the client to specify system requirements, in terms of dependability, from a general mission statement to availability targets for systems, subsystems, and components (including software)
(2) Assesses proposed designs, using formal RAMS techniques, to see how targets are met and where objectives are not achieved

(3) Provides a means to make recommendations to designers and a system of hazard logging, to record and eventually "check off" identified necessary actions

The technical concepts of availability and reliability are based on a knowledge of and means to assess the following:

(1) All possible system failure modes in the specified application environment
(2) The probability (or rate) of occurrence of a system failure mode
(3) The cause and effect of each failure mode on the functionality of the system
(4) Efficient failure detection and location
(5) The efficient restorability of the failed system
(6) Economic maintenance over the required life cycle of the system
(7) Human factors issues regarding safety during inspection, testing, and maintenance

Fire alarm systems typically have high levels of supervision and fault-tolerance. Consequently, designers usually use mission effectiveness to evaluate fire alarm systems rather than strict reliability. The equipment, the system design, the installation, and the maintenance all contribute to the inherent mission effectiveness of a fire alarm system.

System Design Tip

B.2.3.3.3 Various methods are available to evaluate whether a candidate design will achieve the previously established performance criteria. Some methods are presented in Section B.3.

Sections B.3, B.4, and B.5 describe mathematical methods for predicting the performance of heat, smoke, and flame detectors, respectively. In addition, Section B.6 discusses the use of computer fire models to assist in the design and analysis of heat and smoke detectors.

System Design Tip

B.2.3.3.4 Candidate designs developed in the context of comparison evaluation might require comparing the response of the detection system designed using a performance-based approach to that of a prescriptive-based design. It could also be evaluated against acceptance criteria previously established with applicable stakeholders.

In addition to the preceding operational and response characteristics that need to be considered, there might be limitations set on the amount of disruption, visibility, or the impact the system will have on the space in which it is to be installed. This is particularly important in heritage-type buildings where one would want these to be as unobtrusive as possible, yet not require ripping down ornate ceilings to install.

B.2.3.4 Select and Document Final Design.

B.2.3.4.1 The last step in the process is the preparation of design documentation and equipment and installation specifications.

The designer must document each design decision. Proper documentation establishes the reasoning behind the design decisions and minimizes the opportunity for error. Proper documentation also ensures that all involved parties understand the steps needed to implement the design, including the selection of equipment, the methods of installation, and the maintenance program.

System Design Tip

Δ **B.2.3.4.2** These documents should encompass the following information [25]:

(1) Participants in the process — persons involved, their qualifications, function, responsibility, interest, and contributions.
(2) Scope of work — purpose of conducting the analysis or design, part of the building evaluated, assumptions, and so forth.

(3) Design approach — approach taken, where and why assumptions were made, and engineering tools and methodologies applied.
(4) Project information — hazards, risks, construction type, materials, building use, layout, existing systems, occupant characteristics, and so forth.
(5) Goals and objectives — agreed upon goals and objectives, how they were developed, who agreed to them and when.
(6) Performance criteria — clearly identify performance criteria and related objective(s), including any safety, reliability, or uncertainty factors applied, and support for these factors where necessary.
(7) Fire scenarios and design fires — description of fire scenarios used, bases for selecting and rejecting fire scenarios, assumptions, and restrictions.
(8) Design alternative(s) — describe design alternative(s) chosen, basis for selecting and rejecting design alternative(s), heat release rate, assumptions, and limitations. [This step should include the specific design objective (Q_{DO}) and the critical heat release rate (Q_{CR}) used, comparison of results with the performance criteria and design objectives, and a discussion of the sensitivity of the selected design alternative to changes in the building use, contents, fire characteristics, occupants, and so forth.]
(9) Engineering tools and methods used — description of engineering tools and methods used in the analysis or design, including appropriate references (literature, date, software version, and so forth), assumptions, limitations, engineering judgments, input data, validation data or procedures, and sensitivity analyses.
(10) Drawings and specifications — detailed design and installation drawings and specification.
(11) Test, inspection, and maintenance requirements *(see Chapter 14)*.
(12) Fire safety management concerns — allowed contents and materials in the space in order for the design to function properly, training, education, and so forth.
(13) References — software documentation, technical literature, reports, technical data sheets, fire test results, and so forth.
(14) Critical design assumptions — should include all assumptions that need to be maintained throughout the life cycle of the building so that the design functions as intended.
(15) Critical design features — should include the design features and parameters that need to be maintained throughout the life of the building so that the design functions as intended.
(16) Operations and maintenance manual — an operation and maintenance manual should be developed that clearly states the requirements for ensuring that the components of the performance-based design are correctly in place and functioning as designed. All subsystems should be identified, as well as their operation and interaction with the fire detection system. It should also include maintenance and testing frequencies, methods, and forms. The importance of testing interconnected systems should be detailed (i.e., elevator recall, suppression systems, HVAC shutdown, and so on).
(17) Inspection, testing, maintenance, and commissioning — requirements for commissioning of systems and any special procedures or test methods — should be documented as well as inspection, testing, and maintenance procedures to address the design as well as any pertinent features or systems that need to be assessed.

B.2.3.5 Management. It is important to ensure that the systems are designed, installed, commissioned, maintained, and tested on regular intervals as indicated in Chapter 14. In addition, the person conducting the testing and inspections should be aware of the background of the design and the need to evaluate not only the detector and whether it operates but also be aware of changing conditions including the following:

(1) Changes in hazard being protected
(2) Location of the hazard changes
(3) Other hazards introduced into the area
(4) Ambient environment
(5) Invalidity of any of the design assumptions

B.3 Evaluation of Heat Detection System Performance.

The performance-based design process for fire alarm systems is formally recognized as an alternative to designs developed using the prescriptive requirements of the Code. Calculations such as those outlined in Section B.3 represent an integral part of performance-based design. However, performance-based design is a process, and the computational tools outlined in this section are intended to support the evaluation of candidate fire detection system designs.

Designers should review Section 17.3 carefully before undertaking a design based on these computational methods. When undertaking a performance-based design, designers assume responsibility for the design assumptions offered to the other stakeholders, as well as an assessment of the implications of adopting such assumptions or criteria. This approach puts a greater burden of responsibility on the designers when compared to implementing the requirements of a prescriptive code.

System Design Tip

B.3.1 General. Section B.3 provides a method for determining the application spacing for both fixed-temperature heat detectors (including sprinklers) and rate-of-rise heat detectors. This method is valid only for use when detectors are to be placed on a large, flat ceiling. It predicts detector response to a geometrically growing flaming fire at a specific fire size. This method takes into account the effects of ceiling height, radial distance between the detector and the fire, threshold fire size [critical heat release rate (Q_{CR})], rate of fire development, and detector response time index. For fixed-temperature detectors, the ambient temperature and the temperature rating of the detector are also considered. This method also allows for the adjustment of the application spacing for fixed-temperature heat detectors to account for variations in ambient temperature (T_a) from standard test conditions.

B.3.1.1 This method can also be used to estimate the fire size at which detection will occur, given an existing array of listed heat detectors installed at a known spacing, ceiling height, and ambient conditions.

To analyze the response of an existing fire detection system, the designer must also quantify the fire growth rate and detector temperature rating.

System Design Tip

B.3.1.2 The effect of rate of fire growth and fire size of a flaming fire, as well as the effect of ceiling height on the spacing and response of smoke detectors, can also be determined using this method.

A designer can predict the response of a smoke detector by modeling the smoke detector as a very sensitive heat detector. Engineers have used this approach for many years. The model relies on the premise that the ceiling jet, formed by the buoyant plume as it collides with the ceiling, provides the force to move smoke horizontally beneath the ceiling from the fire to the detector. Consequently, the smoke and the heat are conveyed together. This model supports the notion that a correlation exists between temperature rise and smoke density as the fire plume or ceiling jet impinge on a smoke detector.

A series of U.S. Navy tests evaluated temperature rise as an indicator of smoke detector response. For flaming fires, Geiman [2003] graphically presents the percentage of spot-type smoke detectors that

System Design Tip

alarmed at a temperature rise less than or equal to two thresholds, 4°C (7°F) and 13°C (23°F). Geiman's review of the Navy tests considered two test spaces — one 6.05 m × 3.61 m (19.8 ft × 11.8 ft) in area and the other 5.94 m × 8.08 m (19.5 ft × 26.5 ft) in area, and both 3.05 m (10 ft) in height. The flaming fire source used four different wood cribs, with heat release rates of approximately 12, 25, 50, and 125 kW. The results distinguish between ionization and photoelectric detectors as shown in Exhibit B.1. Geiman explains the data in the graph as follows:

> As with the evaluation of the optical density alarm threshold, the typical response of smoke detectors in Figure 7 [Exhibit B.1] is assumed to be at 50 percent (i.e., half of alarms occur at greater temperature rises and half occur at lesser temperature rises). A temperature rise threshold of 4°C therefore provides a more conservative estimate of the ionization detector response to flaming fires than the typical detector with 88 percent of the alarms occurring at or below threshold. However, this same threshold does not capture the typical detector response for flaming fires being detected by photoelectric detectors (only 36 percent of detectors alarmed below the threshold). At an alarm threshold of 13°C, the results are slightly different. As expected based on the performance of the 4°C threshold, an alarm threshold of 13°C provides a significantly conservative estimate of the detector response (i.e., 98 percent of alarms occurred at or below this threshold) as compared to the typical response. The 13°C threshold does capture the typical response of photoelectric detectors to flaming fires, in contrast to the 4°C threshold.
>
> Additional guidance on this method is in B.4.7.5 and B.4.8.1.

B.3.1.3 The methodology contained herein uses theories of fire development, fire plume dynamics, and detector performance. These are considered the major factors influencing detector response. This methodology does not address several lesser phenomena that, in general, are considered unlikely to have a significant influence. A discussion of ceiling drag, heat

EXHIBIT B.1

Percentage of Detectors That Alarmed at a Temperature Rise Less Than or Equal to Each Temperature Alarm Threshold for Navy Tests with Flaming Fires, as Detailed by Geiman [2003]. (Source: "Evaluation of Smoke Detector Response Estimation Methods," Master of Science Thesis, University of Maryland, College Park, MD, December 2003. Available from http://hdl.handle.net/1903/113)

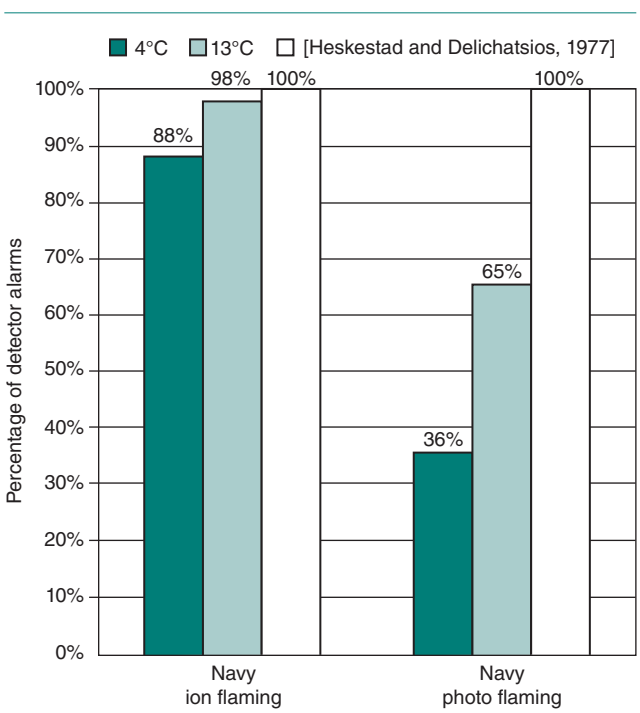

loss to the ceiling, radiation to the detector from a fire, re-radiation of heat from a detector to its surroundings, and the heat of fusion of eutectic materials in fusible elements of heat detectors and their possible limitations on the design method are provided in References 4, 11, 16, and 18 in I.1.2.18.

B.3.1.4 The methodology in Section B.3 does not address the effects of ceiling projections, such as beams and joists, on detector response. While it has been shown that these components of a ceiling have a significant effect on the response of heat detectors, research has not yet resulted in a simplified method for quantifying this effect. The prescriptive adjustments to detector spacing in Chapter 17 should be applied to application spacings derived from this methodology. Computational fluid dynamics (CFD) programs are available and can assist in analyzing the fire and development and spread of heat and smoke, as well as the potential effects of varying ceiling configurations and characteristics including sloped and beamed ceilings.

Ceiling slope and surface obstructions affect the flow of a ceiling jet, resulting in changes in the computed detector response. The spacing adjustments outlined in Chapter 17 can be applied to deal with sloped or obstructed ceilings.

Plume and ceiling jet dynamics can be used to estimate qualitatively the effect of sloped and obstructed ceilings on the response of heat detectors. However, no algebraic computational method has been sufficiently vetted by the fire protection engineering community to warrant inclusion in Annex B. The Fire Dynamics Simulator Computational Fluid Dynamics (CFD) program developed and supported by the National Institute of Standards and Technology (NIST) has the capability to model buoyant plume and ceiling jet flows across sloped ceilings and can be used for estimated detector response.

B.3.2 Considerations Regarding Input Data.

Δ **B.3.2.1 Required Data.** The data listed in B.3.2.1.1 and B.3.2.1.2 are necessary in order to use the methods in this annex for either design or analysis.

The computational method shown can be implemented with either SI or U.S. customary units of measure. All parameters must be expressed in the same measurement environment, SI or U.S. customary.

The following are the units for the variables listed in B.3.2.1:

T = °C or °F
H = m or ft
RTI = $m^{1/2}sec^{1/2}$ or $ft^{1/2}sec^{1/2}$
α = kW/sec^2 or Btu/sec^3
t_g = sec
S = m or ft
Q = kW or Btu/sec

B.3.2.1.1 Design. Data required to determine design include the following:

(1) Ceiling height or clearance above fuel (H)
(2) Threshold fire size at which response must occur (Q_d) or the time to detector response (t_d)
(3) Response time index (RTI) for the detector (heat detectors only) or its listed spacing
(4) Ambient temperature (T_a)
(5) Detector operating temperature (T_s) (heat detectors only)
(6) Rate of temperature change set point for rate-of-rise heat detectors (T_s/min)
(7) Fuel fire intensity coefficient (α) or the fire growth time (t_g)

B.3.2.1.2 Analysis. Data required to determine analysis include the following:

(1) Ceiling height or clearance above fuel (H)
(2) Response time index (RTI) for the detector (heat detectors only) or its listed spacing
(3) Actual installed spacing (S) of the existing detectors
(4) Ambient temperature (T_a)
(5) Detector operating temperature (T_s) (heat detectors only)
(6) Rate of temperature change set point for rate-of-rise heat detectors (T_s/min)
(7) Fuel fire intensity coefficient (α) or the fire growth time (t_g)

B.3.2.2 Ambient Temperature Considerations.

B.3.2.2.1 The maximum ambient temperature expected to occur at the ceiling will directly affect the choice of temperature rating for a fixed-temperature heat detector application. However, the minimum ambient temperature likely to be present at the ceiling is also very important. When ambient temperature at the ceiling decreases, more heat from a fire is needed to bring the air surrounding the detector's sensing element up to its rated (operating) temperature. This results in slower response when the ambient temperature is lower. In the case of a fire that is growing over time, lower ambient temperatures result in a larger fire size at the time of detection.

B.3.2.2.2 Therefore, selection of the minimum ambient temperature has a significant effect on the calculations. The designer should decide what temperature to use for these calculations and document why that temperature was chosen. Because the response time of a given detector to a given fire is dependent only on the detector's time constant and the temperature difference between ambient and the detector rating, the use of the lowest anticipated ambient temperature for the space results in the most conservative design. For unheated spaces, a review of historical weather data would be appropriate. However, such data might show extremely low temperatures that occur relatively infrequently, such as every 100 years. Depending on actual design considerations, it might be more appropriate to use an average minimum ambient temperature. In any case, a sensitivity analysis should be performed to determine the effect of changing the ambient temperature on the design results.

The National Oceanic and Atmospheric Administration (NOAA) is a frequently used source for weather data in the United States (www.noaa.gov).

B.3.2.2.3 In a room or work area that has central heating, the minimum ambient temperature would usually be about 20°C (68°F). On the other hand, certain warehouse occupancies might be heated only enough to prevent water pipes from freezing and, in this case, the minimum ambient temperature can be considered to be 2°C (35°F), even though, during many months of the year, the actual ambient temperature can be much higher.

B.3.2.3 Ceiling Height Considerations.

B.3.2.3.1 A detector ordinarily operates sooner if it is nearer to the fire. Where ceiling heights exceed 4.9 m (16 ft), ceiling height is the dominant factor in the detection system response.

System Design Tip

When calculations show that the fire size at the time of response exceeds the design objective (design fire), the designer can reduce the spacing of detectors, which moves them closer to the fire plume centerline. In some circumstances, particularly with high ceilings and small design fires, the designer must understand that further reductions in the detector spacing cannot improve the system response. When the detector spacing is reduced to less than 0.4 of the ceiling height, a detector is in the plume regardless of the fire location. Because the temperature and velocity gradients across the plume are not large, further spacing reductions likely will not enhance system performance. The design goals for the

hazard area might require a faster response than that attainable from heat detectors. Under this set of circumstances, the designer will have to consider other types of detection.

B.3.2.3.2 As flaming combustion commences, a buoyant plume forms. The plume is comprised of the heated gases and smoke rising from the fire. The plume assumes the general shape of an inverted cone. The smoke concentration and temperature within the cone varies inversely as a variable exponential function of the distance from the source. This effect is very significant in the early stages of a fire, because the angle of the cone is wide. As a fire intensifies, the angle of the cone narrows and the significance of the effect of height is lessened.

B.3.2.3.3 As the ceiling height increases, a larger-size fire is necessary to actuate the same detector in the same length of time. In view of this, it is very important that the designer consider the size of the fire and rate of heat release that might develop before detection is ultimately obtained.

Δ **B.3.2.3.4** The procedures presented in B.3.2.3 are based on analysis of data for ceiling heights up to 9.1 m (30 ft). No data were analyzed for ceiling heights greater than 9.1 m (30 ft). In spaces where the ceiling heights exceed this limit, B.3.2.3 offers no guidance. [40]

B.3.2.3.5 The relationships presented here are based on the difference between the ceiling height and the height of the fuel item involved in the fire. It is recommended that the designer assume the fire is at floor level and use the actual distance from floor to ceiling for the calculations. This will yield a design that is conservative, and actual detector response can be expected to exceed the needed speed of response in those cases where the fire begins above floor level.

When analyzing an existing detection system, if the designer assigns a value for *H* that represents the distance from the floor to the ceiling, this height will lead to a maximum predicted detection time. In such a case, the predicted detection time will exceed the actual detection time during a fire. Often, systems respond faster than the calculated detection time because the ignited fuel is a significant distance above the floor. Some structures are constructed and used in a manner that precludes a credible fuel load at the floor level. In such cases, the designer can produce a more accurate analysis by selecting a value for *H* that represents a reasonable worst case. The fuel load location assumed for the purposes of design or analysis must be thoroughly documented.

System Design Tip

B.3.2.3.6 Where the designer desires to consider the height of the potential fuel in the room, the distance between the base of the fuel and the ceiling should be used in place of the ceiling height. This design option is appropriate only if the minimum height of the potential fuel is always constant and the concept is approved by the authority having jurisdiction.

B.3.2.4 Operating Temperature.

B.3.2.4.1 The operating temperature, or rate of temperature change, of the detector required for response is obtained from the manufacturer's data and is determined during the listing process.

B.3.2.4.2 The difference between the rated temperature of a fixed-temperature detector (T_s) and the maximum ambient-temperature (T_a) at the ceiling should be as small as possible. However, to reduce unwanted alarms, the difference between operating temperature and the maximum ambient temperature should be not less than 11°C (20°F). *(See Chapter 17.)*

The designer should thoroughly analyze the location of each heat detector to make certain that no nonfire heat sources — including but not limited to machinery and equipment, vehicles, space heaters, steam lines, reactor vessels, or compressors — are near a heat detector. These types of heat sources can cause local or intermittent hot spots and lead to unwanted alarms.

System Design Tip

B.3.2.4.3 If using combination detectors incorporating both fixed temperature and rate-of-rise heat detection principles to detect a geometrically growing fire, the data contained herein for rate-of-rise detectors should be used in selecting an installed spacing, because the rate-of-rise principle controls the response. The fixed-temperature set point is determined from the maximum anticipated ambient temperature.

System Design Tip

A designer may choose to calculate the response of the detector for both rate-of-rise and fixed-temperature operation. Generally, detectors will operate based on the rate-of-rise principle first and the fixed-temperature principle second.

B.3.2.5 Time Constant and Response Time Index (RTI). The flow of heat from the ceiling jet into a heat detector sensing element is not instantaneous. It occurs over a period of time. A measure of the speed with which heat transfer occurs, the thermal response coefficient is needed to accurately predict heat detector response. This is currently called the detector time constant (τ_0). The time constant is a measure of the detector's sensitivity. The sensitivity of a heat detector, τ_0 or RTI, should be determined by validated test. Research by FM Global [43,44,45] has shown that such a correlation exists and has resulted in a test method to determine RTI. This test method is documented in FM Approval Standard 3210, *Heat Detectors for Automatic Fire Alarm Signaling*. Heat detectors should be listed with their RTI so that heat detector spacing can be appropriately determined for various objectives and applications. For older or existing detectors, given the detector's listed spacing and the detector's rated temperature (T_s), Table B.3.2.5, developed in part by Heskestad and Delichatsios [10], can be used to find the detector time constant.

System Design Tip

The referenced research material will help designers in their work and in understanding the response time index (RTI).

Δ ***TABLE B.3.2.5*** *Time Constants (τ_0) for Any Listed Heat Detector [at a reference velocity of 1.5 m/sec (5 ft/sec)]*

Listed Spacing		*Underwriters Laboratories Inc.*						*Factory Mutual Research Corporation (All Temperatures)*
m	*ft*	*53.3°C (128°F)*	*57.2°C (135°F)*	*62.8°C (145°F)*	*71.1°C (160°F)*	*76.7°C (170°F)*	*91.1°C (196°F)*	
3.05	10	400	330	262	195	160	97	196
4.57	15	250	190	156	110	89	45	110
6.10	20	165	135	105	70	52	17	70
7.62	25	124	100	78	48	32	—	48
9.14	30	95	80	61	36	22	—	36
12.19	40	71	57	41	18	—	—	—
15.24	50	59	44	30	—	—	—	—
21.34	70	36	24	9	—	—	—	—

Notes: (1) These time constants are based on an analysis [10] of the Underwriters Laboratories Inc. and Factory Mutual listing test procedures. (2) These time constants can be converted to response time index (RTI) values by using the equation RTI = τ_0 (5.0 ft/sec)$^{1/2}$. *(See also B.3.3.)*

The RTI is a measure of the speed with which heat can flow into the detector and raise the temperature of the heat-sensing component. The RTI can be thought of as a measure of the sensitivity of the heat-sensing element responding to rising temperature. Commercially available heat detectors generally exhibit RTIs with values less than 100, with 10 indicating a more rapid response than 100.

The response time of a heat detector to a given fire in a given compartment can be predicted only if both the operating temperature and the RTI are known. The computational method for predicting heat detector response is outlined in B.3.3. RTI has units of $m^{1/2}sec^{1/2}$, and the computational method that uses RTI requires that only metric units be employed. The only recognized test method for determining RTI is the "plunge test," as outlined in FM Approval Standard 3210, *Heat Detectors for Automatic Fire Alarm Signaling*. See the commentary following 3.3.251 and Exhibit 3.41.

System Design Tip

Small differences in the numerical value of RTI represent only small differences in response time. A heat detector with an RTI of 15 is not significantly faster than one with an RTI of 16. However, a heat detector with an RTI of 5 will respond substantially faster than one with an RTI of 50, when all other factors affecting response are held constant. The designer should obtain the RTI for the selected heat detector from the detector manufacturer. Paragraph 17.6.2.2.2.3 requires that the RTI be marked on the detector.

In 2012, Pomeroy [2010] provided an analysis of temperature and velocity effects on RTI for heat detectors. Although FM Standard 3210 is used to determine RTI values, Pomeroy's work shows that RTI might not always be a constant value for all temperature and velocity conditions. Based on the test data, it was determined that RTI is not independent of temperature or velocity. While RTI remains roughly constant at 75°C (167°F) for all velocities, RTI appears to have a positive correlation with velocity at the 200°C (392°F) test conditions as used in the FM Standard 3210 plunge test. If an engineering analysis of heat detector response is performed, these RTI variations could warrant further sensitivity analysis using a range of RTI values depending on the type of heat detector chosen. Exhibit B.2 illustrates data compiled by Pomeroy showing how the average RTI for six heat detector models differs under various plunge test velocities and temperature exposures.

For existing systems using heat detectors for which no value of RTI has been determined, the only available means to obtain a measure of heat detector thermal response is to calculate an approximate value for RTI. To calculate RTI, obtain the value for τ_0 from Table B.3.2.5 and use it in the following relations:

EXHIBIT B.2

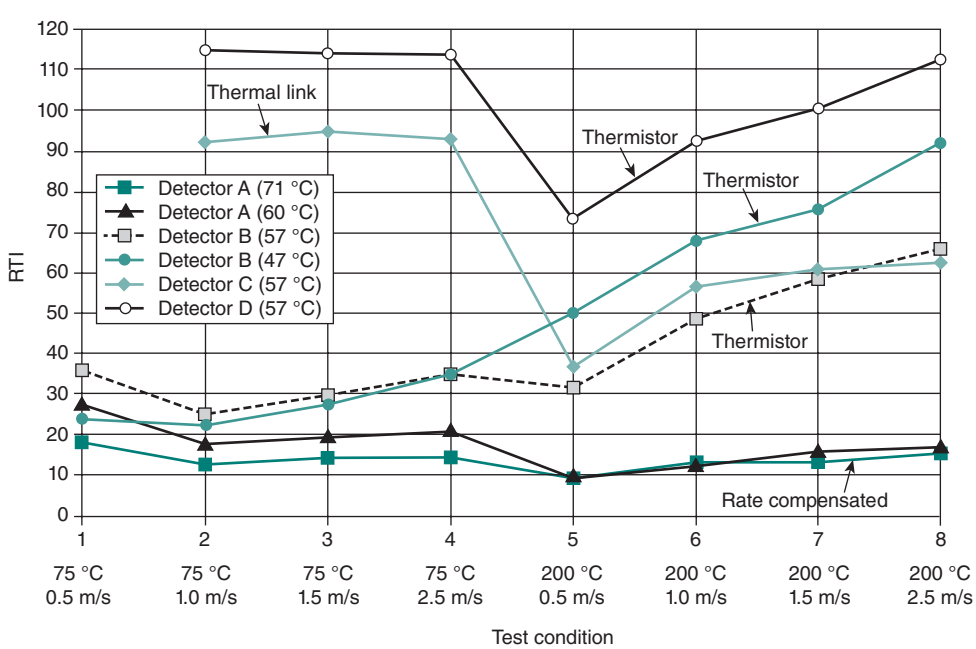

Average RTI for Six Heat Detector Models. (Source: Dan Gottuk, JENSEN HUGHES)

System Design Tip

$$RTI = \tau_0 (1.5 \text{ m/sec})^{1/2}$$

$$RTI = \tau_0 (5.0 \text{ ft/sec})^{1/2}$$

See B.3.3.3 for more information about time constants. If a value for RTI has been calculated, designers should consider performing a sensitivity analysis to verify that their design will remain valid over a range of values of RTI.

B.3.2.6 Fire Growth Rate.

B.3.2.6.1 Fire growth varies depending on the combustion characteristics and the physical configuration of the fuels involved. After ignition, most fires grow in an accelerating pattern. Information regarding the fire growth rate for various fuels has been provided previously in this annex.

Information on fire growth rates is in B.2.3.2.3.

B.3.2.6.2 If the heat release history for a particular fire is known, the α or t_g can be calculated using curve fitting techniques for implementation into the method detailed herein. [16]

B.3.2.6.3 In most cases, the exact fuel(s) and growth rates will not be known. Engineering judgment should therefore be used to select α or t_g that is expected to approximate the fire. Sensitivity analysis should also be performed to determine the effect on response from changes in the expected fire growth rate. In some analyses the effect on response will be negligible. Other cases might show that a more thorough analysis of potential fuels and fire scenarios is necessary.

Δ **B.3.2.7 Threshold Fire Size.** The user should refer to B.2.3.1 and B.2.3.2 regarding discussions on determining threshold fire sizes (Q_{DO} and Q_{CR}) to meet the design objectives.

System Design Tip

Designers should select threshold fire sizes carefully and should perform a sensitivity analysis to quantify the effect that variations in threshold fire size have on the system response.

B.3.3 Heat Detector Spacing.

B.3.3.1 Fixed-Temperature Heat Detector Spacing. The following method can be used to determine the response of fixed-temperature heat detectors for designing or analyzing heat detection systems.

B.3.3.1.1 The objective of designing a detection system is to determine the spacing of detectors required to respond to a given set of conditions and goals. To achieve the objectives, detector response must occur when the fire reaches a critical heat release rate, or in a specified time.

B.3.3.1.2 When analyzing an existing detection system, the designer is looking to determine the size of the fire at the time that the detector responds.

B.3.3.2 Theoretical Background. [26, 28] The design and analysis methods contained in Annex B are the joint result of extensive experimental work and of mathematical modeling of the heat and mass transfer processes involved. The original method was developed by Heskestad and Delichatsios [9, 10], Beyler [4], and Schifiliti [16]. It was recently updated by Marrion [28] to reflect changes in the original correlations as discussed in work by Heskestad and Delichatsios [11] and Marrion [27]. Additional research has been conducted by FM Global [43, 44, 45]. Paragraph B.3.3.2 outlines methods and data correlations used to model the heat transfer to a heat detector, as well as velocity and temperature correlations for growing fires at the location of the detector. Only the general principles are described here. More detailed information is available in References 4, 9, 10, 16, and 28 in I.1.2.18.

B.3.3.3 Heat Detector Correlations. The heat transfer to a detector can be described by the following equation:

$$Q_{total} = Q_{cond} + Q_{conv} + Q_{rad} \quad \textbf{[B.3.3.3]}$$

where:

Q_{total} = total heat transfer to a detector (kW or Btu/sec)
Q_{cond} = conductive heat transfer
Q_{conv} = convective heat transfer
Q_{rad} = radiative heat transfer

B.3.3.3.1 Because detection typically occurs during the initial stages of a fire, the radiant heat transfer component (Q_{rad}) can be considered negligible. In addition, because the heat-sensing elements of most of the heat detectors are thermally isolated from the rest of the detection unit, as well as from the ceiling, it can be assumed that the conductive portion of the heat release rate (Q_{cond}) is also negligible, especially when compared to the convective heat transfer rate. Because the majority of the heat transfer to the detection element is via convection, the following equation can be used to calculate the total heat transfer:

$$Q = Q_{conv} = H_c A\left(T_g - T_d\right) \quad \textbf{[B.3.3.3.1]}$$

where:

Q_{conv} = convective heat transfer (kW or Btu/sec)
H_c = convective heat transfer coefficient for the detector (kW/m^2·°C or Btu/ft^2·sec·°F)
A = surface area of the detector's element (m^2 or ft^2)
T_g = temperature of fire gases at the detector (°C or °F)
T_d = temperature rating, or set point, of the detector (°C or °F)

B.3.3.3.2 Assuming the detection element can be treated as a lumped mass (m) (kg or lbm), its temperature change can be defined as follows:

$$\frac{dT_d}{dt} = \frac{Q}{mc} \quad \textbf{[B.3.3.3.2]}$$

where:

dT_d/dt = change in temperature of detection element (deg/sec)
Q = heat release rate (kW or Btu/sec)
m = detector element's mass (kg or lbm)
c = detector element's specific heat (kJ/kg·°C or Btu/lbm·°F)

B.3.3.3.3 By inserting Equation B.3.3.3.2 into Equation B.3.3.3.1, the change in temperature of the detection element over time is expressed in Equation B.3.3.3.3.

$$\frac{dT_d}{dt} = \frac{H_c A(T_g - T_d)}{mc} \quad \textbf{[B.3.3.3.3]}$$

Note that the variables are identified in Section B.7.

B.3.3.3.4 The use of a time constant (τ) was proposed by Heskestad and Smith [8] in order to define the convective heat transfer to a specific detector's heat-sensing element. This time constant is a function of the mass, specific heat, convective heat transfer coefficient, and area of the element and can be expressed as follows:

$$\tau = \frac{mc}{H_c A} \qquad \textbf{[B.3.3.3.4]}$$

where:

m = detector element's mass (kg or lbm)
c = detector element's specific heat (kJ/kg·°C or Btu/lbm ·°F)
H_c = convective heat transfer coefficient for the detector (kW/m²·°C or Btu/ft²·sec·°F)
A = surface area of the detector's element (m² or ft²)
τ = detector time constant (seconds)

B.3.3.3.5 As seen in the equation B.3.3.3.4, τ is a measure of the detector's sensitivity. By increasing the mass of the detection element, the time constant, and thus the response time, increases.

B.3.3.3.6 Substituting into equation B.3.3.3.3 produces the following:

$$\frac{dT_d}{dt} = \frac{T_g - T_d}{\tau} \qquad \textbf{[B.3.3.3.6]}$$

Note that the variables are identified in Section B.7.

B.3.3.3.7 Research has shown [24] that the convective heat transfer coefficient for sprinklers and heat detection elements is similar to that of spheres, cylinders, and so forth, and is thus approximately proportional to the square root of the velocity of the gases passing the detector. As the mass, thermal capacity, and area of the detection element remain constant, the following relationship can be expressed as the response time index (RTI) for an individual detector:

$$\tau u^{1/2} \sim \tau_0 u_0^{1/2} = \text{RTI} \qquad \textbf{[B.3.3.3.7]}$$

where:

τ = detector time constant (seconds)
u = velocity of fire gases (m/sec or ft/sec)
u_0 = instantaneous velocity of fire gases (m/sec or ft/sec)
RTI = response time index

B.3.3.3.8 If τ_0 is measured at a given reference velocity (u_0),τ can be determined for any other gas velocity (u) for that detector. A plunge test is the easiest way to measure τ_0. It has also been related to the listed spacing of a detector through a calculation. Table B.3.2.5 presents results from these calculations [10]. The RTI value can then be obtained by multiplying τ_0 values by $u_0^{1/2}$.

B.3.3.3.9 It has become customary to refer to the time constant using a reference velocity of u_0 = 1.5 m/sec (5 ft/sec). For example, where u_0 = 1.5 m/sec (5 ft/sec), a τ_0 of 30 seconds corresponds to an RTI of 36 sec$^{1/2}$/m$^{1/2}$ (or 67 sec$^{1/2}$/ft$^{1/2}$). On the other hand, a detector that has an RTI of 36 sec$^{1/2}$/m$^{1/2}$ (or 67 sec$^{1/2}$/ft$^{1/2}$) would have a τ_0 of 23.7 seconds, if measured in an air velocity of 2.4 m/sec (8 ft/sec).

Research performed by FM Global on the response of heat detectors shows that the reference velocity of 1.5 m/sec (5 ft/sec) is suitable for predicting the response of electronic heat detectors used in fire alarm systems. The researchers compared the response times predicted from RTI values derived in accordance with FM Approval Standard 3210 to those of actual heat detectors subjected to full scale fire tests. In almost all cases, the predicted and actual detection times were within a few seconds.

B.3.3.3.10 The following equation can therefore be used to calculate the heat transfer to the detection element and thus determine its temperature from its local fire-induced environment:

$$\frac{dT_d}{dt} = \frac{u^{1/2}\left(T_g - T_d\right)}{\text{RTI}} \qquad \textbf{[B.3.3.3.10]}$$

Note that the variables are identified in Section B.7.

B.3.3.4 Temperature and Velocity Correlations. [26, 28] In order to predict the operation of any detector, it is necessary to characterize the local environment created by the fire at the location of the detector. For a heat detector, the important variables are the temperature and velocity of the gases at the detector. Through a program of full-scale tests and the use of mathematical modeling techniques, general expressions for temperature and velocity at a detector location have been developed by Heskestad and Delichatsios *(refer to references 4, 9, 10, and 16 in I.1.2.18)*. These expressions are valid for fires that grow according to the following power law relationship:

$$Q = \alpha t^p \qquad \textbf{[B.3.3.4]}$$

where:

Q = theoretical convective fire heat release rate (kW or Btu/sec)
α = fire growth rate (kW/sec^2 or Btu/sec^3)
t = time (seconds)
p = positive exponent

Several other ceiling jet correlations [41] have been developed over the years that the designer should also review as to their applicability to the particular design case. Sensitivity analyses should also be conducted with the analysis.

The *t*-squared fire growth curve is a specific case of equation B.3.3.4 where $p = 2$. Few situations exist where p will take on a value other than 2. Nitrated and perchlorated propellants might be better described as *t*-cubed fires. It is conceivable that fuels might be stored so that the rate of fire extension is offset by the rate of fuel consumption to give a total fire growth rate that could be described as having an exponent of 1.5, but such cases are rare. See B.2.3.2.3 for additional information on this equation.

Other fire growth correlations exist. For more information, see the references in B.6.5. NIST has also published correlations that can be used for prediction of detector response.

B.3.3.4.1 Relationships have been developed by Heskestad and Delichatsios [9] for temperature and velocity of fire gases in a ceiling jet. These have been expressed as follows [26]:

$$U_p^* = \frac{u}{A^{1/(3+p)} u^{1/(3+p)} H^{(p-1)/(3+p)}} = f\left(t_p^*, \frac{r}{H}\right) \qquad \textbf{[B.3.3.4.1a]}$$

$$\Delta T_p^* = g\left(t_p^*, \frac{r}{H}\right) = \frac{\Delta T}{A^{2/(3+p)}\left(\frac{T_a}{g}\right)\alpha^{2/(3+p)} H^{-(5-p)/(3+p)}} \qquad \textbf{[B.3.3.4.1b]}$$

where:

$$t_p^* = \frac{t}{A^{-1/(3+p)} \alpha^{-1/(3+p)} H^{4/(3+p)}} \qquad \textbf{[B.3.3.4.1c]}$$

and

$$A = \frac{g}{C_p T_a \rho_0} \qquad \textbf{[B.3.3.4.1d]}$$

Note that the variables are identified in Section B.7.

B.3.3.4.2 Using the correlations in B.3.3.4.1, Heskestad and Delichatsios [9], and with later updates from another paper by Heskestad [11], the following correlations were presented for

fires that had heat release rates that grew according to the power law equation, with $p = 2$. As previously discussed [10, 18], the $p = 2$ power law fire growth model can be used to model the heat release rate of a wide range of fuels. These fires are therefore referred to as *t-squared* fires.

$$t_{2f}^* = 0.861\left(1+\frac{r}{H}\right) \qquad \textbf{[B.3.3.4.2a]}$$

Δ

$$\Delta T_2^* = 0 \quad \text{for } t_2^* < t_{2f}^* \qquad \textbf{[B.3.3.4.2b]}$$

$$\Delta T_2^* = \left(\frac{t_2^* - t_{2f}^*}{0.146 + 0.242r/H}\right)^{4/3} \quad \text{for } t_2^* \geq t_{2f}^* \qquad \textbf{[B.3.3.4.2c]}$$

$$\frac{u_2^*}{\left(\Delta T_2^*\right)^{1/2}} = 0.59\left(\frac{r}{H}\right)^{-0.63} \qquad \textbf{[B.3.3.4.2d]}$$

Note that the variables are identified in Section B.7.

Δ **B.3.3.4.3** Work by Beyler [4] determined that the temperature and velocity correlations in B.3.3.4.2 could be substituted into the heat transfer equation for the detector and integrated. His analytical solution is as follows:

$$T_d(t) - T_d(0) = \left(\frac{\Delta T}{\Delta T_2^*}\right)\Delta T_2^*\left[\frac{1-\left(1-e^{-Y}\right)}{Y}\right] \qquad \textbf{[B.3.3.4.3a]}$$

$$\frac{dT_d(t)}{dt} = \frac{\left(\frac{4}{3}\right)\left(\frac{\Delta T}{\Delta T_2^*}\right)\left(\Delta T_2^*\right)^{1/4}\left(1-e^{-Y}\right)}{\left(\frac{t}{t_2^*}\right)D} \qquad \textbf{[B.3.3.4.3.b]}$$

where:

$$Y = \left(\frac{3}{4}\right)\left(\frac{u}{u_2^*}\right)^{1/2}\left(\frac{u_2^*}{\Delta T_2^{*1/2}}\right)^{1/2}\left(\frac{\Delta T_2^*}{\text{RTI}}\right)\left(\frac{t}{t_2^*}\right)D \qquad \textbf{[B.3.3.4.3c]}$$

and

$$D = 0.146 + 0.242r/H \qquad \textbf{[B.3.3.4.3d]}$$

Note that the variables are identified in Section B.7.

B.3.3.4.4 The steps involved in solving these equations for either a design or analysis situation are presented in Figure B.3.3.4.4 [28].

System Design Tip

Designers and engineers who expect to do performance estimates on a regular basis are advised to set up a spreadsheet application to perform the calculations outlined on the worksheet.

B.3.3.5 Limitations. [26]

Δ **B.3.3.5.1** If velocity and temperature of the fire gases flowing past a detector cannot be accurately determined, errors will be introduced when calculating the response of a detector. The graphs presented by Heskestad and Delichatsios indicate the errors in the calculated fire–gas temperatures and velocities [10]. A detailed analysis of these errors is beyond the scope of this

Fire Detection Design and Analysis Worksheet [28]
Design Example

1.	Determine ambient temperature (T_a) ceiling height or height above fuel (H).	T_a = _____ °C + 273 = _____ K H = _____ m
2.	Determine the fire growth characteristic (α or t_g) for the expected design fire.	α = _____ kW/sec^2 t_g = _____ sec
3a.	Define the characteristics of the detectors.	T_s = _____ °C + 273 = _____ K RTI = _____ m$^{1/2}$sec$^{1/2}$ $\frac{dT_d}{dt}$ = _____ °C/min τ_0 = _____ sec
3b. or	*Design* — Establish system goals (t_{CR} or Q_{CR}) and make a first estimate of the distance (r) from the fire to the detector.	t_{CR} = _____ sec r = _____ m Q_{CR} = _____ kW
3b.	*Analysis* — Determine spacing of existing detectors and make a first estimate of the response time or the fire size at detector response ($Q = \alpha t^2$).	r = _____ *1.41 = _____ = S (m) Q = _____ kW t_d = _____ sec
4.	Using equation B.3.3.4.2a, calculate the non-dimensional time (t^*_{2f}) at which the initial heat front reaches the detector.	$t^*_{2f} = 0.861\left(1 + \frac{r}{H}\right)$ t^*_{2f} =
5.	Calculate the factor A defined by the relationship for A in equation B.3.3.4.1d.	$A = \frac{g}{C_p T_a \rho_0}$ A =
6.	Use the required response time (t_{CR}) along with the relationship for t^*_p in equation B.3.3.4.1c and $p = 2$ to calculate the corresponding value of t^*_2.	$t^*_2 = \frac{t_{CR}}{A^{-1/(3+p)}\alpha^{-1/(3+p)}H^{4/(3+p)}}$ t^*_2 =
7.	If $t^*_2 > t^*_{2f}$, continue to step 8. If not, try a new detector position (r) and return to step 4.	
8.	Calculate the ratio $\frac{u}{u^*_2}$ using the relationship for U^*_p in equation B.3.3.4.1a.	$\frac{u}{u^*_2} = A^{1/(3+p)}\alpha^{1/(3+p)}H^{(p-1)/(3+p)}$ $\frac{u}{u^*_2}$ =
9.	Calculate the ratio $\frac{\Delta T}{\Delta T^*_2}$ using the relationship for ΔT^*_p in equation B.3.3.4.1b.	$\frac{\Delta T}{\Delta T^*_2} = A^{2/(3+p)}(T_a/g)\alpha^{2/(3+p)}H^{-(5-p)/(3+p)}$ $\frac{\Delta T}{\Delta T^*_2}$ =
10.	Use the relationship for ΔT^*_2 in equation B.3.3.4.2c to calculate ΔT^*_2.	$\Delta T^*_2 = \left[\frac{t^*_2 - t^*_{2f}}{(0.146 + 0.242r/H)}\right]^{4/3}$ ΔT^*_2 =
11.	Use the relationship for $\frac{u^*_2}{(\Delta T^*_2)^{1/2}}$ in equation B.3.3.4.2d to calculate the ratio $\frac{u^*_2}{(\Delta T^*_2)^{1/2}}$.	$\frac{u^*_2}{(\Delta T^*_2)^{1/2}} = 0.59\left(\frac{r}{H}\right)^{-0.63}$ $\frac{u^*_2}{(\Delta T^*_2)^{1/2}}$ =
12.	Use the relationships for Y and D in equations B.3.3.4.3c and B.3.3.4.3d to calculate Y.	$Y = \left(\frac{3}{4}\right)\left(\frac{u}{u^*_2}\right)^{1/2}\left[\frac{u^*_2}{(\Delta T^*_2)^{1/2}}\right]^{1/2}\left(\frac{\Delta T^*_2}{\text{RTI}}\right)\left(\frac{t}{t^*_2}\right)D$ Y =
13.	*Fixed Temperature HD* — Use the relationship for $T_d(t) - T_d(0)$ in equation B.3.3.4.3a to calculate the resulting temperature of the detector $T_d(t)$.	$T_d(t) = \left(\frac{\Delta T}{\Delta T^*_2}\right)\Delta T^*_2\left[1 - \frac{(1-e^{-Y})}{Y}\right] + T_d(0)$ $T_d(t)$ =
14.	*Rate of Rise HD* — Use the relationship for $\frac{dT_d(t)}{dt}$ in equation B.3.3.4.3b.	$dT_d = \left[\left(\frac{4}{3}\right)\left(\frac{\Delta T}{\Delta T^*_2}\right)(\Delta T^*_2)^{1/4}\frac{(1-e^{-Y})}{[(t/t^*_2)D]}\right]dt$ dT_d =
15.	If: 1. $T_d > T_s$ 2. $T_d < T_s$ 3. $T_d = T$	Repeat Procedure Using Design: 1. a larger r; 2. a smaller r; 3. $s = 1.41 \times r$ = _____ m Analysis: 1. a larger t_r; 2. a smaller t_r; 3. t_r = _____ sec

FIGURE B.3.3.4.4 *Fire Detection Design and Analysis Worksheet. [28]*

annex; however, some discussion is warranted. In using the method as presented in B.3.3.2, the user should be aware of the limitations of these correlations, as outlined in Reference 26. The designer should also refer back to the original reports.

Graphs of actual and calculated data show that errors in T_2^* can be as high as 50 percent, although generally there appears to be much better agreement. The maximum errors occur at *r/H* values of about 0.37. All other plots of actual and calculated data, for various *r/H*, show much smaller errors. In terms of the actual change in temperature over ambient, the maximum errors are on the order of 5°C to 10°C (9°F to 18°F). The larger errors occur with faster fires and lower ceilings.

At *r/H* = 0.37, the errors are conservative when the equations are used in a design problem. That is, the equations predicted lower temperatures. Plots of data for other values of *r/H* indicate that the equations predict slightly higher temperatures.

Errors in fire–gas velocities are related to errors in temperatures. The equations show that the velocity of the fire gases is proportional to the square root of the change in temperatures of the fire gases. In terms of heat transfer to a detector, the detector's change in temperature is proportional to the change in gas temperature and the square root of the fire–gas velocity. Hence, the expected errors bear the same relationships.

Based on the discussion in this section, errors in predicted temperatures and velocities of fire gases will be greatest for fast fires and low ceilings. Sample calculations simulating these conditions show errors in calculated detector spacings on the order of plus or minus one meter, or less.

B.3.3.5.2 The procedures presented in this annex are based on an analysis of test data for ceiling heights up to 9.1 m (30 ft). No data were analyzed for ceilings greater than 9.1 m (30 ft). The reader should refer to Reference 40 for additional insight.

B.3.3.6 Design Examples.

B.3.3.6.1 Define Project Scope. A fire detection system is to be designed for installation in an unsprinklered warehouse building. The building has a large, flat ceiling that is approximately 4 m (13.1 ft) high. The ambient temperature inside is normally 10°C (50°F). The municipal fire service has indicated that it can begin putting water on the fire within 5.25 minutes of receiving the alarm.

B.3.3.6.2 Identify Goals. Provide protection of property.

B.3.3.6.3 Define Stakeholder's Objective. No fire spread from initial fuel package.

B.3.3.6.4 Define Design Objective. Prevent radiant ignition of adjacent fuel package.

B.3.3.6.5 Develop Performance Criteria. After discussions with the plant fire brigade with regard to their capability and analyzing the radiant energy levels necessary to ignite adjacent fuel packages, it was determined that the fire should be detected and suppression activities started prior to its reaching 10,000 kW (9478 Btu/sec).

B.3.3.6.6 Develop Fire Scenarios and the Design Fire. Evaluation of the potential contents to be warehoused identified the areas where wood pallets are stored to be one of the highest fire hazards.

System Design Tip

The designer must review all the combustibles, their heat release rates, and their configuration/orientation. The designer must also analyze other scenarios using fire loads in other areas. With this analysis, the designer can then determine if the stack of wood pallets does present the worst case. Furthermore, if stakeholders desire future flexibility in the use of the space, the designer must use additional factors of safety.

B.3.3.6.6.1 The fire scenario involving the ignition of a stack of wood pallets will therefore be evaluated. The pallets are stored 0.5 m (1.5 ft) high. Fire test data *[see Table B.2.3.2.6.2(a)]* indicate that this type of fire follows the t^2 power law equation with a t_g equal to approximately 150 to 310 seconds. To be conservative, the faster fire growth rate will be used. Thus, using Equation B.3.3.4,

$$Q = \alpha t^p$$

$$1055 \text{ kW} = (\alpha \text{ kW/sec}^2)(150 \text{ sec})^2 \qquad \textbf{[B.3.3.6.6.1a]}$$

$$\alpha = 0.047 \text{ kW/sec}^2$$

or

$$Q = \alpha t^p$$

$$1000 \text{ Btu/sec} = (\alpha \text{ Btu/sec}^3)(150 \text{ sec})^2 \qquad \textbf{[B.3.3.6.6.1b]}$$

$$\alpha = 0.044 \text{ Btu/sec}^3$$

Note that the variables are identified in Section B.7.

B.3.3.6.6.2 Using the power law growth equation with $p = 2$, the time after open flaming until the fire grows to 10,000 kW (9478 Btu/sec) can be calculated as follows:

$$Q = \left(\frac{1055}{t_c^2}\right) t_{DO}^2 = \alpha t^2 \quad \text{(for SI units)} \qquad \textbf{[B.3.3.6.6.2a]}$$

or

$$Q = \left(\frac{1000}{t_c^2}\right) t_{DO}^2 = \alpha t^2 \quad \text{(for inch-pound units)} \qquad \textbf{[B.3.3.6.6.2b]}$$

$$t_{DO} = 461 \text{ seconds}$$

Note that the variables are identified in Section B.7.

As part of this analysis, the designer should verify that sufficient fuel exists in the initial fuel package to sustain the fire's continued growth rate over this length of time. Insufficient fuel or a change in fire growth rate will affect the detector response. See B.3.3.8.4.

System Design Tip

B.3.3.6.6.3 The critical heat release rate and time to detection can therefore be calculated as follows, assuming t_{respond} equals the 5.25 minutes necessary for the fire brigade to respond to the alarm and begin discharging water:

$$t_{CR} = t_{DO} - t_{\text{respond}} \qquad \textbf{[B.3.3.6.6.3a]}$$

$$t_{CR} = 461 - 315 = 146 \text{ seconds}$$

and thus

$$Q_{CR} = \alpha t_{CR}^2 \qquad \textbf{[B.3.3.6.6.3b]}$$

$$Q_{CR} = 1000 \text{ kW (948 Btu/sec)}$$

Note that the variables are identified in Section B.7.

B.3.3.7 Develop Candidate Designs.

B.3.3.7.1 Fixed-temperature heat detectors have been selected for installation in the warehouse with a 57°C (135°F) operating temperature and a UL-listed spacing of 9.1 m (30 ft). From Table B.3.2.5, the time constant is determined to be 80 seconds when referenced to a gas velocity of 1.5 m/sec (5 ft/sec). When used with Equation B.3.3.3.7, the detector's RTI can be calculated as follows:

$$\text{RTI} = \tau_0 u_0^{1/2} \qquad \textbf{[B.3.3.7.1a]}$$

$$\text{RTI} = 98\ \text{m}^{1/2}\text{sec}^{1/2}$$

or

$$\text{RTI} = 179\ \text{ft}^{1/2}\text{sec}^{1/2} \qquad \textbf{[B.3.3.7.1b]}$$

B.3.3.7.2 To begin calculations, it will be necessary to make a first guess at the required detector spacing. For this example, a first estimate of 4.7 m (15.3 ft) is used. This correlates to a radial distance of 3.3 m (10.8 ft).

B.3.3.8 Evaluate Candidate Designs. These values can then be entered into the design and analysis worksheet shown in Figure B.3.3.8 in order to evaluate the candidate design.

B.3.3.8.1 After 146 seconds, when the fire has grown to 1000 kW (948 Btu/sec) and at a radial distance of 3.3 m (10.8 ft) from the center of the fire, the detector temperature is calculated to be 57°C (135°F). This is the detector actuation temperature. If the calculated temperature of the detector were higher than the actuation temperature, the radial distance could be increased. The calculation would then be repeated until the calculated detector temperature is approximately equal to the actuation temperature.

System Design Tip

If the detector spacing cannot be changed, the designer can select another type of heat detector with a different listed spacing and a different RTI. The designer can then repeat the design calculation to determine whether a system using the second type of detector meets the performance criteria.

B.3.3.8.2 The last step is to use the final calculated value of r with the equation relating spacing to radial distance. This will determine the maximum installed detector spacing that will result in detector response within the established goals.

$$S = 2^{1/2} r \qquad \textbf{[B.3.3.8.2]}$$

$$S = 4.7\ \text{m}\ (15.3\ \text{ft})$$

where:

S = spacing of detectors

r = radial distance from fire plume axis (m or ft)

B.3.3.8.3 The following example of analysis is provided.

B.3.3.8.3.1 The following example shows how an existing heat detection system or a proposed design can be analyzed to determine the response time or fire size at response. The scenario that was analyzed in the previous example will be used again, with the exception that the warehouse building has existing heat detectors. The fire, building, and detectors have the same characteristics as the previous example with the exception of spacing. The detectors are spaced evenly on the ceiling at 9.1 m (30 ft) intervals.

B.3.3.8.3.2 The following equation is used to determine the maximum radial distance from the fire axis to a detector:

Fire Detection Design and Analysis Worksheet [28]
Design Example

1.	Determine ambient temperature (T_a) ceiling height or height above fuel (H).	T_a = 10 °C + 273 = 283 K H = 4 m
2.	Determine the fire growth characteristic (α or t_g) for the expected design fire.	α = 0.047 kW/sec^2 t_g = 150 sec
3a.	Define the characteristics of the detectors.	T_s = 57 °C + 273 = 330 K RTI = 98 m$^{1/2}$sec$^{1/2}$ $\frac{dT_d}{dt}$ = _____ °C/min τ_0 = _____ sec
3b. or	*Design* — Establish system goals (t_{CR} or Q_{CR}) and make a first estimate of the distance (r) from the fire to the detector.	t_{CR} = 146 sec r = 3.3 m Q_{CR} = 1000 kW
3b.	*Analysis* — Determine spacing of existing detectors and make a first estimate of the response time or the fire size at detector response ($Q = \alpha t^2$).	r = _____ *1.41 = _____ = S (m) Q = _____ kW t_d = _____ sec
4.	Using equation B.3.3.4.2a, calculate the non-dimensional time $\left(t^*_{2f}\right)$ at which the initial heat front reaches the detector.	$t^*_{2f} = 0.861\left(1+\frac{r}{H}\right)$ t^*_{2f} = 1.57
5.	Calculate the factor A defined by the relationship for A in equation B.3.3.4.1d.	$A = \frac{g}{C_p T_a \rho_0}$ A = 0.030
6.	Use the required response time (t_{CR}) along with the relationship for t^*_p in equation B.3.3.4.1c and $p = 2$ to calculate the corresponding value of t^*_2.	$t^*_2 = \frac{t_{CR}}{A^{-1/(3+p)}\alpha^{-1/(3+p)}H^{4/(3+p)}}$ t^*_2 = 12.98
7.	If $t^*_2 > t^*_{2f}$, continue to step 8. If not, try a new detector position (r) and return to step 4.	
8.	Calculate the ratio $\frac{u}{u^*_2}$ using the relationship for U^*_p in equation B.3.3.4.1a.	$\frac{u}{u^*_2} = A^{1/(3+p)}\alpha^{1/(3+p)}H^{(p-1)/(3+p)}$ $\frac{u}{u^*_2}$ = 0.356
9.	Calculate the ratio $\frac{\Delta T}{\Delta T^*_2}$ using the relationship for ΔT^*_p in equation B.3.3.4.1b.	$\frac{\Delta T}{\Delta T^*_2} = A^{2/(3+p)}(T_a/g)\,\alpha^{2/(3+p)}H^{-(5-p)/(3+p)}$ $\frac{\Delta T}{\Delta T^*_2}$ = 0.913
10.	Use the relationship for ΔT^*_2 in equation B.3.3.4.2c to calculate ΔT^*_2.	$\Delta T^*_2 = \left[\frac{t^*_2 - t^*_{2f}}{(0.146 + 0.242r/H)}\right]^{4/3}$ ΔT^*_2 = 105.89
11.	Use the relationship for $\frac{u^*_2}{(\Delta T^*_2)^{1/2}}$ in equation B.3.3.4.2d to calculate the ratio $\frac{u^*_2}{(\Delta T^*_2)^{1/2}}$.	$\frac{u^*_2}{(\Delta T^*_2)^{1/2}} = 0.59\left(\frac{r}{H}\right)^{-0.63}$ $\frac{u^*_2}{(\Delta T^*_2)^{1/2}}$ = 0.66
12.	Use the relationships for Y and D in equations B.3.3.4.3c and B.3.3.4.3d to calculate Y.	$Y = \left(\frac{3}{4}\right)\left(\frac{u}{u^*_2}\right)^{1/2}\left[\frac{u^*_2}{(\Delta T^*_2)^{1/2}}\right]^{1/2}\left(\frac{\Delta T^*_2}{\text{RTI}}\right)\left(\frac{t}{t^*_2}\right)D$ Y = 1.533
13.	*Fixed Temperature HD* — Use the relationship for $T_d(t) - T_d(0)$ in equation B.3.3.4.3a to calculate the resulting temperature of the detector $T_d(t)$.	$T_d(t) = \left(\frac{\Delta T}{\Delta T^*_2}\right)\Delta T^*_2\left[1-\frac{(1-e^{-Y})}{Y}\right] + T_d(0)$ $T_d(t)$ = 57.25
14.	*Rate of Rise HD* — Use the relationship for $\frac{dT_d(t)}{dt}$ in equation B.3.3.4.3b.	$dT_d = \left[\left(\frac{4}{3}\right)\left(\frac{\Delta T}{\Delta T^*_2}\right)(\Delta T^*_2)^{1/4}\frac{(1-e^{-Y})}{[(t/t^*_2)D]}\right]dt$ dT_d =
15.	If: 1. $T_d > T_s$ 2. $T_d < T_s$ 3. $T_d = T$	Repeat Procedure Using Design: 1. a larger r; 2. a smaller r; 3. $s = 1.41 \times r$ = 4.7 m Analysis: 1. a larger t_r; 2. a smaller t_r; 3. t_r = _____ sec

FIGURE B.3.3.8 *Fire Detection Design and Analysis Worksheet [28] — Design Example.*

$$S = 1.414r \qquad \textbf{[B.3.3.8.3.2a]}$$

or

$$r = \frac{S}{1.414} \qquad \textbf{[B.3.3.8.3.2b]}$$

$$r = 6.5 \text{ m } (21.2 \text{ ft})$$

where:

S = spacing of detectors
r = radial distance from fire plume axis (m or ft)

System Design Tip

At this point, the designer should perform a sensitivity analysis for each of the variables to determine if the design inordinately relies on an assumed value for one or more parameters.

B.3.3.8.3.3 Next, the response time of the detector or the fire size at response is estimated. In the preceding design, the fire grew to 1000 kW (948 Btu/sec) in 146 seconds when the detector located at a distance of 3.3 m (10.8 ft) responded. As the radial distance in this example is larger, a slower response time and thus a larger fire size at response is expected. A first approximation at the response time is made at 3 minutes. The corresponding fire size is found using the power law fire growth equation B.3.3.4 with p = 2 and α from B.3.3.6.6.1:

$$Q = \alpha t^p \qquad \textbf{[B.3.3.8.3.3a]}$$

$$Q = \left(0.047 \text{ kW/sec}^2\right)\left(180 \text{ sec}\right)^2$$

$$Q = 1523 \text{ kW}$$

or

$$Q = \left(0.044 \text{ Btu/sec}^3\right)\left(180 \text{ sec}\right)^2 \qquad \textbf{[B.3.3.8.3.3b]}$$

$$Q = 1426 \text{ Btu/sec}$$

B.3.3.8.3.4 These data can be incorporated into the fire detection design and analysis worksheet shown in Figure B.3.3.8.3.4 in order to carry out the remainder of the calculations.

B.3.3.8.3.5 Using a radial distance of 6.5 m (21 ft) from the axis of this fire, the temperature of the detector is calculated to be 41°C (106°F) after 3 minutes of exposure. The detector actuation temperature is 57°C (135°F). Thus, the detector response time is more than the estimated 3 minutes. If the calculated temperature were more than the actuation temperature, then a smaller t would be used. As in the previous example, calculations should be repeated varying the time to response until the calculated detector temperature is approximately equal to the actuation temperature. For this example, the response time is estimated to be 213 seconds. This corresponds to a fire size at response of 2132 kW (2022 Btu/sec).

B.3.3.8.4 The preceding examples assume that the fire continues to follow the t-squared fire growth relationship up to detector activation. These calculations do not check whether this will happen, nor do they show how the detector temperature varies once the fire stops following the power law relationship. The user should therefore determine that there will be sufficient fuel, since the preceding correlations do not perform this analysis. If there is not a sufficient amount of fuel, then there is the possibility that the heat release rate curve will flatten out or decline before the heat release rate needed for actuation is reached.

Fire Detection Design and Analysis Worksheet [28]
Design Analysis 2

1.	Determine ambient temperature (T_a) ceiling height or height above fuel (H).	T_a = 10 °C + 273 = 283 K H = 4 m
2.	Determine the fire growth characteristic (α or t_g) for the expected design fire.	α = 0.047 kW/sec^2 t_g = 150 sec
3a.	Define the characteristics of the detectors.	T_s = 57 °C + 273 = 330 K RTI = 98 m$^{1/2}$sec$^{1/2}$ $\frac{dT_d}{dt}$ = _____ °C/min τ_0 = _____ sec
3b. or	*Design* — Establish system goals (t_{CR} or Q_{CR}) and make a first estimate of the distance (r) from the fire to the detector.	t_{CR} = _____ sec r = _____ m Q_{CR} = _____ kW
3b.	*Analysis* — Determine spacing of existing detectors and make a first estimate of the response time or the fire size at detector response ($Q = \alpha t^2$).	r = 6.5 *1.41 = 9.2 = S (m) Q = 1,523 kW t_d = 180 sec
4.	Using equation B.3.3.4.2a, calculate the non-dimensional time $\left(t^*_{2f}\right)$ at which the initial heat front reaches the detector.	$t^*_{2f} = 0.861\left(1+\frac{r}{H}\right)$ t^*_{2f} = 2.26
5.	Calculate the factor A defined by the relationship for A in equation B.3.3.4.1d.	$A = \frac{g}{C_p T_a \rho_0}$ A = 0.030
6.	Use the required response time (t_{CR}) along with the relationship for t^*_p in equation B.3.3.4.1c and $p = 2$ to calculate the corresponding value of t^*_2.	$t^*_2 = \frac{t_{CR}}{A^{-1/(3+p)}\alpha^{-1/(3+p)}H^{4/(3+p)}}$ t^*_2 = 16
7.	If $t^*_2 > t^*_{2f}$, continue to step 8. If not, try a new detector position (r) and return to step 4.	
8.	Calculate the ratio $\frac{u}{u^*_2}$ using the relationship for U^*_p in equation B.3.3.4.1a.	$\frac{u}{u^*_2} = A^{1/(3+p)}\alpha^{1/(3+p)}H^{(p-1)/(3+p)}$ $\frac{u}{u^*_2}$ = 0.356
9.	Calculate the ratio $\frac{\Delta T}{\Delta T^*_2}$ using the relationship for ΔT^*_p in equation B.3.3.4.1b.	$\frac{\Delta T}{\Delta T^*_2} = A^{2/(3+p)}(T_a/g)\alpha^{2/(3+p)}H^{-(5-p)/(3+p)}$ $\frac{\Delta T}{\Delta T^*_2}$ = 0.913
10.	Use the relationship for ΔT^*_2 in equation B.3.3.4.2c to calculate ΔT^*_2.	$\Delta T^*_2 = \left[\frac{t^*_2 - t^*_{2f}}{(0.146+0.242r/H)}\right]^{4/3}$ ΔT^*_2 = 75.01
11.	Use the relationship for $\frac{u^*_2}{(\Delta T^*_2)^{1/2}}$ in equation B.3.3.4.2d to calculate the ratio $\frac{u^*_2}{(\Delta T^*_2)^{1/2}}$.	$\frac{u^*_2}{(\Delta T^*_2)^{1/2}} = 0.59\left(\frac{r}{H}\right)^{-0.63}$ $\frac{u^*_2}{(\Delta T^*_2)^{1/2}}$ = 0.435
12.	Use the relationships for Y and D in equations B.3.3.4.3c and B.3.3.4.3d to calculate Y.	$Y = \left(\frac{3}{4}\right)\left(\frac{u}{u^*_2}\right)^{1/2}\left[\frac{u^*_2}{(\Delta T^*_2)^{1/2}}\right]^{1/2}\left(\frac{\Delta T^*_2}{\text{RTI}}\right)\left(\frac{t}{t^*_2}\right)D$ Y = 1.37
13.	*Fixed Temperature HD* — Use the relationship for $T_d(t) - T_d(0)$ in equation B.3.3.4.3a to calculate the resulting temperature of the detector $T_d(t)$.	$T_d(t) = \left(\frac{\Delta T}{\Delta T^*_2}\right)\Delta T^*_2\left[1-\frac{(1-e^{-Y})}{Y}\right] + T_d(0)$ $T_d(t)$ = 41
14.	*Rate of Rise HD* — Use the relationship for $\frac{dT_d(t)}{dt}$ in equation B.3.3.4.3b.	$dT_d = \left[\left(\frac{4}{3}\right)\left(\frac{\Delta T}{\Delta T^*_2}\right)(\Delta T^*_2)^{1/4}\frac{(1-e^{-Y})}{[(t/t^*_2)D]}\right]dt$ dT_d =
15.	If: 1. $T_d > T_s$ 2. $T_d < T_s$ 3. $T_d = T$	Repeat Procedure Using Design: 1. a larger r; 2. a smaller r; 3. $s = 1.41 \times r$ = _____ m Analysis: 1. a larger t_r; 2. a smaller t_r; 3. t_r = _____ sec

FIGURE B.3.3.8.3.4 *Fire Detection Design and Analysis Worksheet [28] — Analysis Example 2.*

System Design Tip

The use of the *t*-squared model presumes sufficient fuel to permit the fire to grow according to the *t*-squared model. The designer should verify that the hazard provides sufficient fuel. Given that $Q = mH_c$, the designer can determine the required fuel load by integrating this relation over the time in question and then dividing by H_c. See the commentary following B.2.3.2.3.1.

B.3.3.8.5 Table B.3.3.8.5(a) through Table B.3.3.8.5(k) provide a comparison of heat release rates, response times, and spacings when variables characteristic of the fires, detectors, and room are changed from the analysis example.

Δ ***TABLE B.3.3.8.5(a)*** *Operating Temperature Versus Heat Transfer Rate [S = 9.1 m (30 ft)]*

Operating Temperature		Heat Release Rate/ Response Time	
°C	°F	kW/sec	Btu/sec/sec
57	135	2132/213	2022/213
74	165	2798/244	2654/244
93	200	3554/275	3371/275

TABLE B.3.3.8.5(b) *Operating Temperature Versus Spacing [Qd = 1000 kW (948 Btu/sec)]* Δ

Operating Temperature		Spacing	
°C	°F	m	ft
57	135	4.7	15.4
74	165	3.5	11.5
93	200	2.5	8.2

Δ ***TABLE B.3.3.8.5(c)*** *RTI Versus Heat Release Rate [S = 9.1 m (30 ft)]*

RTI		Heat Release Rate/ Response Time	
$m^{1/2}\ sec^{1/2}$	$ft^{1/2}\ sec^{1/2}$	kW/sec	Btu/sec/sec
50	93	1609/185	1526/185
150	280	2640/237	2504/237
300	560	3898/288	3697/288

TABLE B.3.3.8.5(d) *RTI Versus Spacing [Qd = 1000 kW (948 Btu/sec)]*

RTI		Spacing	
$m^{1/2}\ sec^{1/2}$	$ft^{1/2}\ sec^{1/2}$	m	ft
50	93	6.1	20.0
150	280	3.7	12.1
300	560	2.3	7.6

Δ ***TABLE B.3.3.8.5(e)*** *Ambient Temperature Versus Heat Release Rate [S = 9.1 m (30 ft)]*

Ambient Temperature		Heat Release Rate/ Response Time	
°C	°F	kW/sec	Btu/sec/sec
0	32	2552/233	2420/233
20	68	1751/193	1661/193
38	100	1058/150	1004/150

TABLE B.3.3.8.5(f) *Ambient Temperature Versus Spacing [Qd = 1000 kW (948 Btu/sec)]* Δ

Ambient Temperature		Spacing	
°C	°F	m	ft
0	32	3.8	12.5
20	68	5.7	18.7
38	100	8.8	28.9

Δ ***TABLE B.3.3.8.5(g)*** *Ceiling Height Versus Heat Release Rate [S = 9.1 m (30 ft)]*

Ceiling Height		Heat Release Rate/ Response Time	
m	ft	kW/sec	Btu/sec/sec
2.4	8	1787/195	1695/195
4.9	16	2358/224	2237/224
7.3	24	3056/255	2899/255

TABLE B.3.3.8.5(h) *Ceiling Height Versus Spacing [Qd = 1000 kW (948 Btu/sec)]*

Ceiling Height		Spacing	
m	ft	m	ft
2.4	8	5.8	19.0
4.9	16	4.0	13.1
7.3	24	2.1	6.9

Δ ***TABLE B.3.3.8.5(i)*** *Detector Spacing Versus Heat Release Rate [S = 9.1 m (30 ft)]*

Detector Spacing		*Heat Release Rate/ Response Time*	
m	*ft*	*kW/sec*	*Btu/sec/sec*
4.6	15	1000/146	949/146
9.1	30	2132/213	2022/213
15.2	50	4146/297	3932/297

TABLE B.3.3.8.5(j) *Fire Growth Rate Versus Heat Release Rate [S = 9.1 m (30 ft)]* Δ

Fire Growth Rate	*Heat Release Rate/ Response Time*	
	kW/sec	*Btu/sec/sec*
Slow t_g = 400 sec	1250/435	1186/435
Medium t_g = 250 sec	1582/306	1499/306
Fast t_g = 100 sec	2769/162	2626/162

TABLE B.3.3.8.5(k) *Fire Growth Rate Versus Spacing [Qd = 1000 kW (948 Btu/sec)]*

Fire Growth Rate	*Spacing*	
	m	*ft*
Slow, t_g = 400 sec	8.2	26.9
Medium, t_g = 250 sec	6.5	21.3
Fast, t_g = 100 sec	3.7	12.1

B.3.3.9 Rate-of-Rise Heat Detector Spacing.

B.3.3.9.1 The preceding procedure can be used to estimate the response of rate-of-rise heat detectors for either design or analysis purposes. In this case, it is necessary to assume that the heat detector response can be modeled using a lumped mass heat transfer model.

B.3.3.9.2 In step 3 of Figure B.3.3.4.4, Figure B.3.3.8, and Figure B.3.3.8.3.4, the user must determine the rate of temperature rise (dT_d/dt) at which the detector will respond from the manufacturer's data. [Note that listed rate-of-rise heat detectors are designed to actuate at a nominal rate of temperature rise of 8°C (15°F) per minute.] The user must use the relationship for $dT_d(t)/dt$ in Equation B.3.3.4.3b instead of the relationship for $T_d(t) - T_d(0)$ in Equation B.3.3.4.3a in order to calculate the rate of change of the detector temperature. This value is then compared to the rate of change at which the chosen detector is designed to respond.

NOTE: The assumption that heat transfer to a detector can be modeled as a lumped mass might not hold for rate-of-rise heat detectors. This is due to the operating principle of this type of detector, in that most rate-of-rise detectors operate when the expansion of air in a chamber expands at a rate faster than it can vent through an opening. To accurately model the response of a rate-of-rise detector would require modeling the heat transfer from the detector body to the air in the chamber, as well as the air venting through the hole.

B.3.3.10 Rate Compensation–Type Heat Detectors. Rate-compensated detectors are not specifically covered by Annex B. However, a conservative approach to predicting their performance is to use the fixed-temperature heat detector guidance contained herein.

B.4 Smoke Detector Spacing for Flaming Fires.

The performance-based design process for fire alarm systems is formally recognized as an alternative to designs developed using the prescriptive requirements of the Code. Calculations such as those outlined in Section B.4 represent an integral part of the performance-based design. However, performance-based design is a process, and the computational tools outlined in this section are intended to support the evaluation of candidate fire detection system designs.

System Design Tip

Designers should review Section 17.3 carefully before undertaking a design based on these computational methods. When undertaking a performance-based design, designers assume responsibility for the design assumptions offered to the other stakeholders, as well as the assessment of the implications of adopting such assumptions or criteria. This approach puts a greater burden of responsibility on the designer when compared to implementing the requirements of a prescriptive code.

B.4.1 Introduction.

B.4.1.1 The listing investigation for smoke detectors does not yield a "listed spacing" as it does for heat detectors. Instead, the manufacturers recommend a spacing. Because the largest spacing that can be evaluated in the full-scale fire test room is 7.6 m (25 ft), it has become common practice to recommend 9.1 m (30 ft) spacing for smoke detectors when they are installed on flat, smooth ceilings. Reductions in smoke detector spacing are made empirically to address factors that can affect response, including ceiling height, beamed or joisted ceilings, and areas that have high rates of air movement.

Chapter 17 addresses the effects of exposed joists and beams and provides prescriptive design requirements that are valid over the limitations stipulated in the text. The chapter also provides design requirements to address the effect of ceiling slope on a qualitative basis. The requisite research to develop quantitative design calculations for smoke detector spacings exceeding 9.1 m (30 ft) has not yet been performed.

B.4.1.2 The placement of smoke detectors, however, should be based on an understanding of fire plume and ceiling jet flows, smoke production rates, particulate changes due to aging, and the operating characteristics of the particular detector being used. The heat detector spacing information presented in Section B.3 is based on knowledge of plume and jet flows. An understanding of smoke production and aging lags considerably behind an understanding of heat production. In addition, the operating characteristics of smoke detectors in specific fire environments are not often measured or made generally available for other than a very few number of combustible materials. Therefore, the existing knowledge base precludes the development of complete engineering design information for smoke detector location and spacing.

System Design Tip

Designers should exercise caution when designing or analyzing the response of smoke detection systems. Currently available analytical methods do not account for variations in the composition of smoke, the effects of smoke aging, or the detection mechanism appropriate to different detection technologies.

B.4.1.3 In design applications where predicting the response of smoke detectors is not critical, the spacing criteria presented in Chapter 17 should provide sufficient information to design a very basic smoke detection system. However, if the goals and objectives established for the detection system require detector response within a certain amount of time, optical density, heat release rate, or temperature rise, then additional analysis might be needed. For these situations, information regarding the expected fire characteristics (fuel and its fire growth rate), transport characteristics, detector characteristics, and compartment characteristics is required. The following information regarding smoke detector response and various performance-based approaches to evaluating smoke detector response is therefore provided.

B.4.2 Response Characteristics of Smoke Detectors. To determine whether a smoke detector will respond to a given Q_{CR}, a number of factors need to be evaluated. These factors include smoke characteristics, smoke transport, and detector characteristics.

B.4.3 Smoke Characteristics.

B.4.3.1 Smoke characteristics are a function of the fuel composition, the mode of combustion (smoldering or flaming), and the amount of mixing with the ambient air (dilution). These factors are important for determining the characteristics of the products of combustion, such as particle size, distribution, composition, concentration, refractive index, and so on. The significance of these features with regard to smoke detector response is well documented. [29, 30]

B.4.3.2 Whether smoke detectors detect by sensing scattered light, loss of light transmission (light extinction), or reduction of ion current, they are particle detectors. Thus, particle concentration, size, color, size distribution, and so forth, affect each sensing technology differently. It is generally accepted that a flaming, well-ventilated, energetic fire produces smoke having a larger proportion of the sub-micron diameter particulates as opposed to a smoldering fire that produces smoke with a predominance of large, super-micron particulates. It is also known that as the smoke cools, the smaller particles agglomerate, forming larger ones as they age, and are carried away from the fire source. More research is necessary to provide sufficient data to allow the prediction of smoke characteristics at the source, as well as during transport. Furthermore, response models must be developed that can predict the response of a particular detector to different kinds of smoke as well as smoke that has aged during the flow from the fire to the detector location.

B.4.4 Transport Considerations.

B.4.4.1 All smoke detection relies on the plume and ceiling jet flows to transport the smoke from the locus of the fire to the detector. Various considerations must be addressed during this transport time, including changes to the characteristics of the smoke that occur with time and distance from the source, and transport time of smoke from the source to the detector.

B.4.4.2 The smoke characteristic changes that occur during transport relate mainly to the particle size distribution. Particle size changes during transport occur mainly as a result of sedimentation and agglomeration.

B.4.4.3 Transport time is a function of the characteristics of the travel path from the source to the detector. Important characteristics that should be considered include ceiling height and configuration (e.g., sloped, beamed), intervening barriers such as doors and beams, as well as dilution and buoyancy effects such as stratification that might delay or prevent smoke in being transported to the detector.

B.4.4.4 In smoldering fires, thermal energy provides a force for transporting smoke particles to the smoke sensor. However, usually in the context of smoke detection, the rate of energy (heat) release is small and the rate of growth of the fire is slow. Consequently, other factors such as ambient airflow from HVAC systems, differential solar heating of the structure, and wind cooling of the structure can have a dominant influence on the transport of smoke particles to the smoke sensor when low-output fires are considered.

B.4.4.5 In the early stages of development of a growing fire, the same interior environmental effects, including ambient airflow from HVAC systems, differential solar heating of the structure, and wind cooling of the structure, can have a dominant influence on the transport of smoke. This is particularly important in spaces having high ceilings. Greater thermal energy release from the fire is necessary to overcome these interior environmental effects. Because the fire must attain a sufficiently high level of heat release before it can overcome the interior environmental airflows and drive the smoke to the ceiling-mounted detectors, the use of closer spacing of smoke detectors on the ceiling might not significantly improve the response of the detectors to the fire. Therefore, when considering ceiling height alone, smoke detector spacing closer than 9.1 m (30 ft) might not be warranted, except in instances where an engineering analysis indicates additional benefit will result. Other construction characteristics also should

be considered. *(Refer to the appropriate sections of Chapter 17 dealing with smoke detectors and their use for the control of smoke spread.)*

B.4.5 Smoke Dilution. Smoke dilution causes a reduction in the quantity of smoke per unit of air volume of smoke reaching the detector. Dilution typically occurs either by entrainment of air in the plume or the ceiling jet or by effects of HVAC systems. Forced ventilation systems with high air change rates typically cause the most concern, particularly in the early stages of fire development, when smoke production rate and plume velocity are both low. Airflows from supply as well as return vents can create defined air movement patterns within a compartment, which can either keep smoke away from detectors that are located outside of these paths or can inhibit smoke from entering a detector that is located directly in the airflow path. [26]

There currently are no quantitative methods for estimating either smoke dilution or airflow effects on locating smoke detectors. These factors should therefore be considered qualitatively. The designer should understand that the effects of airflow become larger as the fire size at detection (Q_{CR}) gets smaller. Depending on the application, the designer might find it useful to obtain airflow and velocity profiles within the room or to even conduct small-scale smoke tests under various conditions to assist in the design of the system.

NIST first investigated the issues addressed in B.4.5 using the Harwell Flow 3D CFD model as part of the International Fire Detection Research Project.

B.4.6 Stratification.

B.4.6.1 The potential for the stratification of smoke is another concern in designing and analyzing the response of detectors. This is of particular concern with the detection of low-energy fires and fires in compartments with high ceilings.

B.4.6.2 The upward movement of smoke in the plume depends on the smoke being buoyant relative to the surrounding air. Stratification occurs when the smoke or hot gases flowing from the fire fail to ascend to the smoke detectors mounted at a particular level (usually on the ceiling) above the fire due to the loss of buoyancy. This phenomenon occurs due to the continuous entrainment of cooler air into the fire plume as it rises, resulting in cooling of the smoke and fire plume gases. The cooling of the plume results in a reduction in buoyancy. Eventually the plume cools to a point where its temperature equals that of the surrounding air and its buoyancy diminishes to zero. Once this point of equilibrium is reached, the smoke will cease its upward flow and form a layer, maintaining its height above the fire, regardless of the ceiling height, unless and until sufficient additional thermal energy is provided from the fire to raise the layer due to its increased buoyancy. The maximum height to which plume fluid (smoke) will ascend, especially early in the development of a fire, depends on the convective heat release rate of the fire and the ambient temperature in the compartment.

B.4.6.3 Because warm air rises, there will usually be a temperature gradient in the compartment. Of particular interest are those cases where the temperature of the air in the upper portion of the compartment is greater than at the lower level before the ignition. This can occur as a result of solar load where ceilings contain glazing materials. Computational methods are available to assess the potential for intermediate stratification for the following two cases, depicted in Figure B.4.6.3(a).

Case 1. The temperature of the ambient is relatively constant up to a height above which there is a layer of warm air at uniform temperature. This situation can occur if the upper portion of a mall, atrium, or other large space is unoccupied and the air is left unconditioned.

Case 2. The ambient interior air of the compartment has a constant and uniform temperature gradient (temperature change per unit height) from floor to ceiling. This case is generally encountered in industrial and storage facilities that are normally unoccupied.

The analysis of intermediate stratification is presented in Figure B.4.6.3(b). Plume centerline temperatures from two fires, 1000 kW (948 Btu/sec) and 2000 kW (1896 Btu/sec), are graphed based on estimates from correlations presented in this section. In Case 1, a step function is assumed to indicate a 30°C/m (16.5°F/ft) change in temperature 15 m (49.2 ft) above the floor due to the upper portion of the atrium being unconditioned. For Case 2, a temperature gradient of 1.5°C/m (0.82°F/ft) is arbitrarily assumed in an atrium that has a ceiling height of 20 m (65.6 ft).

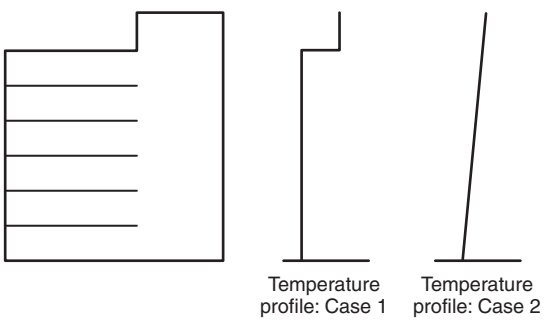

FIGURE B.4.6.3(a) *Pre-Fire Temperature Profiles.*

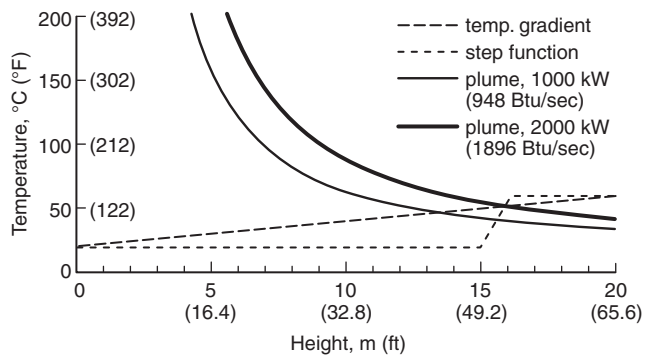

FIGURE B.4.6.3(b) *Indoor Air and Plume Temperature Profiles with Potential for Intermediate Stratification.*

B.4.6.3.1 Step Function Temperature Gradient Spaces. If the interior air temperature exhibits a discrete change at some elevation above the floor, the potential for stratification can be assessed by applying the plume centerline temperature correlation. If the plume centerline temperature is equal to the ambient temperature, the plume is no longer buoyant, loses its upward momentum, and stratifies at that height. The plume centerline temperature can be calculated by using the following equation:

$$T_c = 25\, Q_c^{2/3} z^{-5/3} + 20 \quad \text{(for SI units)} \qquad \textbf{[B.4.6.3.1a]}$$

$$T_c = 316\, Q_c^{2/3} z^{-5/3} + 70 \quad \text{(for inch-pound units)} \qquad \textbf{[B.4.6.3.1b]}$$

where:

T_c = plume centerline temperature (°C or °F)
Q_c = convective portion of fire heat release rate (kW or Btu/sec)
z = height above the top of the fuel package involved (m or ft)

B.4.6.3.2 Linear Temperature Gradient Spaces. To determine whether or not the rising smoke or heat from an axisymmetric fire plume will stratify below detectors, the following equation can be applied where the ambient temperature increases linearly with increasing elevation:

$$Z_m = 5.54\, Q_c^{1/4} \left(\frac{\Delta T_0}{dZ} \right)^{-3/8} \quad \text{(for SI units)} \qquad \textbf{[B.4.6.3.2a]}$$

or

$$Z_m = 14.7\, Q_c^{1/4} \left(\frac{\Delta T_0}{dZ} \right)^{-3/8} \quad \text{(for inch-pound units)} \qquad \textbf{[B.4.6.3.2b]}$$

where:

Z_m = maximum height of smoke rise above the fire surface (m or ft)

ΔT_0 = difference between the ambient temperature at the location of detectors and the ambient temperature at the level of the fire surface (°C or °F)

Q_c = convective portion of the heat release rate (kW or Btu/sec)

B.4.6.3.2.1 The convective portion of the heat release rate (Q_c) can be estimated as 70 percent of the heat release rate.

B.4.6.3.2.2 As an alternative to using the noted expression to directly calculate the maximum height to which the smoke or heat will rise, Figure B.4.6.3.2.2 can be used to determine Z_m for given fires. Where Z_m, as calculated or determined graphically, is greater than the installed height of detectors, smoke or heat from a rising fire plume is predicted to reach the detectors. Where the compared values of Z_m and the installed height of detectors are comparable heights, the prediction that smoke or heat will reach the detectors might not be a reliable expectation.

B.4.6.3.2.3 Assuming the ambient temperature varies linearly with the height, the minimum Q_c required to overcome the ambient temperature difference and drive the smoke to the ceiling ($Z_m = H$) can be determined from the following equation:

$$Q_c = 0.0018 H^{5/2} \Delta T_0^{3/2} \quad \text{(for SI units)} \qquad \textbf{[B.4.6.3.2.3a]}$$

or

$$Q_c = 2.39 \times 10^{-5} H^{5/2} \Delta T_0^{3/2} \quad \text{(for inch-pound units)} \qquad \textbf{[B.4.6.3.2.3b]}$$

Note that the variables are identified in Section B.7.

B.4.6.3.2.4 The theoretical basis for the stratification calculation is based on the works of Morton, Taylor, and Turner [15] and Heskestad [9]. For further information regarding the derivation of the expression defining Z_m, the user is referred to the work of Klote and Milke [13] and NFPA 92.

B.4.7 Detector Characteristics.

This section applies primarily to spot-type smoke detectors. Although some content might also apply to projected beam–type or air sampling–type smoke detectors, B.4.7 does not include a detailed discussion

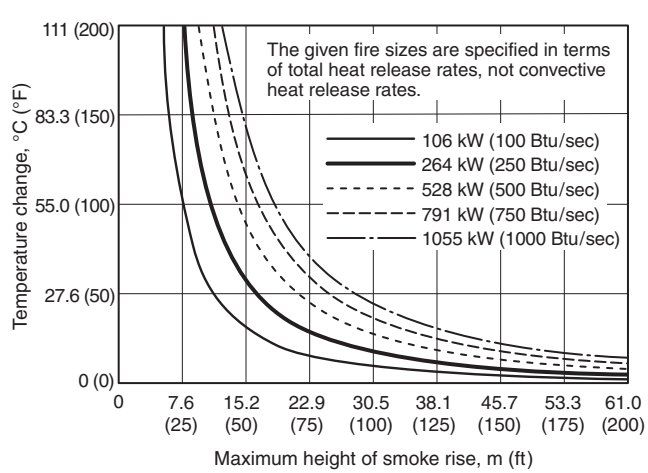

FIGURE B.4.6.3.2.2 *Temperature Change and Maximum Height of Smoke Rise for Given Fire Sizes.*

of those types of detectors. (The original International Fire Detection Research Project did not include projected beam–type and air sampling–type smoke detectors.)

B.4.7.1 General. Once smoke is transported to the detector, additional factors become important in determining whether response will occur. These include the aerodynamic characteristics of the detector and the type of sensor within the detector. The aerodynamics of the detector relate to how easily smoke can pass through the detector housing and enter the sensor portion of the unit. Additionally, the location of the entry portion to the sensor with respect to the velocity profile of the ceiling jet is also an important factor. Finally, different sensing methods (e.g., ionization or photoelectric) will respond differently, depending on the smoke characteristics (smoke color, particle size, optical density, and so forth). Within the family of photoelectric devices, there will be variations depending on the wavelengths of light and the scattering angles employed. The following paragraphs discuss some of these issues and various calculation methods.

B.4.7.2 Resistance to Smoke Entry.

B.4.7.2.1 All spot-type smoke detectors require smoke to enter the detection chamber in order to be sensed. This requires additional factors to be taken into consideration when attempting to estimate smoke detector response, as smoke entry into the detection chamber can be affected in several ways, for example, insect screens, sensing chamber configuration, and location of the detector with respect to the ceiling.

Refer to 17.7.3.6.1 regarding smoke entry into the sampling ports of an air sampling–type detector. The International Fire Detection Research Project considered an issue directly related to air sampling–type detectors when it evaluated the flow velocity field in the immediate vicinity of the sampling port. This research showed that the sampling port does not produce the effect of drawing the smoke up to the sampling port from lower in the compartment. Consequently, air sampling–type detectors rely either on ambient air currents or on the fire plume and ceiling jet as much as spot-type smoke detectors do.

B.4.7.2.2 In trying to quantify this, Heskestad [32] developed the idea of smoke detector lag to explain the difference in optical density outside (D_{ur}) versus inside (D_{uo}) of a detector when the detector actuates. It was demonstrated that this difference could be explained by the use of a correction factor D_{uc} using the following relationship:

$$D_{uc} = \frac{L\dfrac{d(D_u)}{dt}}{V} \qquad \textbf{[B.4.7.2.2]}$$

where:

L	=	characteristic length for a given detector design, represents the ease of smoke entry into the sensing chamber
$d(D_u)/dt$	=	rate of increase of optical density outside the detector
V	=	velocity of the smoke at the detector

B.4.7.2.3 Various studies regarding this correlation have provided additional insight regarding smoke entry and associated lags [33, 34, 34a, 34b, 34c, 34d, 34e]; however, the difficulty in quantifying L for different detectors and relating it to spacing requirements can have limited usefulness, and the concept of critical velocity (u_c) could be more applicable. [21]

B.4.7.3 Critical Velocity. A smoke detector's critical velocity refers to the minimum velocity of the smoke necessary to enter the sensing chamber to cause an alarm without significant delays due to smoke entry lag. Alarms can occur at velocities less than the critical velocity value, but their response can be delayed or require greater smoke concentrations than would normally be necessary. Flow across a detector causes a pressure differential between

the upstream and downstream sides of the detector. This pressure differential is the principal driving force for the smoke entering the unit.

Experimental work has indicated that the critical velocity is approximately 0.15 m/sec (0.49 ft/sec) for the ionization detectors tested in one particular study. [21] Once velocities were reduced below this level, the smoke concentration level outside the detector before an alarm condition increased dramatically when compared to smoke concentration levels when the velocity was above the critical value. Another study found that measured velocities at the time of alarm for ionization and photoelectric detectors in full-scale flaming fire tests generally supported this velocity value, with a mean value of 0.13 m/sec (0.43 ft/sec) and a standard deviation of 0.07 m/sec (0.23 ft/sec) [46]. Estimating the critical velocity can therefore be useful for design and analysis.

It is interesting to note that this critical velocity value (0.15 m/sec or 0.49 ft/sec) is close to that at which a smoke detector must respond in the UL smoke detector sensitivity chamber in order to become listed. [35] The location in the ceiling jet where this velocity occurs for a given fire and ceiling height might therefore be considered as a first approximation for locating detectors. This again assumes a horizontal, smooth ceiling. Care should also be taken when using this correlation, such that consideration is given to potential effects of coagulation and agglomeration, and settling of the smoke within the ceiling jet as it moves away from the fire source and loses its buoyancy. The velocity for smoke entry might be present, but the concentration of smoke might not be sufficient to actuate the detector.

The need for a sufficient flow of smoke past a spot-type smoke detector to overcome the resistance to entry to the detection chamber is an important factor for smoke detector activation. The phenomenon characterized as smoke entry lag was studied by Brozovski [1991], who established a critical velocity of approximately 0.15 m/sec (0.49 ft/sec) below which it was postulated that smoke detector response can be delayed. Annex B suggests using the critical velocity approach as a means of estimating the response of smoke detectors. Geiman [2003] reviewed a series of full-scale U.S. Navy tests from which only 50 smoke detector alarms were available with velocity data and performed a velocity threshold analysis against a database of full-scale tests. Commentary Table B.1 provides a statistical analysis of the available velocity magnitude data at the time of alarm with flaming fires.

Geiman's review of data is summarized in the following excerpt from his 2003 work:

> For flaming fires, the velocity at alarm values (in units of m/s) are 0.07, 0.12, and 0.21 for the 20th, 50th, and 80th percentiles of the population respectively, with the arithmetic mean value equal to 0.13 with a standard deviation of 0.07. [. . .] 67 percent of alarms during flaming fire tests occurred at or below 0.15 m/s. This result highlights the fact that although it has been termed a "critical velocity," alarms, in this case a majority of them, occur at velocities less than this value.

Based on Geiman's [2003] work, the use of velocity threshold does have merit for analysis of flaming fires, although not with the same degree of certainty as expected with temperature rise and optical density criteria.

COMMENTARY TABLE B.1 *Statistical Analysis of Velocity Magnitude (m/sec) at Time of Alarm with Flaming Fires*

Fire Type	*Detector Type*	*Nominal Sensitivity Optical Density*	*Nominal Sensitivity % Obscuration*	*Velocity 20% of Detectors Alarmed*	*Velocity 50% of Detectors Alarmed*	*Velocity 80% of Detectors Alarmed*	*Mean*	*Std Dev*	*Count*
Flaming	Ion	0.019 m^{-1}	1.3 ft^{-1}	0.07	0.10	0.20	0.13	0.07	9
Flaming	Ion	0.023 m^{-1}	1.6 ft^{-1}	0.05	0.11	0.20	0.12	0.08	8
Flaming	Photo	0.036 m^{-1}	2.5 ft^{-1}	0.09	0.12	0.23	0.15	0.09	7
Flaming	Photo	0.051 m^{-1}	3.5 ft^{-1}	0.08	0.12	0.14	0.12	0.07	6

Source: Based on Geiman [2003].

B.4.7.4 Response to Smoke Color. Smoke detectors that use an optical means to detect smoke respond differently to smokes of different colors.

B.4.7.4.1 Manufacturers currently provide limited information regarding the response of smoke detectors in their specifications as well as in the information contained on the labels on the backs of the detectors. This response information indicates only their nominal response values with respect to gray smoke, not to black, and is often provided with a response range instead of an exact response value. This range is in accordance with ANSI/UL 268, *Standard for Smoke Detectors for Fire Alarm Systems*.

The sensitivity marked on the smoke detector label is part of the manufacturing quality monitoring protocols. The marking is not intended to be — nor can it be — used as a basis of design. See A.17.7.2 and the commentary that follows it.

System Design Tip

B.4.7.4.2 The response ranges allowable by UL for gray smoke are shown in Table B.4.7.4.2. Older editions of ANSI/UL 268 contained response ranges for black smoke and are also shown for comparison.

Δ ***TABLE B.4.7.4.2*** *ANSI/UL 268 Smoke Detector Test Acceptance Criteria for Different Colored Smoke [35]*

Color of Smoke	*Acceptable Response Range*	
	%/m	*%/ft*
Gray	1.6–12.5	0.5–4.0
Black	5.0–29.2	1.5–10.0

ANSI/UL 268, *Standard for Smoke Detectors for Fire Alarm Systems,* no longer requires the black smoke test during the listing investigation. The values for black smoke shown in Table B.4.7.4.2 reflect the criteria in older editions. Consequently, designers using current products do not know how much the detector's sensitivity is affected by the differences in smoke color. No basis has been found to assume that black smoke performance has improved over what is presented in Table B.4.7.4.2.

System Design Tip

B.4.7.4.3 Detectors respond at different optical density levels to different fuels and different types of smoke. Examples of this are shown in Table B.4.7.4.3, which contains values of optical density at response recommended by Heskestad and Delichatsios [10] based on their test.

TABLE B.4.7.4.3 *Values of Optical Density at Response for Flaming Fires [18]*

	Optical Density at Response				
	$D_{ur}(m^{-1})$		*$D_{ur}(ft^{-1})$*		*Relative Smoke Color*
Material	*Ionization*	*Photoelectric*	*Ionization*	*Photoelectric*	
Wood crib	0.016	0.049	0.005	0.015	Light
Cotton fabric	0.002	0.026	0.0005	0.008	Light
Polyurethane foam	0.164	0.164	0.05	0.05	Dark
PVC	0.328	0.328	0.1	0.1	Dark
Variation			200:1	12.5:1	

Note the large variations in response not only to materials producing relatively the same color of smoke but also to smoke of different color, which is much more pronounced. Also

note that there was variation in the optical density at response values for a given material in the test conducted by Heskestad and Delichatsios, which is not shown in Table B.4.7.4.3. The values cited in Table B.4.7.4.3 are provided as an example of the variation in optical density at response, but these values are not necessarily appropriate for all analyses. For example, the results presented for polyurethane and PVC involved relatively large, rapidly developing fires, and fires with smaller growth rates could result in smaller values of optical density at response [10]. More information on the variation of optical density at response is available from Geiman and Gottuk [48] and Geiman [46].

B.4.7.5 Optical Density and Temperature. During a flaming fire, smoke detector response is affected by ceiling height and the size and rate of fire growth in much the same way as heat detector response. The thermal energy of the flaming fire transports smoke particles to the sensing chamber just as it does heat to a heat sensor. While the relationship between the amount of smoke and the amount of heat produced by a fire is highly dependent on the fuel and the way it is burning, research has shown that the relationship between temperature and the optical density of smoke remains somewhat constant within the fire plume and on the ceiling in the proximity of the plume.

B.4.7.5.1 These results were based on the work by Heskestad and Delichatsios [10] and are indicated in Table B.4.7.5.1. Note that for a given fuel, the optical density to temperature rise ratio between the maximum and minimum levels is 10 or less.

B.4.7.5.2 In situations where the optical density at detector response is known and is independent of particle size distribution, the detector response can be approximated as a function of the heat release rate of the burning fuel, the fire growth rate, and the ceiling height, assuming that the preceding correlation exists.

B.4.7.5.3 When Appendix C of NFPA 72E) [58] was first published in 1984, a 13°C (20°F) temperature rise was used to indicate detector response. Schifiliti and Pucci [18] have combined some of the data from Heskestad and Delichatsios [10] to produce Table B.4.7.5.3 showing the temperature rise at detector response. Note that the temperature rise associated with detector response varies significantly depending on the detector type and fuel.

Also note that the values in Table B.4.7.5.3 are not based on temperature measurements taken at the detector response times, but were calculated by Heskestad and Delichatsios [10] from their recommended values of optical density at response (Table B.4.7.4.3) and their recommended ratios of optical density to temperature rise (Table B.4.7.5.1).

Δ ***TABLE B.4.7.5.1*** *Ratio of Optical Density to Temperature Rise*

	$D_u/\Delta T$ [(m°C)$^{-1}$]		$D_u/\Delta T$ [(ft°F)$^{-1}$]		
Material	***Representative Value***	***Value Range***	***Representative Value***	***Value Range***	***Maximum: Minimum***
Wood (sugar pine, 5% moist)	1.20E-03	8.9E-4–3.2E-3	2.00E-04	1.5E–5.5E-4	3.7:1
Cotton (unbleached muslin fabric)	5.9E-4/1.2E-3	3.0E-4–1.8E-3	1.0E-04/2.0–4	5.0E-5–3.0E-4	6:1
Paper (in trash can)	1.80E-03	Data not available	3.00E-04	Data not available	—
Polyurethane foam	2.40E-03	1.2E-2–3.2E-2	4.00E-04	2.0E-3–5.5E-3	2.8:1
Polyester fiber (bed pillow)	1.80E-02	Data not available	5.0E-3/1.0E-2	Data not available	—
PVC (wire insulation)	3.0E-2/5.9E-2	5.9E-3–5.9E-2	3.00E-03	1.0E-3–1.0E-2	10:1
Foam rubber PU (sofa cushion)	7.70E-02	Data not available	1.30E-02	Data not available	—
Average	2.10E-02	3.0E-4–7.7E-2	3.60E-03	5.0E-05–1.3E-2	260:1

TABLE B.4.7.5.3 *Temperature Rise for Detector Response [18]*

Material	*Ionization Temperature Rise*		*Scattering Temperature Rise*	
	°C	*°F*	*°C*	*°F*
Wood	13.9	25	41.7	75
Cotton	1.7	3	27.8	50
Polyurethane	7.2	13	7.2	13
PVC	7.2	13	7.2	13
Average	7.8	14	21.1	38

Several experimental studies have cited temperature rises at detection as low as 1°C to 3°C (1.8°F to 5.4°F). Of particular note, Geiman [46] found that for flaming fires, 80 percent of the ionization detectors examined in full-scale smoke detection tests alarmed at measured temperature rises less than or equal to 3°C (5.4°F).

The original report by Heskestad and Delichatsios [1977] did not specifically advance the idea of a fixed correlation between temperature increase and optical density. Other researchers, referencing the Heskestad and Delichatsios research, concluded that a correlation must exist, and 13°C (20°F) became the default value for a number of fire modeling programs [Evans and Stroup, 1986; Schifiliti and Pucci, 1996]. Values closer to 2°C to 5°C (3.6°F to 9°F) produce much more realistic expectations. However, these are response estimates and are subject to wide margins of error based on temperature conditions in the compartment, fuel, fuel moisture content, ventilation, and a host of detector-related variables.

B.4.8 Methods for Estimating Smoke Detector Response.

B.4.8.1 General. There are various methods to estimate smoke detector response. Research is still needed in this area to reflect smoke production, transport to the detector, response of the detector, and performance metrics of the smoke detector. Designers should be aware of the advantages and disadvantages, as well as limitations, of these methods and undertake sensitivity analyses and use of multiple methods where applicable.

B.4.8.1.1 Method 1 — Optical Density Versus Temperature.

B.4.8.1.2 The following example is intended to determine whether an existing fire detection system can detect a fire in part of a warehouse used to store wardrobes in sufficient time to prevent radiant ignition of adjacent wardrobes. The area under review has a large, flat ceiling, 5 m (16.5 ft) high. The ambient temperature within the compartment is 20°C (68°F). The compartment is not sprinklered. The wardrobes are constructed mainly of particleboard. The detectors are ionization-type smoke detectors spaced 6.1 m (20 ft) on center. The design objective is to keep the maximum heat release rate (Q_{DO}) below 2 MW (1897 Btu/sec) in order to ensure that radiant ignition of the wardrobes in the adjacent aisle will not occur. There is an on-site fire brigade that can respond to and begin discharging water on the fire within 90 seconds of receiving the alarm. It can be assumed that there are no other delays between the time the detector reaches its operating threshold and the time to notification of the fire brigade. Given this information, would the existing system be sufficient?

B.4.8.1.3 The following assumptions are made for this example:

$$\alpha = 0.047\ \text{kW/sec}^2 \quad \left(0.044\ \text{Btu/sec}^3\right) \qquad \textbf{[B.4.8.1.3]}$$

$$\text{RTI} = 25\ \text{m}^{1/2}\text{sec}^{1/2}\left(45\ \text{ft}^{1/2}\text{sec}^{1/2}\right)$$

Temperature rise for response = 14°C (25°F)

Refer to Table B.4.7.5.3 for temperature rise to response of an ionization smoke detector for a wood fire.

B.4.8.1.4 Using the power law equation, the design objective response time is calculated as follows:

$$Q_{DO} = \alpha t_{DO}^2 \qquad \textbf{[B.4.8.1.4a]}$$

$$2000 \text{ kW} = 0.047 \text{ kW/sec}^2 (t_{DO}^2)$$

$$t_{DO} = 210 \text{ sec}$$

or

$$1897 \text{ Btu/sec} = 0.044 \text{ Btu/sec}^3 (t_{DO}^2) \qquad \textbf{[B.4.8.1.4b]}$$

$$t_{DO} = 210 \text{ sec}$$

B.4.8.1.5 Next, subtract the time for the fire brigade to respond to determine what time after ignition that detection should occur. Note that a 30-second safety factor has been added to the fire brigade's response time.

$$t_{CR} = 210 \text{ sec} - 120 \text{ sec} = 90 \text{ sec} \qquad \textbf{[B.4.8.1.5]}$$

B.4.8.1.6 Then calculate the critical heat release rate at which detection should occur as follows:

$$Q_{CR} = \alpha t_{CR}^2 \qquad \textbf{[B.4.8.1.6a]}$$

$$Q_{CR} = 0.047 \text{ kW/sec}^2 (90 \text{ sec})^2 = 380 \text{ kW} \qquad \textbf{[B.4.8.1.6b]}$$

or

$$Q_{CR} = 0.044 \text{ Btu/sec}^3 (90 \text{ sec})^2 = 360 \text{ Btu/sec}$$

System Design Tip

Although the assumptions in B.4.8.1.3 use a 14°C (25°F) temperature rise correlation, this is not intended to suggest that 14°C (25°F) should be used. Many designers use values between 2°C and 5°C (3.6°F and 9°F) for smoke detector response estimates. To determine if the results inordinately rely on specific parameter values, the designer should perform a sensitivity analysis on pertinent variables used in this analysis. For example, considerable variation exists in the response range of the detectors. The value range column in Table B.4.7.5.1 illustrates this variation.

B.4.8.1.7 Using the numbers in the fire detection design and analysis worksheet at 90 seconds into the fire when the heat release rate is 380 kW (360 Btu/sec), the temperature rise at the detector is calculated to be approximately 17°C (30.6°F). This, therefore, might be a reasonable approximation to show that the detector might respond.

B.4.8.2 Method 2 — Mass Optical Density.

B.4.8.2.1 Data regarding smoke characteristics for given fuels can be used as another method to evaluate detector response.

B.4.8.2.2 The following example is provided.

The design objective established for this scenario is to detect the smoke from a flaming 400 g (1.0 lb) polyurethane chair cushion in less than 2 minutes. The chair is placed in a compartment that is 40 m^2 (431 ft^2). The ceiling height is 3.0 m (10 ft). It has been determined that the burning rate of the cushion is a steady rate of 50 g/min (0.09 lb/min). Determine whether the design objective will be met.

B.4.8.2.3 The total mass loss of the cushion due to combustion at 2 minutes is 100 g (0.22 lb). Therefore, the optical density in the room produced by the burning cushion can be calculated from the following equation: [5]

$$D = \frac{D_m M}{V_c} \qquad \textbf{[B.4.8.2.3]}$$

where:

D_m = mass optical density (m^2/g) [26]
M = mass (g)
V_c = volume of the compartment
D = $[(0.22\ m^2/g)(100\ g)]/(40\ m^2)(3\ m) = 0.183\ m^{-1}$

or where:

D_m = mass optical density (ft^2/lb) [26]
M = mass (lb)
V_c = volume of the compartment
D = $[(1075\ ft^2/lb)(0.22\ lb)]/(431\ ft^2)(9.8\ ft) = 0.056\ ft^{-1}$

B.4.8.2.4 If it is assumed that the detector responds at an optical density of 0.15 m^{-1} (0.046 ft^{-1}), the maximum black smoke optical density allowed in a previous edition of the ANSI/UL 268 sensitivity test [35], it can be assumed that the detector will respond within 2 minutes.

The conversion from percent obscuration (O), measured in percent per foot, to obscuration, measured in m^{-1}, is not a simple one. The obscuration of 0.15 m^{-1} (10 percent per foot) is the upper limit for black smoke.

Percent obscuration, O, is obtained from

$$O = 100\ (1 - I/I_0)$$

where:

I = light intensity received by the photocell in the presence of smoke
I_0 = intensity received by the photocell in clear air

Percent obscuration per unit of distance, O_u, is obtained from

$$O_u = 100\ [1 - (I/I_0)^{1/L}]$$

where L = distance over which the obscuration was measured.

Optical density, D, is a different measurement and is obtained from

$$D = \log_{10}(I_0/I) = -\log_{10}(I/I_0)$$

Optical density per unit of distance, D_u, also called *obscuration,* is obtained from

$$D_u = D/L = (1/L) \cdot \log_{10}(I_0/I) = -(1/L) \cdot \log_{10}(I/I_0)$$

Thus, D_u has units of m^{-1}.

B.4.8.2.5 It should be noted that this method presents a very simplified approach, and that various assumptions would need to be made including that the smoke is confined to the room, is well mixed, can reach the ceiling, and can enter the detector.

B.4.8.2.6 The preceding estimation assumes that the smoke is evenly distributed throughout the entire compartment volume. This is rarely the case but establishes a very conservative limit. For design purposes, one can model the smoke layer as a cylindrical volume centered about the fire plume having a depth equivalent to the ceiling jet thickness or some multiple of it. Refer to Figure B.4.8.2.6.

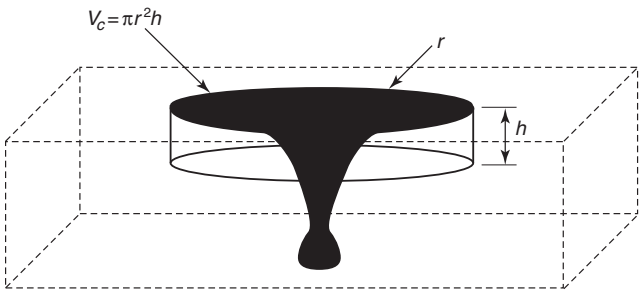

FIGURE B.4.8.2.6 *Smoke Layer Volume Model.*

The volume of the cylinder can now be used as the solution volume:

$$D = \frac{D_m M}{V_c} \qquad \textbf{[B.4.8.2.6a]}$$

is used with the substitution of

$$V_c = \pi r^2 h \qquad \textbf{[B.4.8.2.6b]}$$

To obtain the maximum radius from the fire plume center-line at which detector response is expected, the nominal 0.14 m^{-1} optical density criterion is substituted into the relation and an explicit relation for r is obtained,

$$r = \left(\frac{D_m M}{0.14 \pi h}\right)^{1/2} \qquad \textbf{[B.4.8.2.6c]}$$

Note that the results of this calculation are highly dependent upon the assumed layer thickness, h. The designer must carefully document the value used for the ceiling jet thickness for this reason. This method does not assume any minimum velocity across the detector, nor does it provide for any delay due to smoke entry. Finally, it assumes uniform smoke concentration throughout the solution volume. Failure to use prudently selected values for ceiling jet thickness and use of this relation outside the limitations imposed by the assumptions can lead to invalid designs.

The use of a cylindrical volume solution is valid only for cases where response is expected before the ceiling jet impinges on a compartment wall. Once the ceiling jet impinges on a wall, the ceiling jet begins to deepen. Under these circumstances, the user should modify the equation to use a rectilinear volume rather than a cylindrical volume for the solution volume, V_c.

Also, although it is customary to deem that the ceiling jet occupies a depth of approximately 10 percent of the floor-to-ceiling thickness, use of that thickness in this response estimation leads to very optimistic results. More realistic results are obtained when a ceiling jet thickness of 20 percent to 25 percent of the floor-to-ceiling height is assumed.

B.4.8.2.7 The mass optical density method also enables the designer to analyze existing systems. When we accept the assumption that smoke detectors listed by UL will respond at an optical density of 0.14 m^{-1}, we can write the relation:

$$D_A = 0.14 = \frac{D_m M}{V_c} \qquad \textbf{[B.4.8.2.7a]}$$

and thus

$$M = D_A \pi r^2 h / D_m \qquad \textbf{[B.4.8.2.7b]}$$

for a cylindrical solution volume.

Since $H(t) = M\Delta H_c$ and $H(t) = (\alpha t^3)/3$, we can write the relation

$$M = \frac{(\alpha t^3)}{3\Delta H_c} \qquad \textbf{[B.4.8.2.7c]}$$

Substituting, this leads to the relation

$$\frac{(\alpha t^3)}{3\Delta H_c} = \frac{D_A \pi r^2 h}{D_m} \qquad \textbf{[B.4.8.2.7d]}$$

This relation is reorganized to be explicit in t,

$$t = \left(\frac{3D_A \pi r^2 h \Delta H_c}{\alpha D_m}\right)^{1/3} \qquad \textbf{[B.4.8.2.7e]}$$

This time estimate must be corrected for the lag time produced by the resistance to smoke entry of the detector. Currently, this time delay, which is a function of detector design and ceiling jet velocity, is not quantified in the listing process. Consequently, the designer must make an estimate of the time delay due to smoke entry, t_e. Thus, the response time estimate becomes:

$$t = \left(\frac{3D_A \pi r^2 h \Delta H_c}{\alpha D_m}\right)^{1/3} + t_e \qquad \textbf{[B.4.8.2.7f]}$$

This relation predicts the time at which the mass optical density attains the detector alarm threshold in the solution volume derived from the detector spacing and an assumed ceiling jet thickness. Again, the results of this calculation are highly dependent upon the assumed ceiling jet layer thickness. However, once time, t, is known, if the fire can be characterized as a t-square fire, the fire size can be calculated from the relation

$$Q = \alpha t^2 \qquad \textbf{[B.4.8.2.7g]}$$

Consequently, substitution of this relation into the preceding relation yields the final analytical relation for the heat release rate at alarm, Q_a:

$$Q_a = \alpha\left[\left(\frac{3D_A \pi r^2 h \Delta H_c}{\alpha D_m}\right)^{1/3} + t_e\right]^2 \qquad \textbf{[B.4.8.2.7h]}$$

This relation provides an estimate of detector response subject to the assumptions and values selected or the relevant parameters. The estimate can be no better than the data used to generate it.

See the commentary following B.4.8.2.6 regarding the use of a cylindrical volume solution.

B.4.8.3 Critical Velocity Method. Research shows that a minimum critical velocity is necessary before smoke can enter the sensing chamber of the smoke detector. *(See B.4.7.3.)* This method assumes that, if this critical velocity has been attained, sufficient smoke concentration is in the ceiling jet gas flow to produce an alarm signal. Ceiling jet velocity correlations exist for steady-state fires, not t-square fires. However, a t-square fire can be modeled as a succession of steady-state fires for slow and medium growth rate fires. In the UL smoke box test, the minimum flow velocity at the detector is 0.152 m/sec (30 ft/minute). The correlation

$$\frac{0.195\left(Q^{1/3}H^{1/2}\right)}{r^{5/6}} \quad \text{for} \quad r/h \geq 0.15 \qquad \textbf{[B.4.8.3a]}$$

is used. U_r is set to equal 0.152 m/sec. With this substitution the relation becomes:

$$r \leq \left(1.28 Q_c^{1/3} H^{1/2}\right)^{6/5} \qquad \textbf{[B.4.8.3b]}$$

This relation is solved to obtain the maximum distance between the fire plume centerline and the detector at which the critical jet velocity is expected to be obtained for the given convective heat release rate and ceiling height.

This critical velocity method is derived from correlations that were developed for steady-state fires. Consequently, response estimates based on this critical velocity relation tend to overestimate response when used for *t*-squared fires. The error becomes very large as the fire growth rate increases. Furthermore, this method does not take into account the changes in smoke concentration and content as the smoke ages during flow from the plume toward the detector. The smoke is cooling due to expansion and cool air entrainment. This cooling causes the condensation of gas constituents into liquid droplets and the coagulation of solid particles into aggregates. These changes in the constitution of the smoke can reduce the effective concentration and affect the ability of the detector to detect the smoke particulate that eventually arrives at the detector. For these reasons, the critical velocity method is the least credible of the three response estimations available for smoke detectors.

B.4.9 Projected Beam Smoke Detection.

B.4.9.1 Projected beam smoke detection is often used in large open spaces with high ceilings where the use of spot-type detectors is impractical due to the problems of smoke stratification. In these spaces, there is questionable basis for the use of the prescriptive spacings presented in Section 17.7. However, beams can be installed such that, regardless of the fire origin, the plume will intersect at least one beam. To employ this strategy, the plume divergence is calculated as a function of the altitude at which the projected beam detectors are installed. The region of relatively uniform temperature and smoke density in a buoyant plume diverges at an angle of approximately 22 degrees, as shown in Figure B.4.9.1.

Another method involves assessing the smoke obstruction through the plume to determine the reduction in light from the receiver to the transmitter of the beam-type smoke detector to determine whether the detector might respond. [47]

B.4.10 Effects of HVAC Systems. The requirement to address the effects of HVAC systems on the performance of smoke detectors was historically reduced to a "3-foot rule." However, research conducted under the auspices of the Fire Protection Research Foundation showed that such a simple rule was not adequate in many cases.

Theoretically, the effect of HVAC flows on the performance of smoke detectors can be implemented by calculating the flow velocity and smoke concentration at the detector as a

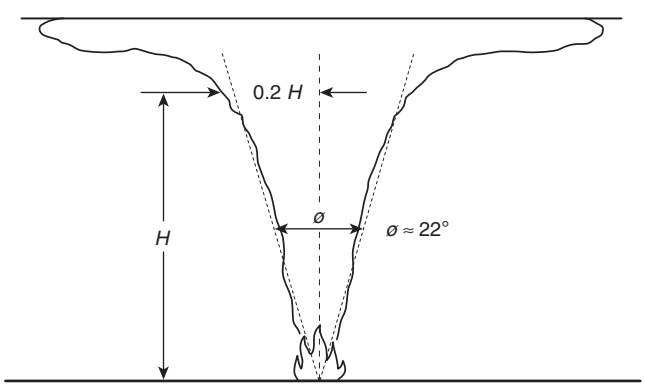

Δ ***FIGURE B.4.9.1*** *The Plume Divergence of an Unconstrained Fire.*

function of fire growth and HVAC operating parameters. With complex ceilings this often requires the use of computational fluid dynamics models running in computers. One such model is FDS, developed and supported by NIST.

However, for simple, planar ceilings at heights customarily encountered in conventional construction, the effects of HVAC system can be estimated using a simplified calculation derived from well-known correlations to identify where a problem is likely. These simple calculations are not a substitute for a fully modeled scenario, but they provide the advantage of being easily executed in a short time frame.

Ceiling-mounted HVAC system supply and return registers are designed to produce specific airflow patterns. The exact shape of the velocity and flow volume profiles is determined by the physical design of the register. A commercially available register might exhibit a flow profile as shown in Figure B.4.10.

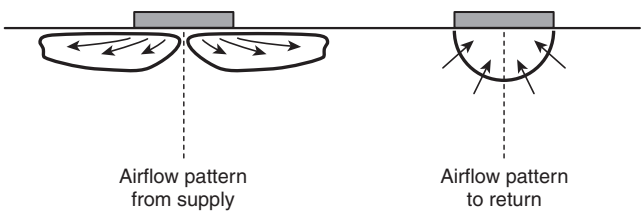

FIGURE B.4.10 *Typical HVAC Flow Patterns in Mercantile and Business Occupancies.*

This section considers two cases. The first is where the ceiling jet is being acted upon by an HVAC system supply. The second is where the ceiling jet is being acted upon by an HVAC system return. Each case is considered in its bounding value condition to provide a worst-case estimate of the resulting velocity at the detector.

In the first case, the flow of air from the ceiling supply can divert, impede, and dilute the ceiling jet flow, retarding detector response. This effect can be estimated using a one-dimensional vector analysis of the velocity produced by the HVAC system versus that produced by the fire. The velocity profile produced by the HVAC supply register is determined by the design of the register and the flow volume supplied to it. The velocity at the detector produced by the fire is an artifact of the ceiling jet. The sum of these two velocities versus the minimum velocity for response can be used to determine if sufficient ceiling jet velocity exists at the detector to initiate an alarm.

In the second case, the HVAC return pulls air up from lower elevations in the compartment, diluting the smoke density in the ceiling jet in the vicinity of the HVAC return. This case is much more difficult to evaluate because it implies a flow volume analysis to determine when the flow to ceiling-mounted HVAC returns will distort the concentration profile of the ceiling jet to the point that it adversely affects detector response. Unfortunately, the listings of smoke detectors do not include an explicit measurable value for detector sensitivity in terms that can relate to the design fire.

B.4.10.1 Effects of HVAC Ceiling Supply Registers. This method makes use of the finding that there is a critical minimum velocity necessary for reliable smoke detector response. The use of the 30 ft/min (0.15 m/sec) flow velocity in the UL 268 and 217 smoke detector sensitivity test for spot-type smoke detectors has led to the evolution of spot-type smoke detectors that are optimized for that flow velocity. In listing investigations, it has been learned that when the ceiling jet velocity is less than the nominal 30 ft/min (0.15 m/sec) commercially available, listed spot-type smoke detector, performance begins to suffer. *(See B.4.7.3.)*

For the prediction of spot-type smoke detector response we assume that the ceiling jet velocity at the detector must exceed this critical velocity, 0.15 m/sec (30 ft/min), at the detector. The flow from an HVAC system supply register also produces a flow velocity. When a fire occurs in a room equipped with ceiling-mounted HVAC system supply, the velocity at the detector is the vector sum of the velocity due to the HVAC system supply and the fire ceiling jet.

To estimate the resultant flow velocity at a smoke detector, the flow velocity from the ceiling supply is determined as a function of register design, flow volume, and distance from the supply register. The velocity produced by the ceiling jet is calculated as a function of distance from the fire plume. The worst-case limit condition is where the detector location is where the ceiling jet flow is directly opposite in direction to the flow from the HVAC supply register. Consequently, it is assumed that the ceiling jet is flowing in the opposite direction of the flow from the ceiling register.

The flow of air into a compartment via the HVAC system can be estimated by the flow volume and a flow factor that is related to the flow characteristics of the supply register. See Figure B.4.10.1(a) for an example of such characteristics.

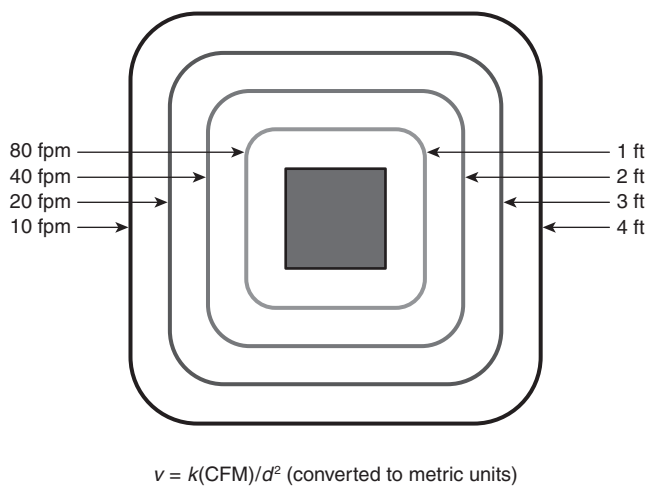

FIGURE B.4.10.1(a) *Typical HVAC Velocity Versus Flow Volume Diagram that Might be Used to Describe Operation of Supply Register.*

The manufacturer of the ceiling supply register provides a velocity diagram that depicts flow velocity as a function of flow volume for each register it produces. In the U.S., these diagrams generally use conventional feet per minute (FPM) and cubic feet per minute (CFM) units. Since fire protection engineering correlations are generally expressed in metric units, it is necessary to convert the flow volume and flow velocity from the HVAC system to metric units. Replacing CFM with flow volume per unit time this relation becomes:

$$v_r = k(V)/d^2 \text{ m/sec} \qquad \textbf{[B.4.10.1a]}$$

where:

v_r = is the velocity due to the register

The ceiling jet velocity can be modeled with the relation for critical velocity developed by Alpert.

$$v_d = 0.195\left(Q_c^{1/3} H^{1/2}\right) r^{5/6} \text{ m/sec} \qquad \textbf{[B.4.10.1b]}$$

The flow at the detector is the sum of the velocity from the ceiling jet and the ceiling supply register. Since the worst-case scenario is where the fire is located such that the flow of the ceiling jet is directly opposed to the flow from the HVAC supply register, this scenario forms the basis for the analysis as shown in Figure B.4.10.1(b).

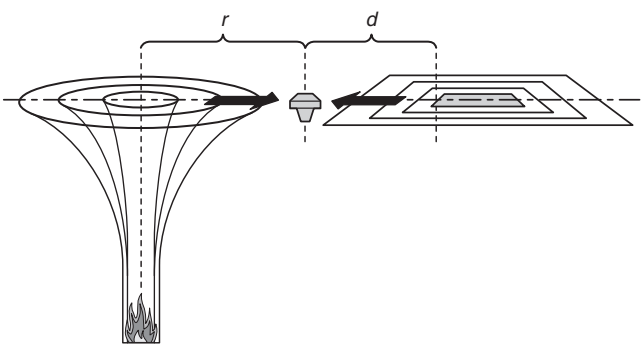

FIGURE B.4.10.1(b) *Ceiling Jet Flow in Opposition to Flow from HVAC System.*

The velocity from the ceiling jet is derived from Alpert's correlations.

$$v_d = 0.195\left(Q_c^{1/3} H^{1/2}\right) r^{5/6} \qquad \textbf{[B.4.10.1c]}$$

where:

v_d = ceiling jet velocity at the detector
Q_c = convective heat release, 0.65 Q
H = ceiling height
r = radius, distance between plume centerline and the detector

All in metric units.

In the case of opposing flows, the resultant velocity at the detector is the ceiling jet velocity minus the velocity due to the flow from the HVAC supply. The relation becomes:

$$v_d = 0.195\left(Q_c^{1/3} H^{1/2}\right)/r^{5/6} - k(V)/d^2 \qquad \textbf{[B.4.10.1d]}$$

Smoke detector response can be expected to be consistent with its listing when the value of v_d is greater than or equal to 0.15 m/sec. Thus the relation becomes:

$$0.15 \text{ m/sec} \le 0.195\left(Q_c^{1/3} H^{1/2}\right)/r^{5/6} - k(CFM)/d^2 \qquad \textbf{[B.4.10.1e]}$$

If the right-hand side of the equation B.4.10.1e exceeds the left, the airflow from the HVAC register should not be sufficient to reduce the ceiling jet flow from the fire plume to the point where response by a smoke detector would not be expected. On the other hand, if the calculated resultant velocity is less than the 0.15 m/sec threshold, adjustments should be made to the design to locate the smoke detector where there will be sufficient ceiling jet velocity to predict alarm response.

B.4.10.2 Effects of HVAC Returns. When detectors are in close proximity to ceiling-mounted HVAC return grilles, the flow of air upward toward the return grille tends to dilute and cool the ceiling jet. This tends to retard the response of detectors. Unfortunately the geometry is more complex in this case. The ceiling jet is moving horizontally across the ceiling while the flow toward a ceiling-mounted return grille is essentially moving vertically.

Most ceiling return grilles usually exhibit a flow velocity profile that is roughly hemispherical in shape, centered on the duct centerline. Figure B.4.10.2 illustrates this flow velocity profile.

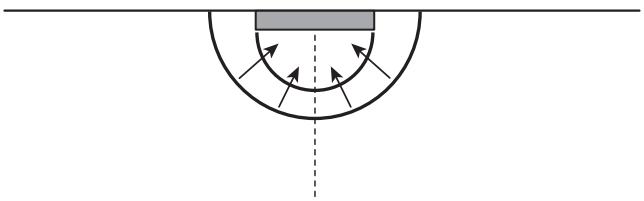

FIGURE B.4.10.2 *Velocity Profile for Ceiling-Mounted Return Grille.*

As the radial distance from the HVAC return increases, the velocity drops off quite rapidly, proportional to 4π times the square of the increase in distance. The relative velocity contributions could be again used to calculate the relative effect, but in this case an explicit sensitivity parameter that relates to the design fire is not available. Percent per foot obscuration cannot be reliably used.

However, the bounding value, worst-case scenario is where the upward velocity is modeled as if it is flowing directly opposite to that of the ceiling jet. This reduces to the same analysis as for the ceiling supply.

These calculations do NOT replace CFD modeling. They are limited only for level ceilings of heights normally encountered in commercial construction. In that limited context they can be used to predict smoke detector performance.

B.5 Radiant Energy Detection.

System Design Tip

A performance-based design method is the only permissible means to design a detection system using radiant energy–sensing fire detectors. Section B.5 provides the designer with more specific guidance on how to design consistently with the performance criteria in the Code. Section B.5 does not provide an alternative method to that required by the body of the Code. Instead, Section B.5 outlines how to meet the current requirements.

B.5.1 General.

B.5.1.1 Electromagnetic Radiation. Electromagnetic radiation is emitted over a broad range of the spectrum during the combustion process. The portion of the spectrum in which radiant energy–sensing detectors operate has been divided into three bands: ultraviolet (UV), visible, or infrared (IR). These wavelengths are defined with the following wavelength ranges: [3]

(1) Ultraviolet 0.1–0.35 microns
(2) Visible 0.35–0.75 microns
(3) Infrared 0.75–220 microns

B.5.1.2 Wavelength. These wavelength ranges correspond to the quantum-mechanical interaction between matter and energy. Photonic interactions with matter can be characterized by wavelength as shown in Table B.5.1.2.

TABLE B.5.1.2 *Wavelength Ranges*

Wavelength	*Photonic Interaction*
$\lambda < 50$ micron	Gross molecular translations
$50\ \mu m < \lambda < 1.0\ \mu m$	Molecular vibrations and rotations
$1.0\ \mu m < \lambda < 0.05\ \mu m$	Valence electron bond vibrations
$0.3\ \mu m < \lambda < 0.05\ \mu m$	Electron stripping and recombinations

B.5.1.3 Photon Transfer. When a fuel molecule is oxidized in the combustion process, the combustion intermediate molecule must lose energy to become a stable molecular species. This energy is emitted as a photon with a unique wavelength determined by the following equation:

$$e = \frac{hc}{\lambda} \qquad \textbf{[B.5.1.3]}$$

where:

e = energy (joules)
h = Planck's constant (6.63E-23 joule-sec)
c = speed of light (m/sec)
λ = wavelength (microns)

[1.0 joule = 5.0345E+18(λ), where λ is measured in microns.]

B.5.1.4 Type of Detector. The choice of the type of radiant energy–sensing detector to use is determined by the type of emissions that are expected from the fire radiator.

B.5.1.4.1 Fuels that produce a flame, a stream of combustible or flammable gases involved in the combustion reaction with a gaseous oxidizer, radiate quantum emissions. These fuels include flammable gases, flammable liquids, combustible liquids, and solids that are burning with a flame.

B.5.1.4.2 Fuels that are oxidized in the solid phase or radiators that are emitting due to their internal temperature (sparks and embers) radiate Planckian emissions. These fuels include carbonaceous fuels such as coal, charcoal, wood, and cellulosic fibers that are burning without an established flame, as well as metals that have been heated due to mechanical impacts and friction.

B.5.1.4.3 Almost all combustion events produce Planckian emissions, emissions that are the result of the thermal energy in the fuel mass. Therefore, spark/ember detectors that are designed to detect these emissions are not fuel specific. Flame detectors detect quantum emissions that are the result of changes in molecular structure and energy state in the gas phase. These emissions are uniquely associated with particular molecular structures. This can result in a flame detector that is very fuel specific.

System Design Tip

If a photon could be held in a hand, it could not be determined whether it was a Planckian photon or a quantum photon. The distinction between the two alludes to the theory of physics that explains the mechanism of their formation. Designers should note this distinction because it helps in the detector selection process. Designers must understand what emits photons and why they are emitted — only then can they select the appropriate type of detection device.

B.5.1.5 Effects of Ambient. The choice of radiant energy–sensing detector is also limited by the effect of ambient conditions. The design must take into account the radiant energy absorption of the atmosphere, presence of non-fire-related radiation sources that might cause nuisance alarms, the electromagnetic energy of the spark, ember, or fire to be detected, the distance from the fire source to the sensor, and characteristics of the sensor.

The assumption that the fire can be modeled as a point-source radiator is rarely unjustified. When conditions are such that the fire to be detected is too close to the detector for the point-source radiator assumption to be valid, there is also no doubt that the fire will be detected.

The response model is derived from first principles of physics. Since conventional flame detectors merely measure radiant intensity as a function of time to infer the presence of a flame, this simple response model is sufficient. However, video image flame detectors use image recognition, in addition to radiant intensity, as an indicator of flame. Sufficient information about the performance limitations of video image flame detectors is unavailable to develop an analogous model for that technology.

B.5.1.5.1 Ambient Non-Fire Radiators. Most ambients contain non-fire radiators that can emit at wavelengths used by radiant energy–sensing detectors for fire detection. The designer should make a thorough evaluation of the ambient to identify radiators that have the potential for producing unwarranted alarm response from radiant energy–sensing detectors. Since radiant energy–sensing detectors use electronic components that can act as antennas, the evaluation should include radio band, microwave, infrared, visible, and ultraviolet sources.

B.5.1.5.2 Ambient Radiant Absorbance. The medium through which radiant energy passes from fire source to detector has a finite transmittance. Transmittance is usually quantified by its reciprocal, absorbance. Absorbance by atmospheric species varies with wavelength. Gaseous species absorb at the same wavelengths that they emit. Particulate species can transmit, reflect, or absorb radiant emission, and the proportion that is absorbed is expressed as the reciprocal of its emissivity, ε.

B.5.1.5.3 Contamination of Optical Surfaces. Radiant energy can be absorbed or reflected by materials contaminating the optical surfaces of radiant energy–sensing detectors. The designer should evaluate the potential for surface contamination and implement provisions for keeping these surfaces clean. Extreme caution must be employed when considering the use of surrogate windows. Common glass, acrylic, and other glazing materials are opaque at the wavelengths used by most flame detectors and some spark/ember detectors. Placing a window between the detector and the hazard area that has not been listed by a nationally recognized testing laboratory (NRTL) for use with the detector in question is a violation of the detector listing and will usually result in a system that is incapable of detecting a fire in the hazard area.

B.5.1.5.4 Design Factors. These factors are important for several reasons. First, a radiation sensor is primarily a line-of-sight device, and must "see" the fire source. If there are other radiation sources in the area, or if atmospheric conditions are such that a large fraction of the radiation could be absorbed in the atmosphere, the type, location, and spacing of the sensors could be affected. In addition, the sensors react to specific wavelengths, and the fuel must emit radiation in the sensor's bandwidth. For example, an infrared detection device with a single sensor tuned to 4.3 microns (the CO_2 emission peak) cannot be expected to detect a non-carbon-based fire. Furthermore, the sensor needs to be able to respond reliably within the required time, especially when activating an explosion suppression system or similar fast-response extinguishing or control system.

B.5.1.6 Detector Response Model. The response of radiant energy–sensing detectors is modeled with a modified inverse square relationship as shown in the following equation [5]:

$$S = \frac{kPe^{-\zeta d}}{d^2} \qquad \textbf{[B.5.1.6]}$$

where:

S = radiant power reaching the detector (W or Btu/sec) sufficient to produce alarm response
k = proportionality constant for the detector
P = radiant power emitted by the fire (W or Btu/sec)
ζ = extinction coefficient of air at detector operating wavelengths
d = distance between the fire and the detector (m or ft)

This relationship models the fire as a point source radiator, of uniform radiant output per steradian, some distance (d) from the detector. This relationship also models the effect of absorbance by the air between the fire and the detector as being a uniform extinction function. The designer must verify that these modeling assumptions are valid for the application in question.

B.5.2 Design of Flame Detection Systems.

B.5.2.1 Detector Sensitivity. Flame detector sensitivity is traditionally quantified as the distance at which the unit can detect a fire of given size. The fire most commonly used by the NRTLs in North America is a 0.9 m^2 (1.0 ft^2) fire fueled with regular grade, unleaded gasoline. Some special-purpose detectors are evaluated using 150 mm (6 in.) diameter fires fueled with isopropanol.

B.5.2.1.1 This means of sensitivity determination does not take into account that flames can best be modeled as an optically dense radiator in which radiant emissions radiated from the far side of the flame toward the detector are re-absorbed by the flame. Consequently, the radiated power from a flame is not proportional to the area of the fire but to the flame silhouette, and hence to the height and width of the fire.

The radiant power emitted by a flaming fire is a function of the radiant power per unit of flame area multiplied by the flame area (i.e., the height multiplied by the width of the flame silhouette). This method of computing flame radiant power assumes that a flame is an optically dense radiator. This assumption, which has been shown to be valid, means that the flame itself absorbs radiation emitted by the back side of the flame and then re-emits it.

The optically dense flame model greatly simplifies response prediction calculations. The optically dense flame assumption means that, in the calculation of flame detector response, the emitted radiant power is not directly proportional to the surface area of a pool fire or the total surface area of the flame volume. In a comparison of two combustible liquid fires with the identical pool surface areas shown in Exhibit B.3, the fire from pool (b) will appear twice as large to the flame detector as the fire from pool (a).

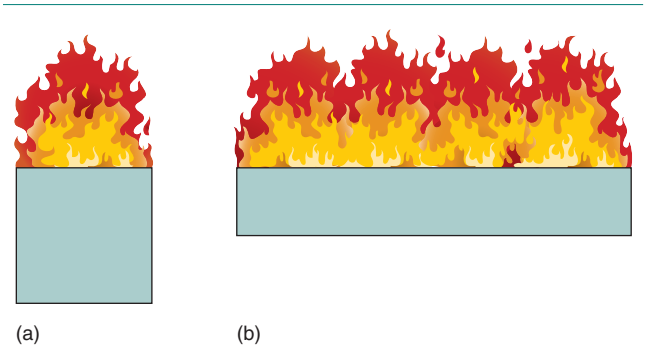

EXHIBIT B.3

Combustible Liquid Pool Fire Appearance.

For calculation of radiated power toward the detector, the radiating profile is used; that is, the flame modeled as a triangular flat radiator having a height equal to the flame height and a width equal to the pool width.

B.5.2.1.2 Because flame detectors detect the radiant emissions produced during the formation of flame intermediates and products, the radiant intensity produced by a flame at a given wavelength is proportional to the relative concentration of the specific intermediate or product in the flame and that portion of the total heat release rate of the fire resulting from the formation of that specific intermediate or product. This means that the response of a detector can vary widely as different fuels are used to produce a fire of the same surface area and flame width.

System Design Tip

Designers must verify that the fuels in the hazard area match those used in the listing evaluation of the flame detector. Relatively small variations in chemical composition can have profound effects on the response of the detector. For instance, a detector might detect a gasoline fire at 24 m (80 ft) but detect the same size fire fueled with #2 fuel oil at 12 m (40 ft). This variation represents a fourfold difference in sensitivity. Unfortunately, the variety of fuels used by the listing agencies is limited. Designers must be extremely careful in verifying detector sensitivity when oxygenated, aromatic, or silicone-containing fuels are present.

B.5.2.1.3 Many flame detectors are designed to detect specific products such as water (2.5 microns) and CO_2 (4.35 microns). These detectors cannot be used for fires that do not produce these products as a result of the combustion process.

System Design Tip

The designer could expect a flame detector that uses 2.5 micron (water emission) photocells to promptly detect a methane fire. Detection occurs because the hydrogen of the methane molecule combines with oxygen to produce two water molecules. However, the designer could not expect such a detector to detect burning sulfur or metals. Likewise, the designer cannot expect a detector using the 4.35 micron (CO_2 emission) photocell to respond to sulfur, combustible metal, or hydrogen fires because none of those fuels contains a carbon atom that can be oxidized to form carbon dioxide and emit the 4.35 micron emission the detector depends on for recognition of a flame.

B.5.2.1.4 Many flame detectors use time variance of the radiant emissions of a flame to distinguish between non-fire radiators and a flame. Where a deflagration hazard exists, the designer must determine the sample time period for such flame detectors and how such detectors will operate in the event of a deflagration of fuel vapor or fuel gases.

System Design Tip

The organization and design of the electronics in a flame detector can have unanticipated effects on its performance as a fire detection device. Many flame detectors require a time-variant, repetitive radiant signal before the radiation is interpreted as a flame emission. This type of circuit is ideal for detecting a growing hydrocarbon pool fire but might not detect a deflagration of a fuel vapor–air mixture. The deflagration produces a single immense flash of radiant energy that can saturate photocells, rendering them incapable of detection for short periods of time. With an accidental fuel spill, a significant passage of time might elapse before ignition during which fuel vapors are released into the air, creating a condition that will produce a deflagration rather than an expanding spill fire. The designer should verify that the listing agency has tested the detector for the fire scenarios appropriate to the hazard area, including partial volume deflagration.

B.5.2.2 Design Fire. Using the process outlined in Section B.2, determine the fire size (kW or Btu/sec) at which detection must be achieved.

Paragraphs B.5.2.2 through B.5.2.6 provide a step-by-step method for designing and analyzing a flame detection system.

B.5.2.2.1 Compute the surface area the design fire is expected to occupy from the correlations in Table B.2.3.2.6.2(a) or other sources. Use the flame height correlation to determine the height of the flame plume:

$$h_f = 0.182(kQ)^{2/5} \quad \text{(for SI units)} \qquad \textbf{[B.5.2.2.1a]}$$

or

$$h_f = 0.584(kQ)^{2/5} \quad \text{(for inch-pound units)} \qquad \textbf{[B.5.2.2.1b]}$$

where:

h_f = flame height (m or ft)
Q = heat release rate (kW or Btu/sec)
k = wall effect factor. Where there are no nearby walls, use $k = 1$; where the fuel package is near a wall, use $k = 2$; where the fuel package is in a corner, use $k = 4$

Determine the minimum anticipated flame area width (w_f). Where flammable or combustible liquids are the fuel load and are unconfined, model the fuel as a circular pool. Compute the radiating area (A_r) using the following equation:

$$A_r = \frac{1}{2h_f w_f} \qquad \textbf{[B.5.2.2.1c]}$$

where:

A_r = radiating area (m^2 or ft^2)
h_f = flame height (m or ft)
w_f = flame width (m or ft)

System Design Tip

This model assumes that the flame looks like an isosceles triangle from the detector's viewing angle. The altitude of the triangle is derived from the flame height correlations. Once the height is determined, the designer selects the base width and calculates the radiation area.

Note that this method is based on the total heat release rate of the design fire. It does not employ the commonly used ratio of 35 percent radiant heat release and 65 percent convective heat release because the test methods employed by the listing agencies do not quantify the test fires in terms of radiant heat release rate. The fires are quantified by the pool surface area only. The method in Annex B uses a consistent approach to estimate the radiating area of the design fire and the test fire. The method then compares the design fire to the test fire on the basis of radiating area and power per unit area.

B.5.2.2.2 The radiant power output of the fire to the detector can be approximated as being proportional to the radiating area (A_r) of the flame:

$$P = cA_r \qquad \textbf{[B.5.2.2.2]}$$

where:

A_r = radiating area (m^2 or ft^2)
c = power per unit area proportionality constant
P = radiated power (W or Btu/sec)

System Design Tip

Designers will see that the actual sensitivity of the detector is never explicitly calculated when this method is used. The detector performance relation (equation B.5.1.6) is used to compare performance in the listing agency's fire tests (equation B.5.2.4a) to the performance of the design fire (equation B.5.2.4b). The parameter *c* does not need to be quantified because they drop out of the final equation (equation B.5.2.4d).

B.5.2.3 Calculate Detector Sensitivity. Using Equation B.5.2.2.1a or B.5.2.2.1b compute the radiating area of the test fire used by the NRTL in the listing process (A_t). The radiant power output of the test fire to the detector in the listing process is proportional to the radiating area (A_t) of the listing test flame.

The same relations and process that were used to calculate the design fire radiating area are used to calculate the listing agency's test fire radiating area.

B.5.2.4 Calculate Detector Response to Design Fire. Because the sensitivity of a flame detector is fixed during the manufacturing process, the following is the relationship that determines the radiant power reaching the detector sufficient to produce an alarm response:

$$S = \frac{kcA_t e^{-\zeta d}}{d^2} \qquad \textbf{[B.5.2.4a]}$$

where:

S = radiant power reaching the detector (W or Btu/sec) sufficient to produce alarm response
k = proportionality constant for the detector
A_t = radiant area of the listing test fire (m^2 or ft^2)
ζ = extinction coefficient of air at detector operating wavelengths
d = distance between the fire and the detector during the listing fire test (m or ft)
c = emitted power per unit flame radiating area correlation

Because the sensitivity of the detector is constant over the range of ambients for which it is listed:

$$S = \frac{kcA_r e^{-\zeta d'}}{d'^2} \qquad \textbf{[B.5.2.4b]}$$

where:

S = radiant power reaching the detector (W or Btu/sec) sufficient to produce alarm response
k = proportionality constant for the detector
c = emitted power per unit flame radiating area correlation
A_r = radiant area of the design fire (m^2 or ft^2)
ζ = extinction coefficient of air at detector operating wavelengths
d' = distance between the design fire and the detector (m or ft)

Therefore, use the following equation to determine the following:

$$\frac{kcA_t e^{-\zeta d}}{d^2} = \frac{kcA_r e^{-\zeta d'}}{d'^2} \qquad \textbf{[B.5.2.4c]}$$

To solve for d' use the following equation:

$$\left(\frac{d^2 A_r e^{-\zeta d'}}{A_t e^{-\zeta d}}\right)^{1/2} = d' \qquad \textbf{[B.5.2.4d]}$$

This relation is solved iteratively for d', the distance at which the detector can detect the design fire.

This method relies on several important assumptions. First, the design fire is assumed to have the same fuel as the fire in the listing evaluation, which allows the emitted power per unit area correlation parameter (c) to cancel out in the final equation. Second, this method assumes that the fire can be modeled

as a point source radiator, which becomes invalid when the flame area occupies a substantial fraction of the total field of view of the detector. Finally, this method demands that a numerical value for the atmospheric extinction coefficient (ζ) is included in the data generated during the listing evaluation.

A value for ζ can be calculated in accordance with B.5.2.7.

B.5.2.5 Correction for Angular Displacement.

B.5.2.5.1 Most flame detectors exhibit a loss of sensitivity as the fire is displaced from the optical axis of the detector. This correction to the detector sensitivity is shown as a polar graph in Figure A.17.8.3.2.3.

B.5.2.5.2 When the correction for angular displacement is expressed as a reduction of normalized detection distance, the correction is made to detection distance (d').

B.5.2.5.3 When the correction for angular displacement is expressed as a normalized sensitivity (fire size increment), the correction must be made to A_f, prior to calculating response distance (d').

B.5.2.6 Corrections for Fuel. Most flame detectors exhibit some level of fuel specificity. Some manufacturers provide "fuel factors" that relate detector response performance to a fire of one fuel to the response performance of a benchmark fuel. Other manufacturers provide performance criteria for a list of specific fuels. Unless the manufacturer's published instructions, bearing the listing mark, contain explicit instructions for the application of the detector for fuels other than those used in the listing process, the unit cannot be deemed listed for use in hazard areas containing fuels different from those employed in the listing process.

B.5.2.6.1 When the fuel factor correction is expressed as a detection distance reduction, the correction should be applied after the detection distance has been computed.

B.5.2.6.2 When the fuel factor correction is expressed as a function of normalized fire size, the correction must be made prior to calculating detection distance.

B.5.2.7 Atmospheric Extinction Factors.

B.5.2.7.1 Because the atmosphere is not infinitely transmittent at any wavelength, all flame detectors are affected by atmospheric absorption to some degree. The effect of atmospheric extinction on the performance of flame detectors is determined to some degree by the wavelengths used for sensing and the detector electronic architecture. Values for the atmospheric extinction coefficient (ζ) should be obtained from the detector manufacturer's published instructions.

Δ **B.5.2.7.2** The numerical value of ζ can be determined experimentally for any flame detector. The detector must be tested with two different sized test fires to determine the distance at which each of the fires can be detected by the detector in question. The larger the difference between the sizes of the flaming fires, the more precise the determination of ζ. Ideally, one test fire would be approximately 4 times the heat release rate (surface area) of the other. The data are then used in the relation:

$$\zeta = \frac{\ln\left[\left(d_1^2 A_2\right)/\left(d_2^2 A_1\right)\right]}{d_2 - d_1} \qquad \textbf{[B.5.2.7.2]}$$

where:

"l" = subscripts referring to the first test fire
"2" = subscripts referring to the second test fire
d = maximum distance between the flame detector and the fire at which the fire is detected
A = the radiating area of the test fire as determined per B.5.2.2.1

This relation allows the designer to determine the value of ζ for detectors that are already installed or for those that were evaluated for listing before the inclusion of the requirement for the publishing of ζ appeared in ANSI/FM-3260.

The relation for calculating ζ is derived from the response relation, equation B.5.2.4a. The relation is particularly useful in the analysis of existing systems where the manufacturer's published documentation does not include the design value.

B.5.3 Design of Spark/Ember Detection Systems.

System Design Tip

The similarity between the methods for the design of flame detection systems in B.5.2 and for spark/ember detection systems in B.5.3 is not accidental. Each method employs the same physics but different chemistry. Because spark/ember detectors are designed to detect Planckian emissions from an ember due to its temperature, designers do not have to deal with fuel specificity as they do when designing flame detection systems. An important note is that all flames emit radiation over the range of wavelengths normally used for spark/ember detectors. However, normal ambient light and light from artificial light sources is also rich in near infrared radiation, which prevents the use of most spark/ember detectors in normally lit ambient environments.

B.5.3.1 Design Fire. Using the process outlined in Section B.2, determine the fire size (kW or Btu/sec) at which detection must be achieved.

B.5.3.1.1 The quantification of the fire is generally derived from the energy investment per unit time sufficient to propagate combustion of the combustible particulate solids in the fuel stream. Because energy per unit time is power, expressed in watts, the fire size criterion is generally expressed in watts or milliwatts.

B.5.3.1.2 The radiant emissions, integrated over all wavelengths, from a non-ideal Planckian radiator is expressed with the following form of the Stefan–Boltzmann equation:

$$P = \varepsilon A \sigma T^4 \qquad \textbf{[B.5.3.1.2]}$$

where:

P = radiant power (W or Btu/sec)
ε = emissivity, a material property expressed as a fraction between 0 and 1.0
A = area of radiator (m^2 or ft^2)
σ = Stefan–Boltzmann constant 5.67E-8 W/m^2K^4
T = temperature (K or R)

B.5.3.1.3 This models the spark or ember as a point source radiator.

B.5.3.2 Fire Environment. Spark/ember detectors are usually used on pneumatic conveyance system ducts to monitor combustible particulate solids as they flow past the detector(s). This environment puts large concentrations of combustible particulate solids between the fire and the detector. A value for ζ must be computed for the monitored environment. The simplifying assumption that absorbance at visible levels is equal to or greater than that at infrared wavelengths yields conservative designs and is used.

B.5.3.3 Calculate Detector Response to Design Fire. Because the sensitivity of a spark/ember detector is fixed during the manufacturing process,

$$S = \frac{kPe^{-\zeta d}}{d^2} \qquad \textbf{[B.5.3.3a]}$$

where:

S = radiant power reaching the detector (W or Btu/sec) sufficient to produce alarm response
k = proportionality constant for the detector
P = radiant power emitted by test spark (W or Btu/sec)
ζ = extinction coefficient of air at detector operating wavelengths
d = distance between the fire and the detector during the listing fire test (m^2 or ft^2)

Because the sensitivity of the detector is constant over the range of ambients for which it is listed,

$$S = \frac{kP'e^{-\zeta d'}}{d'^2} \qquad \textbf{[B.5.3.3b]}$$

where:

S = radiant power reaching the detector (W or Btu/sec) sufficient to produce alarm response
k = proportionality constant for the detector
P' = radiant power from the design fire (W or Btu/sec)
ζ = the extinction coefficient of air at detector operating wavelengths
d' = the distance between the design fire and the detector (m^2 or ft^2)

Therefore, use the following equation to solve for

$$\frac{kPe^{-\zeta d}}{d^2} = \frac{kP'e^{-\zeta d'}}{d'^2} \qquad \textbf{[B.5.3.3c]}$$

To solve for d',

$$d' = \left(\frac{d^2P'e^{-\zeta d'}}{Pe^{-\zeta d}}\right)^{1/2} \qquad \textbf{[B.5.3.3d]}$$

This relation is solved iteratively for d', the distance at which the detector can detect the design fire.

System Design Tip

Since the spark is essentially a point source radiator of measurable radiant power, the designer does not need to perform a flame area calculation for spark/ember detectors. However, the designer should keep in mind that spark/ember detectors generally respond only to a step-function increase in radiant power. Consequently, these detectors cannot be used to detect slowly developing smoldering conditions or to look down the length of a conveyance duct.

The numerical value used for ζ is the optical obscuration of the air in the duct. This value is derived from the mass per unit of air volume for the particulate transported through the duct.

B.5.3.4 Correction for Angular Displacement.

B.5.3.4.1 Most spark/ember detectors exhibit a loss of sensitivity as the fire is displaced from the optical axis of the detector. This correction to the detector sensitivity is shown as a polar graph in Figure A.17.8.3.2.3.

B.5.3.4.2 When the correction for angular displacement is expressed as a reduction of normalized detection distance, the correction is made to detection distance (d').

B.5.3.4.3 When the correction for angular displacement is expressed as a normalized sensitivity (fire size increment), the correction must be made to P' prior to calculating response distance (d').

B.5.3.5 Corrections for Fuel. Because spark/ember detectors respond to Planckian emission in the near infrared portion of the spectrum, corrections for fuels are rarely necessary.

B.6 Computer Fire Models.

Several special application computer models are available to assist in the design and analysis of both heat detectors (e.g., fixed-temperature, rate-of-rise, sprinklers, fusible links) and smoke detectors. These computer models typically run on personal computers and are available from NIST website http://fire.nist.gov.

B.6.1 DETACT — T^2. DETACT — T^2 (DETector ACTuation — time squared) calculates the actuation time of heat detectors (fixed-temperature and rate-of-rise) and sprinklers to user-specified fires that grow with the square of time. DETACT — T^2 assumes the detector is located in a large compartment with an unconfined ceiling, where there is no accumulation of hot gases at the ceiling. Thus, heating of the detector is only from the flow of hot gases along the ceiling. Input data include H, τ_0, RTI, T_s, S, and α. The program calculates the heat release rate at detector activation, as well as the time to activation.

B.6.2 DETACT — QS. DETACT — QS (DETector ACTuation — quasi-steady) calculates the actuation time of heat detectors and sprinklers in response to fires that grow according to a user-defined fire. DETACT — QS assumes the detector is located in a large compartment with unconfined ceilings, where there is no accumulation of hot gases at the ceiling. Thus, heating of the detector is only from the flow of hot gases along the ceiling. Input data include H, τ_0, RTI, T_s, the distance of the detector from the fire's axis, and heat release rates at user-specified times. The program calculates the heat release rate at detector activation, the time to activation, and the ceiling jet temperature.

DETACT — QS can also be found in HAZARD I, FIREFORM, FPETOOL. A comprehensive evaluation of DETACT QS can be found in the *SFPE Engineering Guide: Evaluation of the Computer Fire Model DETACT QS*. This guide provides information on the theoretical basis, mathematical robustness, sensitivity of output to input, and an evaluation of the predictive ability of the model.

B.6.3 LAVENT. LAVENT (Link Actuated VENT) calculates the actuation time of sprinklers and fusible link-actuated ceiling vents in compartment fires with draft curtains. Inputs include the ambient temperature, compartment size, thermophysical properties of the ceiling, fire location, size and growth rate, ceiling vent area and location, RTI, and temperature rating of the fusible links. Outputs of the model include the temperatures and release times of the links, the areas of the vents that have opened, the radial temperature distribution at the ceiling, and the temperature and height of the upper layer.

B.6.4 JET is a single-compartment, two-zone computer model. It has been designed to calculate the centerline temperature of the plume, the ceiling jet temperature, and the ceiling jet velocity. JET can model ceiling-mounted fusible links, as well as link-actuated ceiling vents. JET evolved from the model platform used for LAVENT and contains many of the same features. Some of the major differences between them include the ceiling jet temperature and velocity algorithms, the fusible link algorithm, and the use of a variable radiative fraction. [57]

Δ **B.6.5 References.**

(1) Alpert, R. "Ceiling Jets," *Fire Technology*, Aug. 1972.
(2) "Evaluating Unsprinklered Fire Hazards," *SFPE Technology Report* 83-2.
(3) Babrauskas, V., Lawson, J. R., Walton, W. D., and Twilley, W. H. "Upholstered Furniture Heat Release Rates Measured with a Furniture Calorimeter," (NBSIR

82-2604) (Dec. 1982). National Institute of Standards and Technology (formerly National Bureau of Standards), Center for Fire Research, Gaithersburg, MD 20889.

(4) Beyler, C. "A Design Method for Flaming Fire Detection," *Fire Technology*, Vol. 20, No. 4, Nov. 1984.

(5) DiNenno, P., ed. Chapter 31, *SFPE Handbook of Fire Protection Engineering*, by R. Schifiliti, Sept. 1988.

(6) Evans, D. D. and Stroup, D. W. "Methods to Calculate Response Time of Heat and Smoke Detectors Installed Below Large Unobstructed Ceilings," (NBSIR 85-3167) (Feb. 1985, issued Jul. 1986). National Institute of Standards and Technology (formerly National Bureau of Standards), Center for Fire Research, Gaithersburg, MD 20889.

(7) Heskestad, G. "Characterization of Smoke Entry and Response for Products-of-Combustion Detectors" Proceedings, 7th International Conference on Problems of Automatic Fire Detection, Rheinish-Westfalischen Technischen Hochschule Aachen (Mar. 1975).

(8) Heskestad, G. "Investigation of a New Sprinkler Sensitivity Approval Test: The Plunge Test," FMRC Tech. Report 22485, Factory Mutual Research Corporation, 1151 Providence Turnpike, Norwood, MA 02062.

(9) Heskestad, G. and Delichatsios, M. A. "The Initial Convective Flow in Fire: Seventeenth Symposium on Combustion," The Combustion Institute, Pittsburgh, PA (1979).

(10) Heskestad, G. and Delichatsios, M. A. "Environments of Fire Detectors — Phase 1: Effect of Fire Size, Ceiling Height and Material," Measurements Vol. I (NBS-GCR-77-86), Analysis Vol. II (NBS-GCR-77-95). National Technical Information Service (NTIS), Springfield, VA 22151.

(11) Heskestad, G. and Delichatsios, M. A. "Update: The Initial Convective Flow in Fire," *Fire Safety Journal*, Vol. 15, No. 5, 1989.

(12) International Organization for Standardization, *Audible Emergency Evacuation Signal*, ISO 8201, 1987.

(13) Klote, J. and Milke, J. "Principles of Smoke Management," American Society of Heating, Refrigerating and Air Conditioning Engineers, Atlanta, GA, 2002.

(14) Lawson, J. R., Walton, W. D., and Twilley, W. H. "Fire Performance of Furnishings as Measured in the NBS Furniture Calorimeter, Part 1," (NBSIR 83-2787) (Aug. 1983). National Institute of Standards and Technology (formerly National Bureau of Standards), Center for Fire Research, Gaithersburg, MD 20889.

(15) Morton, B. R., Taylor, Sir Geoffrey, and Turner, J. S. "Turbulent Gravitational Convection from Maintained and Instantaneous Sources," Proc. Royal Society A, 234, 1–23, 1956.

(16) Schifiliti, R. "Use of Fire Plume Theory in the Design and Analysis of Fire Detector and Sprinkler Response," Master's Thesis, Worcester Polytechnic Institute, Center for Firesafety Studies, Worcester, MA, 1986.

(17) Title 47, Code of Federal Regulations, Communications Act of 1934 Amended.

(18) Schifiliti, R. and Pucci, W. "Fire Detection Modelling, State of the Art," 6 May, 1996 sponsored by the Fire Detection Institute, Bloomfield, CT.

(19) Forney, G., Bukowski, R., Davis, W. "Field Modelling: Effects of Flat Beamed Ceilings on Detector and Sprinkler Response," Technical Report, Year 1. International Fire Detection Research Project, Fire Protection Research Foundation, Quincy, MA. October, 1993.

(20) Davis, W., Forney, G., Bukowski, R. "Field Modelling: Simulating the Effect of Sloped Beamed Ceilings on Detector and Sprinkler Response," Year 1. International Fire Detection Research Project Technical Report, Fire Protection Research Foundation, Quincy, MA. October, 1994.

(21) Brozovski, E. "A Preliminary Approach to Siting Smoke Detectors Based on Design Fire Size and Detector Aerosol Entry Lag Time," Master's Thesis, Worcester Polytechnic, Worcester, MA, 1989.
(22) Cote, A. *NFPA Fire Protection Handbook*, 20th edition, National Fire Protection Association, Quincy, MA, 2008.
(23) Tewarson, A., "Generation of Heat and Chemical Compounds in Fires," *SFPE Handbook of Fire Protection Engineering*, Second Edition, NFPA and SFPE, 1995.
(24) Hollman, J. P. *Heat Transfer*, McGraw-Hill, New York, 1976.
(25) Custer, R. L. P., and Meacham, B. "Introduction to Performance Based Fire Safety," SFPE, 1997.
(26) Schifiliti, R. P., Meacham B., Custer, R. L. P. "Design of Detection Systems," *SFPE Handbook of Fire Protection Engineering*.
(27) Marrion, C. "Correction Factors for the Heat of Combustion in NFPA 72," Appendix B, Fire Protection Engineering, SFPE, 1998.
(28) Marrion, C. "Designing and Analyzing the Response of Detection Systems: An Update to Previous Correlations," 1988.
(29) Custer, R. and Bright, R. "Fire Detection: The State-of-the-Art," NBS Tech. Note 839, National Bureau of Standards, Washington, 1974.
(30) Meacham, Brian J. "Characterization of Smoke from Burning Materials for the Evaluation of Light Scattering-Type Smoke Detector Response," MS Thesis, WPI Center for Firesafety Studies, Worcester, MA, 1991.
(31) Delichatsios, M. A. "Categorization of Cable Flammability, Detection of Smoldering, and Flaming Cable Fires," Interim Report, Factory Mutual Research Corporation, Norwood, MA, NP-1630, Nov. 1980.
(32) Heskestad, G. FMRC Serial Number 21017, Factory Mutual Research Corp., Norwood, MA, 1974.
(33) Marrion, C. E. "Lag Time Modeling and Effects of Ceiling Jet Velocity on the Placement of Optical Smoke Detectors," MS Thesis, WPI Center for Firesafety Studies, Worcester, MA, 1989.
(34) Kokkala, M. et al. "Measurements of the Characteristic Lengths of Smoke Detectors," *Fire Technology*, Vol. 28, No. 2, National Fire Protection Association, Quincy, MA, 1992.
(34a) Yamauchi et al. "A Calculation Method for Predicting Heat and Smoke Detector's Response."
(34b) Cleary et al. "Particulate Entry Lag in Spot Type Smoke Detectors," IAFSS Proceedings, Boston, MA 2000.
(34c) Keski-Rahkonen, "Revisiting Modeling of Fluid Penetration into Smoke Detectors," AUBE 2001.
(34d) Bjoerkman et al. "Determination of Dynamic Model Parameters of Smoke Detectors," *Fire Safety Journal*, No 37, pp. 395–407, 2002.
(34e) Keski-Rahkonen, "A New Model for Time Lag of Smoke Detectors," International Collaborative Project to Evaluate Fire Models for Nuclear Power Plant Application, Gaithersburg, MD May 2002.
(35) UL 268, *Standard for Smoke Detectors for Fire Alarm Signaling Systems*, Underwriters Laboratories, Inc., Northbrook, IL, 2009.
(36) Deal, Scott. "Technical Reference Guide for FPEtool Version 3.2," NISTIR 5486, National Institute for Standards and Technology, U.S. Department of Commerce, Gaithersburg, MD, Aug. 1994.
(37) Mowrer, F. W. "Lag Times Associated with Detection and Suppression," *Fire Technology*, Vol. 26, No. 3, pp. 244–265, 1990.
(38) Newman, J. S. "Principles for Fire Detection," *Fire Technology*, Vol. 24, No. 2, pp. 116–127, 1988.

(39) Custer, R., Meacham, B., Wood, C. "Performance Based Design Techniques for Detection and Special Suppression Applications," Proceedings of the SFPE Engineering Seminars on Advances in Detection and Suppression Technology, 1994.
(40) SFPE *Engineering Guide to Performance Based Fire*, 2nd edition, SFPE, Gaithersburg, MD, 2007.
(41) SFPE *Handbook of Fire Protection Engineering*, Fifth Edition, SFPE, Gaithersburg, MD, 2016.
(42) Drysdale, Dougal, *An Introduction to Fire Dynamics*, John Wiley & Sons, New York, NY, 1998, ISBN 0 471 90613 1, Second Edition.
(43) Nam S., Donovan L.P. and Kim S.G., Establishing Heat Detectors Thermal Sensitivity Through Bench Scale Tests; *Fire Safety Journal*, Volume 39, Number 3, 191–215; April 2004.
(44) Nam S., Thermal Response Coefficient TRC of Heat Detectors and Its Field Applications, Fire Detection and Research Applications Symposium, NFPA Research Foundation, January 2003.
(45) Nam S., Performance-Based Heat Detector Spacing, Interflam 2004, pp. 883–892.
(46) Geiman, J. A., "Evaluation of Smoke Detector Response Estimation Methods," Master of Science Thesis, University of Maryland, College Park, MD, December 2003.
(47) Projected Beam Smoke Detectors — More Than Just a Substitute for Spot Detectors, Fire Protection Engineering, Summer 2004, SFPE.
(48) Geiman, J. A., and Gottuck, D.T., "Alarm Thresholds for Smoke Detector Modeling," *Fire Safety Science — Proceeding of the Seventh International Symposium*, 2003, pp. 197–208.
(49) *The SFPE Code Official's Guide to Performance-based Design Review and Analysis of Buildings*, Society of Fire Protection Engineers, Bethesda, MD, 2004.
(50) NFPA *101*, *Life Safety Code*, National Fire Protection Association, Quincy, MA, 2009.
(51) NFPA 909, *Code for the Protection of Cultural Resource Properties — Museums, Libraries, and Places of Worship*, National Fire Protection Association, Quincy, MA, 2010.
(52) NFPA 914, *Code for Fire Protection of Historic Structures*, National Fire Protection Association, Quincy, MA, 2010.
(53) Performance-based Building Design Concepts, International Code Council, Washington DC, 2004.
(54) *Extreme Event Mitigation In Buildings — Analysis and Design*, Meacham, National Fire Protection Association, Quincy MA, 2006.
(55) Geiman, Gottuk, and Milke, "Evaluation of Smoke Detector Response Estimation Methods: Optical Density, Temperature Rise and Velocity at Alarm," *Journal of Fire Protection Engineering*, 2006.
(56) Su et al., "Kemano Fire Studies — Part 1: Response of Residential Smoke Alarms," Research Report 108, NRCC, April 2003.
(57) Davis, W., The Zone Model Jet, "A Model for the Prediction of Detector Activation and Gas Temperature in the Presence of a Smoke Layer," NISTIR 6324, NIST, May 1999.
(58) NFPA 72E, Standard for Automatic Fire Detectors, 1984 edition.

B.7 Nomenclature.

The nomenclature used in Annex B is defined in Table B.7.

Δ ***TABLE B.7*** *Nomenclature*

α	=	fire intensity coefficient (kW/sec^2 or Btu/sec^3)
A	=	area (m^2 or ft^2)
A_0	=	$g/(C_p T_a \rho)$ [m^4/(sec^{2}kJ) or ft^4/(sec^{2}Btu)]
A_r	=	radiating area (m^2 or ft^2)
A_t	=	radiating area of test fire
C	=	specific heat of detector element (kJ/kg·°C or Btu/lbm·°F)
c	=	speed of light (m/sec or ft/sec)
C_p	=	specific heat of air [kJ/(kg K) or Btu/lbm R (1.040 kJ/kg K)]
D_m	=	mass optical density (m^2/g or ft^2/lb)
d	=	distance between fire and radiant energy–sensing detector
d'	=	distance between fire and detector
$d(Du)/dt$	=	rate of increase of optical density outside the detector
D	=	$0.146 + 0.242r/H$
Δt	=	change in time (seconds)
ΔT	=	increase above ambient in temperature of gas surrounding a detector (°C or °F)
Δt_d	=	increase above ambient in temperature of a detector (°C or °F)
Δt_p^*	=	change in reduced gas temperature
e	=	energy (joules or Btu)
f	=	functional relationship
g	=	gravitational constant (9.81 m/sec^2 or 32 ft/sec^2)
h	=	Planck's constant (6.63E-23 joule-sec)
H	=	ceiling height or height above fire (m or ft)
H_c	=	convective heat transfer coefficient (kW/m^2·°C or Btu/ft^2·sec·°F)
ΔH_c	=	heat of combustion (kJ/mol)
h_f	=	flame height (m or ft)
H_f	=	heat of formation (kJ/mol)
L	=	characteristic length for a given detector design
k	=	detector constant, dimensionless
m	=	mass (kg or lbm)
p	=	positive exponent
P	=	radiant power (watts or Btu/sec)
q	=	heat release rate density per unit floor area (watts/m^2 or Btu/sec·ft^2)
Q	=	heat release rate (kW or Btu/sec)
Q_c	=	convection portion of fire heat release rate (kW or Btu/sec)
Q_{cond}	=	heat transferred by conduction (kW or Btu/sec)
Q_{conv}	=	heat transferred by convection (kW or Btu/sec)
Q_d	=	threshold fire size at which response must occur
Q_{rad}	=	heat transferred by radiation (kW or Btu/sec)
Q_{total}	=	total heat transfer (kW or Btu/sec)
Q_{CR}	=	critical heat release rate (kW or Btu/sec)
Q_{DO}	=	design heat release rate (kW or Btu/sec)
Q_m	=	maximum heat release rate (kW or Btu/sec)
Q_p	=	predicted heat release rate (kW or Btu/sec)
Q_T	=	threshold heat release rate at response (kW or Btu/sec)
r	=	radial distance from fire plume axis (m or ft)
ρ_0	=	density of ambient air [kg/m^3 or lb/ft^3 (1.1 kg/m^3)]
RTI	=	response time index (m$^{1/2}$sec$^{1/2}$ or ft$^{1/2}$ sec$^{1/2}$)

Δ ***TABLE B.7*** *Continued*

S	=	spacing of detectors or sprinkler heads (m or ft)
S	=	radiant energy
t_{DO}	=	time at which the design objective heat release rate (Q_{DO}) is reached (seconds)
t_{CR}	=	time at which the critical heat release rate (Q_{CR}) is reached (seconds)
t	=	time (seconds)
t_c	=	critical time — time at which fire would reach a heat release rate of 1055 kW (1000 Btu/sec) (seconds)
t_d	=	time to detector response
t_g	=	fire growth time to reach 1055 kW (1000 Btu/sec) (seconds)
t_r	=	response time (seconds)
t_{respond}	=	time available, or needed, for response to an alarm condition (seconds)
t_v	=	virtual time of origin (seconds)
$t_{2\text{f}}$	=	arrival time of heat front (for $p = 2$ power law fire) at a point r/H (seconds)
t^*_{2f}	=	reduced arrival time of heat front (for $p = 2$ power law fire) at a point r/H (seconds)
t^*_p	=	reduced time
T	=	temperature (°C or °F)
T_a	=	ambient temperature (°C or °F)
T_c	=	plume centerline temperature (°C or °F)
T_d	=	detector temperature (°C or °F)
T_g	=	temperature of fire gases (°C or °F)
T_s	=	rated operating temperature of a detector or sprinkler (°C or °F)
u_0	=	instantaneous velocity of fire gases (m/sec or ft/sec)
u	=	velocity (m/sec or ft/sec)
u_c	=	critical velocity
U^*_p	=	reduced gas velocity
V	=	velocity of smoke at detector
w_f	=	flame width (m or ft)
Y	=	defined in equation B.27
z	=	height above top of fuel package involved (m or ft)
λ	=	wavelength (microns)
Z_m	=	maximum height of smoke rise above fire surface (m or ft)
τ	=	detector time constant mc/H_cA (seconds)
τ_0	=	detector time constant measured at reference velocity u_0 (seconds)
ε	=	emissivity, a material property expressed as a fraction between 0 and 1.0

References Cited in Commentary

ANSI/UL 268, *Standard for Smoke Detectors for Fire Alarm Systems*, 2016, Underwriters Laboratories, 333 Pfingsten Road, Northbrook, IL.

Brozovski, E., "A Preliminary Approach to Siting Smoke Detectors Based on Design Fire Size and Detector Aerosol Entry Lag Time," Master of Science Thesis, Worcester Polytechnic Institute, Worcester, MA, 1991.

Custer, R. L. P., and Meacham, B. J., *Introduction to Performance-Based Fire Safety,* National Fire Protection Association, Quincy, MA, 1997.

Evans, D. D., and Stroup, D. W., "Methods to Calculate Response Time of Heat and Smoke Detectors Installed Below Large Unobstructed Ceilings," NBSIR 85-3167, Feb. 1985, issued

July 1986, National Institute of Standards and Technology, Center for Fire Research, Gaithersburg, MD.

Fire Protection Research Foundation, *International Fire Detection Research Project,* Technical Report (Years 1, 2, 3, and 4), National Fire Protection Association, Quincy, MA, 1993–1998.

FM Approval Standard 3210, *Heat Detectors for Automatic Fire Alarm Signaling*, FM Global, Norwood, MA, 2007.

Geiman, J. A., "Evaluation of Smoke Detector Response Estimation Methods," Master of Science Thesis, University of Maryland, College Park, MD, 2003.

Heskestad, G., and Delichatsios, M. A., "Environments of Fire Detectors — Phase 1: Effect of Fire Size, Ceiling Height and Material," *Measurements* Vol. I (NBS-GCR-77-86), Analysis Vol. II (NBS-GCR-77-95). National Technical Information Service (NTIS), Springfield, VA, 1977.

Meacham, B. J., and Custer, R. L. P., "Performance-Based Fire Safety Engineering: An Introduction of Basic Concepts," *Journal of Fire Protection Engineering,* 1995; 7(2).

Pomeroy, A. T., "Analysis of the Effects of Temperature and Velocity on the Response Time Index of Heat Detectors Velocity," Master of Science Thesis, University of Maryland, College Park, MD, 2010.

Schifiliti, R., and Pucci, W., "Fire Detection Modelling, State of the Art," 6 May 1996, sponsored by the Fire Detection Institute, Bloomfield, CT.

Performance-Based Design and Fire Alarm Systems

John M. Cholin, P.E., FSFPE
Updated by Daniel J. O'Connor, P.E.

Editor's Note: *Chapter 17 of NFPA 72®, National Fire Alarm and Signaling Code®, includes a performance-based option in the design of the fire detection portion of fire alarm systems. Annex B outlines the performance-based design methods. This document provides an overview of the underlying concepts of performance-based design as they can be applied to fire alarm systems.*

INTRODUCTION

Fire protection engineers have embedded the term *performance-based design* into the language of the fire protection community. To some, performance-based design seems like a new concept. However, since the birth of engineering as a profession, most engineering has been executed in an essentially performance-based design environment. The application of this design philosophy to the design of fire protection systems is often advantageous.

Performance-based design can be thought of as a design process where calculations, modeling techniques, and risk assessment approaches are used to predict the capability of a contemplated design and to show that the design will meet specific performance criteria, indicating that a specific design objective or set of objectives has been met. This environment is very different from the prescriptive design environment with which most fire protection practitioners are familiar. The National Fire Protection Association (NFPA) has assumed a leadership role in formulating the concepts that make the development of performance-based codes and standards possible. As part of that effort, this document provides a review of the performance-based design concepts for the fire alarm system designer and technician.

Prescriptive Design

In the current environment of prescriptive building and fire codes, the process of design is largely a practice of complying with a set of design features implemented according to a design standard. That design standard specifies the features a building must possess, based on its size and contemplated use, and stipulates exactly how the building features are to be designed. These prescribed building features have usually been derived from the analysis of past fire experience and building failures. The locally adopted construction codes reflect a consensus among the building community on how to prevent specific adverse effects resulting from expected fire scenarios.

Before a building is permitted to be occupied, the owner must demonstrate to the local building code enforcement authorities that the building is safe. The prescriptive requirements in the building code define the features the building must possess for it to be deemed safe for occupation. If the building does not include all of the required construction provisions, it is presumed unsafe. In that case, the building official is typically authorized to withhold a certificate of occupancy, denying the owner the use of the building.

The design process in a prescriptive environment generally begins by defining the use group or occupancy type of the contemplated structure. When an architect categorizes a building or space as a particular use group, he or she is accepting a set of assumptions regarding the anticipated type and quantity of combustibles, probable sources of ignition, number of occupants, and capabilities of the occupants for that building or space. None of these assumptions are explicitly stated, nor are the expectations regarding the performance of the structure under fire conditions. The assumptions are implicit in the prescriptive requirements.

The design process is then reduced to applying the prescribed design features. The designer does not determine whether those features are necessary or sufficient to attain the intended level of fire safety for the particular structure. It is assumed that compliance with the prescriptive criteria will yield a safe building. There are more than one hundred years of experience to substantiate this assumption.

Codes and standards written in prescriptive terms are often referred to as "cookbook codes." As the user follows the design requirements in the code, there is little opportunity or incentive to consider the design basis for the fire alarm system.

The designer who designs a facility in accordance with a prescriptive code must remain mindful that the objectives of the code writers are not necessarily the same as those of the building owner or operator. The objectives of the code writers are to prevent the building from injuring citizens or to prevent a failure of the building that would adversely affect the property value of its neighbors. The building owner often has a high level of interest in preserving the value of the building and its contents, and the building occupant has an interest in maintaining the use of the building. Insurers for both the owner and occupant have an interest in minimizing insured losses including property, business continuity, and possible environmental impacts. These different objectives often result in the addition of capabilities and features to a fire protection system that exceed the minimums established by the relevant building code. This is often seen in the context of fire alarm system design.

Furthermore, most assume that if the fire alarm system complies with the building code or NFPA *101®*, *Life Safety Code®*, and if the installation complies with *NFPA 72,* it will provide sufficient early warning of a fire regardless of the nature of the fire, where it originates, and the objectives for the system. The purpose in paragraph 1.2.3 of *NFPA 72* states: "This Code establishes minimum required levels of performance, extent of redundancy, and quality of installation but does not establish the only methods by which these requirements are to be achieved." As indicated, the required levels are minimums.

Many design issues are not addressed in the regional building codes or *NFPA 72* because they are relevant only for a subset of facilities and are not appropriate for inclusion into a minimum compliance consensus standard. Designing to a minimum prescriptive code does not guarantee early warning of a fire. If the fire is remote from the detection devices, notification can be delayed until the fire grows sufficiently large to produce effects that finally cause a detector to transition to the alarm state. Owners who accept the minimum requirements of the codes may not have the benefit of the increased performance that can be attained from a fire alarm system designed to meet their specific goals and objectives.

Thus, while the construction code requirements reflect a set of objectives, those objectives are not explicitly stated. Furthermore, the prescribed building features do not necessarily represent the only means by which the implicit objective can be achieved. For any given objective, there are a number of means by which it can be achieved. Consequently, occasions do arise where prescriptive codes and standards rule out a solution that makes perfectly good sense for a given application.

PERFORMANCE-BASED DESIGN

Performance-based design is a process in which the ability of the design to achieve a certain objective is demonstrated by means of calculations and/or computational modeling. A performance-based design relies on principles of mathematics, physics, and engineering, whether it is used to produce a building, fire protection system, or bridge. Rather than rely on a set of prescribed design requirements that have evolved from years of experience, the designer develops and evaluates the design in terms of its ability to achieve the performance objective.

In other engineering disciplines, this method is the norm rather than an exception. For example, an engineer designs a bridge to support a design load under the range of conditions expected at the contemplated location. No code spells out the size of the beams, footings, or suspension cables. The engineer performs calculations to determine whether each element in the structure is capable of supporting the load anticipated under the conditions of use. In the case of an aircraft, the design process begins when someone defines the payload, range, and cost of the contemplated airplane. The objectives for the finished product then lead to specific design and performance

criteria. These criteria relate to the engine thrust, wing dimensions, cruising altitude, required runway, and so forth. The designer benchmarks each of these criteria against the overall objectives of the contemplated aircraft. During the process, the designer may make concessions, which effectively are changes in the goal or objectives. Eventually a design emerges. If the designer has done the job properly, the prototype airplane flies, as well as fulfills the various operational objectives of the purchaser.

In a performance-based design environment, the design of a fire alarm system begins with an objective — perhaps to provide an alarm sufficiently early to permit occupants to leave before the loss of tenability. Specific, quantitative criteria are then developed regarding what smoke concentrations and temperatures establish the limits of tenability. Various fire scenarios are considered. Often, a *t*-square fire is assumed. See Exhibit 1 for *t*-square fire growth curves categorized by fire growth rate to 1055 kW. The categories are ultrafast (75 seconds), fast (150 seconds), medium (300 seconds), and slow (600 seconds). The exhibit also indicates some materials in each category. Fire models can be used to determine how long tenability persists in the occupied compartments and the routes to means of egress. Usually the same fire model can be used to predict how long it will take the fire alarm system to detect that fire. The time point of detection starts the notification period — the amount of time needed for the occupants to conclude that there is a fire and that they must leave the building. Egress models are applicable in determining how long it will take the occupants to vacate the building completely. The loss of tenability time is compared to the sum of the notification and egress times to determine if all of the occupants are able to vacate the building before tenability has been lost. This process is generally repeated for one or several credible worst-case fire scenarios to develop a level of confidence that the system will achieve the objective over a range of fire and occupancy scenarios possible for the building.

In most facilities, a fire alarm system is only one part of the fire protection strategy for the building, facility, or process. Yet it often plays a crucial role in initiating a tactical response to the occurrence of a fire. When a fire alarm system is designed and installed in compliance with a prescriptive building code requirement, that role has been defined, tacitly if not explicitly, by virtue of the existence of the requirement. The fire alarm technologist and technician should be made aware of how the fire alarm system fits into the overall fire protection strategy for a given building. In a performance-based design environment, the fire protection strategy establishes a defined role for the fire alarm system. When performance-based design methods are used, an understanding of the interdependency of all the fire protection features is critical.

EXHIBIT 1

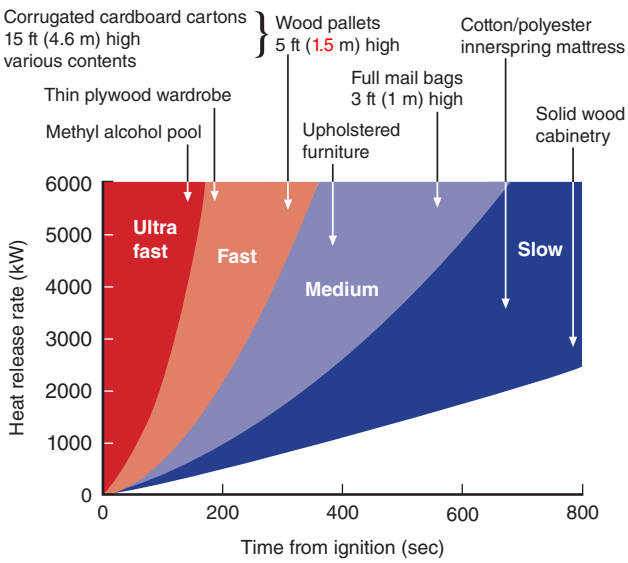

The t-Square Fire Curves for Various Fire Categories. (Source: NFPA Fire Protection Handbook)

In most states, the design of fire alarm systems is required to be performed by state-licensed professional engineers. Performance-based designs must always be made by an engineer knowledgeable in principles of fire protection engineering. When undertaking the design of a fire alarm system in either the prescriptive or performance-based design environments, these principles must be applied judiciously.

The fire protection engineer uses the building design, type of construction, water supplies, fixed suppression systems, fire alarm systems, fixed extinguishing systems, off-site reporting, and fire service capabilities as essential elements in the fire safety strategy for the building. Each of these elements interacts with, and often relies on, one or more other elements to achieve the final objective of a fire-safe building. When a change is made to one of those elements, changes must often be made to one or more of the other elements to maintain an equivalent level of fire safety. The interrelation and interdependency of the various elements of the facility fire safety features become far more apparent when an engineer considers performance-based design. When a system is designed using performance-based methods, the design remains

valid only as long as all of the building features and other fire protection systems remain. If other building features and systems are modified, the design of those systems must be re-evaluated to verify that the modifications did not make a material impact on the design. Even changes as simple as the replacement of furniture can invalidate a performance-based design.

Changing the furniture, for example, can change the fuel load and fire growth parameter of the probable fires, changing the requisite response time of the fire detection and fire suppression or extinguishment to control the fire to the assumed maximum heat release rate. Consequently, when an owner chooses to rely on a performance-based design approach, there will be a continual need to re-evaluate use changes as they affect design decisions to ensure that the objectives are still achieved.

THE PERFORMANCE-BASED DESIGN PROCESS

Performance-based design is a process, and there are two very important things to remember about that process. The first is that the design methods normally associated with performance-based design can lead to erroneous conclusions and fundamentally flawed designs when the design method is used outside the context of the performance-based design process. The computational method for predicting the response of a fire detection device only provides a number. That number is not a design. The number is one of many that are then used to support a design. For example, a response calculation predicts the response of a smoke detector to a 100-kilowatt growing fire in 60 seconds. Is that soon enough to meet the design objectives? That conclusion cannot be made until a lot more is known about the scenario. The design is derived from the results of numerous calculations and consideration of relevant factors.

Second, performance-based design is not generally used for an entire building. The designer doesn't look at an architectural site plan and decide to use performance-based design on the project. Instead, performance-based design is most often used where the prescriptive design cannot be used rationally. For example, a fire alarm system is to be designed for a large, multistory office building with a central, multistory atrium space used as a cafeteria and general assembly area. The designer will probably use a prescriptive design method for determining the type of initiating devices and their spacings in the offices and the corridors serving those offices. However, a performance-based design method may be used for the atrium because the prescriptive spacing design requirements for smoke detectors do not adequately address the fire detection and operational needs for a multistory atrium space.

The *SFPE Engineering Guide to Performance-Based Fire Protection* defines *performance-based design* as a process that includes "an engineering approach to fire protection design based on: (1) agreed upon fire safety goals and objectives; (2) deterministic and/or probabilistic analysis of fire scenarios; and (3) quantitative assessment of design alternatives against the fire safety goals and objectives using accepted engineering tools, methodologies, and performance criteria." The methods of performance-based design will be discussed later, but remember that performance-based design is a process.

The process of developing a performance-based design begins with the identification of all the stakeholders in the finished building. The *SFPE Guide* also defines *stakeholder* as "one who has a share or an interest, as in an enterprise." In the context of the fire alarm system, the stakeholder is an individual (or a representative of a group of people) having an interest in the successful completion of the project or the operation of the facility in which it is to be installed. The reason for having an interest in the successful completion of a project may be related to legal, operational, financial, or safety concerns. When designing in accordance with the performance-based design process, it is critical to identify the stakeholders at the beginning of the project. The stakeholders each contribute to the identification of the goals and, subsequently, objectives for the project. They each also approve the methods that are used to achieve these goals and objectives.

The *SFPE Guide* identifies the following individuals as possible stakeholders:

- Building owner
- Building manager
- Design team
- Authorities having jurisdiction (AHJs)
  - Fire
  - Building
  - Insurance
- Accreditation agencies
- Construction team
  - Construction manager
  - General contractor
  - Subcontractors
- Tenants
- Building operations and maintenance
- Emergency responders
- Peer reviewer

Each of these individuals brings to the project her or his own viewpoint and performance goals. Each has a role to play and something to contribute during the design process. Some of the stakeholders' goals may be the same; in other cases, the goals may be widely divergent. The goal of the final design is to be acceptable to all of the stakeholders. Consequently, the design should address the goals of each stakeholder. Again, to quote the *SFPE Guide*, "It is imperative for the engineer to identify the stakeholders in order to obtain acceptance of the performance-based strategies used in the [design] process."

Once the stakeholders have articulated their goals, the fire protection engineer helps them translate those goals into specific design objectives. While a goal is expressed in general terms, objectives are specific and can ultimately be measured quantitatively. For example, perhaps the owner's goal is to get all of the employees out of the building unharmed in the event of a fire. In this case, the objective can be stated as "completing all occupant egress before the loss of tenability." Methods and research data can be employed to estimate whether all of the occupants have left at any particular moment in time. Calculation and modeling methods make it possible to quantify tenability threats in terms of carbon monoxide concentration, smoke obscuration, temperature, radiant flux, and so on, at various times during a hypothetical fire. Therefore, the process of translating goals into carefully worded objectives leads the stakeholders toward explicit performance criteria.

Once the stakeholders agree on the design objectives, the fire protection engineer must then reduce those objectives to specific performance criteria. Performance criteria are quantitative and can be measured to an appropriate level of precision. Tenability criteria are expressed as a concentration in parts per million of carbon monoxide, radiant flux in watts per square centimeter, air temperature in degrees Kelvin, visibility in optical density, and so on. Occupant egress rates can be quantified, leading to predictions of the number of people still within the facility at any time during a hypothetical fire. These performance criteria become the benchmarks against which candidate designs are measured. If a design does not achieve a level of performance equal to or better than the benchmark performance criteria, it cannot achieve the performance established by the stakeholders' goals and objectives.

For example, one objective of the fire alarm system might be to warn the occupants of a fire in sufficient time to allow them to extinguish the fire with hand-portable fire extinguishers before the fire suppression sprinkler system operates. This objective can be evaluated quantitatively for a given set of hypothetical circumstances. Assume that the fire suppression sprinkler system will respond to a 1.0-megawatt (MW) fire. This assumption can be checked for validity with a number of computational methods. If an employee will need 1 minute to react to a fire alarm signal, find a fire extinguisher, take the extinguisher to the fire, and deploy the extinguishing agent, then the fire alarm systems must be capable of detecting the fire at least 1 minute sooner than the fire suppression sprinkler system. (This example should not be construed to suggest that 1 minute is a realistic time interval for any particular situation.) A *t*-square fire growth model can be used to calculate how large the fire will be 1 minute before it attains a heatrelease rate of 1.0 MW. A suitable numerical value for alpha (α) is obtained from fire protection engineering references and plugged into the *t*-squared equation to obtain a heat release rate:

$$Q = \alpha t^2$$

where:
Q = heat release rate (kW)
α = fire intensity coefficient (kW/sec^2)
t = time (sec)

This calculated fire size then becomes the response criterion for the fire alarm system. The fire detection system must respond to a fire of 1.0 MW – X, where X is the magnitude of the fire growth during the 1 minute response time of the personnel to the fire alarm signal. In this manner, performance criteria that have been derived from the stakeholder goals and objectives become the minimum compliance criteria in the performance-based design environment.

The designer then develops candidate designs. The designer then can use the fire size criterion and fire detector response models to establish the appropriate spacing for detectors. The performance of each candidate design is modeled using any of a number of computational methods, tools, or modeling programs. These models produce a prediction of the performance of the system to a set of fire scenarios. Once the fire protection engineer has developed a design that achieves the performance criteria derived from the stakeholder objectives, the fire protection engineer presents the design to the stakeholders for review and acceptance. Only after all of the stakeholders have accepted the design can the fire protection engineer begin writing specifications and produce drawings.

The performance-based design process derives the design features directly from the explicitly stated goals and objectives the stakeholders have for the facility. Goals are established. Those goals lead to concrete objectives.

Those objectives lead to explicit, measurable performance criteria. Computational methods are then used to demonstrate that the system achieves the objectives by meeting the performance criteria that were derived from those objectives. The goals and objectives established by the stakeholders become the minimum compliance requirements for the design rather than a set of prescribed design features, as is found in current codes. The designer proves the system design meets the performance criteria obtained from the design objectives through calculations and computational modeling. The methods used for each step in the process should be well documented.

REASONS FOR A PERFORMANCE-BASED DESIGN METHOD

The current system of prescriptive codes and standards provides a level of fire safety in the newly built environment that is acceptable to the public at large. Recently constructed buildings provide greater fire safety than those built even a decade ago. Despite this positive trend, the need to use resources wisely has become the fundamental driving force behind the transition to a performance-based design environment.

The inherent flexibility in the performance-based design method permits the selection of fire protection features based on actual need rather than legislated conformity. Where the design of fire protection systems using performance-based design is allowed by locally adopted codes and the jurisdictional enforcement authorities, the design flexibility results in a greater efficiency in the use of fire protection resources. In some instances, the routine application of the requirements of current prescriptive codes results in a design that commits fire protection resources to systems that are not likely to make significant contributions to the fire safety of the structure.

For example, general purpose sprinkler heads are often installed in an atrium space at ordinary hazard spacing, 70 ft or 80 ft (21 m or 24 m) above the floor. Engineers might have specified spot-type smoke detectors in that same location because of a code requirement. A quick calculation shows that a fire would have to reach a heat release rate of approximately 14,200 Btu/sec (15 MW) (approximately equivalent to an 80 ft^2 [7.5 m^2] pool of gasoline in free burn) before the first sprinkler head would actuate. Yet, under these conditions, the water discharging from those sprinkler heads would probably fail to penetrate the fire plume to the flame surface where it could contribute to controlling the fire. It would be expected that a smoke detector installed at such a height would need a similar size fire before an alarm response would be attained. The smoke detectors would certainly not meet the implied goal of early warning. Finally, since construction codes severely limit the quantity of combustible materials in assembly spaces, it is possible that the available fuel load in the space could not produce the needed 14,200 Btu/sec (15 MW) fire. So neither the sprinkler system nor the smoke detection system can be expected to achieve the implied design objectives in the event of a fire. The fire safety objectives for such a space remain the same as they are for the remainder of the building, but the prescribed means by which those objectives are presumably met are ineffective. This is a classic case of designing a building space by including the design features prescribed by the relevant building code and fire code, rather than designing fire protective features that provide a given level of fire safety. A design is needed that is appropriate to the space.

Sprinklers have proven to be extremely effective in controlling fire, by holding the fire to the compartment of origin, protecting the compartmentation, and maintaining structural integrity until the fire is extinguished. Accordingly, the model building codes have adopted a requirement for most occupancies to equip all such compartments with sprinkler systems. Undeniably, smoke detectors provide early warning in most fires, so the model building codes have adopted requirements for smoke detection for many occupancies. Numerous historical fire incidents have shown that limiting the quantity and type of combustibles in compartments enhances the survival prospects of the occupants and the protection of the structure. Therefore, requirements relating to the flame spread rating of wall coverings and interior furnishings for public places have become incorporated into the model building codes. Lastly, the model building codes also might require 2-hour rated compartment construction under some circumstances. Required construction provides a passive compartmentation of the fire, limiting the probability of fire spread to adjacent areas.

Separately, each of these building code requirements offers valid strategies for limiting the hazard of a fire in the particular compartment. To a significant degree in the preceding example, the requirements for sprinklers, smoke detectors, and fuel load limitations address the same general goal: to limit the size of a fire. Considering the fire resistance rating required of the compartment in the atrium example, at least four required fire protection strategies address the same fundamental objective: contain the fire to the compartment of ignition. Is it necessary to provide all of these required features for the same compartment?

The current prescriptive building and fire codes do not explicitly address this question, nor do they provide a means to quantify the contribution each feature makes to the overall fire safety of the facility. The result is required redundancies.

There is nothing wrong with redundancies as long as they are intentional and based on a rational analysis. The logic usually used to justify redundancy is if strategy A doesn't work, then strategy B is there to fall back on. A fire protection strategy that uses redundant features is more reliable than a strategy that relies on a single feature, assuming that all of the fire protection features have equivalent reliability. If the fire compromises one feature, then the other still maintains the safety of the structure.

If the redundancies were intentional, wouldn't it indicate that there was a tacit concern for the fundamental reliability of the "required" building features? How can the reliability of these required fire safety features be quantified? How many redundancies are enough? By the sixth or seventh set of redundant features, isn't it fair to ask how much incremental benefit is accrued from the last set?

If this same atrium space were addressed in a performance-based design environment, the fire safety objective would remain the same: limit the spread of a fire to the compartment of fire origin. The engineer would not be limited to the choice of means adopted by a building code. The engineer is free to develop any means that can be shown to accomplish the fundamental performance objective. Appropriate construction of the walls and doors can contain a fire involving the worst-case fire load. The fire load can be limited. The fire can be suppressed. The fire can be detected early in its development and manually extinguished before it breaches the compartment. Any of these approaches can achieve the basic objective of confining the fire to the compartment of origin. In the performance-based environment, the engineer responsible for designing the fire protective features is free to select one or more means as part of an integrated fire protection strategy that best fulfills the objective at an acceptable level of reliability.

The use of a performance-based design method does not necessarily mean that the engineer will not employ intentional redundancies to ensure that the objective is met in the event of a failure of one of the fire protection features. However, the engineer will base the selection of fire protection features on a rational analysis of the possible fire scenarios for a particular compartment and the computed mission effectiveness of the fire protection features. Then, he or she will select the most efficient means to accomplish the objectives in the event of that fire. Thus, performance-based design provides the engineer with the flexibility to address unique structures and sets of performance objectives that might not have been contemplated during the drafting of a model building or fire code. Performance-based design also provides a means of achieving society's fire safety objectives in unusual and unique environments.

For example, an eighteenth century house that has been restored to its original condition is now used as a site offering education and lectures on local history. Conflicting goals surface immediately. The social value of the structure relies on its being preserved exactly as it existed in the eighteenth century. Yet one of the means to preserve this heritage will change the structure by the addition of modern fire detection and suppression. These additions will limit the damage to the building if a fire occurs. Furthermore, because the public assembles in this structure, there is a social value in providing for a level of occupant life safety consistent with the expectations of the community in general. This life safety objective also might require changes to the structure. For example, it might be necessary to widen or add doors to provide sufficient egress capacity.

Certainly, the historical value will erode the least when the changes to the building are minimized. With a purely prescriptive code, the designer of the fire protection systems has few alternatives. The authority having jurisdiction may not allow noncompliance with the prescriptive requirements of the code because he or she does not want to assume the responsibility. With a performance-based environment, the solution becomes a "reasonable engineering approach" to finding acceptable methods to meet the fire safety goals. The inherent flexibility of the performance-based design environment also enables the designer to satisfy conflicting social values with creative design. The inherent flexibility of performance-based design permits the selection of fire protection features based on the design goals and objectives, allowing the engineer to tailor the fire protection features to the specific structure and circumstances.

Obviously, only qualified designers working with the building design team should undertake the design of engineered fire protection systems in the performance-based context. Because many of the fire protection features of the structure are interdependent, a thorough understanding of each of those features and their interdependencies is critical. In the case of fire alarm systems, the designer should possess substantial design experience not only with fire alarm systems, but also with the other interdependent fire protection systems including the passive fire resistance and

compartmentation, structures, HVAC systems, sprinkler fire suppression systems, fire service response capabilities, special extinguishing systems, and the principles of fire protection engineering, before undertaking a performance-based design project.

The designer should be included in the building design team as early as possible, ideally beginning with the feasibility stage. The designer of the fire alarm system addresses a range of fire protection issues that affect the fire alarm system design. As the owner and the authority having jurisdiction establish their fire safety goals and objectives, the fire alarm system designer must be able to advise them of the feasibility and prerequisite conditions for attaining those goals. This design environment places far greater demands on the designer.

The locally adopted construction codes generally do not state explicitly what level of functional performance the prescribed design attains. Lacking clear performance objectives, how can a designer develop a performance-equivalent alternative design? Chapter 18 of *NFPA 72* includes performance criteria along with the prescriptive criteria for visual notification. However, the prescriptive requirements of other chapters are not as easily restated as performance-based criteria. Fortunately, the fire scenario evaluation methods employed in the process of performance-based design can be applied to the prescribed features in a prescriptive code to deduce the apparent performance objective underlying a prescriptive feature. In this manner, the designer must use that same method to demonstrate that an alternative design meets or exceeds the performance implied by the prescriptive design. How can the designer achieve the objectives of society? Answers to this question emerge with performance-based codes.

THE PERFORMANCE-BASED DESIGN PROCESS: EXPLICIT STATEMENT OF FIRE PROTECTION GOALS

The performance-based design process begins with explicitly stated fire safety goals. The stakeholders must answer the question: "What level of fire safety does society expect from the building?" The goals generally reflect a consensus of social values. Until the basic goals relating to life safety, protection of adjacent properties, environmental impact, and fire fighter safety are in a performance-based code, the fire protection engineer must lead the stakeholders in developing their own goals.

Other fire safety goals relating to mission continuity might be established by the owner and insurance authorities. For example, a building should maintain its structural integrity during certain situations such as a fire. This goal could include maintaining structural integrity even after all of the combustible material in it has burned. The goal may also require that a structure maintain its integrity during, and in spite of, fire-fighting activities. Another fire safety goal might be to warn the occupants of a fire in sufficient time to allow them to escape from imminent danger without harm. These goals may seem so general that they add nothing to the design process. However, they are important to ensure that all of the relevant social values are reflected in the design of the building and its fire protection systems.

Fire protection goals generally address a range of issues relating to occupant life safety, fire fighter life safety, citizen property rights, property protection, the continuity of the facility mission, the preservation of heritage, and the environmental impact of the fire. Society puts these issues in a hierarchy, reflecting consensus social values. Avoiding a long-term environmental impact might be considered more important than limiting property damage. Therefore, the use of a very effective extinguishing agent for the protection of property that also produces a long-term environmental degradation would not be permitted. However, society will permit an airline to use the same extinguishing agent to extinguish engine fires on their commercial aircraft. In this case, society values the obvious life safety goal for the occupants of an airplane at a higher level than the environmental goal.

Further examples of fire safety goals are listed in the *SFPE Engineering Guide to Performance-Based Fire Protection*, including the following efforts:

- Minimize fire-related injuries and prevent undue loss of life
- Minimize fire-related damage to the building, its contents, and its historical features and attributes
- Minimize loss of operations and business-related revenue due to fire-related damage
- Limit the environmental impact of the fire and fire protection measures

THE PERFORMANCE-BASED DESIGN PROCESS: EXPLICIT STATEMENT OF FIRE PROTECTION OBJECTIVES

Once the stakeholders have agreed on the fire safety goals, they must derive specific objectives that reflect how and to what degree the system must fulfill those goals. (See NFPA *Primer #1: Performance-Based Goals, Objectives and Criteria*.) Although the objectives are derived from the goals, they are more specific and quantifiable. If the

goal is to ensure that there is no loss of life due to fire in the building, then one objective derived from this goal is that the building should provide sufficient warning to all occupants in sufficient time to permit them to escape or relocate without loss of life or injury. As the fire protection engineer leads stakeholders through the process of refining goals into objectives, the fire protection engineer is beginning the process of developing potential strategies. The use of occupant warning as the means to attain the goal implies the use of a fire alarm system as part of the occupant protection strategy. This objective also presumes that the design of the building provides a means of egress to the building exterior or to an area of refuge. Both of these fire protective features must be in place to attain the life safety objective.

THE PERFORMANCE-BASED DESIGN PROCESS: QUANTITATIVELY EXPRESSED PERFORMANCE CRITERIA

Once the stakeholders have established explicit objectives, the fire protection engineer develops quantitative performance criteria that provide the yardstick for measuring performance and attainment of the design objective. The objective may be providing warning "in sufficient time to permit them [the occupants] to escape or relocate without loss of life or injury." A fire protection engineer will measure this objective using performance criteria that relate specifically to the process of notifying occupants and their response to the signal. These include the following:

- Sound pressure level needed to warn the occupants
- Number of occupants
- Condition of the occupants
- Egress speed of the occupants along the egress path
- Length of the egress path
- Size of the fire at the moment of detection
- Rate of fire growth
- Rate of deterioration of the tenability in each of the compartments, as well as along the egress route

The designer must quantify each of these criteria before the process of outlining designs can begin.

For example, a quantitative criterion for the warning of the occupants must exist. Research has shown that audible notification with sound pressure levels of 15 dB above average ambient or 5 dB above momentary ambient peaks lasting more than 60 seconds effectively warns occupants with normal hearing. For conscious, hearing-impaired occupants, visual notification intensities of 0.0375 lm/ft^2 (0.4037 lm/m^2) have been shown to be sufficient to warn such occupants. Consequently, the designer could formulate the performance criteria for occupant notification to read as follows:

Occupant notification shall be deemed to have been provided when both of the following conditions occur:

1. Attainment in all occupiable portions of the compartment; Temporal Code-3 audible notification having a sound pressure of at least 15 dB above average ambient or 5 dB above momentary maximum (greater than 60 seconds duration) ambient
2. Attainment in all occupiable portions of the compartment; visual notification producing an effective luminance of 0.0375 lm/ft^2 (0.4037 lm/m^2) with an integrated flash rate no greater than 2 Hz and no less than 1 Hz.

In very large spaces, the 0.0375 lm/ft^2 (0.4037 lm/m^2) effective luminance might be impossible to attain with currently available notification appliances. The effective luminance criterion was established assuming indirect viewing — the occupant is not looking in the direction of the notification appliance but is instead responding to the reflected light off walls, ceiling, and floors. In the case of large atria, auditoria, and other similar spaces, the designer might rely, instead, on direct view and use calculations to show that the radiant intensity of the notification appliances in direct view mode is sufficient to achieve notification. (Additional information on these types of applications is in A.18.5.4 of *NFPA 72*.)

The *SFPE Engineering Guide to Performance-Based Fire Protection* designates the following areas in which performance criteria may be needed:

- *Life safety criteria.* These criteria address the survivability of persons exposed to fire and fire products.
- *Thermal effects.* These effects include both the effects on the occupants and on materials and equipment.
- *Toxicity effects.* These effects, primarily on humans, consist of reduced decision-making capability and impaired motor activity leading to incapacity or death.
- *Visibility.* This criterion affects the ability of occupants to safely exit from a fire.
- *Non-life safety criteria.* These criteria address issues relating to acceptable damage levels to property.
- *Ignition of objects.* These effects include the source of energy and what can be expected to ignite.

- *Flame spread.* These effects assess the propagation of flame once ignition has occurred.
- *Smoke damage.* This criterion includes smoke aerosols and particulates as well as corrosive combustion products.
- *Fire barrier damage and structural integrity.* This criterion addresses the loss of fire barriers resulting in fire extension, increased damage, and structural collapse.
- *Damage to exposed properties.* This criterion may be developed to measure the potential for fire spread or damage to exposed properties.

The *SFPE Guide* provides references to assist the designer in determining how to account for the list of performance criteria given.

THE PERFORMANCE-BASED DESIGN PROCESS: DEVELOPING THE VERIFICATION METHODS FOR DEMONSTRATING PERFORMANCE

Once the stakeholders have agreed on the fire protection goals, objectives, and performance criteria, the fire protection engineer must develop a method for demonstrating performance. The method usually employs a means of modeling how a fire of given characteristics will impact the facility. There is a range of conceivable fire scenarios for any contemplated structure, but usually there are only a few that represent the credible worst case. These scenarios include a rapidly developing fire of maximum credible fuel load and a slowly developing fire that produces extensive non-thermal smoke damage. These fire scenarios are then modeled using computer modeling programs.

Computer modeling programs exist that iteratively solve the equations that describe fire plume dynamics, fluid flow, heat transfer, and other physical phenomena involved in a fire and their impact on the building compartment. These programs require detailed input data about the particular compartment, fire, and ambient conditions. The programs account for all of the heat and mass evolved from the fire to predict the impact the fire has on the compartment and fire protection equipment.

Even though computer fire modeling is a fundamental part of the process of demonstrating performance, engineers address many issues in a performance-based design with algebraic formulas. Annex B, Engineering Guide for Automatic Fire Detector Spacing, of *NFPA 72* provides numerous algebraic formulas for solving specific aspects of the performance prediction of a fire alarm system. *The SFPE Handbook of Fire Protection Engineering* provides additional formulas.

It is critical that the method used to demonstrate the performance of the fire alarm system be validated to the greatest extent possible using documented research. First principles of physics or the reduction of experimental data to engineering correlations generally form the basis for performance prediction methods used by the designer. The performance-based design documentation must identify the source of the correlations or physical relation used to demonstrate performance for review by the authority having jurisdiction.

The sources, methodologies, and data used in performance-based designs must be based on technical references that are widely accepted and used by the fire protection community. As advised by the *SFPE Guide*, "The engineer and other … stakeholders should determine the acceptability of the sources and methodologies for the particular applications in which they are used." The *SFPE Guide* provides direction for what constitutes a valid technical reference.

THE PERFORMANCE-BASED DESIGN PROCESS: COMPARISON OF PREDICTED PERFORMANCE WITH PERFORMANCE CRITERIA

Once the stakeholders have agreed on the goals, objectives, performance criteria, and the tools to be used to demonstrate performance, the designer can research design approaches. Usually, the process of deriving performance objectives from stakeholder goals and reducing those objectives to quantitative criteria will lead to design approaches. This is where the designer often draws on the experience accrued over the years dealing with similar structures.

Usually, the designer outlines each candidate design in a narrative form, and the critical performance criteria for the design are identified. The candidate designs are essentially hypotheses that must be tested using the verification methods that the stakeholders have agreed are valid measures of performance.

The performance demonstration starts with describing the fire scenarios. The choice of fire scenarios establishes the severity of the fire challenge the facility is expected to handle. Therefore, the choice implies value judgments on relative probabilities of occurrence and acceptable losses. Usually, an analysis of the range of types of combustibles, the extremes of combustible quantity, extremes of ambient conditions, extremes of asset vulnerability, and other circumstances lead to a limited number of worst-case scenarios. The engineer presumes that if the proposed system can achieve the design objectives under credible worst-case conditions, it will achieve the objectives under

less arduous conditions. Furthermore, the designer should obtain input from the stakeholders in this part of the process.

Once the engineer defines the scenarios, a fire model is used to predict the impact of the fire on the compartment. The rate of heat release and rate of fire growth are used in a computer fire model to predict the development of the ceiling jet, its velocity, and its temperature. The model uses the ceiling jet dynamics to predict the rate of formation of a ceiling layer and, hence, the rate of interface descent. The computer fire model provides estimates of smoke and heat detector response time as well as a determination of the response time for the first sprinkler head. The engineer uses the predicted time for the upper layer to descend to a level that impedes egress to infer the time available for escape.

The response of the occupants is also modeled. Occupant reaction time and egress velocity are used as input parameters in egress models to determine how rapidly the occupants can vacate the facility under the fire scenario conditions. Other issues such as the rate of heat transfer through a fire barrier are addressed with other models or algebraic relations.

Eventually, the designer has a body of data available to compare the performance of the proposed design to the performance criteria derived from the objectives established for the building. This comparison determines whether the proposed design passes or fails. See Exhibit 2. If the design passes the evaluation of the first scenario, the designer moves to the next scenario and repeats the process. If the design fails to meet these conditions, the engineer must develop a modified design and put that design to the same test. The designer repeats this evaluation process until a design emerges that achieves the design objectives for all contemplated fire scenarios.

EXHIBIT 2

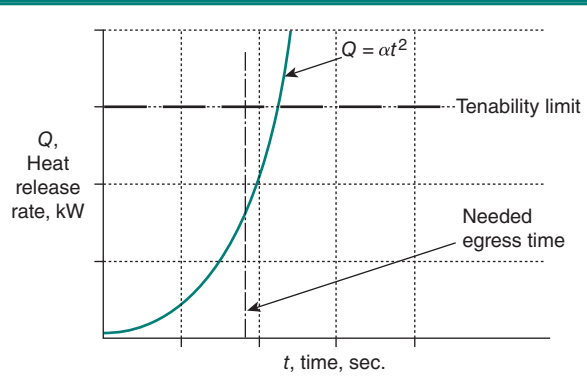

Comparison of Predicted Egress — Time versus Tenability Limit. (J. M. Cholin Consultants, Inc., Oakland, NJ)

Once a design has been shown to achieve all of the performance objectives for all of the fire scenarios, the designer is then ready to complete the design documentation and commence developing specifications and drawings for the systems to be used. The performance-based design process is more involved than the prescriptive design process. Consequently, performance-based design is usually reserved for situations where the prescriptive approach is clearly inadequate or not applicable.

CAUTIONS AND CAVEATS FOR THE DESIGNER

The analysis of fire alarm systems and the development of a system design based on performance objectives and criteria are one step in the process of developing a fire protection strategy for the building as a whole. Although there are some very compelling advantages of performance-based design, there are also important disadvantages.

Performance-based design does provide a method that enables the designer to tackle difficult and unique hazards either where consensus standards do not outline an accepted protection method or where no consensus standard exists. However, performance-based design relies entirely on the designer's understanding of the hazard area, as well as an understanding of the process and progress of the potential fires in that hazard area. Failure to consider material aspects of the hazard area and how a fire will develop in that area can lead to fire protection systems that are doomed to failure. Consequently, the performance-based design of fire alarm systems requires a licensed professional engineer to perform the design. The designer should be familiar with the principles of fire protection engineering and apply these principles judiciously.

The process of performance-based design often relies on the use of computer fire models. Some models in the public domain are no longer supported by the developer. In some cases, the validation of the computational routines nested within the software is tenuous or entirely lacking. In other cases, the software has minimal documentation. Consequently, the designer must use only the model within the range of parametric variation over which the developer has validated the model.

The level of precision of the available performance measurements for fire alarm initiating devices is not equivalent to the level of precision generally implied by the results of the computer modeling techniques. The most critical issue in evaluating the performance of a fire detection system in a performance-based environment is the prediction of the time at which the system responds

to the design fire. How big or small a fire will be detected by the detection portion of the fire alarm system? Sound validated performance metrics for heat detectors are available. Engineers can predict the response of sprinkler heads when the temperature rating, response time index (RTI) for the particular model of sprinkler head, ceiling height, ambient temperature, and fire heat release rate are known.

Similar information is available for heat detectors. Manufacturers of heat detectors are required to mark the detectors with their RTI values or publish the RTI values in the detector bulletin. Annex B includes a rough correlation between listed spacing and the calculated RTI to predict the response time of heat detectors in a given environment and to a given fire.

The prescriptive spacing for smoke detectors does not always align with a performance-based design. There is little technical basis for the prescriptive spacing requirements for smoke detectors; they have been derived historically. Nor can the sensitivity marked on the detector be used as a performance metric for smoke detectors. The detector sensitivity measured in the UL 268 laboratory smoke box is intended to serve for manufacturer quality control and may not be appropriate outside the context of that test. (See Sections 39 and 40 in UL 268, *Standard for Smoke Detectors for Fire Alarm Systems*.)

Predicting precise smoke detector activation times is best done by examining the field conditions at various smoke detector locations and evaluating the likelihood that field conditions at postulated smoke detector locations will result in an alarm condition. If there is sufficient minimum optical density, temperature rise, or velocity at the smoke detector location, then it is reasonable to conclude that the smoke detector would likely alarm. Work done by Geiman and further refined by Geiman and Gottuk represents a detailed review of numerous test series and of several types of indicators (i.e., optical density, temperature, gas velocity) and the associated varying threshold levels suggested over the years for estimating spot-type smoke detection response.

The work of Geiman and Gottuk points to a number of significant findings that are useful to identifying high probability smoke detector alarm thresholds for the purpose of performance-based design. The Fire Protection Research Foundation report, "Smoke Detector Performance for Level Ceilings with Deep Beams and Deep Pocket Configurations Research Project," reviews the works of Geiman and Gottuk and other potential threshold levels for smoke response. This report illustrates how smoke density, smoke gas temperature, and velocity are used to predict spot-type smoke detector response.

One way of predicting the response of a smoke detector is to adopt the simplifying assumption that in a flaming fire the plume's buoyancy serves as the driving force that conveys the smoke to the detector. This assumption allows a designer to model the smoke detector as a very sensitive heat detector, using the iterative method outlined in Annex B of *NFPA 72*. A second method incorporated into Annex B is a mass density approximation method. Both of these methods rely on performance criteria selected by the user. Any inaccuracy and lack of precision in these methods can lead to predictions of failure to achieve design objectives when, in reality, the system will meet the performance objectives. The reverse is also true. Consequently, these methods must be subjected to rigorous sensitivity analyses to ensure that a design based on these methods will achieve the design objectives.

Very little credible data exist regarding the relative reliability of various fire protection strategies. Unless the engineer can compare the mission effectiveness of a proposed fire protection strategy with the alternatives, he or she cannot make a legitimate decision between them.

Fire alarm systems equipment assembled from electronic components with documented failure rates can be assessed for equipment reliability using the methods outlined in the *Military Handbook for Reliability Prediction of Electronic Equipment*. However, contributions to the mission effectiveness of the fire alarm system are also made by the design, installation, and maintenance elements of the system. These elements are more difficult to assess.

When comparing a design that relies on a fire alarm system to some other strategy, the designer must compute the mission effectiveness of that other strategy using the same method used for the fire alarm system. In general, little information exists regarding the failure rates of system components. Consequently, estimates of the reliability of these systems must be used. In addition, the quality of the fire alarm system installation, testing, and maintenance has a great impact on the mission effectiveness of all active fire protection systems. The performance-based design environment both permits and demands that the designer evaluate these factors and incorporate them into the overall design of the building protection scheme.

Lastly, the performance-based design should be supported by a complete documentation of the entire decision-making process. There are no prescriptive requirements that can be used as a reference years after the project has been completed. Because any change in the facility can trigger the need for a reassessment of

the design, the design must be thoroughly documented, and the documentation must be maintained for the life of the structure. The documentation of the entire basis for developing the performance-based alternatives should include the following items to be considered complete:

1. *Project scope.* The project scope establishes the extent of the fire alarm system design and issues such as occupant characteristics, building characteristics, location of the property, fire service capabilities, utilities, environmental considerations, heritage preservation, building management, security, economic and social value of the building, the project delivery process, and the applicable regulations.
2. *Goals and objectives.* Goals and objectives include the general goals and specific objectives developed and accepted by all of the stakeholders.
3. *Performance criteria.* The performance criteria are quantitative measures that indicate attainment of the objectives. They must include how the engineer developed the criteria and what safety factors are used.
4. *Evaluation methods*. Evaluation methods explain how trial designs will be evaluated.
5. *Fire scenarios and design fires.* Fire scenarios and design fires establish the range of variation of conditions under which the design will be valid, including the following:

   - Form of ignition source
   - Different items first ignited
   - Ignition in different rooms of a building
   - Effects of compartment geometry
   - Whether doors and windows are open or closed, and at what time in the fire scenario they are open or closed
   - Ventilation, whether natural (doors and windows) or mechanical (HVAC, etc.)
   - Form of intervention (occupants, automatic sprinklers, fire department, etc.)

6. *Final design.* The final design details how the design meets the performance criteria.
7. *Evaluation.* The evaluation explains how to evaluate the design. What are the uncertainty factors? What are the safety factors?
8. *Critical design assumptions.* Critical design assumptions establish the limits of conditions and maintenance within which the system will achieve the design objectives and performance criteria.
9. *Critical design features.* Critical design features specify what must stay in place from a building design scenario to ensure the fire alarm system will continue to operate.
10. *References.* References are the sources of information used to develop the design.

CONCLUSION

As the fire protection community moves toward a performance-based code, an engineer could encounter performance requirements such as the following: "Fire detection systems shall be designed to activate before a fire reaches a size that represents an unreasonable hazard to the building occupants or the building." How an engineer approaches that requirement will depend on his or her understanding of basic fire protection engineering principles and the accepted procedure for developing a performance-based design.

The steps recommended for the process of developing performance-based approaches to a design problem can be summarized as follows:

1. Define the project scope.
2. Identify goals.
3. Define objectives.
4. Develop performance criteria.
5. Develop an evaluation method.
6. Develop trial designs.
7. Evaluate trial designs with fire scenarios.
8. Select the final design.
9. Develop a design brief.
10. Document the design.

This supplement has discussed the concept of performance-based design and what it is, and it has described the design process. Even with a performance-based design included in the code, most fire protection features for most facilities will be designed using the existing prescriptive criteria. However, as the need for greater design flexibility and efficiency increases, the trend toward a greater use of performance-based design methods will continue.

REFERENCES

References Cited

Geiman, J. A., "Evaluation of Smoke Detector Response Estimation Methods," Master of Science Thesis, University of Maryland, College Park, MD, 2003.

Geiman, J. A., and Gottuk, D. T., "Alarm Thresholds for Smoke Detector Modeling," *Fire Safety*

Science — Proceedings of the 7th International Symposium, June 16–21, 2002, Worcester, MA, International Association for Fire Safety Science, Boston, MA, Evans, D. D., Editor, 2003, pp. 197–208.

NFPA Fire Protection Handbook, 20th edition, National Fire Protection Association, Quincy, MA, 2008.

NFPA *Primer #1: Performance-Based Goals, Objectives and Criteria,* Revision 1.1, National Fire Protection Association, Quincy, MA, 1997.

NFPA *101®*, *Life Safety Code®*, 2018 edition, National Fire Protection Association, Quincy, MA.

O'Connor, D. J., et al., "Smoke Detector Performance for Level Ceilings with Deep Beams and Deep Pocket Configurations Research Project," Fire Protection Research Foundation, Quincy, MA, April 2006.

SFPE Engineering Guide to Performance-Based Fire Protection, 2nd edition, National Fire Protection Association, Quincy, MA, and Society of Fire Protection Engineers, Bethesda, MD, 2007.

SFPE Handbook of Fire Protection Engineering, 4th edition, National Fire Protection Association, Quincy, MA, and Society of Fire Protection Engineers, Bethesda, MD, 2008.

UL 268, *Standard for Smoke Detectors for Fire Alarm Systems,* 7th edition, Underwriters Laboratories Inc., Northbrook, IL, 2016.

U.S. Department of Defense, *Military Handbook for Reliability Prediction of Electronic Equipment,* MIL HDBK 217, U.S. Government Publishing Office, Washington, DC.

Further Reading

Custer, R. L. P., and Meacham, B. J., *Introduction to Performance-Based Fire Safety*, National Fire Protection Association Quincy, MA, 1997.

NFPA's Future in Performance-Based Codes and Standards, Report of the NFPA In-House Task Group, July 1995, National Fire Protection Association, Quincy, MA.

NFPA, *Primer #3: Performance-Based Fire Scenarios,* Revision 1.1, National Fire Protection Association, Quincy, MA, 1998.

NFPA, *Primer #4: Performance-Based Verification Methods,* Draft 9, National Fire Protection Association, Quincy, MA, 1999.

System Performance and Design Guide

ANNEX

C

This annex is not a part of the requirements of this NFPA document but is included for informational purposes only.

Chapter 23, Protected Premises Alarm and Signaling Systems, provides the minimum requirements for a protected premises fire alarm system. While compliance with minimum code requirements is important, seldom do those minimum requirements address the site-specific needs and conditions that exist at a particular facility. The requirements of the Code are intended to provide the minimum level of protection for all facilities regardless of their occupancy, operations, mission importance, or a myriad of other factors. For a particular application, in addition to the minimum requirements of the Code, the system designer should also consider the site-specific fire protection objectives of the building owner. Those objectives are often expressed as some level of life safety, property protection, and mission continuity that are usually above and beyond the minimum requirements of the Code.

This annex is a guide for system designers to determine the characteristics, features, and functions that may be needed for a fire alarm system in a particular application. The annex material provides a framework within which a system designer can develop a fire alarm system design that is integrated with the other fire protection features of the facility, such as the capabilities of the emergency responders, desired features of the fire alarm system, the size and use of the buildings, and other factors that should be considered in the design decision process.

C.1 Scope.

The requirements of the protected premises chapter (Chapter 23) provide for minimum levels of protection for fire alarm systems to protect life and property, regardless of the building characteristics, contents, or use. This System Performance and Design Guide provides additional considerations for users of the NFAC when planning, designing, and installing protected premises fire alarm systems for buildings that might be unusual in scale, mission, use, symbolism, or other critical or high-profile characteristics.

This guidance suggests potential system characteristics to enhanced system performance for protection of life, mission, and property in high-profile and other critical buildings, including signaling path integrity, redundancies, survivability, backup fire control stations, nonerasable logs, multiple information stations, and the benefits of networked and peer-to-peer configurations.

Chapter 23 covers the requirements for the installation and performance of protected premises alarm and signaling systems. Topics addressed include the following:

- Software and firmware control
- Required systems and nonrequired (voluntary) systems
- System performance and integrity, including circuit designations, pathway classification, and performance of initiating device circuits, signaling line circuits, and notification appliance circuits

- System requirements, such as actuation time, presignal feature, positive alarm sequence, interconnected fire alarm control units (FACUs), combination systems, and system inputs and outputs
- Reference to Chapter 24 for in-building fire emergency voice/alarm communications
- Requirements for fire alarm systems using tone notification, suppression system activation, off-premises signals transmission, guard's tour supervisory service, suppressed (exception reporting) signal systems, protected premises emergency control functions, and low-power radio (wireless) systems

C.2 Building Scale.

The size of a building to be protected influences fire alarm system operating characteristics, control functions, circuit integrity, annunciation, and other factors for protection of life, property, or the mission of the building.

C.2.1 Fire Service Response Location(s).

C.2.1.1 Location(s). Determine the fire service response location(s) by inquiry to the responding fire department (and building operating personnel, if appropriate).

C.2.1.2 Quantity. The fire service might desire more than one response location. Building operators might desire redundancies for security or operations under emergency conditions.

C.2.1.3 Functions. The primary response location is the normally expected location of the fire command center (FCC). In general, the fire command center provides information and control functions for the entire building. One or more redundant or abbreviated fire command centers might be desired for security or operations under emergency conditions.

See the definition of the term *fire command center* in 3.3.112. Also see the commentary following 3.3.112.

C.2.1.3.1 Information. Nonprimary response locations might be intended to provide annunciation equipment to provide information for the entire building, or for a portion of the building associated with the response location.

Nonprimary response locations might contain a remote annunciator that mimics the front panel display of the FACU. Subsection 10.18.3 identifies requirements for the annunciator location and access for responding personnel. Subsection 10.18.4 identifies requirements for what information is required to be displayed on the annunciator.

C.2.1.3.2 Control. Nonprimary response locations might be intended to provide a partial or complete fire command center to provide control functions for the entire building, or for a portion of the building associated with the response location.

Nonprimary response locations might contain a remote annunciator that provides certain control functions for responding personnel that mimic the controls on the front panel display of the FACU. Exhibit C.1 depicts a typical FACU and a remote annunciator with limited control functions. Note the building layout in the frame above the annunciator. It provides a visual representation of the building and translates the simple Zone 1, Zone 2 designations of the annunciator to specific building locations. This helps emergency responders to locate the alarm location quickly.

EXHIBIT C.1

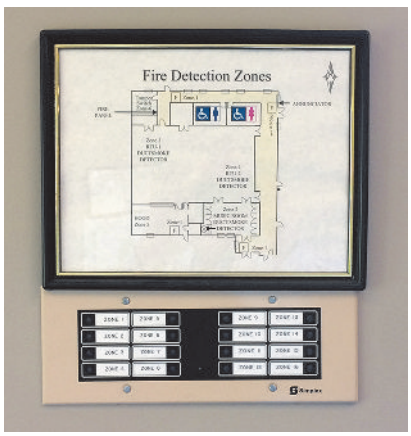

FACU (left) and Remote Annunciator with Some Control Functions (right). (Source: Johnson Controls, Westminster, MA)

C.2.2 System Operational Characteristics.

C.2.2.1 On-Premises Response. Determine an emergency response plan considering the requirements of NFAC, local codes and regulations, the availability and responsibility of building operating personnel, and the mobility of occupants.

An emergency response plan is a documented set of actions to address the planning for, management of, and response to natural, technological, and manmade disasters and other emergencies (see 3.3.97). An emergency response plan is particularly important when there is an emergency communications system in the building (see Chapter 24), or where signals from carbon monoxide (CO) detectors and CO detection systems are transmitted to a fire alarm system for processing of signals and occupant response (see 23.8.4.9).

C.2.2.1.1 Investigation. Building security or operating personnel should investigate every alarm signal, and the emergency response plan might include investigation of initial alarm signals prior to activating a general alarm or the evacuation or relocation of occupants.

Investigation of alarm signals is particularly important where systems employ cross-zoning, the operation of two automatic detectors to initiate the alarm response (see 23.8.5.4.3); the alarm verification

feature for smoke detectors (see 23.8.5.4); the presignal feature (see 23.8.1.1); and positive alarm sequence (see 23.8.1.2). An investigation in such cases is important because delays in initiating occupant evacuation procedures and off-premises transmission of signals for response by emergency personnel can occur.

C.2.2.1.2 Communication. Determine appropriate methods to provide alarm information, and instructions when required, to building security and operating personnel, supervisory and management personnel, and building occupants. Consider the need for predetermined messages, single- or multiple-channel communications systems, and coordination of communications system coverage and zoning with building subdivisions, including smoke compartments and automatic suppression system coverage and zoning. Consider the need for multiple languages in emergency communications.

C.2.2.1.3 Evacuation/Relocation. Determine the extent to which the emergency egress plan is based on total evacuation, relocation and partial evacuation, areas of rescue assistance and/or defending in place.

C.2.2.1.4 Survivability. Consider means to harden the fire notification circuits/paths to attack by fire for a period of time necessary to notify building operating personnel and occupants of a fire emergency and/or provide instructions if appropriate.

See Section 12.4 on pathway survivability levels and the requirements for pathway survivability in Section 23.10, 24.3.14.4, and 24.3.14.7 through 24.3.14.12.

C.2.2.1.5 Control. Fire alarm system control units can be arranged to actuate other building systems and to condition passive fire barriers to enhance fire safety in the building.

C.2.2.1.6 Building Systems. Consider activation or release of building systems and elements including, but not limited to, closing fire/smoke doors and dampers, recall of elevators, unlocking stairway doors, activating smoke control systems and or shut-down fans to prevent recirculation of smoke.

Fan control (operation or shutdown), smoke damper operation, elevator recall, elevator power shutdown, door holder release, shutter release, door unlocking, and activation of exit marking devices are examples of emergency control functions.

C.2.2.1.7 Fire Scene Operations. Compartmentation, water supply, fire fighter access, and communication links are important for manual fire-fighting operations. Fire alarm system monitoring, reporting, display, and control functions that enhance the maintenance and operation of these elements that enhance fire scene operations should be considered in the design, installation, and maintenance of protected premises fire alarm systems. An example would be a flashing visual notification appliance over the fire department connection.

C.2.2.2 External Response.

C.2.2.2.1 Resources Available. Determine the availability and responsibility of fire service resources. An example of the use of this information might be determining how to stage evacuation.

C.2.2.2.2 Time Required. Consider the time required for fire service response to the building. Consider travel time at various times of day and seasons of year.

C.2.2.2.3 Notification. Determine one or more acceptable means of automatic and manual notification of the fire service to initiate response to the building. Consider the extent of information that might be transmitted to the responding fire service to enhance response to the building and to provide incident information prior to its arrival.

C.2.2.2.4 Evacuation/Relocation. Consider system operational characteristics that might enhance coordination of control and direction to building operating personnel and occupants. Consider means of control and shift in control of evacuation or relocation direction from building operating personnel to fire service command.

C.2.2.2.5 Knowledge of Premises. Harmonize system operating characteristics to pre-incident planning with fire service and building operating and security personnel.

C.2.2.2.6 Communications and Control. Provide for fire-fighter communications through dedicated two-way fire-fighter communication systems, or consider a means to provide enhanced operation of fire service radio communications in the protected premises.

C.3 Premises Mission/Use/Property Protection.

The loss of use or mission of a facility to the effects of accidental fire can have a very significant impact on the community or organization served by the facility. In such a case, it is appropriate to enhance functional characteristics of the protected premises system. Considerations include the following:

(1) Criticality/Mission Continuity
   (a) Community — Loss of operations of the facility might affect the community beyond the facility. Consider the sensitivity of fire detection and the effectiveness of alarm processing, emergency response, and fire suppression to minimize effects on the community served due to facility impairment by fire.
   (b) Operations
      i. On-premises — Fire might result in business interruption or reduced effectiveness.
      ii. Elsewhere — Services provided by the facility to remote locations might cease or be reduced.

(2) Life Safety
   (a) Evacuation/Relocation — Size, distribution, and mobility of the occupant population should be considered with knowledge of facility emergency planning and availability of emergency response resources to determine the extent to which people movement might be managed during a fire incident.
   (b) Defend-In-Place — A protected premises system might be used to actuate facility fire safety elements necessary to defend occupants in place or to enhance rescue assistance.

(3) Property
   (a) Value — Cost, availability, and time required to reestablish facility contents should be considered when determining the sensitivity of fire detection and the effectiveness of alarm processing, emergency response, and fire suppression.
   (b) Replacement — Availability and time required to replace damaged facility contents should be considered when determining the sensitivity of fire detection and the effectiveness of alarm processing emergency response and fire suppression.
   (c) Redundancy — Duplication of facility contents in separate locations might reduce the need for sensitivity of fire detection or other property protection system capabilities.

C.4 Protected Premises Signaling System Features.

C.4.1 Event Logs. Computer processor–based systems are capable of assembling logs of system events by date and time, including alarm history. Such logs are an important resource in assessing system performance or malfunctions and in understanding or reconstructing a fire event after the fact. It is imperative that such logs are preserved and protected against deletion until it is affirmed that no further need for a log exists. Caution is recommended to secure system history logs when system software changes are made.

C.4.2 Network Configuration. Systems that use digital means to transfer signal information might provide benefits in economy of installation and distribution of information to multiple locations to enable rigorous alarm processing and response. Transmission of digital alarm information to remote locations might assist responding personnel by providing incident information prior to arrival at the location of the fire.

C.4.3 Peer to Peer Data Communication. Systems that duplicate the operating and history data bases in multiple network control units provide redundant monitoring and control points on a system that can enhance the reliability of the system and the operation of the system during emergency or degraded conditions.

Speech Intelligibility

ANNEX

D

This annex is not a part of the requirements of this NFPA document but is included for informational purposes only.

Intelligibility is a measurable aspect of electronic voice transmission systems that indicates the degree to which human listeners will be able to understand voice messages transmitted through those systems. In addition to quantitative assessments, intelligibility can be assessed qualitatively. System design for speech intelligibility and the testing or verification of speech intelligibility varies greatly from conventional audible tone signaling.

Since the concept of speech intelligibility was first incorporated into *NFPA 72®*, *National Fire Alarm Code®*, in 1996, the need for simple, reproducible test methods has continued to be the focus of discussion. Audio instrumentation manufacturers developed portable test meters that use well-established speech intelligibility modeling and measurement methods. Still, detailed practical test requirements and protocols were lacking in the Code. To address this void, the Fire Protection Research Foundation (FPRF) published a research project in October 2008 that provided the applicable *NFPA 72* technical committees with detailed material concerning speech intelligibility. This FPRF report was used as the basis for Annex D, which was added in the 2010 edition. The full report is available on the FPRF's website at www.nfpa.org/foundation.

Additional material concerning speech intelligibility is in the commentary for Chapter 18 and the article "Voice Intelligibility for Emergency Voice/Alarm Communications Systems" at the end of this annex.

Users of Annex D should refer back to the text of NFPA 72 to familiarize themselves with the specific requirements for the planning, design, installation, and testing of voice communication systems.

D.1 Introduction.

D.1.1 This annex is intended to provide guidance on the planning, design, installation, and testing of voice communication systems. The majority of this annex contains recommendations for testing of the intelligibility of voice systems.

D.1.2 As with most systems, proper system performance is related to good planning, design, installation, and maintenance. Similarly, test results are a valuable feedback mechanism for persons planning, designing, and installing systems.

System Design Tip

As with other types of testing, the degree to which a test can aid subsequent troubleshooting depends on the nature of the test and the type of instruments used, if any. While the Code permits a simple "listen" test to evaluate the qualities of intelligibility, that test will not help in troubleshooting complex intelligibility issues. Instruments that provide a measured score for speech intelligibility might be more helpful if they provide access to the underlying measurement data. Armed with that data, a knowledgeable technician or engineer could see specific factors affecting the score and propose corrections to increase the level of intelligibility. See the commentary after D.2.5.1.

D.1.3 This annex describes when, where, and how to test for speech intelligibility. It is also not the intent of this test protocol to describe how to interpret results or how to correct systems or environments that contribute to poor speech intelligibility.

D.1.4 For occupancies that do not yet exist, the designer should have an understanding of the acoustic characteristics of the architectural design, as well as the acoustic performance properties of available loudspeakers. Architecturally, this includes the physical size and shape of the space, as well as the acoustic properties of the walls, floors, ceilings, and interior furnishings. A proper design analysis can sometimes reveal that an intelligible system is not achievable unless some features of the architectural design are changed. The designer should be prepared to defend such conclusions and, if necessary, refuse to certify the installation of such a system. While "hand calculations" and experience work well for simpler installations, more complex designs are frequently better and more cost-effectively analyzed using one of a number of readily available computer-based design programs.

System Design Tip

Planning and design needs to incorporate the designation of acoustically distinguishable spaces (ADSs) as required by 18.4.11 of the Code. See also D.2.3.1.

D.1.5 The designer and the authority having jurisdiction should both be aware that the acoustic performance parameters of the chosen loudspeakers, as well as their placement in the structure, play a major role in determining how many appliances are necessary for adequate intelligibility. The numerical count of appliances for a given design and protected space cannot, by itself, be used to determine the adequacy of the design. Sometimes, the acoustic problems of certain placement constraints can be satisfactorily overcome through the careful selection of loudspeakers with the requisite performance characteristics, rather than by increasing their number.

D.2 Fundamentals of Test Protocol.

D.2.1 Measurement Method.

D.2.1.1 STI/STIPA.

D.2.1.1.1 Where the method for measuring speech intelligibility is the Speech Transmission Index (STI), this test protocol should be followed.

D.2.1.1.2 There are several methods that measure the STI. One method common to the emergency communications system industry uses a test signal referred to as STIPA — STI-Public Address.

D.2.1.2 Other Methods. Where the method for measuring speech intelligibility is the Phonetically Balanced Word test (PB), Modified Rhyme Test (MRT), or Speech Intelligibility Index (SII) method, the same methods for determining measurement locations should be used.

D.2.2 References.

D.2.2.1 IEC 60268-16, *Sound system equipment — Part 16: Objective rating of speech intelligibility by speech transmission index*, International Electrotechnical Commission, Geneva, Switz., 22 May 2003.

D.2.2.2 ISO 7240-19, *Fire Detection and Alarm Systems — Part 19: Design, Installation, Commissioning and Service of Sound Systems for Emergency Purposes*, International Organization for Standardization, Geneva, Switz., 1st edition, 15 Aug 2007.

D.2.2.3 NEMA Standards Publication SB 50-2008, *Emergency Communications Audio Intelligibility Applications Guide*, National Electrical Manufacturers Association, Rosslyn VA, 2008.

D.2.3 Terminology.

D.2.3.1 Acoustically Distinguishable Space (ADS).

D.2.3.1.1 An acoustically distinguishable space (ADS) can be an emergency communication system notification zone, or subdivision thereof, that can be an enclosed or otherwise physically defined space, or that can be distinguished from other spaces because of different acoustical, environmental, or use characteristics such as reverberation time and ambient sound pressure level. The ADS might have acoustical design features that are conducive for voice intelligibility, or it might be a space where voice intelligibility could be difficult or impossible to achieve.

D.2.3.1.2 All parts of a building or area intended to have occupant notification are subdivided into ADSs as defined. Some ADSs might be designated to have voice communications capability and require that those communications be intelligible. Other spaces might not require voice intelligibility or might not be capable of reliable voice intelligibility. Each is still referred to as an ADS.

D.2.3.1.3 In smaller areas, such as those under 400 ft^2 (40 m^2), walls alone will define the ADS. In larger areas, other factors might have to be considered. In spaces that might be subdivided by temporary or movable partitions, such as ballrooms and meeting rooms, each individual configuration should be considered a separate ADS. Physical characteristics such as a change in ceiling height of more than 20 percent or change in acoustical finish, such as carpet in one area and tile in another, would require those areas to be treated as separate ADSs. In larger areas there might be noise sources that require a section to be treated as a separate ADS. Any significant change in ambient sound pressure level or frequency might necessitate an area be considered a separate ADS.

D.2.3.1.4 In areas of 85 dBA or greater ambient sound pressure level, meeting the pass/fail criteria for intelligibility might not be possible and other means of communication might be necessary. So, for example, the space immediately surrounding a printing press or other high noise machine might be designated as a separate ADS and the design might call for some form of effective notification but not necessarily require the ability to have intelligible voice communication. The aisles or operator's control stations might be separate ADSs where intelligible voice communication might be desired.

D.2.3.1.5 Significant differences in furnishings, for example, an area with tables, desks, or low dividers adjacent to an area with high shelving, would require separate consideration. The entire desk area could be a single acoustic zone whereas each area between shelving could be a unique zone. Essentially, any noteworthy change in the acoustical environment within an area will mandate consideration of that portion of the area to be treated as an acoustic zone. Hallways and stairwells will typically be considered as individual acoustic zones.

D.2.3.1.6 Spaces confined by walls with carpeting and acoustical ceilings can be deemed to be one ADS. An ADS should be an area of consistent size and material. A change of materials from carpet to hard tile, the existence of sound sources such as decorative waterfalls, large expanses of glass, and changes in ceiling height are all factors that might separate one ADS from another.

D.2.3.1.7 Each ADS might require different components and design features to achieve intelligible voice communication. For example, two ADSs with similar acoustical treatments and noise levels might have different ceiling heights. The ADS with the lower ceiling height might require more ceiling-mounted loudspeakers to ensure that all listeners are in a direct sound field. See Figure D.2.3.1.7. Other ADSs might benefit from the use of alternate loudspeaker technologies such as line arrays to achieve intelligibility.

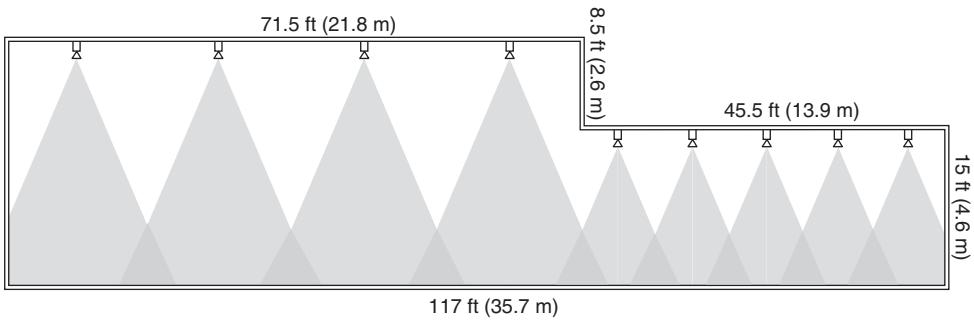

FIGURE D.2.3.1.7 *Illustration Demonstrating Effect of Ceiling Height. (Source: R. P. Schifiliti Associates, Inc.)*

D.2.3.1.8 An ADS that differs from another because of the frequency and level of ambient sound pressure level might require the use of loudspeakers and system components that have a wider frequency bandwidth than conventional emergency communications equipment. However, designers should not use higher bandwidth loudspeakers in all locations unless needed to overcome certain acoustic and ambient conditions. This is because the higher bandwidth appliance will require more energy to perform properly. This increases amplifier and wire size and power supply requirements.

D.2.3.1.9 In some spaces it might be impractical to achieve intelligibility, and in such a case alternatives to voice evacuation might be required within such areas.

D.2.3.1.10 There might be some areas of a facility where there are several spaces of the same approximate size and with the same acoustic properties. For example, there might be an office space with multiple individual offices, each with one loudspeaker. If one or two are satisfactorily tested, there is no need to test all of them for speech intelligibility.

D.2.3.2 Audibility Test. Measurement of the sound pressure level of a tone signal in accordance with the requirements of *NFPA 72*.

D.2.3.3 Intelligibility Test. A test method used to predict how well speech is understood by a listener.

A speech intelligibility test is a measure of the effectiveness of speech. The measurement is usually expressed as a percentage of a message that is understood correctly. Speech intelligibility does not imply speech quality — a message that lacks quality may still be intelligible. For example, a synthesized voice message may be completely understood by the listener, but it may be judged to be harsh, unnatural, and of low quality.

D.2.3.4 Occupied Ambient Sound Pressure Level. The period of time when the building involved in the test is occupied and is reasonably close to having maximum background noise. For example, this might involve the operation of HVAC equipment, an industrial process, or a maximum number of occupants such as might occur in a place of public assembly.

D.2.3.5 STI or STIPA Test Signal.

D.2.3.5.1 A special audio signal that is played over the emergency communications system being tested.

D.2.3.5.2 Instruments that measure STI using a STIPA signal use a special signal that consists of signals in seven octave bands. The sound in each octave band is modulated using two (separate) modulation frequencies. The STI and STIPA have been standardized in IEC 60268.

However, at the present time, the implementation of the measurement software and correlations with the test signal can differ between instrument manufacturers. Therefore, until there is further standardization, only the test signal recommended by the instrument manufacturer should be used with their instrument. Although the STIPA test signals can sound similar, there might be speed or other differences that affect results if one manufacturer's test signal is used with another manufacturer's instrument.

Exhibit D.1 is a matrix showing the Speech Transmission Index (STI) test frequency bands and modulations. STI for Public Address (STIPA) is a subset of STI using a reduced matrix for quicker measurements and processing. Research has shown that this selected subset of the STI matrix, shown in Exhibit D.2, has over 98 percent correlation to the full STI.

Sentences convey information. A single spoken word — "Fire!" —conveys to a listener that there is a fire. In sentences with multiple words, the individual words have meaning, but without the other words, they have no context.

Sentences and words are the subject of message construction. While words and sentences are important, it is the letters — and the sounds that represent those letters — and letter combinations that are important to good speech intelligibility. It is not necessary to hear or understand all of the words of most sentences to understand the meaning of the sentence. For example, research shows that an 80-word comprehension can result in about 95 percent sentence comprehension [Jacob 2001].

To understand spoken words, it is necessary to understand the individual sounds that make up that word. A phoneme is the smallest segment of sound employed in speech: "ay" for the letter "a" and "kah" for the letter "k," for example. Research shows that the phonemes most important to word comprehension are those that make up consonants. However, most speech energy is in the vowels and is at lower frequencies — below 1000 Hz. The consonants that are most needed for speech intelligibility are produced with less energy and lie at the higher frequencies. In 1917, a researcher noted that, "It is possible to identify most words in a given context without taking note of the vowels ... the consonants are the determining factors in ... articulation" [Crandall 1917]. One of the well-established subject-based test methods for quantifying word comprehension is called "Articulation Loss of Consonants."

For emergency messaging, telling occupants that there is a "shooter with a gun on floor seven" is quite different from saying there is "shooter with a nun on floor eleven." The letters *P* and *T* are the most often misunderstood sounds, yet they make up more than 10 percent of all phonemes in speech. *F* and *S* and *M* and *N* are also commonly transposed sounds. More than half of all phonemes are consonants [Rodman 2006].

The STI and STIPA test methods produce almost all phonemes of human speech. The instrument listens to the sounds and produces a score based on how much the sounds have been changed or distorted from what should have been received. The STI and STIPA methods weight the results for those phonemes that are most important to intelligible speech — those that produce consonants. The STI methodology and matrix were developed out of the need for accurate delivery of military communications. STI was created as an accurate and repeatable test method for evaluating communications systems and their environments.

D.2.3.6 Talkbox. An instrument usually consisting of a high quality audio loudspeaker and a CD player or other method used to play an STI or STIPA test signal.

D.2.3.7 Unoccupied Ambient Sound Pressure Level. The period of time when the primary occupants of the facility are not present, or when ambient sound pressure level is not at its highest level.

D.2.4 Acceptability Criteria.

D.2.4.1 The intelligibility of an emergency communication system is considered acceptable if at least 90 percent of the measurement locations within each ADS have a measured STI of not less than 0.45 (0.65 CIS) and an average STI of not less than 0.50 STI (0.70 CIS).

EXHIBIT D.1

Speech Transmission Index Test Matrix. (Source: R. P. Schifiliti Associates, Inc., Reading, MA)

Modulation Frequency (Hz)	Octave Band Center, Hz						
	125	250	500	1k	2k	4k	8k
0.63	•	•	•	•	•	•	•
0.80	•	•	•	•	•	•	•
1.00	•	•	•	•	•	•	•
1.25	•	•	•	•	•	•	•
1.60	•	•	•	•	•	•	•
2.00	•	•	•	•	•	•	•
2.50	•	•	•	•	•	•	•
3.15	•	•	•	•	•	•	•
4.00	•	•	•	•	•	•	•
5.00	•	•	•	•	•	•	•
6.30	•	•	•	•	•	•	•
8.00	•	•	•	•	•	•	•
10.00	•	•	•	•	•	•	•
12.50	•	•	•	•	•	•	•

EXHIBIT D.2

Speech Transmission Index, Public Address Test Matrix. (Source: R. P. Schifiliti Associates, Inc., Reading, MA)

Modulation Frequency (Hz)	Octave Band Center, Hz						
	125	250	500	1k	2k	4k	8k
0.63			•				
0.80						•	
1.00							
1.25					•		
1.60	•	•					
2.00				•			
2.50							•
3.15			•				
4.00						•	
5.00	•	•					
6.30					•		
8.00							
10.00				•			
12.50							•

See D.2.4.5 regarding the relationship between the STI and CIS scales.

D.2.4.2 Speech intelligibility is not a physical quantity like meters, feet, amperes, volts, or even decibels. It is a benchmark of the degree to which we understand spoken language, and as such is a complex phenomenon affected by many variables (Ref: Jacob, K. & Tyson, T., "Computer-Based Prediction of Speech Intelligibility for Mass Notification Systems," SUPDET 2008, Fire Protection Research Foundation, Mar 2008). There are two basic categories of intelligibility testing: (1) subject (human) based testing and (2) instrument based test methods. Test methods that use human subjects are only statistical predictions of how well speech might be understood at any other time for any other group of listeners. Several subject based test methods have been extensively researched, tested for reliability, and standardized. Examples include the Phonetically Balanced (PB) word scores (256 words or 1000 words) and Modified Rhyme Test (MRT). (Ref: ANSI S3.2-1989 revised 2009, "Method for Measuring the Intelligibility of Speech over Communication Systems."

Ref: ISO/TR 4870, "Acoustics — The Construction and Calibration of Speech Intelligibility Tests").

FAQ How is speech intelligibility measured or predicted?

As an example, assume a communications system is used to say a word in a sentence. A carrier sentence is used so that the acoustic environment is filled with sounds and reverberation just as when a real message would be delivered. The "talker" must not emphasize or pause as the test word is presented. A test subject, Ray, writes what word he thinks he heard. This is a subject-based test method.

"Ray, write down the word *shed* on your pad."

If Ray writes the word correctly, the intelligibility score is 100 percent. However, that means that only the one test scored 100 percent. It does not predict whether future tests with Ray reliably will be 100 percent. For this reason, the test is repeated multiple times and uses many words that include almost all the phonemes used in speech. Eventually, enough tests will produce a statistic that predicts what percentage of time Ray will understand words spoken on the test system in the test environment.

However, this does not indicate whether the general population will have a similar listening comprehension. If a second person, perhaps the authority having jurisdiction, were to listen and give an opinion, it still does not help predict how the general population will respond. A group of people should listen and then the group should be scored. The more diverse the group, the greater the cross section of ears and brains to average out the results.

Now, the measurement statistically predicts how the public will grade the system's performance in that particular acoustic environment. This is also a subject-based test, but the results are not subjective because of the larger statistical group. The results are objective — that is, the results will be the same, or at least statistically close, if the same system, in the same space, was tested with many different groups.

D.2.4.3 Subject based test methods can gauge how much of the spoken information is correctly understood by a person or group of persons for that particular test. When properly done, that resulting value is a prediction of how much of the spoken word will be correctly understood by others at some other time. Therefore, the results of speech intelligibility testing are usually described as predictions, not measurements. However, most users of the instruments refer to the results as measurements, not as predictions. Since the use of portable instruments is the more common method in the alarm and emergency communications industries, in this document the results will be referred to as measurements to avoid confusion. However, in scientific and general acoustic literature, readers can see the measured values correctly referred to as predictions.

D.2.4.4 Several instrument based methods for predicting speech intelligibility have been extensively researched and tested for accuracy and repeatability, and the methods have been standardized, most notably the Speech Intelligibility Index (SII) (formerly the Articulation Index, AI), Speech Transmission Index (STI), and Speech Transmission Index for Public Address (STIPA) (Ref: IEC 60268-16, "Sound system equipment — Part 16: Objective rating of speech intelligibility by speech transmission index", 2003. Ref: ANSI/ASA S3.5, "American National Standard Methods for Calculation of the Speech Intelligibility Index", 1997). Accuracy is how close the meter corresponds to actual human test results. Thus, even though an instrument is used, the results are subjective in that they correlate with how humans perceive the quality of speech.

Closer Look

How an Intelligibility Instrument Predicts Speech Intelligibility

An intelligibility instrument correlates acoustic measurements with subject-based tests to predict speech intelligibility. For example, assume that a subject-based test is conducted in an exhibition hall at a particular location. The reverberation time — the time it takes an impulse sound to decay 60 dB — is measured. Repeating that test many times in different locations and conditions in the exhibition hall gives a large data set. Then a statistical regression is performed, which determines that there is a correlation between the subject-based test results and reverberation time.

Similarly, audibility can be correlated to intelligibility. Not surprisingly, if the system is not loud enough, it cannot be understood, as there is a direct correlation between audibility and intelligibility. A test on the effects of system (electrical signal) distortion would also reveal a correlation to subject-based intelligibility tests. Instrument-based test methods have been developed that account for different combinations of these factors — reverberation, audibility, and distortion. Some have better correlations to subject-based testing than others. Instrument test methods such as the STI, which include all three factors, have the best correlation to subject-based test methods.

The standard, ISO 7240-16, *Fire detection and alarm systems — Part 16: Sound system control and indicating equipment* (2007), is similar to *NFPA 72*. (Note that ISO 7240-16 replaced IEC 60849, *Sound systems for emergency purposes.*) Some of the methods recognized in that standard are subject-based, while others use instrumentation. International Electrotechnical Commission (IEC) and International Standards Organization (ISO) standards incorporate objective methods for evaluating speech intelligibility. ISO 9921, *Ergonomics — Assessment of speech communication*, also references established methods. For each of the recognized methods, there already exists an internationally accepted standard for the test method/protocol. Commentary Table D.1 summarizes standardized instrument-based and subject-based test methods.

COMMENTARY TABLE D.1 *Summary of Intelligibility Test Methods*

Method	*Standard Referenced*	*Comments*
STI — Speech Transmission Index	IEC 60268-16, *Sound system equipment — Part 16: Objective rating of speech intelligibility by speech transmission index*	An objective method. Requires hardware and software for measurement and solution.
RASTI — Rapid or Room Acoustics Speech Transmission Index	IEC 60268-16, *Sound system equipment — Part 16: Objective rating of speech intelligibility by speech transmission index*	An objective method. A reduced STI method. Available in a handheld format. Effectively replaced by STIPA. Not included in Common Intelligibility Scale (CIS) graph [Exhibit D.3].
PB — Phonetically Balanced Word Scores	ISO/TR 4870, *Acoustics — The construction and calibration of speech intelligibility tests*	A subject-based method. Has one PB example with a 50-word list. ANSI S3.2, *Method for Measuring the Intelligibility of Speech Over Communication Systems*, is a better reference for evaluations using the English language.

COMMENTARY TABLE D.1 *Continued*

Method	*Standard Referenced*	*Comments*
MRT — Modified Rhyme Test	No reference given	A subject-based method. Has the same limits as given in ISO/TR 4870. ANSI S3.2, *Method for Measuring the Intelligibility of Speech Over Communication Systems,* is a good reference.
AI — Articulation Index	ANSI S3.5-1969, *Methods for the Calculation of the Articulation Index* ANSI S3.5-1997, *Methods for the Calculation of the Speech Intelligibility Index (SII)*	An objective method. The 1969 version of ANSI S3.5 is referenced and has since been updated to the 1997 edition. Requires hardware and software for measurement and solution.
$\%AL_{CONS}$ — Articulation Loss of Consonants	Peutz, V. M. A., "Articulation Loss of Consonants as a Criterion for Speech Transmission in a Room," *Journal of the Audio Engineering Society,* 19, 11	A subject-based method.

D.2.4.5 Each of the established methods for measuring speech intelligibility has its own scale. The Common Intelligibility Scale (CIS) was developed in 1995 to show the relationship between the different methods and to permit codes and standards to require a certain level of performance while permitting any of the accepted measurement methods to be employed (Ref: Barnett, P.W. and Knight, A.D., "The Common Intelligibility Scale," Proceedings of the Institute of Acoustics, Vol. 17, Part 7, 1995). The Speech Transmission Index (STI) is widely used and has been implemented in portable equipment using a modified method called STIPA (STI Public Address). For this reason, the performance metrics cited in this document use units of STI with units of CIS in parentheses. The relationship between the two is: CIS = 1+log (STI). Relationships between other methods can be found in the literature (Ref: IEC 60849, Annex B, Sound Systems for Emergency Purposes, Feb 1998).

IEC 60849 includes a chart that equates the scales for each of the different test methods to a common scale called the Common Intelligibility Scale (CIS). See Exhibit D.3.

D.2.4.6 If an ADS is small enough to only require one measurement location (see D.3.7 for the recommendation for measurement point spacing), the result should be 0.50 STI (0.70 CIS) or more for the ADS to pass the requirement for speech intelligibility. This is based on the requirement for an average of 0.50 STI (0.70 CIS) or more in that ADS. Therefore, a single measurement of 0.45 STI (0.65 CIS) would not be considered acceptable, because that one measurement would be below the minimum required average of 0.50 STI (0.70 CIS) in that ADS.

D.2.4.7 If the value at that one measurement location were less than 0.50 STI (0.70 CIS), additional measurements could be taken at that same single measurement location. As with simple sound pressure level measurements, intelligibility measurements at any point will vary. If the average of all the measurements at that location were 0.50 STI (0.70 CIS) or more, the ADS would pass the requirement for speech intelligibility.

Δ **D.2.4.8** Some ADSs might require multiple measurement points due to their larger size. (See D.3.7 for the recommendation for measurement point spacing.) However, even in a small

EXHIBIT D.3

▼ Phonetically balanced word scores (256 words)
▲ Short sentences
○ Percentage articulation of consonants [100–(% Alcons)]
■ Phonetically balanced word scores (1000 words)
□ 1000 syllables
× Articulation index (AI)
● Speech transmission index (STI x 100)

$$CIS = 1 + \log_{10}(STI)$$

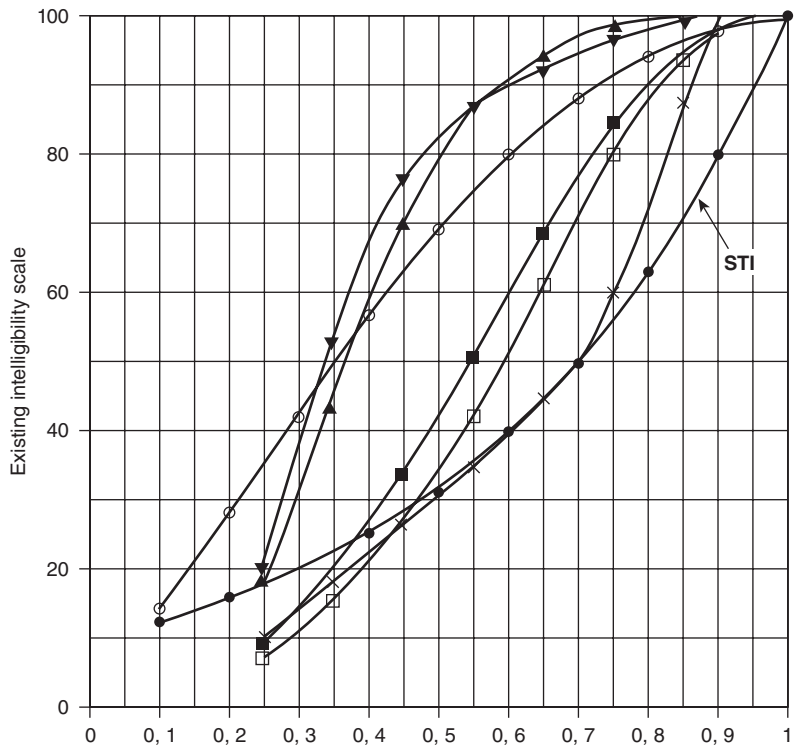

Common Intelligibility Scale. [Reproduced with permission from proceedings Volume 17 Part 7 (1995) of the Institute of Acoustics UK]

ADS where one measurement point would be permitted, a designer might intend that multiple measurements be made because of conditions that might result in specific points having intelligibility scores below the minimum. Where an ADS has multiple measurement locations, the requirement is that at least 90 percent of the measurement locations have values not less than 0.45 STI (0.65 CIS) and that all measurement points average to 0.50 STI (0.70 CIS) or greater.

D.2.4.9 The use of an average intelligibility score as a part of the requirement permits a wider range of measured values within an ADS than would a simple minimum requirement. A range of permitted values is not appropriate since there is no need for an upper limit for intelligibility — prefect intelligibility is certainly acceptable.

△ **D.2.4.10** The requirement that only 90 percent of the measured points in the ADS meet the minimum and that the average for the entire ADS be 0.50 STI (0.70 CIS) or greater recognizes that in any space, with any system and any set of acoustic conditions, there can be points where the intelligibility score might be below the minimum. See also the discussion in D.2.3.1 on the definition of an ADS and how some ADSs might be designated to not require speech intelligibility at all. For example, in a room that is otherwise similar from an acoustics standpoint, the space around a loud machine might be one ADS while the rest of the room is a separate ADS. The ADS surrounding the machine might be designed to have some form of occupant notification, but not to have intelligible voice communications. This type of ADS designation permits the remainder of the room to be scored without being penalized by the fact that intelligible communication near some loud sound sources might not be possible.

Supplementary visual notification appliances, such as rotating lights, could be used to signal the need to move to a different area, where voice instructions can be heard and understood. See Section 18.7.

D.2.4.11 The intelligibility performance requirement cited herein intentionally uses two decimal points. Portable instruments that use the STIPA method for measuring the Speech Transmission Index (STI) generally have a precision on the order of 0.02 to 0.03 (Ref: Sander J. van Wijngaarden and Jan A. Verhave, Past Present and Future of the Speech Transmission Index, Chapter 9, Measurement and Prediction of Speech Intelligibility in Traffic Tunnels Using the STI, p. 113, TNO Human Factors, The Netherlands, 2002). Other methods that measure STI can have a greater measurement precision. Other measurement methods, such as Modified Rhyme Test (MRT), Phonetically Balanced Word (PB) lists, and Speech Intelligibility Index (SII), also have levels of precision in the hundredths when properly conducted and scored. However, there might be slight variations in measured values between any two meters or between any two persons taking measurements with the same instrument, or between any two listener panels when using subject-based test methods. This is true for any measurement method or instrument, including simple scales for measuring length or mass.

D.2.4.12 Measurements should be made and recorded using two decimal places. Averages can be calculated to three decimal points and rounded. The calculated average value should be rounded to the nearest five-hundredths (0.05) to reflect possible measurement errors and the intent of the requirement (Ref: Mapp, P., "Systematic & Common Errors in Sound System STI and Intelligibility Measurements," Convention Paper 6271, Audio Engineering Society, 117th Convention, San Fran, CA, 28–31 Oct 2004. Ref: Peter Mapp, Past Present and Future of the Speech Transmission Index, Chapter 8, Practical Application of STI to Assessing Public Address and Emergency Sound Systems, TNO Human Factors, The Netherlands, 2002). For example, averages of 0.47–0.525 STI would all be rounded to report an average of 0.50 STI (0.70 CIS). The minimum value permitted for all but 10 percent of the measurement locations in an ADS should be 0.45 STI (0.65 CIS) or greater. For example, values of 0.44 STI are below the minimum; they are not rounded up to 0.45 STI.

D.2.5 Limitations of Test Method.

D.2.5.1 Equipment designed in accordance with UL 864 and fire alarm loudspeakers designed in accordance with UL 1480 are only tested for and only required to produce frequencies of 400 to 4000 Hz. Speech, however, includes a wider range of frequencies. Speech intelligibility measurements using STI and STIPA include octave band measurements that range from 125 Hz to 8000 Hz. STI results are most dependent on the 2000, 1000, 500, and 4000 Hz octave bands (in order of weighting) and to a lesser extent the 8000 and 250 Hz octave bands and to an even lesser extent, the 125 Hz band (again, in order of weighting).

System Design Tip

STI and STIPA measurements present a single score. However, to get that score, the instrument takes a measurement for each cell in the matrix shown in Exhibit D.1 or D.2. STI measures 98 sounds that make up almost all phonemes used in human speech; STIPA measures 12 sounds that make up the most important phonemes used in human speech. When evaluating a system with poor or marginal intelligibility scores, it is useful to look at the intermediate, individual measurements to ascertain what factors might be causing the low score.

D.2.5.2 While the lower and higher octave bands in STI calculations are weighted much less than the others, under certain acoustic conditions, systems that do not produce the highs and the lows can produce speech intelligibility that is less than desired. This does not imply that all systems should use equipment capable of greater bandwidth sound reproduction. While the larger frequency response will probably sound better and be more intelligible to a listener, it might not be necessary for the minimum desired performance. The use of equipment with

higher bandwidth will require an increase in power supplies, amplifiers, and wire sizes to drive the loudspeaker appliances.

D.2.5.3 Areas of high ambient sound pressure levels ("noise") might be incapable of meeting the acceptability criteria in D.2.4.

Δ **D.2.5.4** In areas where the ambient sound pressure level exceeds 90 dBA, satisfactory speech intelligibility is difficult to achieve with conventional communications equipment and design practice. A better system design might include alternate communications methods, such as signs and displays, or might involve providing occupant notification but not voice alarm communication at that location.

D.2.5.5 Impulse sounds made during measurements can impact measurement accuracy or cause instrument error.

D.2.5.6 Impulse sounds such as accidentally tapping the meter microphone, or a nearby door slamming can cause a measurement error. Some meters will display an error message. If an impulse sound occurs during the measurement, consider taking another measurement to check the results. This process is analogous to ignoring temporary sound sources, as permitted by *NFPA 72* when taking sound pressure level measurements.

D.2.5.7 Natural variation in ambient sound pressure level levels can affect the results.

D.2.6 General Requirements.

D.2.6.1 The qualified staff should be identified on the system design documents. Acceptable evidence of qualifications or certification should be provided when requested by the authority having jurisdiction. Qualified personnel should include, but not be limited to, one or more of the following:

(1) Personnel who are factory trained and certified for fire alarm system design of the specific type and brand of system addressed by this test protocol
(2) Personnel who are certified by a nationally recognized certification organization acceptable to the authority having jurisdiction
(3) Personnel who are registered, licensed, or certified by a state or local authority

D.2.6.2 All necessary precautions should be taken with the facility owner to work with appropriately qualified staff when handling or performing any function with the emergency communications system control unit.

D.2.6.3 Testing impairment and record keeping requirements of *NFPA 72*, Chapter 14 should apply.

D.2.6.4 Test measurements and other documentation should be maintained as required by the authority having jurisdiction.

D.2.6.5 Impairment management procedures of *NFPA 72*, Section 10.21 should be followed.

Δ **D.2.6.6 Test Participants.** The test participants should include representatives of the following: building owners, the organizations responsible for the fire alarm or emergency communications system design and installation, system equipment supplier and/or manufacturer, and the authority having jurisdiction.

D.3 Pre-Planning.

D.3.1 Facility Occupancy and Use.

D.3.1.1 Occupancy/Use Types. Prior to testing, the pre-planning effort should identify the occupancy or use type to better minimize disruption to the facility occupants during the test.

D.3.1.2 Normal Operational Time Periods. Prior to testing, pre-planning efforts should identify the operational time periods when the occupied ambient sound pressure level and the unoccupied ambient sound pressure level are most likely to occur.

D.3.1.3 Testing Before Building Furnishing Completion. It might be necessary to perform testing to permit partial use before the building is in its final acoustic configuration. The results of intelligibility testing at this stage can differ from the final performance of the system. It might be necessary to work with the authority having jurisdiction to develop a testing plan. For example, until acoustical treatments such as carpeting, ceiling tiles, and other furnishings are in place, the system can be partially tested to meet audibility requirements but not necessarily intelligibility requirements. Other test plans or mitigating procedures might be permitted.

D.3.1.4 Facility Construction and Condition. Construction in the facility to be tested should be completed for areas that will be subject to intelligibility testing. This specifically requires that the command center and all locations of system microphones to be tested should be completed. Any location of remote system microphones not tested during this time should be noted, and said locations should be fully tested with positive results within 90 days of area occupancy or as required by the authority having jurisdiction. Also, all building systems such as environmental conditioning systems should be completed and operational, as they both produce noise and provide acoustic noise travel paths. In addition, all floor treatments and any acoustical wall or ceiling treatments should be in place.

System Design Tip

Paragraphs D.3.1.3 and D.3.1.4 point out that testing before occupancy can dramatically alter the results — usually causing lower intelligibility scores. People can absorb reverberation, even though they might also contribute background noise. This presents a problem for obtaining final approval by the local authorities before occupancy. This challenge points to two important factors. First, during the planning and design stage, all stakeholders must agree on acceptability criteria and on test methods. Second, the intelligibility test should be considered a tool to find and correct minor design and installation problems. It will be too late and too costly to make corrections on a system that has major speech intelligibility problems.

D.3.1.5 System Under Test Status. The system under test should be completed for all areas where intelligibility testing will be done.

D.3.1.6 System Under Test Power. System under test should be on permanent primary power source as defined in *NFPA 72*.

D.3.1.7 System Under Test Secondary Power. Secondary power, where required and/or provided for the system under test, should be fully functional. If batteries are used for this purpose, batteries should be fully charged for a minimum of 48 hours prior to the commencement of any testing.

D.3.2 Emergency Communications Equipment.

D.3.2.1 As discussed in D.2.3.1, not all ADSs will require or be capable of intelligible voice communications. It is the designer's job to define areas that will have voice communication versus those that might have tone-only signaling, as well as which spaces will have visual notification appliances (strobes), textual signage, or other forms of notification and/or communication. This document intends that "notification" mean any form of notification, not just voice communication, whether audible, visual, or using some other human sense.

D.3.2.2 There might be applications where not all spaces will require intelligible voice signaling (Ref: NFPA 72, 2007, Section A.7.4.1.4). For example, in a residential occupancy such as an apartment, the authority having jurisdiction and the designer might agree to a system that

achieves the required audibility throughout but does not result in intelligible voice signaling in the bedrooms. The system would be sufficient to awaken and alert. However, intelligibility might not be achieved in the bedrooms with the doors closed and the sounder in the adjacent hallway or room. In some cases this can require that messages repeat a sufficient number of times to ensure that occupants can reach a location where the system is sufficiently intelligible to be understood. Systems that use tone signaling in some areas and voice signaling in other areas would not require voice intelligibility in those areas only covered by the tone.

D.3.2.3 Emergency Communications System Control Unit. The system under test for the emergency communications system should be located and identified prior to testing, and its operation features necessary for the testing clarified. Personnel who are authorized to access and service the control unit are necessary for the testing and should be included within the team performing the tests. If necessary, notification to locations beyond the facility that is being tested (e.g., fire department or a supervising station) should be notified of the tests, and if appropriate, their automatic notification feature disabled. Upon completion of the tests the emergency communications system should be returned to its normal operating condition.

D.3.2.4 Test Set-up. The function and operation of the emergency communication system control unit should be reviewed with personnel authorized to access and operate this equipment. Information should be acquired on the functioning of the voice notification portion of the system, and whether it has zone capabilities that will allow minimal disruption to building occupants by testing each zone individually. The test plan should also specify whether other functions of the system, such as elevator recall and air handler control, will be disabled during the testing of the emergency communications system.

D.3.2.5 System Under Test Calibration. The complete system under test audio path should be fully calibrated in accordance with manufacturer's published instructions. On systems with adjustable technology, if manufacturer's published instructions are not provided, the alternate calibration procedure offered below can be employed to calibrate the system under test.

D.3.2.5.1 Alternate Calibration Procedure.

D.3.2.5.1.1 This calibration is to be performed with the system under test on normal AC power, then checked with the system on secondary power (if so equipped).

D.3.2.5.1.2 The system under test amplifier output or the circuit being calibrated should have a minimum of a 1-watt load during the calibration process.

D.3.2.5.1.3 Perform pre-test occupant and remote monitoring station notification requirements specified in *NFPA 72*, Chapter 14.

D.3.2.5.1.4 Introduce a 1 kHz sine-wave tone (± 100 Hz) at 90 dBA-fast 4" (4 in.) to the system microphone on-axis, perpendicular to the face of the microphone.

D.3.2.5.1.5 Place the system under test into manual paging mode (microphone "live" and connected to amplifier circuitry with notification appliance circuits active).

D.3.2.5.1.6 Using a 4-digit accuracy RMS meter, set on AC scale, set the output of the System Under Test audio notification appliance circuits to between 24 and 26 Vrms for 25.2 volt systems or between 69 and 71 Vrms for 70.7 volt systems.

D.3.2.5.1.7 Once system under test manual paging mode has been calibrated, prerecorded tone (if so equipped) should then be tested by playing it through the system under test to ensure that there is no more than a 3 dBA difference between manual paging using the system microphone and the prerecorded message. The dBA measurement should be made using an integrating/averaging meter and averaged over approximately 10 seconds of voice announcement to compensate for voice amplitude modulation.

D.3.2.5.1.8 On a system under test with more than one emergency paging microphone and/or prerecorded message units, the primary units should be calibrated, then secondary units tested to ensure that they produce signals throughout the system under test at the same amplitude as the primary units.

D.3.3 Plans and Specifications.

D.3.3.1 The approved plans and specifications for the system should be used to plan and document the tests.

D.3.3.2 Testing is best accomplished using large scale plans showing all notification appliances.

D.3.3.3 The plans should show the different system notification zones.

D.3.3.4 The type and location of the notification appliances used in the emergency communication system should be identified prior to testing.

D.3.3.5 Notification appliance symbols should differentiate the type of appliance where more than one type is used.

D.3.3.6 Notification appliance symbols should include the design wattage for each loudspeaker appliance.

NFPA 170, *Standard for Fire Safety and Emergency Symbols,* and NECA 100, *NEIS Symbols for Electrical Construction Drawings,* define the formats of symbols to be used on fire alarm system plans.

D.3.3.7 The plans should show the ambient sound pressure levels used as a basis for the system design.

Chapter 7 and Chapter 18 contain specific requirements for documenting ambient design criteria and system performance criteria that must be used as the basis for the testing.

D.3.4 Calculating Percentage of Articulation Loss of Consonants ($\%AL_{CONS}$).

There are occasions in which a space may not be available to take test measurements in prior to the design being completed. One method of calculation for the Speech Intelligibly Index is by calculating percentage of articulation loss of consonants ($\%AL_{CONS}$). The formula is:

Δ

$$\%AL_{CONS} = 656D_2^2RT_{60}^2(N)/VQM \qquad \textbf{[D.3.4]}$$

where:

D_2 = distance from the loudspeaker to the farthest listener
RT_{60} = reverberation time (seconds)
N = power ratio of L_W causing L_D to the L_W of all devices except those causing L_D
V = volume of the room (ft³)
Q = directivity index (ratio)
M = D_C modifier (usually 1)

As point of reference, D_C is the critical distance.

N is further defined as:

L_W = sound power level (dB)
L_D = total direct energy
L_W = $10\log(W_a/10^{-12}W)$
W_a = acoustic watts
10^{-12} = specified reference
L_D = $L_W + 10\log(Q/4\pi r^2) + 10.5$

The conversion factor from $\%AL_{CONS}$ to STI: STI = $[-0.1845 \times \ln(\%AL_{CONS})] + 0.9482$

D.3.5 Assignment of Acoustically Distinguishable Spaces.

D.3.5.1 ADSs should be assigned prior to the test, and be subject to review by all test participants.

D.3.5.2 ADS assignments should be a part of the original design process. See the discussion in D.2.3.1.

D.3.5.3 The design drawings should be used to plan and show the limits of each ADS where there is more than one.

D.3.5.4 All areas that are intended to have audible occupant notification, whether by tone only or by voice are to be designated as one or more ADSs. See D.2.3.1.

D.3.5.5 The drawings or a table listing all ADSs should be used to indicate which ADSs will require intelligible voice communications and which will not. The same drawings or table could be used to list audibility requirements where tones are used and to list any forms of visual or other notification or communications methods being employed in the ADS.

D.3.5.6 ADS layouts that differ from the original, approved design documents should be approved by the authority having jurisdiction.

D.3.6 Spaces Not Requiring Testing.

D.3.6.1 Buildings and areas of buildings that are not acoustically challenging such as traditional office environments, hotel guest rooms, dwelling units, and spaces with carpeting and furnishings generally meet intelligibility levels if the audibility levels are consistent with the requirements of *NFPA 72*. Performing intelligibility testing might not be necessary in these areas. Areas of a typical building that can be acoustically challenging could include vehicle parking levels and large lobby areas with hard floors and wall surfaces, stairs, and other spaces with high reverberation. Intelligibility meeting the requirements in this document can be difficult to achieve throughout these spaces. Specialized sound system design procedures, principles, and equipment might be necessary to achieve speech intelligibility in high noise areas or areas with challenging acoustics. Alternatively, intelligibility could be provided near exits and within specific areas (elevator lobby of a parking level) where occupants can obtain clear instructions after being alerted. This is done, in part, by the proper planning and designation of ADSs.

D.3.6.2 Factors that influence the decision to measure or not measure speech intelligibility include those in D.3.6.2.1 through D.3.6.2.3.

△ **D.3.6.2.1** Possible reasons not to test speech intelligibility include the following:

(1) Distance from the listener to loudspeaker is less than 30 ft (9.1 m) in the room (assuming proper audibility and low reverberation)
(2) Ambient sound level is less than 50 dBA and the average SPL of the voice message is 10–15 dBA greater than the ambient sound level
(3) No appreciable hard surfaces (e.g., glass, marble, tile, metal)
(4) No appreciable high ceilings (i.e., ceiling height equals loudspeaker spacing at a ratio of 1:1 optimal or 1:2 max)

D.3.6.2.2 It might be acceptable to only spot test intelligibility. One possible reason for spot sample testing is where the space has been acoustically designed by individuals having skills sufficient to properly design a voice/alarm system for the occupancy to be protected (e.g., space has been designed using commercially available computer modeling software acceptable to the authority having jurisdiction).

△ **D.3.6.2.3** Possible reasons to test include the following:

(1) Appreciable hard surfaces (e.g., glass, marble, tile, metal)
(2) Appreciable high ceilings (e.g., atriums, multiple ceiling heights)

D.3.6.3 In situations where there are several ADSs that have the exact same physical and system configuration, it might be possible to test only a representative sample and then just check the others to confirm system and appliance operation — for example, hotel rooms with similar layouts or offices of similar size and furnishings where each has a loudspeaker appliance. In these cases there would be no expected difference in system intelligibility. The only possible problem would be one where an appliance was not operational or tapped at the incorrect wattage. These problems would be apparent by a basic "listening" test.

D.3.6.4 Not all ADSs will require speech intelligibility testing. Some areas might be designed for notification, but not for voice communication. Notification can be accomplished by tone-only signaling or by a pre-alert tone preceding a voice message. See D.3.5.5.

D.3.6.5 By definition, an ADS is relatively uniform in acoustic characteristics. However, speech intelligibility will vary at different points within an ADS depending primarily on distance to noise sources and distance to loudspeaker appliances. Generally, in smaller spaces up to about 40 ft × 40 ft (12.2 m × 12.2 m), one measurement location will be sufficient. The location should not be directly in front of a wall mounted loudspeaker or directly under a ceiling mounted loudspeaker. Neither should it be in the far corner right next to walls or windows. Generally, try to stay about 5 to 10 ft (1.5 to 3.0 m) away from vertical surfaces that reflect sound. In larger spaces, a grid of about 40 ft × 40 ft (12.2 m × 12.2 m) can be used as a starting guide, then adjusted for the locations of machines and other obstructions and for loudspeaker appliance locations. See D.2.4 for additional discussion on measuring points and the averaging of results in an ADS.

D.3.6.6 Of the ADSs that do require intelligible voice communications, some will require speech intelligibility testing and others might only require audibility testing.

D.3.6.7 Testing of intelligibility might not be required in buildings and areas of buildings that are not acoustically challenging and that meet the audibility requirements of NFPA 72. Spaces that are not considered to be acoustically challenging include traditional office environments, hotel guest rooms, spaces with carpeting and furnishings that reduce reverberation, and other, smaller spaces where a loudspeaker appliance is installed in the space.

D.3.7 Measurement Points Within ADS.

D.3.7.1 Measurements should be taken at an elevation of 5 ft (1.5 m) or at any other elevation deemed appropriate based on occupancy (e.g., elevated walkways, child-height, sitting height, work area height, etc.) or test instrument instructions.

D.3.7.2 The number and location of measurement points in each ADS should be planned and based on the area and volume of the space and the loudspeaker appliance location within the space. The location of noise sources, egress paths, and the locations of personnel in the space should also be considered.

D.3.7.3 Testing when the area is occupied and when the ambient sound level is at or near its expected maximum is preferred because it is easier. However, it does involve playing of a test signal through the emergency communications system for the duration of the test. When testing using the STIPA signal, the signal is a continuous noise signal. Other methods that measure STI use a swept tone that should be repeated for each measurement location. The alternate procedure is to test and save the STI measurement data during unoccupied times, measure and save the unoccupied sound level, and then take and save sound

level measurements during occupied times. The three data sets are combined by software to calculate the corrected STI for the area. Testing using this method requires three measurements at each measurement location, but does not subject occupants to constant test signals. The choice of testing occupied versus unoccupied for intelligibility is the same as for audibility testing of tone signaling systems and is based on convenience versus disruption of normal use of the space. However, unlike audibility testing, intelligibility testing is less likely to contribute to the Cry Wolf Syndrome because the test signal is not the same as the evacuation tone, which would be sounded throughout testing of a tone signaling system. [Ref: Schifiliti, Robert P., "Fire Alarm Testing Strategies Can Improve Occupant Response and Reduce the "Cry Wolf" Syndrome," NEMA Supplement in Fire Protection Engineering, Society of Fire Protection Engineers, Bethesda, MD 20814, Fall 2003.] and [Ref: Brezntiz, S., "Cry Wolf: The Psychology of False Alarms," Lawrence Erlbaum Associates, Hillsdale, NJ, February 1984.]

D.3.7.4 If multiple measurement points are required within an ADS, they should be separated by about 40 ft (12.2 m).

D.3.7.5 No more than one third of the measurement points within an ADS should be on the axis of a loudspeaker.

D.3.7.6 See D.2.4 for the requirements for averaging the results at different measurement points within an ADS.

D.3.7.7 Measurement points should be shown on plans or otherwise described in a way that permits future testing at the same locations.

D.3.8 Test Method — Occupied versus Unoccupied.

D.3.8.1 It is possible to conduct STI measurements when the area is occupied or when it is not occupied. In this document "occupied" versus "unoccupied" is intended to be consistent with the definitions in D.2.3 for occupied ambient sound pressure level and for unoccupied ambient sound pressure level.

D.3.8.2 The preferred procedure is to conduct the STI/STIPA test in the presence of the occupied ambient sound pressure level. See D.6.4.

D.3.8.3 Where the test method is measuring the STI using the STIPA test signal, the STIPA test signal can be played through the system and the STI can be measured and the data saved by the test instrument when the area is either not occupied or when the background ambient conditions are not the occupied ambient sound pressure level. It is also necessary to measure and save the unoccupied ambient sound level at each measurement location. Then, during occupied times, take and save ambient sound level measurements. The three data sets are combined by software to calculate the corrected STI for the area. See D.6.5.6.

Combining test measurements of an unoccupied period with measurements of occupied ambient conditions requires that the measurements be made in the same locations. The test plan must include a method for documenting measurement locations so that the data can be later combined to determine the final intelligibility score.

D.4 Test Equipment Calibration for Testing Using STIPA Test Signal.

D.4.1 General.

D.4.1.1 The calibration of the STI test instrument is done in accordance with this section using a talkbox or in accordance with manufacturer's published instructions.

D.4.1.2 The Intelligibility Test System consists of a talkbox and STIPA test meter (analyzer) all from one manufacturer. Units from other manufacturers should not be interchanged unless said units have been tested by a recognized testing laboratory for compatibility *(see D.2.3.5.2)*.

D.4.1.3 Prior to performing any intelligibility testing or intelligibility system calibration, verify that the test meter's microphone, talkbox, and analyzer are within calibration date as listed on the unit's calibration tag.

D.4.1.4 All audio test equipment, including ANSI Type 2 sound pressure level meters required by *NFPA 72* for audibility testing, require regular calibration to known, traceable standards. The portable meters used to measure STI using the STIPA test signal should meet or exceed ANSI Type 2 meter requirements. In addition, the STIPA test signal and the meter algorithm for measuring the received signal and calculating the modulation transfer function to arrive at the STI should be tested by a certifying laboratory for accuracy to the IEC standard for STI.

D.4.2 Calibration Procedure.

D.4.2.1 The following procedures should be performed at the commencement and conclusion of intelligibility testing. If the following procedure differs from that recommended by the manufacturer of the test equipment, follow their calibration test procedure.

△ **D.4.2.2** Perform calibration procedures in a quiet room (45 dBA or less) without any extraneous sounds or any talking, music, etc.

D.4.2.3 Start STIPA test tone as instructed by the manufacturer.

D.4.2.4 Apply power to the talkbox and then actuate the STIPA test signal.

D.4.2.5 Turn on the analyzer and set it to SPL A fast measurement mode.

D.4.2.6 Place the analyzer's microphone approximately 1 in., on axis, from the talkbox. Do not place the analyzer microphone against any hard surface — this can lead to induced noise and affect the calibration.

D.4.2.7 Adjust the talkbox volume so that the STI analyzer's reading is approximately 92 dBA.

D.4.2.8 Keeping the analyzer in approximately the same position, measure the STI. Note that some meters display STI measurements using the CIS scale while some can display results in either STI or CIS units. See D.2.4 for an explanation of the CIS scale.

D.4.2.9 The equipment is working properly if the reading is greater than 0.91 STI or 0.96 CIS. Up to three tests can be performed. If the system does not pass after three tests, it should be returned to the manufacturer for repair or recalibration.

D.5 Talkbox Set-up.

D.5.1 Input Test Signal.

D.5.1.1 The input test signal should be configured to produce the proper level by utilizing either the microphone input method or the direct input injection method.

D.5.1.2 Most emergency communications systems have microphones for manual voice communication and should be tested using the microphone test method. Systems that do not have microphones and that only play prerecorded voice announcements can be tested using the direct input injection method.

D.5.1.3 By putting the STI or STIPA test signal into the system via the system microphone, the ECS system is being tested from end to end. If an ECS system has the test signal

prerecorded in its hardware, playback of that test signal would not be testing the microphone and the part that feeds the microphone signal into the system.

If the test signal is stored on the system's message chip, the signal must be able to be identified as certified by the manufacturer of the test instrument to verify that it has not been altered.

D.5.1.4 Direct Input Injection Method for Test Signals.

D.5.1.4.1 With this method the STI or STIPA test signals are prerecorded in the emergency communications system hardware in the same way as the prerecorded voice messages and at the same input levels. Alternately, the test signal can input to the system via input jacks or terminals.

D.5.1.4.2 The input level of the test signal should be tested by the ECS listing agency as being the same as the prerecorded voice levels or should be calibrated using the ECS equipment manufacturer's published instructions.

D.5.1.4.3 For ECS systems that permit voice messages to be custom recorded, the equivalent sound level *(see A.18.4.4.1)* L_{eq} of the recorded voice over a period of 10 seconds or the length of the voice message should be measured and should be within 3 dB of the prerecorded STI or STIPA test signal to ensure that it is at the correct level.

D.5.1.4.4 Field measurements of the STI are made using the procedure in Section D.5.

D.5.1.5 Microphone Input Method for Test Signals.

D.5.1.5.1 With this method a recording of the STI or STIPA test signals are played into the system microphone using a talkbox.

D.5.1.5.2 The talkbox is set up and calibrated per D.5.2, and field measurements of the STI are made using the procedure in Section D.6.

D.5.2 Calibrating the Input Test Signal for Microphone Input Method.

D.5.2.1 Of the two methods for setting the test signal input to the system microphone, the method that sets the level to match that of a person speaking into the microphone is the one required by IEC 60268-16, *Sound system equipment — Part 16: Objective rating of speech intelligibility by speech transmission index,* the standard that defines STI and STIPA.

D.5.2.2 In theory, the two methods for setting up the talkbox should result in the talkbox being set at approximately the same sound level. The ECS should be designed and configured so that input to the microphone results in the same output level that any prerecorded announcements would produce.

D.5.2.3 General.

D.5.2.3.1 There are two methods for setting the level of the STI or STIPA test signal at the input microphone.

D.5.2.3.2 Method 1 sets the volume of the input test signal so that the dBA output in the area under test is the same as that for a prerecorded message.

D.5.2.3.3 Method 2 sets the volume of the input test signal to match that of speech level under normal conditions.

D.5.2.3.4 The room where the talkbox and system under test microphone are located should be quiet.

D.5.2.3.5 An emergency command center or fire command center will not be free of noise during an actual emergency. However, for testing purposes, the room should be relatively

free of extraneous noises that could affect the results. The purpose of the tests is to establish the baseline capability of the system and acoustic environment to support intelligible communications. Good design practice for an emergency command center is to isolate the space so that only emergency command personnel have access. In addition, the location of the microphone for manual input should be such that background discussions and noise are minimized.

D.5.2.3.6 Set up the talkbox in accordance with the manufacturer's published instructions.

D.5.2.4 Method 1 — Matching Recorded Message Level.

D.5.2.4.1 The intent of this method is to set the talkbox or audio source input level into the emergency communications system microphone so that the output at a location in the area under test is the same as the level of prerecorded messages played by the system.

D.5.2.4.2 The sound pressure level produced by the talkbox while playing the STI or STIPA test signal should be matched with the sound pressure level of the prerecorded voice message.

D.5.2.4.3 Two people will be needed to perform the calibration procedure. One person needs to be present at the talkbox while the other person needs to operate the analyzer at a typical location in the facility.

D.5.2.4.4 At a typical location in the facility, position the analyzer it so its microphone is approximately 5 ft (1.5 m) above the finished floor.

D.5.2.4.5 Set the analyzer (meter) to measure sound pressure level, A-weighted, fast.

D.5.2.4.6 Actuate the prerecorded voice message from the ECS.

D.5.2.4.7 The decibel reading at the analyzer will be somewhat erratic due to the nature of speech signals.

D.5.2.4.8 Record the highest dB reading the system produces.

D.5.2.4.9 Do not move the analyzer from the test location.

D.5.2.4.10 Turn off the prerecorded voice message.

D.5.2.4.11 Place the microphone of the emergency communications system at a distance from the talkbox as recommended by the microphone or ECS manufacturer.

D.5.2.4.12 Start the talkbox STI or STIPA test signal.

D.5.2.4.13 Adjust the talkbox sound level until the field measurement of the test signal is ±3 dB of the level generated when the prerecorded voice message was played and measured. This setting should not change for the remainder of the testing.

D.5.2.4.14 Begin field testing in accordance with Section D.6.

D.5.2.5 Method 2 — Matching Speech Level.

D.5.2.5.1 The intent of this method is to set the talkbox or audio source input level to the emergency communications system microphone to match that of an average person speaking into the microphone.

D.5.2.5.2 Set the analyzer (meter) to measure sound pressure level, A-weighted, fast.

D.5.2.5.3 Start the STI or STIPA test signal and hold the meter at a distance of 39.4 in. (1.0 m) on-axis from the talkbox or audio source.

D.5.2.5.4 Set the talkbox volume (level) so that the meter registers 65 dBA at a distance of 39.4 in. (1.0 m). This setting should not change for the remainder of the testing.

D.5.2.5.5 The distance from the microphone to the talkbox should be documented so that future tests can be set up consistently. Most microphone manufacturers or ECS equipment manufacturers will state a recommended distance for a person to hold the microphone when talking. Some microphone use chin guards or some physical means to help users know when they are holding the microphone at the correct distance. If the manufacturer has not recommended a talking distance, 4 in. (100 mm) is recommended as a guide.

D.5.2.5.6 Place the microphone of the emergency communications system at a distance from the talkbox as recommended by the microphone or ECS manufacturer.

D.5.2.5.7 A level of 60 dBA at one meter is required by IEC 60268-16, *Sound system equipment — Part 16: Objective rating of speech intelligibility by speech transmission index*, the standard that defines STI and STIPA and is considered a normal speech level. While 60 dBA at 1 m is documented as "normal" speech, in areas where there is background noise, the Lombard effect causes a person to talk at an elevated volume. For this document, the committee chose to use 65 dBA as more representative of speech levels during emergency situations. It is recommended that at least one field STI measurement be made at both 60 dBA and 70 dBA at one meter talking level to test the effects of elevated voice level.

D.5.2.5.8 Sound pressure level increases 6 dB whenever the distance is halved. So, the test could be set up so that the talkbox level achieves 65 + 6 = 71 dBA at a distance of 19.7 in. (0.50 m). Table D.5.2.5.8 shows different dB levels at distances that would be equivalent to 65 dBA at 39.4 in. (1.0 m).

Δ ***TABLE D.5.2.5.8*** *Audibility Equivalent to 65 dBA at 1-m Distance*

r (in.)	*r* (m)	L_P (dB)	*r* (in.)	*r* (m)	L_P (dB)	*r* (in.)	*r* (m)	L_P (dB)
0.1	0	117	4	0.10	85	11	0.28	76
0.2	0.01	111	5	0.13	83	12	0.30	75
0.5	0.01	103	6	0.15	81	20	0.50	71
1.0	0.03	97	7	0.18	80	24	0.61	69
1.5	0.04	93	8	0.20	79	39.37	1.00	65
2.0	0.05	91	9	0.23	78	78.8	2.00	59
3.0	0.08	87	10	0.25	77			

D.5.2.5.9 Begin field testing in accordance with Section D.6.

D.6 STI/STIPA Test Procedure.

D.6.1 General. This test procedure permits testing during either occupied conditions or during unoccupied conditions. See D.3.8.

D.6.2 Power. The system under test should be tested on secondary power for a minimum of 15 minutes and then on primary power for the remainder of the testing.

D.6.3 System Operation. Where two ADSs are adjacent to each other and not separated by physically barriers that significantly prevent noise penetration from one ADS to another, the notification appliances in both ADSs should be operating during the testing. It is acceptable for intelligibility testing to silence or disable other notification zones that would not potentially interfere with each other. However, regular testing per *NFPA 72* would require that all circuits be operated simultaneously at one point to ensure proper operation and to verify power requirements.

D.6.4 Occupied Testing.

D.6.4.1 Testing should be done during a period of time when the area is occupied and is reasonably close to having maximum background noise.

D.6.4.2 Set up the talkbox in accordance with Section D.4 and start the STI or STIPA test signal.

D.6.4.3 At each measurement point in each ADS measure the STI.

D.6.4.4 Document the results on plans or forms in a way that accurately describes the measurement point and that permits future testing at the same locations.

D.6.5 Unoccupied Testing.

D.6.5.1 General. Testing of speech intelligibility in the presence of the occupied ambient sound pressure level is the preferred method. However, for various reasons, including disruption of normal work, it might be desirable to only do "silent" testing during occupied periods and to do testing with the STI or STIPA test signal during unoccupied or less occupied conditions.

D.6.5.2 Number of Tests. This test method requires three different measurements at each measurement point, typically made during two site visits. The data for each measurement is saved in a format in accordance with the instrument manufacturer's requirements. The three data files are then post-processed to arrive at the final corrected STI.

D.6.5.3 Occupied Ambient Sound Pressure Level Measurement.

D.6.5.3.1 At each measurement point in each ADS measure the occupied ambient sound pressure level.

D.6.5.3.2 Save the measurement data in accordance with the instrument manufacturer's requirements to permit post-processing of the data.

△ **D.6.5.3.3** Document the results on plans or forms in a way that accurately describes the measurement point and that permits future testing at the same locations.

D.6.5.4 Unoccupied Ambient Sound Pressure Level Measurement.

D.6.5.4.1 At each measurement point in each ADS measure the unoccupied ambient sound pressure level.

D.6.5.4.2 Save the measurement data in accordance with the instrument manufacturer's requirements to permit post-processing of the data.

△ **D.6.5.4.3** Document the results on plans or forms in a way that accurately describes the measurement point and that permits future testing at the same locations.

D.6.5.5 Unoccupied STI Measurement.

D.6.5.5.1 Set up the talkbox in accordance with Section D.4 and start the STI or STIPA test signal.

D.6.5.5.2 At each measurement point in each ADS measure the uncorrected STI.

D.6.5.5.3 Save the measurement data in accordance with the instrument manufacturer's requirements to permit post-processing of the data.

△ **D.6.5.5.4** Document the results on plans or forms in a way that accurately describes the measurement point and that permits future testing at the same locations.

D.6.5.6 Post-Processing.

D.6.5.6.1 The corrected STI is arrived at by post-processing of the occupied ambient sound pressure level measurement, the unoccupied ambient sound pressure level measurement,

and the unoccupied STI measurement. In effect, the measured STI (uncorrected) is being corrected by adding in the effects of the actual expected (occupied) ambient sound pressure level.

D.6.5.6.2 The post-processing procedure or software provided by the instrument manufacturer should be used to calculate the final corrected STI for each measurement point.

D.6.5.6.3 Document the results on plans or forms in a way that accurately describes the measurement point and that permits future testing at the same locations.

D.6.5.6.4 Documentation of the final results for each point should include the results of all three measurements and the final corrected STI value. The manufacturer's software revision should also be included in the results documentation.

D.7 Post Test Procedures.

D.7.1 Test Closure. Upon completion of all testing, the emergency communications system should be returned to its normal operating condition.

D.7.2 Results.

D.7.2.1 It is also not the intent of this test protocol to describe how to interpret results or how to correct systems or environments that contribute to poor speech intelligibility. However, depending on the instrument used, it might be possible to have data retained by the instrument to determine possible causes and their effects on STI results. Consult with the instrument manufacturer to determine if the instrument has the capability to display or save the intermediate STI modulation indices and octave band measurement results and for instructions on how to interpret those data.

As noted in D.2.4, it is acceptable to perform either a single measurement or multiple measurements at a location. If a single measurement meets or exceeds the established acceptance criteria, that one measurement is considered the average for that location. It would not be necessary to take multiple measurements.

D.7.2.2 For each ADS, summarize the results in accordance with the performance requirements of D.2.4.

D.7.2.3 For an ADS that had multiple measurement points or that had multiple measurements at only one measurement point, calculate the average per D.2.4 and list the average and the minimum measurement per D.2.4 in the results summary.

D.7.3 Documentation.

D.7.3.1 The test results should be fully documented and provided to the building owner, the emergency communications system contractor, the system designer, the authority having jurisdiction, and any other individual or organization deemed appropriate.

Δ **D.7.3.2** In addition to the requirements for test documentation contained in *NFPA 72*, Chapter 10, the test results should include:

(1) Building location and related descriptive facility information
(2) Names, titles, and contact information for individuals involved in test
(3) Dates and times of tests
(4) A list of testing instruments, including manufacturer's name, model, serial number, and date of most recent calibration

(5) Technical description of emergency communications system
(6) Identification of ADSs
(7) Locations of specific measurement points (in a list or on a set of drawings)
(8) Site definition of ambient sound pressure levels
(9) STI/STIPA measurements at each measurement point
(10) Final corrected STI/STIPA values where the post-processing procedure is used
(11) Indication of whether or not the test met the pass/fail criteria
(12) Record of system restoration
(13) Any additional information to assist with future evaluation of system performance

Recording test results on building floor plans is an efficient way to document test results. In large halls, the data can be used to produce shaded "intelligibility maps," similar to topographic maps. Computer models also can be used to illustrate calculated or measured speech intelligibility results, as shown in Exhibit D.4.

Exhibit D.5 shows an intelligibility map for a medium-sized entertainment lounge. The lower part of the exhibit shows a cross section of the room taken from where the red line is shown on the upper plan view. For the design in Exhibit D.5, the software calculates an expected STI of 0.55, which corresponds to a CIS score of 0.74.

D.7.3.3 If appropriate, the plans and specifications addressed in D.3.3 should be updated based on the results of the test.

EXHIBIT D.4

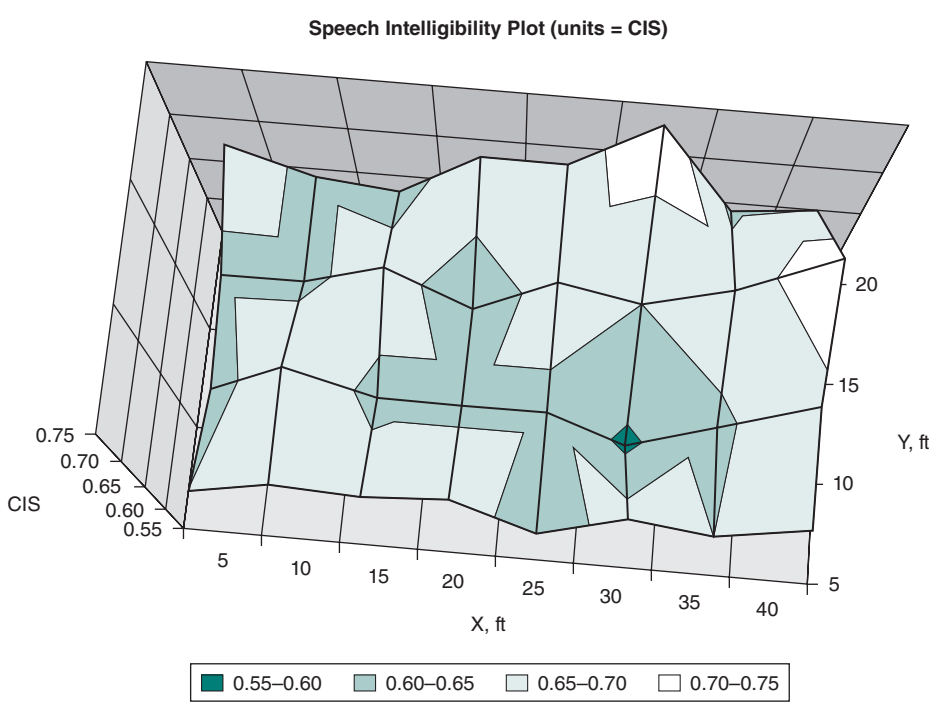

Speech Intelligibility Plot. (Source: R. P. Schifiliti Associates, Inc., Reading, MA)

EXHIBIT D.5

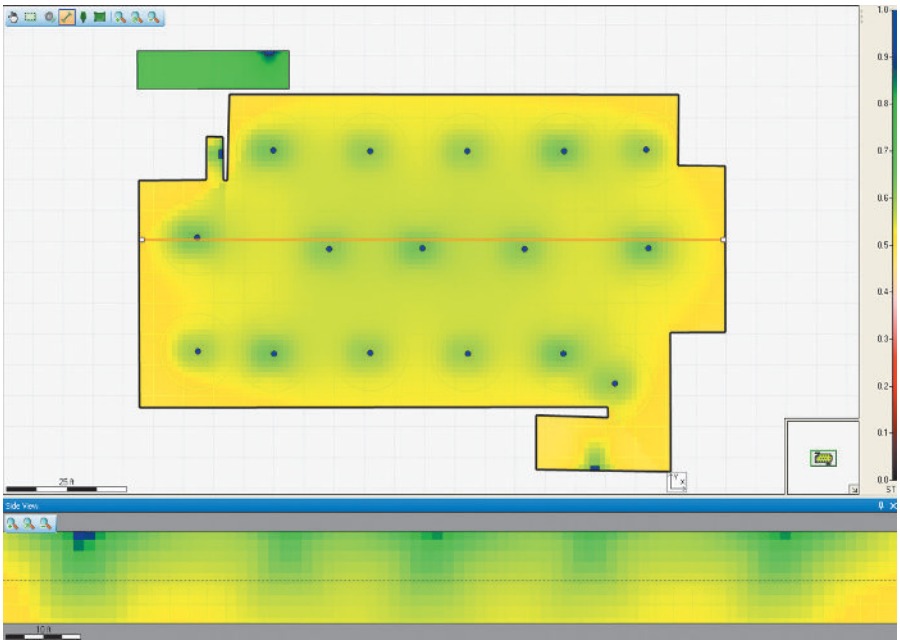

Intelligibility Model Using EASE Evac (AFMG Technologies GmbH). (Source: R. P. Schifiliti Associates, Inc., Reading, MA)

References Cited in Commentary

ANSI S3.2, *Method for Measuring the Intelligibility of Speech Over Communication Systems*, 2009, American National Standards Institute, Inc., New York, NY.

ANSI S3.5, *Methods for the Calculation of the Articulation Index*, 1969, American National Standards Institute, Inc., New York, NY.

ANSI S3.5, *Methods for Calculation of the Speech Intelligibility Index (SII)*, 1997, American National Standards Institute, Inc., New York, NY.

Crandall, I. B., "The Composition of Speech," *Phys. Rev*. 10 ser. 2 (1917): 75.

IEC 60268-16, *Sound system equipment — Part 16: Objective rating of speech intelligibility by speech transmission index*, 2011, International Electrotechnical Commission, Geneva, Switzerland.

IEC 60849, *Sound systems for emergency purposes,* 1998, International Electrotechnical Commission, Geneva, Switzerland.

ISO 7240-16, *Fire detection and alarm systems — Part 16: Sound system control and indicating equipment*, 2007, International Organization for Standardization, Geneva, Switzerland.

ISO 9921, *Ergonomics — Assessment of speech communication,* 2003, International Organization for Standardization, Geneva, Switzerland.

ISO/TR 4870, Acoustics — The construction and calibration of speech intelligibility tests, 1991, International Organization for Standardization, Geneva, Switzerland.

Jacob, K., *Understanding Speech Intelligibility and the Fire Alarm Code*, Bose Professional Systems, Framingham, MA, May 2001.

NECA 100, *NEIS Symbols for Electrical Construction Drawings,* National Electrical Contractors Association, Bethesda, MD, 2013.

NFPA 170, *Standard for Fire Safety and Emergency Symbols*, National Fire Protection Association, Quincy, MA, 2018.

Peutz, V. M. A., "Articulation Loss of Consonants as a Criterion for Speech Transmission in a Room," *Journal of the Audio Engineering Society,* 19, 11 December 1971.

Rodman, Jeff. *The Effect of Bandwidth on Speech Intelligibility,* Polycom, Pleasanton, CA, 2006.

Voice Intelligibility for Emergency Voice/Alarm Communications Systems

Robert P. Schifiliti, P.E., FSFPE
R. P. Schifiliti Associates, Inc.

This paper explores the broad concept of voice intelligibility and provides insights into the methods of designing and assessing intelligible voice systems.

BACKGROUND

The requirement for a voice alarm system to be "intelligible" was first introduced to the *National Fire Alarm Code* in 1999. In the 2019 edition of *NFPA 72®*, *National Fire Alarm and Signaling Code®*, this requirement for emergency communications systems (ECSs) is in 24.3.1.[1] Annex D of *NFPA 72* offers guidelines on how the intelligibility of systems and their environments might be predicted and assessed. This paper provides more discussion of the subject and includes an extensive bibliography.

Much of the research on speech intelligibility metrics started with the widespread acceptance of the telephone and the use of telephones and radios for military communications in the early part of the 20th century. It is not surprising that industries other than the fire alarm industry studied and solved the question of how to best measure or model speech intelligibility — it was necessary for the survival of those fledgling industries. With the telephone, the needs of the consumer drove the level of quality necessary for product success. The industry found that it became necessary to develop objective methods to evaluate products and services to ensure some baseline quality while also allowing transmission bandwidth to be limited to control costs and capacity. In other words, the industry wanted the voice transmission to be just satisfactory for the purpose without adding additional costs that improved the signals beyond what was really needed. Military communications using radio and telephone also drove the development of ways to measure or predict speech intelligibility. Testing for critical military applications places more emphasis on having reliable quality for accurate voice transmission than it does on costs. The needs addressed by *NFPA 72* for emergency communications applications are a combination of these goals. ECSs need to reproduce voice signals reliably, but they do not require that fidelity or character of the voice be maintained.

INTRODUCTION

Most fire alarm systems use a combination of audible and visual appliances to make noise and flash lights, signaling the need to evacuate a building or an area. However, in situations where egress is complex or difficult, such as in high-rise buildings or large factories, or for ECSs used for a variety of threats other than fire, human voice is needed to provide *information* and *instructions*. If an audible signal is not loud enough to alert occupants, it has failed its mission. If a voice signal is not understood, it too has failed. Listening

to an unintelligible voice announcement is like trying to read in the dark — depending on a number of conditions, it might or might not be possible to get useful and accurate information in a timely manner. Simple fire alarm messages might be repeated sufficiently to overcome some degree of poor intelligibility. However, rapid onset emergencies and emergencies requiring live transmission of voice messages cannot rely on repetition for reliable delivery.

Failure to understand a voice message can be the result of several factors. A message that is not *intelligent* may not be understood in the way the talker intended. For example, the sentence "Go to Stair B if there is no smoke" can be interpreted at least two ways ("no smoke where I am" or "no smoke in the stair") and therefore may not be understood by some listeners. Similarly, if told to "follow the building emergency evacuation plan," you need to know what that plan is to understand the command. Those messages were not crafted intelligently. If a message is spoken in Spanish and the listener only understands Cantonese, the message is not understood. Also, a person talking too fast or someone with a speech impediment can cause a message to be misunderstood. Finally, even a well-spoken, intelligent message in the listener's native language can be misunderstood if it is not audible to the listener or if its delivery to the listener is distorted by either the delivery system or the acoustic environment. See Exhibit 1. These factors form the basis for the performance, specification, modeling, measurement, and prediction of speech intelligibility. Intelligible voice communications reduce the chances of "Stair B" being misheard as "Stair D," "Stair C," or "Stair E."

EXHIBIT 1

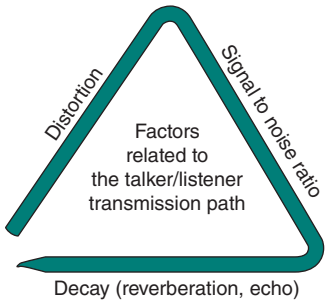

Causes of Unintelligible Communications. (Source: R. P. Schifiliti Associates, Inc., Reading, MA)

THE PROBLEM

Is there a problem with the intelligibility of installed and operational in-building fire emergency voice/alarm communications systems (EVACs) and other voice systems? Like audibility of tone systems, there are installations that perform well and others that fail. Fires such as the Kings Cross fire in London in 1987 and an apartment fire in York, Ontario, have been cited as situations where intelligibility of voice communication to occupants was a contributing factor in the losses.[2,3] However, more numerous are the many systems that have not (yet) been called to action during an emergency that have been judged subjectively to be of low but marginally acceptable intelligibility for one reason or another. Systems that are "tested" during nonemergency situations and qualitatively judged acceptable might not be adequate during an emergency when people under stress talk faster and louder. Also, under stress a person's cognitive ability tends to reduce about four grade levels, making it more difficult to understand complex words and messages, particularly if the listener must strain to understand a low-quality voice message.[4]

Intelligibility is often an issue between designers, contractors, owners, and authorities having jurisdiction who disagree whether a system is adequate or not. In this respect, intelligibility is similar to audibility. For many years, codes required systems to be "audible throughout the protected area" without any definition of what *audible* meant. Nor was there any description of what *throughout the protected area* meant. The result was many systems with corridor-based sounders and ineffective audibility in apartments, classrooms, and offices. Sometimes the opposite occurs, with some authorities requiring audibility in small closets and other spaces that would not be considered "occupiable."

"Audible throughout the protected area" typically involved a simple "listen" test by the authority having jurisdiction. One authority having jurisdiction could insist that a fire alarm system audibility was "not loud enough." After adjustment on the back of the appliance to make it louder, his "trained ear" passes the system. The adjustment of the mechanical horn had changed the tension on a vibrating plate, which in turn lowered the frequency of the appliance slightly. The authority having jurisdiction could hear the lower frequency better than the higher frequency due to a partial hearing loss at the higher frequency band. Disagreements such as this regarding audibility led the industry to adopt well-established audio definitions and measurement systems that had been already researched, tested, and developed by audio professionals. This moved the fire alarm industry from using *subjective* evaluations of audibility to *objective* methods.

In 1996, the *NFPA 72* Technical Committee on Notification Appliances for Fire Alarm Systems began working with the audio industry to learn more about speech intelligibility and how to establish objective performance requirements for voice systems.

SPEECH INTELLIGIBILITY DEFINED

Exhibit 2 shows the path of a voice signal from a talker to a listener and is useful in understanding and categorizing the places where the signal can be affected in its delivery. This pathway encompasses the three categories shown in Exhibit 1 that lead to unintelligible communications.

The exhibit shows each part of the communications chain and the types of error that can be introduced into the message. Each segment of the message path shown in Exhibit 2 affects whether the listener understands the information content. Failure of any one of the five stages shown in the figure results in a failure to understand the information. Problems or faults in each of the stages are cumulative. For example, a person might speak with an accent but still be understood by a listener who is facing the talker. The communications system might add some distortion that results in the message not being understood. Or, perhaps even with an accent and some minor distortion by the system electronics, it is understood when there is little or no background noise, but not understood when there is background noise. Or, perhaps the system is too loud — a large signal-to-noise ratio — resulting in excessive reverberation that causes degradation of the speech intelligibility.

Others have begun to address and attempt to understand the two ends of the communications chain shown in Exhibit 2 — the talker and the listener.[5,6] Typically, the listener is assumed to be normal, which does not necessarily mean average. The normal population of listeners has many people with some degree of hearing loss. In fact, normal hearing can mean up to a 20 dB hearing loss from average. Listeners might also have some cognitive challenges.

Under most scenarios, there is some control over the talker. Through planning and training, a talker who has a speech impediment or an accent foreign to the intended audience would likely not be a candidate. Training and planning will also help ensure that the talker holds the microphone at the correct distance and angle, talks slowly and clearly, and uses simple language. Training and planning overcome some of the cognitive challenges of the listener and some of the effects caused by reverberation. New research on messaging strategies and message content for emergency communications will also help to ensure that concise, easy to understand, meaningful messages are used that can reduce the impact of distortion, decay, and noise

EXHIBIT 2

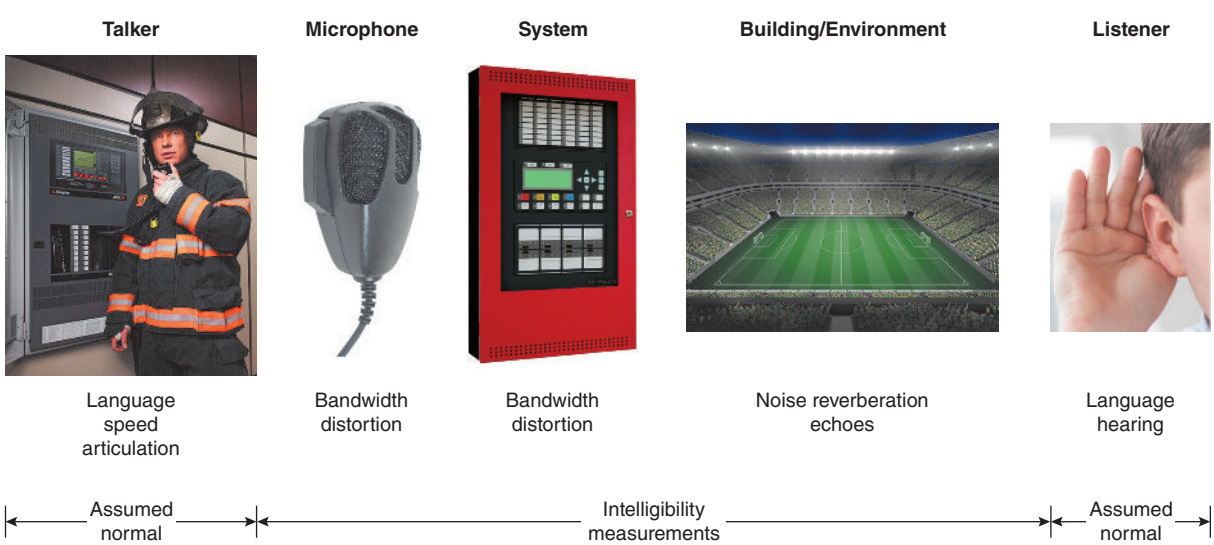

Voice Signal Path. (Source: Adapted from R. P. Schifiliti Associates, Inc., Reading, MA; Photos courtesy of Johnson Controls, Westminster, MA, and Shutterstock)

on intelligibility.[7] *NFPA 72* contains Annex G, Guidelines for Emergency Communications Strategies for Buildings and Campuses, which was distilled from research on the subject of effective messages.

In the 1990s, the *NFPA 72* Technical Committee on Notification Appliances for Fire Alarm Systems researched and began to address the performance requirements for the communications system and listening environment. For the purposes of this paper, speed of talking, language, and talker articulation are not addressed directly but indirectly — because a system that can reliably deliver a message, with a large signal-to-noise ratio and a limited amount of distortion, reverberation, and echo has a higher likelihood of being understood even when a talker introduces problems or when a listener has degraded hearing. The cellular telephone industry has no control over the talker and the listener. Nevertheless, the industry uses intelligibility measurement and prediction methods to understand and improve the parts of the communications chain (Exhibit 2) that it can control and to increase the likelihood of successful communication between the talker and the listener.

Speech intelligibility is a measure of the effectiveness of speech. The measurement can be expressed as a percentage of a message that is understood correctly.[8] Speech intelligibility does not imply speech *quality*. A synthesized voice message may be completely understood by the listener, but may be judged to be harsh, unnatural, and of low quality. A message that lacks quality or fidelity may still be intelligible.

FACTORS AFFECTING SPEECH INTELLIGIBILITY

Satisfactory speech intelligibility requires adequate *audibility* and adequate *clarity* of the voice message. Audibility is relative to the background noise — the signal-to-noise ratio. The audibility of a voice message cannot be directly compared to the audibility of a tone signal because of the modulation of voice signals. Exhibit 3 is a spectrogram showing an alert tone followed by a voice message. A tone and a voice message that are both perceived as equally loud may have considerably different readings on a dB or dBA meter using fast or even slow time constants. That is one reason that audibility measurements are not required by *NFPA 72* for voice signals. However, the integrated average sound pressure level, L_{eq}, of a voice message taken over some time period can be measured and used to compare to background noise. While a positive signal-to-noise ratio of about 10 dB is usually a design goal for voice, a 0 dB ratio or even a negative ratio can still result in some or all of a voice message being understood. This is due, in part, to differences between the noise and speech patterns and to the complexity of the human brain. This phenomenon is often referred to as the "cocktail party effect" and has been extensively researched.[9] So while background noise or the signal-to-noise ratio is important, there are other factors, as shown in Exhibit 1.

Clarity is the property of sound that allows its information-bearing components to be distinguished by a listener.[10] Phonemes are the smallest phonetic unit capable of conveying a distinction in meaning in a particular language and are instrumental in accurate word recognition.[11] Examples are the *m* of *mat* and the *b* of *bat* in English. Clarity is the freedom of these sound units from distortion introduced by any part of the sound system or environment shown in Exhibit 2.

The reduction of clarity by distortion can be caused by the following:

1. Amplitude distortion caused by the electronics/hardware
2. Frequency distortion caused by either the electronics/hardware or the acoustic environment
3. Time domain distortion due to reflection and reverberation in the acoustic environment

Research done by Richard Heyser[12] of the California Institute of Technology's Jet Propulsion Laboratory regarding these three effects led to the development of time delay spectrometry (TDS), one of the most significant scientific advancements in the measurement and evaluation of audio system and acoustic environments.

In most cases, the designer of an ECS has little or no control of the elements shown in Exhibit 2. The designer might be able to choose a system that has less distortion than another. Unlike high fidelity audio systems, there is no requirement for testing and reporting quality

EXHIBIT 3

Spectrogram Showing Modulated Voice Message Following T3 Tonal Alert Signal (Source: R.P. Schifiliti Associates, Inc., Reading, MA)

information such as harmonic distortion for an ECS system. Loudspeakers are tested for frequency response, and the range is listed in the product specifications. Many manufacturers now voluntarily provide loudspeaker data files suitable for use in acoustic modeling software. The properties of the acoustic environment are usually determined by others. However, if testing, modeling, or intuition indicates that some changes could improve system performance, recommendations can be made.

One area that affects voice intelligibility and that can be controlled to some extent is the quality of the recording of any prerecorded messages. The quality is determined by the sampling rate and by the bit depth used when recording the message. Many older systems used very low quality to reduce the file size to work with older chips of limited capacity.

Exhibit 4 shows the effects of both sampling rate and bit depth on how well a signal is reproduced digitally. The top half of the exhibit shows a pure sine wave with an adequate but low sampling rate. The sampling rate determines when the recorder (or program/app) looks for a signal. If it "sees" a signal, the bit depth of the recording determines what amplitude value is assigned to that sample. The top has a sampling rate that is six times the frequency of the sine wave. With a bit depth of two, a sample will be either "on" or "off." Suppose that the frequency of the sine wave were four times that of the sampling rate. Some of the sound waves would fall between sampling times and never be recorded. The bottom half of the exhibit shows the same sine wave with both a higher sampling rate (12) and a higher bit depth (8). The resulting digital waveform more closely approximates the original, analog sound.

Accurate construction of a signal is possible as long as the sampling frequency is at least twice the highest desired signal frequency. CDs are recorded with a sampling frequency of 44,100 Hz, which allows reproduction of frequencies up to 22,050 Hz. It is not necessary for emergency voice systems to reproduce these high frequencies. What should the target be? Voice intelligibility depends on the reproduction of consonants. In general, the range of 1000 Hz to 4000 Hz is most important for these sounds, with the 2000 Hz band being the most important. In some high-challenge scenarios, good reproduction up to 8000 Hz can improve performance slightly. If good reproduction of sounds into the 4000 Hz range is desired, then the sampling rate should be at least 8000 Hz. For higher-quality delivery systems, and to get better reproduction of important consonants, a file sampled at 16,000 Hz is usually sufficient — but only if the delivery channel can reproduce up to 8000 Hz faithfully. The sampling rate should also consider the capability of

EXHIBIT 4

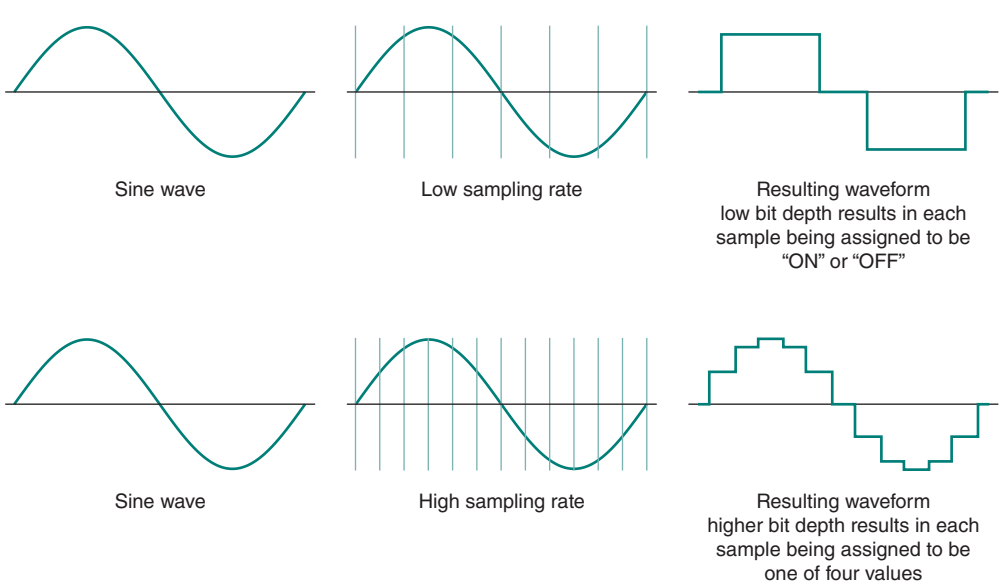

Effects of Sampling Rate and Bit Depth on Digital Recording. (Source: R. P. Schifiliti Associates, Inc., Reading, MA)

the sound system itself. If a system is tested to the current listing standards range of 400 Hz to 4000 Hz, there is no benefit to trying to reproduce sounds above 4000 Hz. In fact, including sounds outside of the performance range of the equipment can lead to more distortion of the signal. Challenged to provide systems capable of delivering better speech intelligibility, manufacturers are listing their products for performance levels that exceed the minimum listing standards.

The bit depth of an audio sample determines the resolution of the signal. This affects noise, dynamic range, and the signal-to-noise ratio of the recorded message. Increasing the bit depth decreases noise, increases the dynamic range, and increases the signal-to-noise ratio. CDs are recorded with a bit depth of 16, while DVD audio uses a depth of 24 bits. As with the sampling rate, the bit depth for voice messaging can vary depending on the system goals. A bit depth of 16 bits provides natural-sounding voice messages. A bit depth of 8 bits tends to sound a little muddy, flat, and noisy — but might be adequate.

Exhibit 5 shows a sample of an actual emergency voice message. The plot shows that there are not any pure sine waves (tones). Because voice is composed of sounds that are modulated, the effects of sampling frequency and bit depth on speech intelligibility can be dramatic.

The amount of memory needed for a digital recording is determined as follows:

Bit rate = (sampling rate) × (bit depth) × (number of channels [one for mono, two for stereo])

File size in bytes = (bit rate) × (time)/(8 bits/byte)

EXHIBIT 5

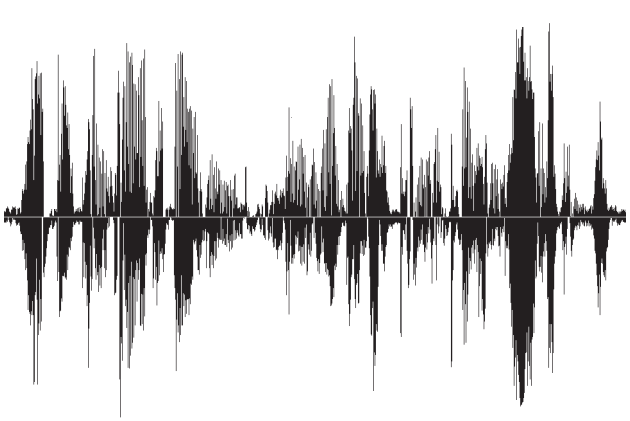

Speech Spectrogram. (Source: R. P. Schifiliti Associates, Inc., Reading, MA)

Thus, a 16-second mono recording at a sampling rate of 8000 Hz and a bit depth of 16 bits would require:

$$\text{Bit rate} = 8000\ \text{Hz} \times 16\ \text{bit} \times 1 = 128{,}000\ \text{bits/sec} = 128\ \text{kb/sec}$$

$$\text{File size in bytes} = 128\ \text{kb/sec} \times 16\ \text{sec}/(8\ \text{bits/byte}) = 256\ \text{kb}$$

This is a small file by today's standards. The audio memory chip will have several files with test messages, sample alerts, messages, and maybe even speech intelligibility test signals. In the past, chip capacity was a limitation. However, today's memory chips are inexpensive and have a large enough capacity; there is every reason to record messages at higher-quality levels.

SPEECH INTELLIGIBILITY MEASUREMENT/ PREDICTION (SUBJECTIVE OR OBJECTIVE?)

Is the measurement of speech intelligibility subjective or objective? It can be argued that intelligibility and audibility measurements are both subjective and objective evaluations. The definitions and the measurements used for audibility are based on many years of testing with real people. The decibel (dB) is a ratio of the fluctuating sound pressure to the threshold pressure variation of human hearing. Certainly, the threshold of human hearing is subjective. The threshold of hearing is specific to a particular individual and is modified or affected by personal views, experience, or background.

However, when a large data set is analyzed and used scientifically and statistically to establish a threshold, and when used as a baseline or standard for relative comparison, it becomes an objective quantity. It is objective because the chosen standard is used as a reference to remove statistical variation and distortion by personal feelings, prejudices, or interpretations for subsequent measurements, reducing subjective factors to a minimum. So, although the threshold of hearing varies from individual to individual, a representative standard quantification (0 dB) has been established for comparison of other sound level measurements.

Similarly, the human ear hears some frequencies better than others. Of course, no two human hearing systems (ears and brain) are the same. Nevertheless, after considerable research the scientific community has accepted the Fletcher-Munson curves as "typical" of human hearing.[13,14] Going further, the audio and psychoacoustics communities have adopted a smoothed inverse of one of the Fletcher-Munson curves to define the A-weighting curve. The Aweighting curve is used to adjust dB measurements for

the way a human ear will perceive the sound. Thus, dBA measurements are objective evaluations of sound even though they are based on numerous subjective tests.

Speech intelligibility evaluations also can be either subjective or objective. Reading an article from a newspaper and asking a listener to write down what they understand the message to be is a subjective evaluation. One reader/talker might better enunciate certain words or slur other word parts. The news article used for a test one day may differ from one used another day and may be composed of short simple words, or the word and phoneme order may be less susceptible to distortion caused by reverberation and echo. At the other end of the communication chain, the listener used in the evaluation might have hearing deficiencies or learning disabilities, including auditory dyslexia. Or, the listener that might be expected to occupy the space on a regular basis might have hearing that is better than average. The content and context of the article may cause the listener to guess at words and content that are not intelligibly received. For subject-based testing to be *objective*, it must use a scientific and statistically valid methodology. Otherwise, it is not a valid prediction of how the general public might perceive, receive, and interpret the voice messaging delivered by the system in that space.

Persons interested in fire alarm systems started a discussion with the idea that a simple test of intelligibility could be performed using the "newspaper test." It was suggested that professionally developed word lists designed to test all components of human speech be used. It was then suggested that a protocol be established to document the conditions and variables. The protocol suggested multiple listeners and statistical analysis of the results. Interestingly, the protocol began to resemble established international standards that had been developed by researchers in the audio field more than 50 years ago and that have been used by acoustic professionals and audiologists for decades to objectively evaluate personal hearing ability, sound systems, and acoustic environments.[15]

One should not confuse subjective with subject-based testing. It is possible for tests using talkers and listeners (subject-based tests) to be objective. The key is to use established protocols that reduce the impact of personal conditions and produce results that are repeatable. Similarly, an instrument-based test that is repeatable for a given set of conditions may not be objective if it does not have an established basis in reality. Both subject-based testing and instrument-based testing require peer-reviewed research, testing, and established standards to become accepted objective measurement methods.

As with audibility, any measure of speech intelligibility is a prediction of how well the system will perform at other times. All intelligibility prediction methods are predicated on subject-based tests. A talker says a word — usually in a sentence — and a listener writes down what the listener thinks he or she heard. For example, "It is now time to write the word *boat* on your test sheet." The talker is careful not to emphasize the word or to change the pace of talking. The score for that test is either right or wrong — 100 percent or 0 percent. That single test does nothing to predict the score for future tests of the communications system and listening environment. If many words are tested, eventually a statistic is obtained that predicts the percentage of the time that particular listener will understand words delivered by the communications system.

However, a test with a single listener does not tell whether the general population will have a similar listening comprehension. It is necessary to use a group of listeners and to score the whole group. The group should represent the general population so that a good cross section of ears and brains is used. This measurement method results in a statistic that is a prediction of how the public will understand messages delivered by the system. These objective, subject-based test methods have been tested and standardized. Objective, instrument-based tests have been developed and correlated with the subject-based test methods. (The *National Fire Alarm and Signaling Code Handbook* commentary text following D.2.4.2 in Annex D describes how a scientific instrument–based test can be developed to replicate how humans understand speech delivered in a space by a sound system.)

MEASURING/PREDICTING SPEECH INTELLIGIBILITY

The performance of a voice system depends on the system hardware and the acoustic environment. They cannot be separated when evaluating speech intelligibility. A fire alarm horn can be specified for a space and required to produce 80 dBA at 10 ft (3 m). However, the power supply and wiring will affect the output of the horn. The mounting location will affect the distribution of the sound. The acoustic environment will affect the energy dissipation in the space and the loudness. Finally, the background noise will affect whether the horn is heard reliably. The fire alarm industry has recognized that there are situations where the installed field performance of an audible signaling system must be measured to evaluate its performance with respect to the system's design objectives. Similarly, speech intelligibility is affected by all of these systems,

environmental factors, and more. (See section on Factors Affecting Speech Intelligibility.) Thus, the performance metric for speech intelligibility must also assess all of the requisite parameters.

International standards organizations — namely, the International Electrotechnical Commission (IEC) and International Standards Organization (ISO) — have reviewed and evaluated objective methods for evaluating speech intelligibility. Some of the methods recognized and accepted in international standards and by the acoustics and professional sound industries are subject-based test methods, and others are instrument-based test methods. For each of the recognized methods, there exists an internationally accepted standard for the test method/protocol. Four of the recognized methods use test instruments. Three subject-based methods are also recognized. One method has both a subject-based solution and an instrument-based solution. These methods are summarized in Table 1.

Each of the established methods for measuring speech intelligibility has its own scale. By comparing evaluations between different test methods, a common intelligibility scale (CIS) was developed.[21] The CIS permits comparisons of test results using the different methods. It also permits a designer, code, or authority having jurisdiction to specify a requirement that can be evaluated using any one of the test methods listed in the table. Consult the references for more detail on each of the test methods.

The Speech Transmission Index (STI) is the most widely used intelligibility index and has been implemented in portable equipment using a modified method called STIPA (STI Public Address). For this reason, the performance metrics cited in this document use units of STI with units of CIS in parentheses. The relationship between STI and CIS is:

$$CIS = 1 + \log_{10}(STI)$$

Annex D of *NFPA 72* recommends specific acceptability criteria in the form of a minimum and an average STI — with the equivalent CIS score also listed. See D.2.4, which also has extensive discussion on the variability of measurements, precision, and rounding of results.

PLANNING, DESIGNING, INSTALLING, TESTING, AND USING INTELLIGIBLE SYSTEMS

How does measuring speech intelligibility solve the problem of unintelligible systems? Measuring the audibility of a system does not make it louder or softer. Similarly, measuring speech intelligibility will not directly result in better system performance.

A system that reliably communicates a message to a listener must be properly planned, designed, and installed. Testing not only uncovers faults and allows corrections to be made, but also shows successful techniques for future reference. Finally, even the perfect system design can be improperly adjusted, unbalanced, or not properly installed and result in degradation of the signal to a point where it is not understood by the user.

The scope of *NFPA 72* is not to plan or design systems, but to provide minimum prescriptive and performance requirements for systems and components. *NFPA 72* does not tell you when you must have smoke detectors nor when you must have voice systems. Those concerns are the jurisdiction of other codes, laws, standards, and authorities. One issue that designers and authorities must face when planning a system is the question of where intelligible voice communication is needed. For this reason, in part, Chapter 18 of *NFPA 72* requires system designers to plan and designate acoustically distinguishable spaces (ADSs).

In a large space used for meetings, conventions, and trade shows, an ECS needs to be reliably intelligible because it is intended to give information to the public that is not familiar with the space. However, in a high-rise apartment building, is voice intelligibility required in all spaces? The ECS is used to give information to occupants when the fire is not in their apartment. If the fire is in their particular apartment, their own local smoke alarms are used to provide an audible alert. If the fire is not in their apartment, the fire alarm system is used to give them information about whether to evacuate, relocate, or remain in place. It may not be necessary that the in-building fire EVACS or MNS be intelligible in all parts of the apartment. It certainly must be audible in all parts of the apartment, as is currently required by the codes. However, it may be sufficient to provide a loudspeaker in a common space and to provide an adequate audible tone signal in other spaces to awaken and alert the occupants.

The voice message produced by a living room loudspeaker appliance may not be intelligible behind closed bedroom and bathroom doors. However, the occupants, having been alerted and not being endangered in their own apartments, can move to a location where a repeating message can be heard intelligibly. The same signaling plan may work for office complexes: A person may have to open his or her office door to understand the message. In large public spaces, a person should not have to move any great distance to find a place where

TABLE 1 *Speech Intelligibility Test Methods*

Method	***Standard Referenced***	***Comments***
STI — Speech Transmission Index	IEC 60268-16, *Sound system equipment — Part 16: Objective rating of speech intelligibility by speech transmission index.*[16]	An objective method. Requires hardware and software for measurement and solution.
RASTI — Rapid or Room Acoustics Speech Transmission Index	IEC 60268-16, *Sound system equipment — Part 16: Objective rating of speech intelligibility by speech transmission index.*[16]	An objective method. A reduced STI method. Available in a handheld format. Effectively replaced by STIPA. Not included in CIS graph.
PB — Phonetically Balanced Word Scores	ISO/TR 4870, *Acoustics — The construction and calibration of speech intelligibility tests.*[15]	A subject-based method. Has one PB example with a 50-word list. ANSI S3.2, *Method for Measuring the Intelligibility of Speech Over Communication Systems*,[20] is a better reference for evaluations using the English language.
MRT — Modified Rhyme Test	No reference given.	A subject-based method. Has the same limits as given in ISO/TR 4870.[15] ANSI S3.2 is a good reference.[20]
AI — Articulation Index	ANSI S3.5, *Methods for the Calculation of the Articulation Index.*[17] ANSI S3.5, *Methods for the Calculation of the Speech Intelligibility Index (SII).*[18]	An objective method. The 1969 version of ANSI S3.5 is referenced and has since been updated to the 1997 edition. Requires hardware and software for measurement and solution.
$\%AL_{cons}$ — Articulation Loss of Consonants	Peutz, V. M. A. "Articulation Loss of Consonants as a Criterion for Speech Transmission in a Room, Journal of the Audio Engineering Society," 19(11).[19]	A subject-based method.

he or she can understand the message. In some spaces, such as corridors or large rooms, it might be acceptable to have intelligible voice near loudspeakers and to have lower speech intelligibility between loudspeakers. When a marginally intelligible announcement is made, people naturally turn their heads and sometimes move to positions where they can perceive the announcement more intelligibly. Thus, for these spaces, intelligibility is important and the statistical performance recommended by Annex D becomes useful. The performance requirement recommended in Annex D allows up to 10 percent of the measurement locations in an ADS to fail. See D.2.4.1, D.2.4.8, and D.2.4.10. The remaining measurements must have a certain minimum (0.45 STI or 0.65 CIS) and a certain average (0.50 STI or 0.70 CIS). If an ADS is small enough to require only one measurement location (see the requirements for measurement point spacing in Annex D), the result should be 0.50 STI (0.70 CIS) or more for the ADS to pass the recommendation for speech intelligibility.

Once a designer plans to have some type of system and determines that the system must be intelligible in certain spaces or areas, *NFPA 72* recommendations become the basis for *design objectives* or goals. For complex issues, such as visual signaling, the Code often starts with empirically based prescriptive requirements. These are menus of solutions that designers choose from. Unlike visual notification, voice signaling does not lend itself well to prescriptive design.

There are prescriptive rules that sound system designers often start with, such as 1 watt per 750 ft^2 to 1000 ft^2 (70 m^2 to 93 m^2). However, these guidelines must be adjusted to the acoustic environment, and they assume certain equipment performance characteristics. Don't the environment and equipment also affect the performance of visual signaling systems? Yes, but to a lesser, more controllable degree. The prescriptive requirements for

visual notification appliances are based on possible equipment degradation (power supply voltage and current) and on conservative assumptions about ambient lighting conditions and surface colors. The effects of varying acoustic environments on speech intelligibility have a much wider range and impact and are not as intuitive to system designers who are not experienced in professional audio design. Prescriptive solutions for voice systems could result in severe overdesign and would not necessarily guarantee intelligibility of the message. For example, evaluation of an installation in an open-plan office may show that the signal-to-noise ratio is the main problem with failure to meet the intelligibility performance requirement. However, simply specifying a louder system would result in degradation of the intelligibility in parts of the open office that do not have as many cubicles or where tile is used in lieu of carpet.

As another example, consider a large space with two ceiling heights (low and high) and a sound system. One of the basic concepts in the design of intelligible sound systems is to have all listeners in the direct field of a single loudspeaker. If a person is in the direct field of two loudspeakers, the sound from the farther one may arrive at some time after the sound from the closer loudspeaker. The degree of impact on intelligibility depends on the time difference. Distributing the loudspeakers to reduce or eliminate the overlap of the direct field sound is the best design practice. Though at first counterintuitive to many fire alarm system designers, the smaller space (lower ceiling height) requires a smaller spacing between the loudspeakers. See Exhibit 6. Alternatively, loudspeakers with a higher degree of directivity can be used at a smaller spacing. For example, an 8 in. (200 mm) diameter loudspeaker is more focused (smaller cone) than a 4 in. (100 mm) loudspeaker.

Sound does not come out of a loudspeaker in a perfect cone, as shown in Exhibit 6. Also, the sound does not stop at the edges of the cones shown in the figure. A good design for speech intelligibility is to have a uniform distribution of energy. Exhibit 7 shows the relative sound level that a person might experience as he or she walks through a space with two loudspeakers driven at relatively high levels. Directly under a loudspeaker, the sound level is very high. Between two loudspeakers, it is lowest. The lowest level should be designed as the code-required minimum or the minimum needed for good intelligibility. The highest level should not exceed the code maximum of 105 dBA. Exhibit 8 shows the same space with more loudspeakers, closer together, but driven at a lower level. The minimum level is the same. But now, the maximum level is lower. The reduced amount of energy lowers reverberation, thus improving intelligibility.

How does reverberation affect speech intelligibility? As previously discussed speech is composed of individual sounds called phonemes. The most important phonemes are those that produce consonants. In a reverberant space, sound from a loudspeaker reaches your ear and then continues past and strikes a surface. If it has sufficient energy, there is some reflection off that surface, and possibly others, before it comes back to your ear. The time it takes to travel this extended path to get back to your ear means that it arrives when some other (later) phoneme from the direct source is arriving. For example, with the word "boat," the reflected "b" may arrive just when you are hearing the "oa" sound or the "t" sound. In an extreme comparison, this is like trying to listen to hundreds of people talking to you at the same time. There is a direct inverse relationship between reverberation and speech intelligibility.

Similar to reverberation, standing at a point where you receive sound from two loudspeakers can affect intelligibility. If you are at a point that is equidistant to both, the phonemes arrive at the same time. But, if you are closer to one than the other, then they arrive out of synch. This is a common problem where loudspeakers are wall mounted at the ends of corridors.

EXHIBIT 6

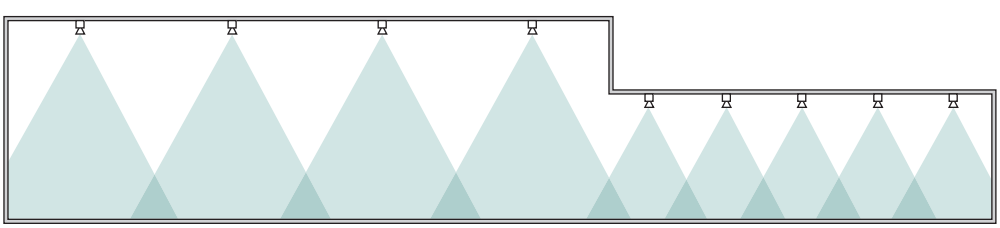

Distribution of Loudspeakers Showing the Need for Reduced Spacing in Smaller Spaces. (Source: R. P. Schifiliti Associates, Inc., Reading, MA)

EXHIBIT 7

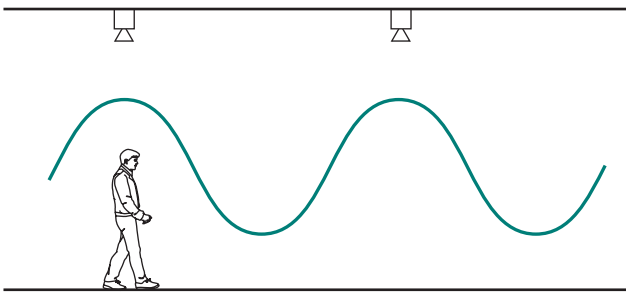

Relative Sound Level Distribution (1). (Source: R. P. Schifiliti Associates, Inc., Reading, MA)

EXHIBIT 8

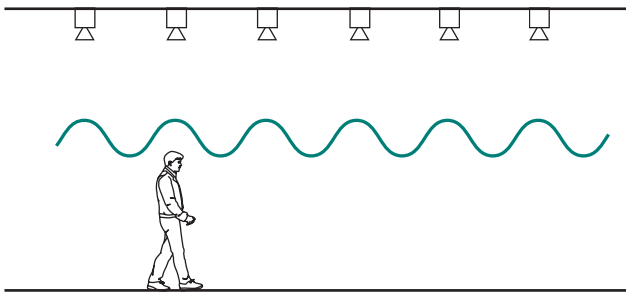

Relative Sound Level Distribution (2). (Source: R. P. Schifiliti Associates, Inc., Reading, MA)

A system designed for intelligible voice communication typically aims for a difference of no more than about 6 dB to 10 dB between the high and the low sound pressure level presented to the listener (Exhibit 8). That sound level is predominantly a function of the output of the loudspeakers and the distance to the listener. The number of loudspeakers heard also can affect the sound level. If a person is directly between two sound sources of equal volume, the net sound level will be +3 dB compared to that from either loudspeaker by itself. Reverberation and echoes can also contribute, though a good design attempts to minimize these factors.

The output of a loudspeaker can be represented by a polar plot of sound level in dB as a function of angle from the main axis, as shown in Exhibit 9. The plot shows a particular ceiling-mounted loudspeaker with an output that is reduced about −6 dB at an angle of 75 degrees off-axis — a 150-degree cone. The plot shown is for the output at a frequency of 2000 Hz. The shape would be different at different frequencies. The 2000 Hz plot is used as that frequency is considered most important for the production of phonemes that make up consonants.

The designer cannot just aim to have 150-degree cones meet at or slightly above ear level. That scheme accounts for the fact that at the 75-degree off-axis point, the loudspeaker is putting out 6 dB less, but it does not account for the fact that the sound must also travel a greater distance from the loudspeaker than if the person were directly under the loudspeaker. It can be mathematically shown that as a person walks from under a loudspeaker to a point 75 degrees off-axis, he or she will actually experience a loss of 11.7 dB just due to the increased distance from the loudspeaker. This has to be added to the loss given by the polar plot. This phenomenon is independent of the particular model loudspeaker. In this example, the distance loss is given by:

$$\Delta dB = 20\log_{10}(\cos\theta)$$

where θ is the angle off-axis.

For the loudspeaker in this example, an additional 6 dB is lost at 75 degrees off-axis due to the polar distribution of the sound for a net loss of 11.7 dB + 6 dB = 17.7 dB. At what angle does the combination of polar output data and distance attenuation result in a net difference of only

EXHIBIT 9

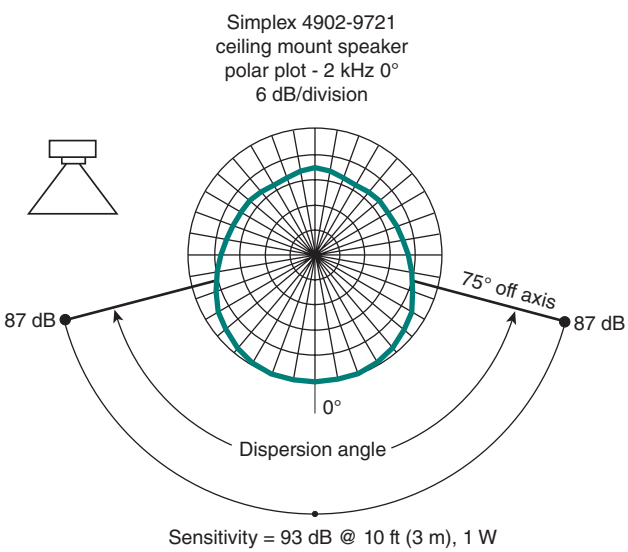

Polar Plot for a Ceiling-Mounted Loudspeaker. (Source: NEMA Standards Publication SB 50-2014, National Electrical Manufacturers Association, Rosslyn, VA)[22]

6 dB or less (our design goal)? Exhibit 10 shows more precise polar loss data, the distance loss calculations, and the net loss for several angles.

For that particular loudspeaker, a design must use cones having a 104-degree angle (52 degrees off-axis) to ensure no more than a 6 dB difference between the loudest and lowest sound levels. However, for a design where the cones of two loudspeakers meet at the −6 dB point, each loudspeaker is contributing the same sound level to the listener. Therefore, the net sound level would be +3 dB. For this loudspeaker, the contribution from one loudspeaker at an angle of 60 degrees would be −9 dB relative to the on-axis value. Therefore, with two loudspeakers the relative loss would be −6 dB. Thus, the loudspeakers could be spaced so that 120-degree cones meet at or slightly above ear level. The cones depicted in Exhibit 6 overlap at a plane chosen by the designer, such as 5 ft (1.5 m) above the floor. Knowing the ceiling height and the calculated cone angle for a maximum 6 dB loss, the spacing of the loudspeakers can be calculated.

Note that the entire discussion and the calculations discussed above have not yet addressed what dB level is needed. The calculations for loudspeaker spacing have all been made to ensure no more than a 6 dB variation in sound level in the space using the on-axis level as the starting point. The design levels depend on the noise level in the space. The loudspeaker is selected so that the on-axis value and the off-axis value meet the system goals for signal-to-noise ratio. A common goal for voice systems is a 10 dB signal-to-noise ratio. However, Exhibit 1 shows that intelligibility is a balance of different factors.

In some spaces, a system that produces 10 dB over the ambient might produce sufficient reverberation to reduce intelligibility. It is possible to reduce the signal-to-noise ratio and increase intelligibility in some situations because of a net reduction in reverberation. An example

EXHIBIT 10

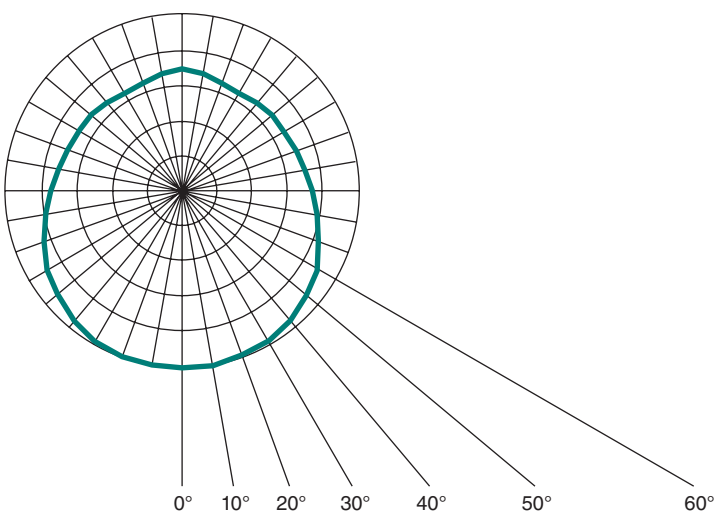

Angle off-axis (θ)	0°	10°	20°	30°	40°	50°	60°
Polar loss (1)	0.0 dB	0.0 dB	−0.1 dB	−0.5 dB	−1.3 dB	−1.8 dB	−3.0 dB
+ Distance loss (2)	0.0 dB	−0.1 dB	−0.5 dB	−1.2 dB	−2.3 dB	−3.8 dB	−6.0 dB
= Total loss	0.0 dB	−0.1 dB	−0.6 dB	−1.7 dB	−3.6 dB	−5.6 dB	−9.0 dB

−6 dB point	52°
Critical polar angle	104°

Notes:
(1) Polar loss interpreted from polar plot
(2) Distance loss calculated as 20*log(cos(θ))

Coverage Angle Calculation for a Ceiling-Mounted Loudspeaker. (Source: NEMA Standards Publication SB 50-2014, National Electrical Manufacturers Association, Rosslyn, VA)[22]

would be in a space with very low ambient noise and with surfaces that reflect most of the acoustic energy — stone floors, a marble wall on one side, and a glass exterior wall on the other side.

In a high-noise situation, a signal-to-noise ratio of +10 dB might require the loudspeakers to be driven at very high levels. Are the electronics of the system and the frequency response of the loudspeaker sufficient to operate at these levels without adding distortion and reducing intelligibility — the third leg of the triangle in Exhibit 1?

The design process can require several iterations because loudspeakers can be tapped at different wattages and because each model of loudspeaker will have a different polar plot and frequency response at different levels. Generic acoustic software programs can be used to model spaces and systems. Some manufacturers also have their own tools that designers can use. Just as fires can be modeled, acoustic and audio engineers can model speech intelligibility before a building is built and before a system is installed. Fortunately, acoustic and electronic properties are better documented and more accurately modeled than fire properties, resulting in reliable evaluations of proposed designs.

NFPA 72 permits designers to use any reasonable means to achieve the objectives. Designers and installers who want to learn more about proper system design and installation should consult other resources. In addition to the references cited at the end of this paper, there is a bibliography. As with fire alarms, trade organizations, such as the National Systems Contractors Association, provide training and support.[23] Training for system designers and installers is available from most manufacturers and from several private providers. Many colleges and universities, including community colleges, offer classes on audio system design and installation.

Testing speech intelligibility can be simple or complex, low cost or high cost. The least expensive dB meters meeting the requirements of Chapter 14 of *NFPA 72* (ANSI Type 2 meters are required) cost several hundred dollars. However, these meters do not diagnose why a system is not audible, nor prescribe how to fix it. For diagnostics, more expensive meters and systems are required, although most problems can be identified through careful analysis of the system. Fortunately, most audibility problems have solutions that are intuitive to most designers and installers.

Similarly, instrument-based intelligibility measuring systems vary in price range, as does the cost of subject-based testing. More complex measurement systems require considerable expertise, training, and setup but provide diagnostics at the same time. Handheld meters, on the order of a couple of thousand dollars, require only a little more training and care than a dB meter. In fact, the only difference in using an intelligibility meter compared to a simple sound level meter is that a button is pushed to start a measurement before waiting about 15 seconds for the results.

Annex D of *NFPA 72* describes a robust speech intelligibility test protocol. Relative to the cost of voice systems, handheld solutions for measuring speech intelligibility amortize to unit life-cycle costs similar to the costs of dB meters. In most situations, the installing contractor or the designated commissioning agent would be responsible for providing one or more meters. These tools are needed to perform the duties of this profession.

Exhibits 11 and 12 show handheld meters that can be used for both audibility measurements and for intelligibility measurements of the STI. See Table 1, Speech Intelligibility Test Methods. Handheld meters such as those shown in the two exhibits measure the STI using the STI for public address (STIPA) method, which requires that a special test signal be sent through the communications system. The STIPA test signal contains a sample of modulated voice frequencies that represent all the phonemes of human speech (see D.2.3.5 in *NFPA 72*). The meter measures how that test signal is changed as it goes through the communications path shown in Exhibit 2. Annex D describes how to conduct an STI test using the STIPA method. The test signal can be programmed into the system and played back. However, that method would not measure the impact of any distortion caused by the system microphone, if one is used.

EXHIBIT 11

Combination Sound Pressure Level Meter/Analyzer and Speech Intelligibility Meter. (Source: Gold Line, West Redding, CT)

EXHIBIT 12

XL2 Audio and Acoustic Analyzer Displaying Basic STI-PA Result. (Source: NTI Americas, Tigard, OR)

A more complete test uses a "talkbox," which is a device that combines an internal amplifier with a precision loudspeaker to simulate the way sound is produced by a human head. The test signal is played by the talkbox into the system microphone and through the system to the acoustic environment. The measuring microphone of the meter represents the recipient's ear. Exhibit 13 is an example of a talkbox for STIPA testing.

Even where intelligible speech is desired, measurement of speech intelligibility might not be necessary. However, where measurements are desired or recommended, how many tests should be made in a particular space? There is no guidance in *NFPA 72* for audibility measurements regarding the number and locations of test points. For intelligibility measurements, Annex D, subsection D.2.4, discusses the number and location of measurements and how the data should be compiled and averaged. The Fire Protection Research Foundation (FPRF) report that led to the development of Annex D of *NFPA 72* has more information and sample forms as well.[24]

EXHIBIT 13

STIPA NTI Talkbox Calibrated Acoustical Source. (Source: NTI Americas, Tigard, OR)

With audibility, the designer has an intuitive sense of where a system might fail and tends to concentrate the testing plan in those areas. How many designers, technicians, and authorities have such intuition regarding intelligibility? This is not an argument to not test for intelligibility. Rather, it means that testing needs to be performed and that a designer is likely to test a larger number of points initially as he or she gathers experience. For example, during the FPRF research that led to the development of Annex D, a series of tests was conducted in a mall. In one of the main mall areas, with lots of hard glass and tile surfaces and with a fountain contributing to background noise, the STIPA test signal was about 75 dBA — about 6–10 dB above ambient. Measurement results indicated poor intelligibility. In one of the individual stores, two of the participants subjectively evaluated the system and expected a low test score because the test signal sounded considerably lower in loudness. However, the measurement indicated that the system was adequate with an STI score of 0.50 to 0.60 in different areas. The fact that the store had carpet and lots of clothing to absorb reverberation made it sound less loud and also improved the intelligibility of the system.

As with audibility, there are methods to test when a space is not occupied and then "add in" the expected or measured noise level at a later time during analysis. This permits less invasive testing. For audibility, the background noise is measured while the space is occupied and in use. Then, at another time, the alarm signal is measured to determine the signal-to-noise ratio. For speech intelligibility, the instrument is used to measure and save the noise profile while the space is occupied and in use. Then, at another time, when not occupied, the speech test signal is measured and saved. Software provided by the meter manufacturer is used to combine the two data sets and get the resulting prediction of speech intelligibility. The protocol listed in Annex D addresses this type of testing. While this test sequence accounts for the effects of ambient noise, it does not account for the effect that a large number of people or furnishings might have on the reverberation in the space. For example, in some concert halls there can be a 30 percent reduction in reverberation time when the hall is full versus when there are no people present. Although people add noise, their effect on reverberation can improve overall intelligibility of a voice system.

After acceptance testing, should systems be tested periodically? Yes, but measurements might not be required.

NFPA 72 Table 14.4.3.2, item 22(2), for audible textual notification appliances (loudspeakers), requires an annual periodic test of the operation of the notification appliances. If there are changes to the building or the system — all factors that can affect intelligibility — additional testing might be warranted. However, if the system is classified as a mass notification system, Table 14.4.3.2, item 30(6), requires annual qualitative testing of message clarity and annual measurement with a meter of the alert or evacuation tone sound pressure level.

Although Annex D of *NFPA 72* has a recommended protocol for testing speech intelligibility, the body of the Code only requires a "listen" test. Designers, owners, and authorities having jurisdiction will have to decide when and where testing is desirable, if at all.

Although the sound pressure level of voice signals cannot be measured for comparison to tone signaling requirements, the sound pressure level of voice signals can be measured and recorded as a baseline to determine if a system or the building environment has changed significantly from initial testing. Changes in the sound pressure level of the voice message could point to possible changes in speech intelligibility. If baseline sound level measurements of voice messages are made, they should be made with an integrating, averaging meter — a capability that many sound level meters have and a capability that is required to measure average ambient sound pressure levels. The equivalent sound level over some period of time, L_{eq}, should be measured using the same text passage each time to make a valid comparison. For example, the L_{eq} for the period that a prerecorded voice message is played can be measured at several locations for future comparison. Combined with already required visual inspections of a space for changing conditions, measuring and documenting the L_{eq} may be adequate for periodic review of voice systems in some spaces.

In some situations, the best design is to use a combination system that is used for routine purposes on a daily basis, such as the sound system in an airport. Those systems are constantly being "tested" through their regular use.

CONCLUSION

The *National Fire Alarm and Signaling Code* — and common sense and fairness — require voice signals to be intelligible in many spaces. Modeling and measurement methods and standards for speech intelligibility are well researched and documented. The requirements in Chapter 18 of *NFPA 72* for the designation of ADSs will help the education process of those involved in the planning, design, installation, and testing of intelligible voice communications systems.

Researchers are investigating *what* should be said and *how* it should be said when giving information using a voice system. See *NFPA 72* Chapter 24, Emergency Communications Systems (ECS), and Annex G, Guidelines for Emergency Communication Strategies for Buildings and Campuses, for more information. The Code is not intended to be a design guide, textbook, and handbook. Those who plan, design, install, test, and approve voice systems for ECSs must seek information from established disciplines, groups, and literature — and by testing systems — to learn what works and what does not work.

REFERENCES

References Cited

1. *NFPA 72®, National Fire Alarm and Signaling Code®*, 2019 edition, National Fire Protection Association, Quincy, MA.
2. Proulx, G., "Is It Wise to Evacuate During a High Rise Fire?" National Fire Protection Association World Safety Congress, Denver, CO, May 2000.
3. Proulx, G., "Highrise Evacuation: A Questionable Concept," Second International Symposium on Human Behavior in Fire — Conference Proceedings, London: Interscience Communications, 2001.
4. Chandler, Robert C. *Emergency Notification*. Santa Barbara, CA: ABC-CLIO, LLC, 2010.
5. Proulx, G., and J. D. Sime, "To Prevent 'Panic' in an Underground Emergency: Why Not Tell People the Truth?" *Proceedings of the Third International Symposium on Fire Safety Science*, London: Elsevier, 1991.
6. Pauls, J. L., and B. K. Jones, "Building Evacuation: Research Methods and Case Studies," *Fires and Human Behaviour*, New York: John Wiley and Sons, 1980.
7. Kuligowski, E. D., S. M. V. Gwynne, K. M. Butler, B. L. Hoskins, and C. R. Sandler, "Developing Emergency Communication Strategies for Buildings and Campuses," Technical Note 1733, National Institute of Standards and Technology, March 2012.
8. ISO 9921-1, *Ergonomics-Assessment of Speech Communication*, International Standards Organization, Geneva, Switzerland, 2003.
9. Bronkhorst, Adelbert W. "The Cocktail Party Phenomenon: A Review of Research on Speech Intelligibility in Multiple-Talker Conditions." *Acustica* 86 (2000): 117–28.

10. ISO 7240-16, *Fire detection and alarm systems — Part 16: Sound system control and indicating equipment,* 2007. (This ISO standard replaces the 1998 IEC 60849, *Sound systems for emergency purposes*.)
11. Mannell, R. H., "Natural and Synthetic Speech Intelligibility and Quality Testing," Speech, Hearing and Language Research Centre (SHLRC), Macquarie University, Sydney, Australia, 1984.
12. Heyser, R. C., "Acoustical Measurements by Time Delay Spectrometry," *Journal of the Audio Engineering Society*, 1967.
13. Fletcher, H. and Munson, W. A. "Loudness, its definition, measurement and calculation," *Journal of the Acoustic Society of America,* 5, 82-108 (1933).
14. ISO 226, *Acoustics — Normal equal-loudness-level contours*, 2003.
15. ISO/TR 4870, *Acoustics — The construction and calibration of speech intelligibility tests*, International Standards Organization, Geneva, Switzerland, 1991.
16. IEC 60268-16, *Sound system equipment — Part 16: Objective rating of speech intelligibility by speech transmission index*, International Electrotechnical Commission, 3 rue de Varembé, P.O. Box 131, CH-1211 Geneva 20, Switzerland, 2011.
17. ANSI S3.5, *Methods for the Calculation of the Articulation Index*, American National Standards Institute, Inc., 25 West 43rd Street, 4th Floor, New York, NY 10036, 1969.
18. ANSI S3.5, *Methods for the Calculation of the Speech Intelligibility Index (SII)*. American National Standards Institute, Inc., 25 West 43rd Street, 4th Floor, New York, NY 10036, 1997.
19. Peutz, V. M. A., "*Articulation Loss of Consonants as a Criterion for Speech Transmission in a Room*," *Journal of the Audio Engineering Society*, 1971, 19(11):915–919.
20. ANSI S3.2, *Method for Measuring the Intelligibility of Speech Over Communication Systems*, American National Standards Institute, Inc., 25 West 43rd Street, 4th Floor, New York, NY 10036, 2009.
21. Barnett, P. W., and A. D. Knight, "The Common Intelligibility Scale," *Proceedings of the Institute of Acoustics*, AMS Acoustics, 43 Chase Side, Southgate, London, N14 SBP, 1995; 17(7).
22. NEMA Standards Publication SB 50-2014, *Emergency Communications Audio Intelligibility Applications Guide*, National Electrical Manufacturers Association, 1300 North 17th Street, Suite 900, Arlington, VA 22209.
23. National Systems Contractors Association, 625 First Street SE, Suite 420, Cedar Rapids, IA 52401.
24. Grant, C., *Intelligibility of Fire Alarm & Emergency Communication Systems*, the Fire Protection Research Foundation, Quincy, MA, 2008.

Selected Technical Bibliography

Ballou, G., ed., *Handbook for Sound Engineers*, The New Audio Cyclopedia, 2nd ed., Howard W. Sams, Indianapolis, IN: pp. 1277–1298.

Bell, T., "A New Measure of Word Recognition," *Sound & Video Contractor (S&VC)*, 1996; 14(11):28–33.

Chéenne, D. J., "Getting Testy about Intelligibility," *Sound & Video Contractor (S&VC)*, 1996; 14(11):22–26.

Davis, C., and D. Davis, "Speech Intelligibility Workshop," *Syn-Aud-Con Tech Topic*, 1986, 1987; 14(1):14(8).

Davis, C. P., "Measurement of $\%AL_{cons}$," *Journal of the Audio Engineering Society*, 1986; 34(11):905–909.

Davis, D., and C. Davis, "Sound System Engineering," 2nd ed., Cannel, IN: SAMS, a Division of Macmillan Computer Publishing, 1986.

Davis, D., and C. Davis, "Application of Speech Intelligibility to Sound Reinforcement," *Journal of the Audio Engineering Society*, 1989; 37(12).

Houtgast, T., and H. J. M. Steeneken, "A Multi-Lingual Evaluation of the RASTI-Method for Estimating Speech Intelligibility in Auditoria," *Acustica*, 1984; 54:185–199.

Houtgast, T., and H. J. M. Steeneken, "The Modulation Transfer Function in Room Acoustics as a Predictor of Speech Intelligibility," *Acustica*, 1973; 28:66–73.

Houtgast, T., H. J. M. Steeneken, and R. Plomp, "Predicting Speech Intelligibility in Rooms from the Modulation Transfer Function," *Acustica*, 1980; 46.

Howes, D., "On the Relation Between the Intelligibility and Frequency of Occurrence of English Words," *Journal of the Acoustical Society of America*, 1957; 29:296–305.

Hudgins, C. V., T. E. Hawkins, J. E. Karlin, and S. S. Stevens, "The Development of Recorded Auditory Tests for Measuring Hearing Loss for Speech," *Laryngoscope*, 1947; 57:57–89.

Klein, W., "Articulation Loss of Consonants as a Basis for Design and Judgment of Sound Reinforcement Systems," *Journal of the Audio Engineering Society*, 1971; 19(11):920–922.

Latham, H. G., "The Signal-to-Noise Ratio for Speech Intelligibility — an Auditorium Design Index," *Applied Acoustics*, 1979; 12.

Licklider, J. C. R., D. Bindra, and I. Pollack, "The Intelligibility of Rectangular Speech Waves," *American Journal of Psychology*, 1948; 61:1–20.

Lochner, J. P. A., and J. F. Burger, "The Intelligibility of Reinforced Speech," *Acustica*, 1959; 9.

Mapp, P., and P. Doany, "Speech Intelligibility Analysis and Measurement for a Distributed Sound System in a Reverberant Environment," Audio Engineering Society 87th Convention, NY, 1989.

Mapp, P., "An Issue of Safety," *Sound & Video Contractor (S&VC)*, 1996; 14(11):34–48.

Mapp, P., "Installation Profile — The National Ice Centre," *Sound & Video Contractor (S&VC)*, 1999; 18(14):77–84.

Mapp, P., *Reaching the Audience*, "Proven Techniques for Evaluating, Maintaining and Optimizing Systems Design for Speech Intelligibility," *Sound & Video Contractor (S&VC)*, 1999; 17(11):17–32.

Mapp, P., "Speaking of Speaking," *Sound & Video Contractor (S&VC)*, 2001; 19(10):36–48.

Marshall, A. H., "Acoustical Determinants for the Architectural Design of Concert Halls," *Architectural Science Review*, 1968; 11:81–87.

Peutz, V. M. A., and B. M. Kok, "Speech Intelligibility," Audio Engineering Society 75th Convention, Paris, France, 1984.

Peutz, V. M. A., "Articulation Loss of Consonants as a Criterion for Speech Transmission in a Room," *Journal of the Audio Engineering Society*, 1971; 19(11):915–919.

Peutz, V. M. A., "Speech Information and Speech Intelligibility," Audio Engineering Society 85th Convention, Los Angeles, CA 1988.

Pratt, P., "Intelligibility and International Standards," *Sound & Video Contractor (S&VC)*, 1996; 14(11): 49–54.

Rosenzweig, M. R., and L. Postman, "Intelligibility as a Function of Frequency of Usage," *Journal of Experimental Psychology*, 1957; 54:412–422.

Spieth, W., J. F. Curtis, and J. C. Lebster, "Responding to One of Two Simultaneous Messages," *Journal of the Acoustical Society of America*, 1954; 26: 391–396.

Steeneken, H. J. M., "The Measurement of Speech Intelligibility," 2002.

Steeneken, H. J. M., and T. Houtgast, 1980. "A Physical Method for Measuring Speech Transmission Quality." *J. Acoustical Society of America*, 1980; 67(31): 318–326.

Steeneken, H. J. M., and T. Houtgast, "On the Mutual Dependence of Octave Band Contributions to Speech Intelligibility." Proc. Eurospeech 91, Genoa, 1991; 1133–1136.

Steeneken, H. J. M., and T. Houtgast, "Some Applications of the Speech Transmission Index (STI) in Auditoria," *Acustica*, 1982; 51:229–234.

Steeneken, H. J. M., and J. Houtgast, "RASTI. A Tool for Evaluating Auditorium," *B&K Technical Review*, 1989; 3.

Stiernberg, J., "The Science of Perception and Reception," *Sound & Video Contractor (S&VC)*, 1996; 14(11): 14–20, 92.

Treisman, A. M., "Verbal Cues, Language, and Meaning in Relative Attention," *American Journal of Psychology*, 1964; 77:206–219.

Sample Ordinance Adopting *NFPA 72*

ANNEX

E

This annex is not a part of the requirements of this NFPA document but is included for informational purposes only.

E.1

The following sample ordinance is provided to assist a jurisdiction in the adoption of this Code and is not part of this Code.

ORDINANCE NO. _____

An ordinance of the *[jurisdiction]* adopting the 2019 edition of *NFPA 72*, *National Fire Alarm and Signaling Code*, and documents listed in Chapter 2 of that Code; prescribing regulations governing conditions hazardous to life and property from fire or explosion; providing for the issuance of permits and collection of fees; repealing Ordinance No. _____ of the *[jurisdiction]* and all other ordinances and parts of ordinances in conflict therewith; providing a penalty; providing a severability clause; and providing for publication; and providing an effective date.

BE IT ORDAINED BY THE *[governing body]* OF THE *[jurisdiction]*:

SECTION 1 That the *NFPA 72*, *National Fire Alarm and Signaling Code*, and documents adopted by Chapter 2, three (3) copies of which are on file and are open to inspection by the public in the office of the *[jurisdiction's keeper of records]* of the *[jurisdiction]*, are hereby adopted and incorporated into this ordinance as fully as if set out at length herein, and from the date on which this ordinance shall take effect, the provisions thereof shall be controlling within the limits of the *[jurisdiction]*. The same are hereby adopted as the Code of the *[jurisdiction]* for the purpose of prescribing regulations governing conditions hazardous to life and property from fire or explosion and providing for issuance of permits and collection of fees.

SECTION 2 Any person who shall violate any provision of this code or standard hereby adopted or fail to comply therewith; or who shall violate or fail to comply with any order made thereunder; or who shall build in violation of any detailed statement of specifications or plans submitted and approved thereunder; or fail to operate in accordance with any certificate or permit issued thereunder; and from which no appeal has been taken; or who shall fail to comply with such an order as affirmed or modified by a court of competent jurisdiction, within the time fixed herein, shall severally for each and every such violation and noncompliance, respectively, be guilty of a misdemeanor, punishable by a fine of not less than $ _____ nor more than $_____ or by imprisonment for not less than _____ days nor more than _____ days or by both such fine and imprisonment. The imposition of one penalty for any violation shall not excuse the violation or permit it to continue; and all such persons shall be required to correct or remedy such violations or defects within a reasonable time; and when not otherwise specified the application of the above penalty shall not be held to prevent the enforced removal of prohibited conditions. Each day that prohibited conditions are maintained shall constitute a separate offense.

SECTION 3 Additions, insertions, and changes — that the 2019 edition of *NFPA 72*, *National Fire Alarm and Signaling Code*, is amended and changed in the following respects:

List Amendments

SECTION 4 That ordinance No. _____ of *[jurisdiction]* entitled *[fill in the title of the ordinance or ordinances in effect at the present time]* and all other ordinances or parts of ordinances in conflict herewith are hereby repealed.

SECTION 5 That if any section, subsection, sentence, clause, or phrase of this ordinance is, for any reason, held to be invalid or unconstitutional, such decision shall not affect the validity or constitutionality of the remaining portions of this ordinance. The *[governing body]* hereby declares that it would have passed this ordinance, and each section, subsection, clause, or phrase hereof, irrespective of the fact that any one or more sections, subsections, sentences, clauses, and phrases be declared unconstitutional.

SECTION 6 That the *[jurisdiction's keeper of records]* is hereby ordered and directed to cause this ordinance to be published.

[NOTE: An additional provision may be required to direct the number of times the ordinance is to be published and to specify that it is to be in a newspaper in general circulation. Posting may also be required.]

SECTION 7 That this ordinance and the rules, regulations, provisions, requirements, orders, and matters established and adopted hereby shall take effect and be in full force and effect *[time period]* from and after the date of its final passage and adoption.

Wiring Diagrams and Guide for Testing Fire Alarm Circuits

ANNEX

F

This annex is not a part of the requirements of this NFPA document but is included for informational purposes only.

Annex F provides guidance for testing of the various classes of circuits identified in Chapter 12 of this edition of NFPA 72. Earlier editions of NFPA 72 have used different designations for these circuits. Designations found in previous editions (located in Annex C of NFPA 72, 2007 edition or earlier) can be compared with these corresponding diagrams.

The circuit styles and classes specified in the 2002 and earlier editions of the Code were revised substantially in the 2007 edition. Since the 2010 edition, the designations for pathways (circuits) have been by class and survivability level. When testing an existing installation, it is important to know the designations and requirements in effect when the system was installed.

F.1 General.

Circuit class designations in this edition of the Code are Class A, B, C, D, E, N, and X. Definitions can be found in Chapter 12. Additionally, special circuits unique to supervising stations are designated as Types 4, 5, 6, and 7, and definitions can be found in Chapter 26.

The wiring diagrams depicted in Figure F.2.1.1 through Figure F.3.14(k) are representative of typical circuits encountered in the field and are not intended to be all-inclusive.

The noted symbols are as indicated in NFPA 170.

An individual point-identifying (i.e., addressable) fire alarm initiating device operates on a signaling line circuit and is designated as a Class A, Class B, or Class X initiating device circuit. All fire alarm circuits must test free of grounds because metallic conductors will cause failure of the circuit when a second ground condition occurs on the same power source.

Nonmetallic circuit paths, such as wireless and fiber-optic, might still be designated as Class A, B, or X if they meet the other performance requirements of those pathways.

The following initiating device circuits are illustrative of either alarm or supervisory signaling. Alarm-initiating devices and supervisory initiating devices are not permitted to have identical annunciation at the fire alarm control unit.

Directly connected system smoke detectors, commonly referred to as two-wire detectors, should be listed as being electrically and functionally compatible with the fire alarm control unit and the specific subunit or module to which they are connected. If the detectors and the units or modules are not compatible, it is possible that, during an alarm condition, the detector's visible indicator will illuminate, but no change of state to the alarm condition will occur at the fire alarm control unit. Incompatibility can also prevent proper system operation at extremes of operating voltage, temperature, and other environmental conditions.

Where two or more two-wire detectors with integral relays are connected to a single initiating device circuit, and their relay contacts are used to control essential building functions (e.g., fan shutdown, elevator recall), it should be clearly noted that the circuit might be capable of supplying only enough energy to support one detector/relay combination in an alarm mode.

If control of more than one building function is required, each detector/relay combination used to control separate functions should be connected to separate initiating device circuits, or they should be connected to an initiating device circuit that provides adequate power to allow all the detectors connected to the circuit to be in the alarm mode simultaneously. During acceptance and reacceptance testing, this feature should always be tested and verified.

A loudspeaker is an alarm notification appliance, and, if used as shown in the diagrams in Section F.2, the principle of operation and supervision is the same as for other audible alarm notification appliances (e.g., bells and horns).

The testing of supervised remote relays is to be conducted in the same manner as for notification appliances.

F.2 Wiring Diagrams and Testing.

When testing circuits, the correct wiring size, insulation type, and conductor fill should be verified in accordance with the requirements of *NFPA 70*.

F.2.1 Testing Nonpowered, Hard-Wired Class A, B, or C Initiating Device Circuits. Disconnect conductor at device or control unit, then reconnect. Temporarily connect a ground to either leg of conductors, then remove ground. Both operations should indicate audible and visual trouble with subsequent restoration at control unit.

F.2.1.1 Hard-Wired Alarm Initiating or Supervisory Initiating Devices. Hard-wired alarm initiating devices (e.g., manual station or valve supervisory switch), by their intended function, initiate alarm upon a conductor-to-conductor short. See Figure F.2.1.1.

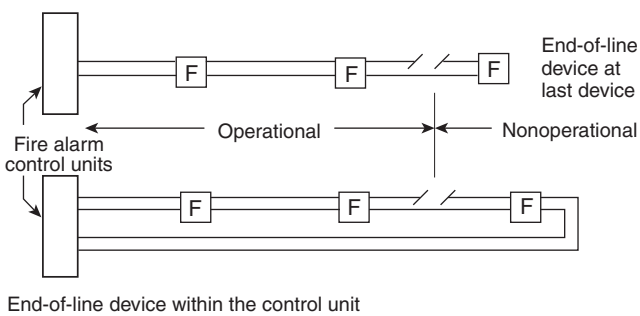

FIGURE F.2.1.1 *Nonpowered Alarm Initiating or Supervisory Initiating Devices Connected to Hard-Wired and Class B Initiating Device Circuits.*

F.2.2 Nonpowered Class A Circuits. Disconnect a conductor at a device at midpoint in the circuit. Operate a device on either side of the device with the disconnected conductor. Reset fire alarm control unit and reconnect conductor. Repeat test with a ground applied to either conductor in place of the disconnected conductor. Both operations should indicate audible and visual trouble, then alarm or supervisory indication with subsequent restoration.

F.2.3 Circuit-Powered (Two-Wire) Smoke Detectors for Class A or B Initiating Device Circuits. Remove smoke detector where installed with plug-in base or disconnect conductor from fire alarm control unit beyond first device. Actuate smoke detector per manufacturer's published instructions between fire alarm control unit and circuit break. Restore detector or circuit, or both. Fire alarm control unit should indicate trouble when fault occurs and alarm when detectors are actuated between the break and the fire alarm control unit. See Figure F.2.3.

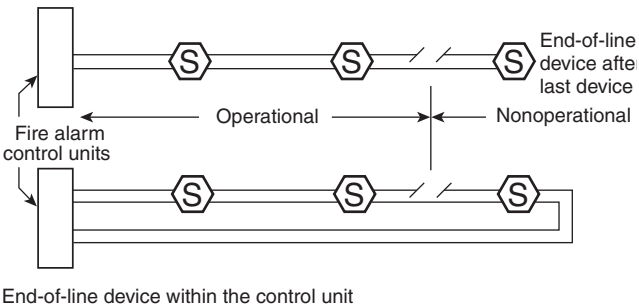

Δ ***FIGURE F.2.3*** *Circuit-Powered (Two-Wire) Smoke Detectors for Class A or B Initiating Device Circuits.*

F.2.4 Circuit-Powered (Two-Wire) Smoke Detectors for Class A Initiating Device Circuits. Disconnect conductor at a smoke detector or remove where installed with a plug-in base at midpoint in the circuit. Operate a device on either side of the device with the fault. Reset control unit and reconnect conductor or detector. Repeat test with a ground applied to either conductor in place of the disconnected conductor or removed device. Both operations should indicate audible and visual trouble, then alarm indication with subsequent restoration. See Figure F.2.4.

F.2.5 Combination Alarm Initiating Device and Notification Appliance Circuits. Disconnect a conductor either at indicating or initiating device. Actuate initiating device between the fault and the fire alarm control unit. Actuate additional smoke detectors between the device first actuated and the fire alarm control unit. Restore circuit, initiating devices, and fire alarm control unit. Confirm that all notification appliances on the circuit operate from the fire alarm control unit up to the fault and that all smoke detectors tested and their associated ancillary functions, if any, operate. See Figure F.2.5.

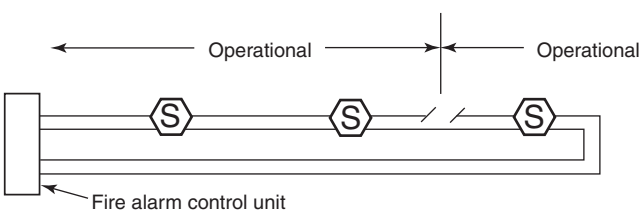

FIGURE F.2.4 *Circuit-Powered (Two-Wire) Smoke Detectors for Class A Initiating Device Circuits.*

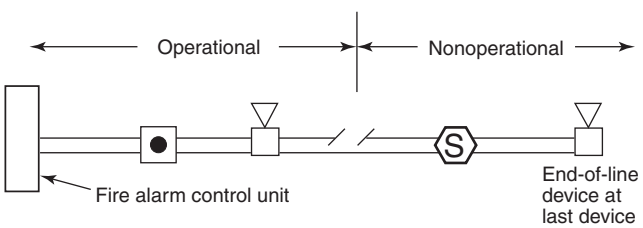

FIGURE F.2.5 *Combination Alarm Initiating Device and Notification Appliance Circuits.*

F.2.6 Combination Alarm Initiating Device and Notification Appliance Circuits Arranged for Operation with Single Open or Ground Fault. Testing of the circuit is similar to that described in F.2.5. Confirm that all notification appliances operate on either side of fault. See Figure F.2.6.

F.2.7 Class A or B Circuits with Four-Wire Smoke Detectors and End-of-Line Power Supervision Relay. Testing of the circuit is similar to that described in F.2.3 and F.2.4. Disconnect a leg of the power supply circuit beyond the first device on the circuit. Actuate initiating device between the fault and the fire alarm control unit. Restore circuits, initiating devices, and fire alarm control unit. Audible and visual trouble should indicate at the fire alarm control unit where either the initiating or power circuit is faulted. All initiating

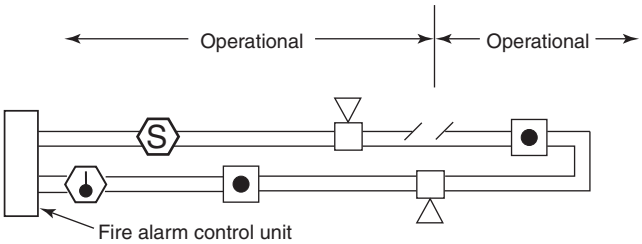

FIGURE F.2.6 Combination Alarm Initiating Device and Notification Appliance Circuits Arranged for Operation with Single Open or Ground Fault.

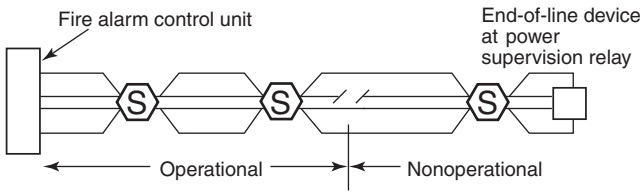

FIGURE F.2.7 Class B Circuits with Four-Wire Smoke Detectors and End-of-Line Power Supervision Relay.

devices between the circuit fault and the fire alarm control unit should actuate. In addition, removal of a smoke detector from a plug-in-type base can also break the power supply circuit. Where circuits contain various powered and nonpowered devices on the same initiating circuit, verify that the nonpowered devices beyond the power circuit fault can still initiate an alarm. A return loop should be brought back to the last powered device and the power supervisory relay to incorporate into the end-of-line device. See Figure F.2.7.

F.2.8 Class B Initiating Device Circuits with Four-Wire Smoke Detectors That Include Integral Individual Supervision Relays. Testing of the circuit is similar to that described in F.2.3 with the addition of a power circuit. See Figure F.2.8.

F.2.9 Alarm Notification Appliances Connected Class B (Two-Wire) Circuits. Testing of the notification appliances connected as Class B is similar to that described in F.2.3. See Figure F.2.9.

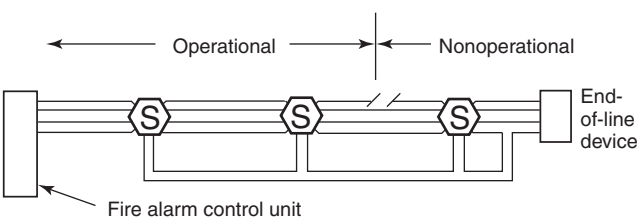

FIGURE F.2.8 Class B Initiating Device Circuits with Four-Wire Smoke Detectors That Include Integral Individual Supervision Relays.

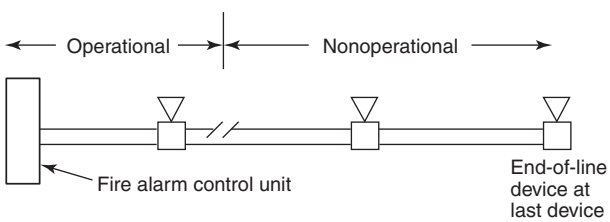

FIGURE F.2.9 Alarm Notification Appliances Connected to Class B (Two-Wire) Circuits.

F.2.10 Alarm Notification Appliances Connected to Class A (Four-Wire) Circuits. Testing of the notification appliances connected as Class A is similar to that described in F.2.4. See Figure F.2.10.

F.2.11 System with Supervised Audible Notification Appliance Circuit and Unsupervised Visual Notification Appliance Circuit. Testing of the notification appliances connected to Class B is similar to that described in F.2.4. See Figure F.2.11.

F.2.12 System with Supervised Audible and Visual Notification Appliance Circuits. Testing of the notification appliances connected to Class B is similar to that described in F.2.4. See Figure F.2.12.

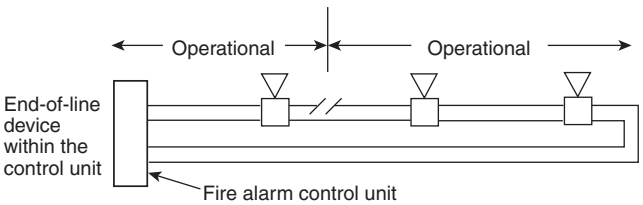

FIGURE F.2.10 *Alarm Notification Appliances Connected to Class A (Four-Wire) Circuits.*

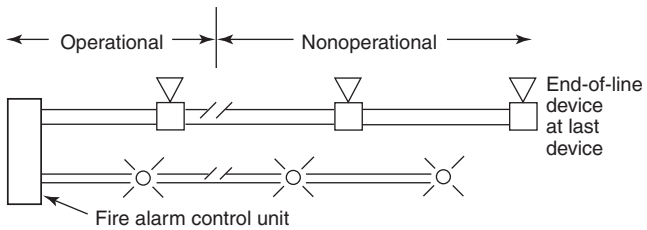

FIGURE F.2.11 *Supervised Audible Notification Appliance Circuit and Unsupervised Visual Notification Appliance Circuit.*

F.2.13 Series Notification Appliance Circuit That No Longer Meets Requirements of *NFPA 72*. An open fault in the circuit wiring should cause a trouble condition. See Figure F.2.13.

F.2.14 Supervised Series Supervisory Initiating Circuit with Sprinkler Supervisory Valve Switches Connected That No Longer Meets Requirements of *NFPA 72*. An open fault in the circuit wiring or operation of the valve switch (or any supervisory signal device) should cause a trouble condition. The classification of this circuit is now designated as Class D because the intended operation is performed. When the circuit fails, the indication at the fire control unit is the same as if the supervisory switch were to open. Fire alarm initiating devices, including supervisory inputs, are no longer allowed to annunciate as trouble conditions. See Figure F.2.14.

F.2.15 Initiating Device Circuit with Parallel Waterflow Alarm Switches and Series Supervisory Valve Switch That No Longer Meets Requirements of *NFPA 72*. An open fault in the circuit wiring or operation of the valve switch should cause a trouble signal. See Figure F.2.15.

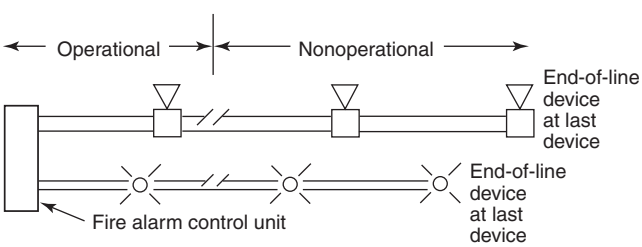

FIGURE F.2.12 *Supervised Audible and Visual Notification Appliance Circuits.*

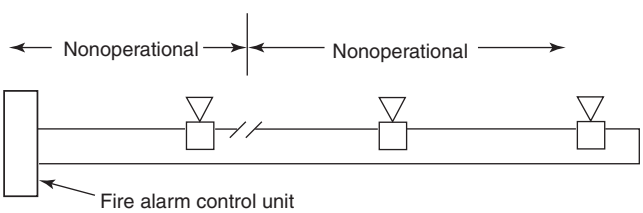

FIGURE F.2.13 *Series Notification Appliance Circuit.*

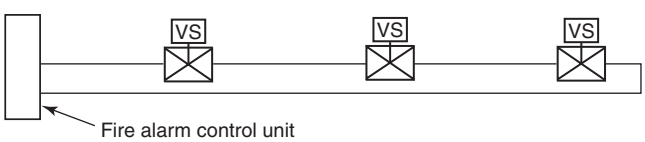

FIGURE F.2.14 *Supervised Series Supervisory Initiating Circuit with Sprinkler Supervisory Valve Switches Connected.*

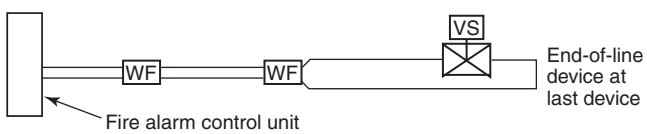

FIGURE F.2.15 *Initiating Device Circuit with Parallel Waterflow Alarm Switches and Series Supervisory Valve Switch.*

F.2.16 System Connected to Municipal Fire Alarm Master Box Circuit. Disconnect a leg of municipal circuit at master box. Verify alarm sent to public communications center. Disconnect leg of auxiliary circuit. Verify trouble condition on control unit. Restore circuits. Actuate control unit and send alarm signal to communications center. Verify control unit in trouble condition until master box reset. See Figure F.2.16.

F.2.17 Auxiliary Circuit Connected to Municipal Fire Alarm Master Box. For operation with a master box, an open or ground fault (where ground detection is provided) on the circuit should result in a trouble condition at the fire alarm control unit. A trouble signal at the fire alarm control unit should persist until the master box is reset. For operation with a shunt trip master box, an open fault in the auxiliary circuit should cause an alarm on the municipal system. See Figure F.2.17.

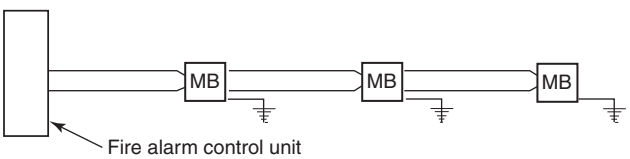

FIGURE F.2.16 *System Connected to Municipal Fire Alarm Master Box Circuit.*

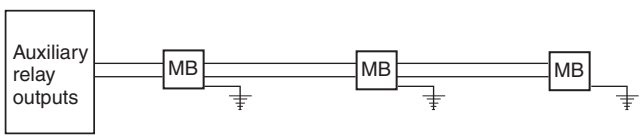

FIGURE F.2.17 *Auxiliary Circuit Connected to Municipal Fire Alarm Master Box.*

F.3 Circuit Classes.

Some testing laboratories and authorities having jurisdiction permitted systems to be classified as Class X by the application of two circuits operating in tandem. An example of this is to take two series circuits, Class B, and operate them in tandem. The logic was that if a condition occurs on one of the circuits, the other series circuit remained operative.

To understand the principles of the circuit, alarm receipt capability should be performed on a single circuit, and the Class type, based on the performance, should be indicated on the record of completion.

F.3.1 Style 0.5. This signaling circuit operates as a series circuit in performance. This is identical to the historical series audible signaling circuits. Any type of break or ground in one of the conductors, or the internal of the multiple interface device, and the total circuit is rendered inoperative.

To test and verify this type of circuit, either a conductor should be lifted or an earth ground should be placed on a conductor or a terminal point where the signaling circuit attaches to the multiplex interface device.

F.3.2 Style 0.5(a) (Class B) Series That No Longer Meets Requirements of *NFPA 72*. Style 0.5(a) functions so that, when a box is operated, the supervisory contacts open, making the succeeding devices nonoperative while the operating box sends a coded signal. Any alarms occurring in any successive devices will not be received at the receiving station during this period. See Figure F.3.2.

F.3.3 Style 0.5(b) Shunt That No Longer Meets Requirements of *NFPA 72*. The contact closures when the device is operated (and remains closed) to shunt out the remainder of the system until the code is complete. See Figure F.3.3.

F.3.4 Style 0.5(c) Positive Supervised Successive That No Longer Meets Requirements of *NFPA 72*. An open or ground fault on the circuit should cause a trouble condition at the control unit. See Figure F.3.4.

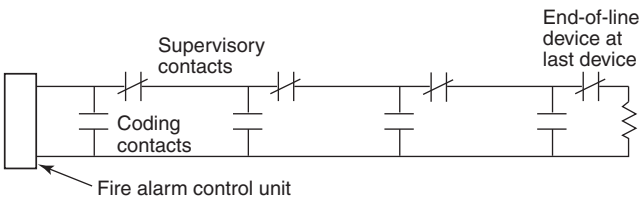

FIGURE F.3.2 *Style 0.5(a) Series.*

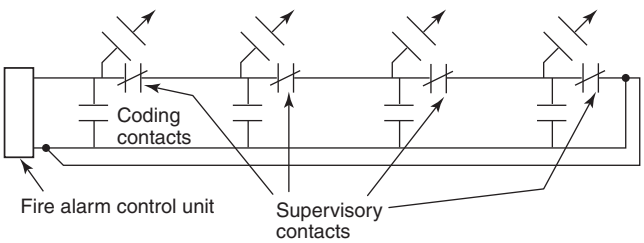

FIGURE F.3.3 *Style 0.5(b) Shunt.*

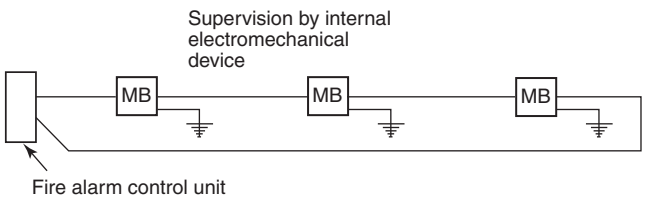

FIGURE F.3.4 *Style 0.5(c) Positive Supervised Successive.*

F.3.5 Style 1.0 That No Longer Meets Requirements of *NFPA 72*. This is a series circuit identical to the diagram for Style 0.5, except that the fire alarm system hardware has enhanced performance. *[See Figure F.3.5(a) and Figure F.3.5(b).]* A single earth ground can be placed on a conductor or multiplex interface device, and the circuit and hardware will still have alarm operability.

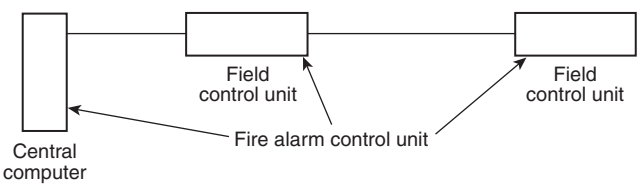

FIGURE F.3.5(a) *Style 1.0 (Class B).*

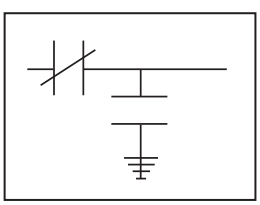

FIGURE F.3.5(b) *Typical Transmitter Layout.*

If a conductor break or an internal fault occurs in the pathway of the circuit conductors, the entire circuit becomes inoperative.

To verify alarm receipt capability and the resulting trouble signal, place an earth ground on one of the conductors or at the point where the signaling circuit attaches to the multiplex interface device. One of the transmitters or an initiating device should then be placed into alarm.

F.3.6 Typical McCulloh Loop. This is the central station McCulloh redundant-type circuit and has alarm receipt capability on either side of a single break. See Figure F.3.6.

F.3.6.1 To test, lift one of the conductors and operate a transmitter or initiating device on each side of the break. This activity should be repeated for each conductor.

F.3.6.2 Place an earth ground on a conductor and operate a single transmitter or initiating device to verify alarm receipt capability and trouble condition for each conductor.

F.3.6.3 Repeat the instructions of F.3.6.1 and F.3.6.2 at the same time, verify alarm receipt capability, and verify that a trouble condition results.

F.3.7 Class B (Formerly Style 3.0). This is a parallel circuit in which multiplex interface devices transmit signal and operating power over the same conductors. *(See Figure F.3.7.)* The multiplex interface devices might be operable up to the point of a single break. Verify by lifting a conductor and causing an alarm condition on one of the units between the central alarm unit and the break. Either lift a conductor to verify the trouble condition or place an earth ground on the conductors. Test for all the valuations shown on the signaling table.

On ground-fault testing, verify alarm receipt capability by actuating a multiplex interface initiating device or a transmitter.

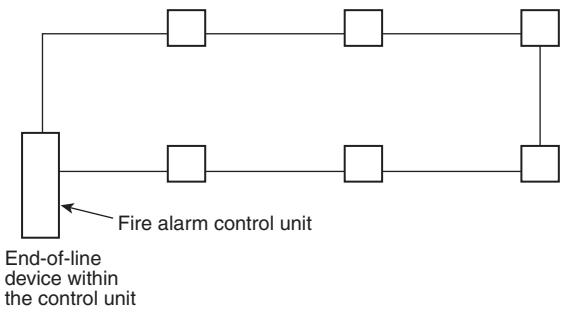

FIGURE F.3.6 *Typical McCulloh Loop.*

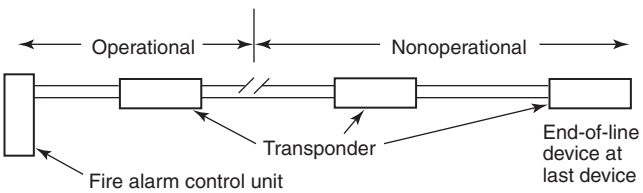

FIGURE F.3.7 *Class B (Formerly Style 3.0).*

F.3.8 Style 3.5 That No Longer Meets Requirements of *NFPA 72*. Follow the instructions for Class B (formerly Style 3.0) and verify the trouble conditions by either lifting a conductor or placing a ground on the conductor. See Figure F.3.8.

F.3.9 Class B (Formerly Style 4.0). Follow the instructions for Class B (formerly Style 3.0) and include a loss of carrier where the signal is being used. See Figure F.3.9.

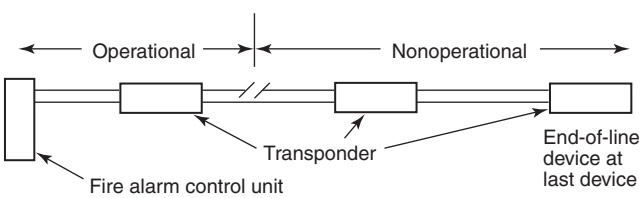

FIGURE F.3.8 *Style 3.5.*

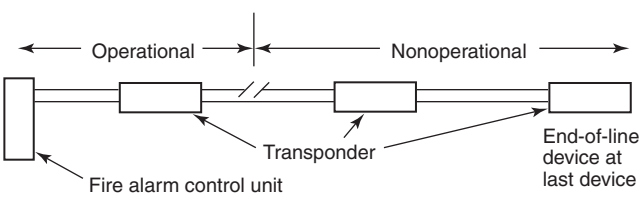

FIGURE F.3.9 *Class B (Formerly Style 4.0).*

F.3.10 Style 4.5 That No Longer Meets Requirements of *NFPA 72*. Follow the instructions for Style 3.5. Verify alarm receipt capability while lifting a conductor by actuating a multiple interface device or transmitter on each side of the break. See Figure F.3.10.

F.3.11 Class A (Formerly Style 5.0). Verify the alarm receipt capability and trouble annunciation by lifting a conductor and actuating a multiplex interfacing device or a transmitter on each side of the break.

F.3.11.1 Ground Test on Class A (Formerly Style 5.0) Circuit. For the earth ground verification, place an earth ground and certify alarm receipt capability and trouble annunciation by actuating a single multiplex interfacing device or a transmitter. See Figure F.3.11.1.

F.3.12 Class A (Formerly Style 6.0). Follow the instructions from F.3.11. Verify the trouble annunciation for the various combinations. See Figure F.3.12.

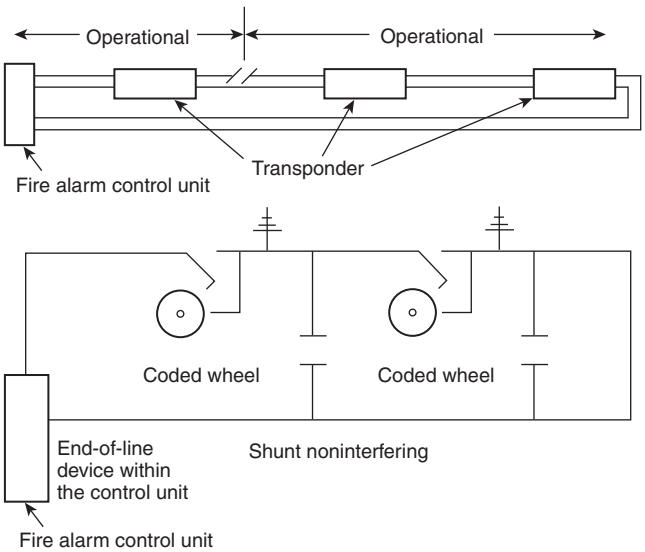

FIGURE F.3.10 Style 4.5 (Class B).

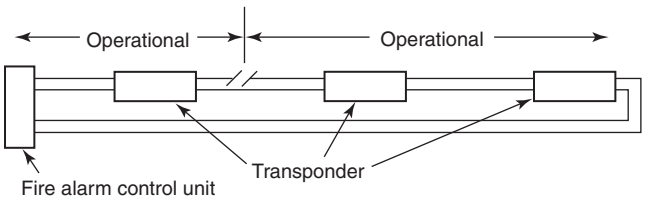

FIGURE F.3.11.1 Class A (Formerly Style 5.0). N

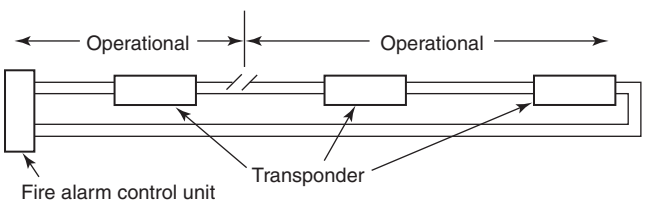

FIGURE F.3.12 Style 6.0 (Class A).

F.3.13 Class A with Circuit Isolators. For the portions of the circuits electrically located between the monitoring points of circuit isolators, follow the instructions for a Class X circuit. It should be clearly noted that the alarm receipt capability for remaining portions of the circuit protection isolators is not the capability of the entire circuit but is permitted with enhanced system capabilities. See Figure F.3.13.

F.3.14 Class X (Formerly Style 7.0). Follow the instructions for testing of Class A (formerly Style 6.0) for alarm receipt capability and trouble annunciation. See Figure F.3.14(a) through Figure F.3.14(k).

NOTE: Some manufacturers of this type of equipment have isolators as part of the base assembly. Therefore, in the field, this component might not be readily observable without the assistance of the manufacturer's representative.

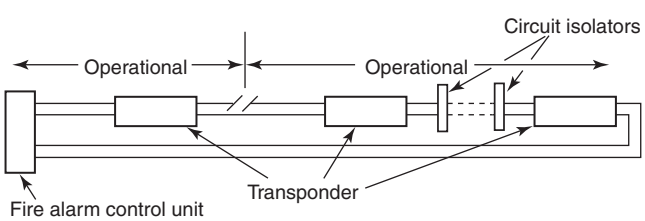

FIGURE F.3.13 Class A with Circuit Isolators.

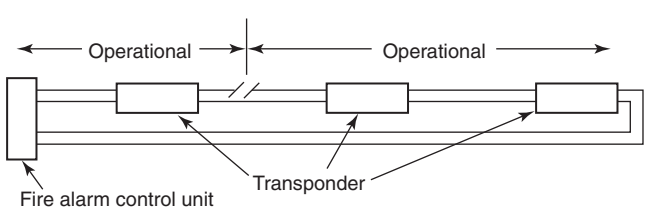

FIGURE F.3.14(a) Class X (Formerly Style 7.0).

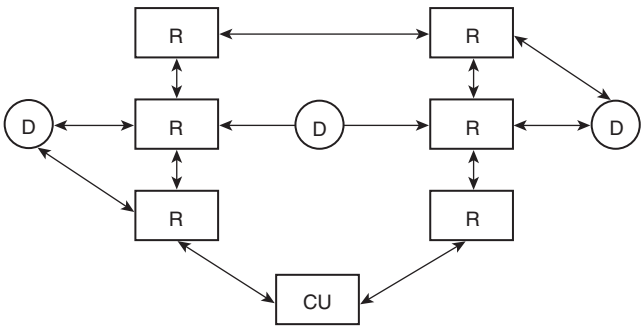

CU = Wireless control unit
(with power supply and standby power)
R = Wireless repeater
(with power supply and standby power)
D = Wireless initiating, indicating, and control device
(either primary battery or primary standby battery)

FIGURE F.3.14(b) *Low-Power Radio (Wireless) Fire Alarm System.*

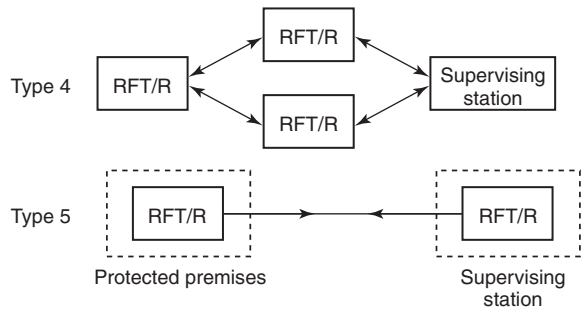

RFT/R = Radio frequency transmitter/receiver

FIGURE F.3.14(c) *Two-Way RF Multiplex Systems.*

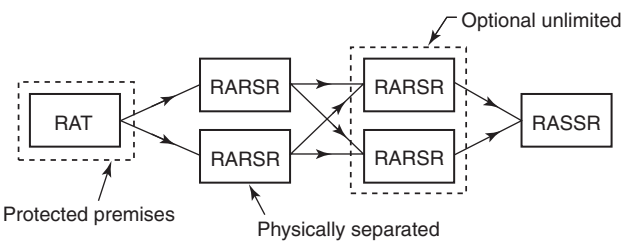

RAT = Radio alarm transmitter
RARSR = Radio alarm repeater station receiver
RASSR = Radio alarm supervising station receiver

FIGURE F.3.14(d) *One-Way Radio Alarm System.*

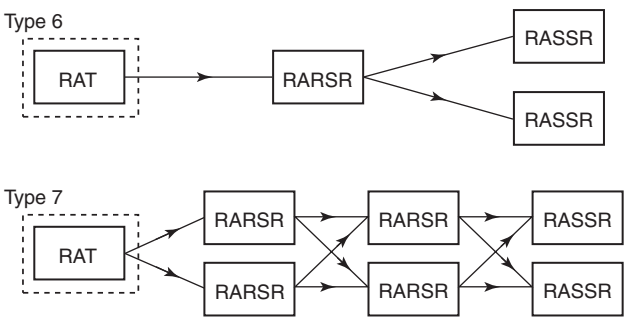

RAT = Radio alarm transmitter
RARSR = Radio alarm repeater station receiver
RASSR = Radio alarm supervising station receiver

FIGURE F.3.14(e) *One-Way Radio Alarm System (Type 6 and Type 7).*

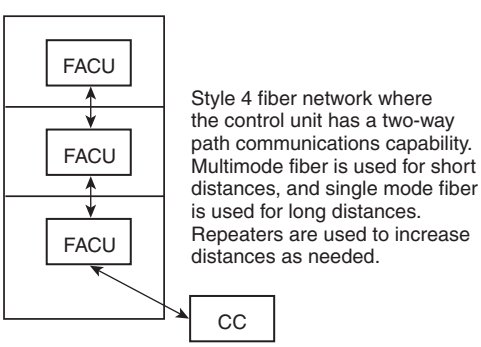

Style 4 fiber network where the control unit has a two-way path communications capability. Multimode fiber is used for short distances, and single mode fiber is used for long distances. Repeaters are used to increase distances as needed.

CC = Control center
FACU = Fire alarm control unit

FIGURE F.3.14(f) *Style 4 Fiber Network.*

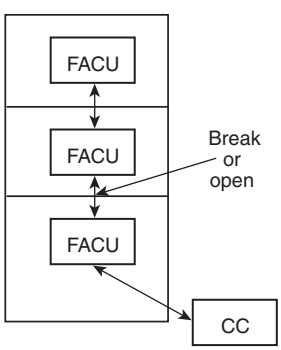

Style 4 fiber network where the control unit has a two-way path communications capability. A single break separates the system into two LANs, both with Style 4 capabilities.

CC = Control center
FACU = Fire alarm control unit

FIGURE F.3.14(g) *Style 4 Fiber Network (Single Break).*

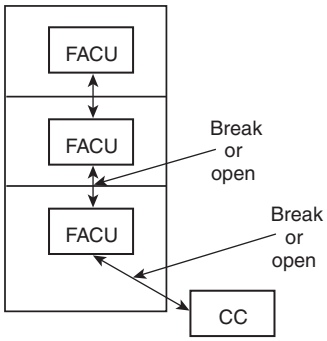

Style 4 fiber network where the control unit has a two-way path communications capability. A double break isolates the control units and the control center in this case. There is one LAN and one isolated control unit operating on its own. Control center is isolated completely with no communications with the network.

CC = Control center
FACU = Fire alarm control unit

FIGURE F.3.14(h) *Style 4 Fiber Network (Double Break).*

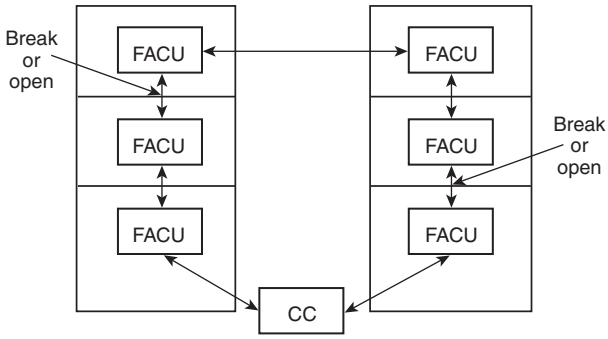

Style 7 fiber network where the control unit has a two-way path communications capability with the two breaks now breaking into two LANs, both functioning as independent networks with the same Style 7 capabilities.

CC = Control center
FACU = Fire alarm control unit

FIGURE F.3.14(i) *Style 7 Fiber Network (Two LANs).*

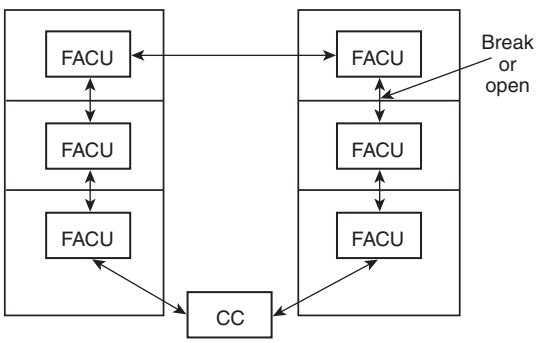

Style 7 fiber network where the control unit has a two-way path communications capability, with one break. System remains as one LAN and meets Style 7.

CC = Control center
FACU = Fire alarm control unit

FIGURE F.3.14(j) *Style 7 Fiber Network (One LAN).*

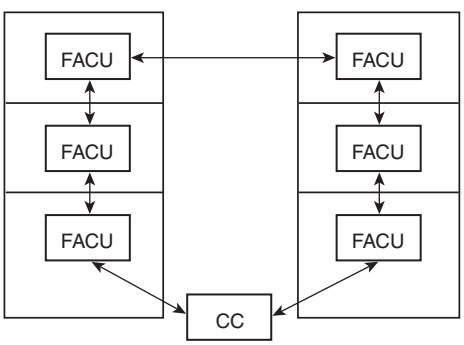

Style 7 fiber network where the control unit has a two-way path communications capability.

CC = Control center
FACU = Fire alarm control unit

FIGURE F.3.14(k) *Style 7 Fiber Network.*

Guidelines for Emergency Communication Strategies for Buildings and Campuses

ANNEX

G

This annex is not part of the requirements of this NFPA document but is included for informational purposes only.

The sound of a bell or the light from a visual appliance might not generate the desired action of people during an emergency. Individuals may not know the meaning of the alarm or may respond inappropriately. Emergency communications systems can deliver necessary information to occupants to effect an appropriate response. However, there has been a lack of guidance on how to effectively use an emergency communications system. This annex provides direction on how to create and disseminate messages using basic audible and/or visual technology in order to produce an effective and safe response during an emergency.

G.1

The material in this annex is based on the National Institute of Standards and Technology (NIST) and Fire Protection Research Foundation research *Guidance Document: Emergency Communication Strategies for Buildings*, by Erica Kuligowski, Ph.D. and H. Omori, 2014, as adapted by the NFPA ECS TC.

The purpose of this annex is to provide guidance to system designers, building managers, and/or building emergency personnel responsible for emergency communication on how to create and disseminate messages using basic communication modes (audible and/or visual technology). The guidance provided here is taken directly from a report published by the National Institute of Standards and Technology, which was based on a review of 162 literature sources from a variety of social science and engineering disciplines (Kuligowski et al. 2012) and the prioritization of the specific findings extracted from each literature source.

This document first presents guidance on how to create and disseminate emergency information in the face of rapid-onset disasters[1] — providing guidance on the dissemination of alert signals, the creation of the warning message, the formatting of messages for both visual and audible means, and the dissemination of the warning message. This document then provides examples of emergency messages (i.e., message templates) for five different types of emergency scenarios. These message templates can be altered to fit the needs of your occupants, as well as the type of emergency that has occurred and type of technology used to disseminate the alerts/messages.

G.2 Guidance on Emergency Communication Strategies.

This section provides guidance for managers, emergency personnel, alarm system manufacturers, codes/standards committees, or others responsible for emergency communication on the ways in which alerts and warning messages should be created, formatted, and disseminated.

The guidance is divided into two main parts: guidance on alerts and guidance on warning messages. Although these two parts often get confused, it is important to distinguish between the purpose of an alert and a warning message.

An *alert* is meant to grab peoples' attention, notifying them that an emergency is taking place and that there is important information, which will be provided to them. The purpose of a *warning message* is to give that important information to occupants.

Guidance on the construction and dissemination of both alerts and warnings is provided here.

G.2.1 Alerts. It is imperative to disseminate an alert to let occupants know that a warning message will follow. Regardless of whether the warning message is provided audibly, visually, or via tactile means, an alert is necessary to gain people's attention and should be provided separately from the warning message. An effective alert should include the following characteristics:

(1) Alerts should be significantly different from ambient sounds.
(2) Buildings should reduce background noise when initiating audible alerts.
(3) Flashing, rather than static lights, preferably one standard color for all buildings, can be used to gain attention to visual warning messages.
(4) There are additional methods to alert occupants to an emergency: disruption of routine activities, tactile methods, social networks, and face-to-face.
(5) An alert signal should be accompanied by a clear, consistent, concise, and candid warning message.
(6) If selected, an alert should be tested for its success in getting occupants' attention in the event of an emergency and used as part of building- or campus-wide training.

G.2.2 Warnings. Warning messages should provide information to the occupants on the state of the emergency and what they are supposed to do in response to this emergency. The warning message should come after an alert signal is given and can be provided via visual or audible means. However, before such guidance on message format for visual and audible messages can be provided, it is vital to provide guidance on the content of the warning message itself.

G.2.2.1 The Message. Regardless of the method used to disseminate the warning message, there are certain characteristics that are required of an effective warning message. These are included here:

(1) Message Content.
    (a) A warning message should contain five important topics to ensure that occupants have sufficient information to respond.
        i. Who is providing the message? (i.e., the source of the message)
        ii. What should people do? (i.e., what actions occupants should take in response to the emergency and, if necessary, how to take these actions)
        iii. When do people need to act? (In rapid-onset events, the "when" is likely to be "immediately.")
        iv. Where is the emergency taking place? (i.e., who needs to act and who does not)
        v. Why do people need to act? (including a description of the hazard and its dangers/consequences)
    (b) The source of the message should be someone who is perceived as credible by the occupants
    (c) Building managers, campus managers, and emergency personnel should understand the affected population and, from this understanding, develop a database of possible trusted sources (as well as backup sources).

(2) Message Structure.

(a) Message order for short messages (e.g., 90-characters) should be the following:

i. Source
ii. Guidance on what people should do
iii. Hazard (why)
iv. Location (where)
v. Time.

(b) Message order for longer messages should be the following:

i. Source
ii. Hazard
iii. Location
iv. Guidance
v. Time

(c) Numbered lists can help to chronologically organize multiple steps in a process

(d) For limited message length, message writers could draft the message in a bulleted form; each of the five topics in the warning should be separated as its own bullet point

(e) Distinct audiences should be addressed separately in the message (or in multiple messages)

(3) Message Language (or Wording).

(a) Messages should be written using short, simple words, omitting unnecessary words or phrases.

(b) Messages should be written using active voice, present tense, avoiding hidden verbs.

(c) Messages should be written using short, simple, and clear sentences, avoiding double negatives and exceptions to exceptions; main ideas should be placed before exceptions and conditions.

(d) Emergency messages should be written at a sixth grade reading level or lower. An emergency message can be evaluated for its reading level using computer software and/or a simple calculation.

(e) Emergency messages should be written without the use of jargon and false cognates.

(f) Emergency messages should be provided in the language of the predominant affected populace. If there is a possibility of isolated groups that do not speak the predominant language, multilingual messages should be provided. It is expected that small groups of transients unfamiliar with the predominant language will be picked up in the traffic flow in the event of an emergency and are not likely to be in an isolated situation.

(4) Multiple Messages.

(a) Building managers, campus managers, and emergency personnel should anticipate the need to write more than one emergency message throughout a disaster, including feedback messages or updates.

(b) In update messages, occupants should be told why the information has changed, to ensure that the new message is viewed as credible.

(c) Provide feedback messages after a “non-event” to inform occupants that the alert signal and warning system operated and worked as planned and the reasons why the event did not occur.

(d) Building managers, campus managers, and emergency personnel should test emergency messages with the affected population.

(5) Visual Warnings.

(a) Messages that are displayed visually will have different capabilities and limitations than those disseminated audibly. Message creators should consider different factors and make different types of decisions based upon the dissemination method. The first consideration is the type of visual technology that will be used to disseminate the messages, which can include textual visual displays, SMS text messages, computer pop-ups, email, Internet websites, news (TV broadcast), or streaming broadcast over the web. Depending upon the technology chosen to display visual warning messages, guidance is provided here on message displays to enable occupants to see or notice the displayed warning, understand the warning, perceive warning credibility and risk, and respond appropriately.

(6) Noticing and Reading the Warning.

(a) Place the emergency sign in a location where people will notice it and be able to read it from their original (pre-emergency) location.

(b) Signs will be reliably conspicuous within 15 degrees of the direct line of sight.

(c) Text is easier to read when written with a mixture of upper and lower case letters rather than the use of all capitals.

(d) The recommended relationship for older adults with lower visual acuity is D = 100 * h, providing a more conservative result, and ensuring that a larger population will be able to read the emergency message.

(e) A stroke-to-width ratio of the letters is suggested as 1:5 (generally), with a ratio of 1:7 suggested for lighter letters on a darker background.

(f) Building managers, campus managers, or emergency personnel should consult the ADA Standards for Accessible Design (U.S. Department of Justice 2010) for additional requirements on signage.

(g) Contrast between the text and the background should be at least 30 percent, although recommended values could be as high as 60 percent.

(h) The use of pictorials (in lieu of or in addition to text) can also bring attention to the sign.

(i) Message providers should ensure that emergency information is not blocked by other signs or information.

(7) Comprehending, Believing, and Personalizing the Warning.

(a) Printed text should accompany symbols or pictorials used in visual warnings; a minimum number of words should be used to accompany graphics.

(b) Diagrams that display a series of sequential steps are more successful for comprehension of a process than one single graphic.

(c) A color-contrasted word or statement should be used for text that should be read first and/or be perceived as more urgent than the rest, unless color is used for other reasons (e.g. bilingual text).

(d) A warning message can increase in perceived credibility and risk if occupants are shown that others are also responding.

(e) Simultaneously displayed text (discrete messages) is preferred rather than a sequentially displayed message.

(f) Simultaneously displayed text can also be used for bilingual messages, especially if care is taken to differentiate the text of one language from the text of the other language.

(g) Limit the use of flashing words on visual message displays.

(8) Audible Warnings.

(a) There are specific warning technologies that only (or primarily) affect the aural sense, including public address systems (voice notification systems), automated

voice dialing, satellite/AM/FM radio broadcasts, satellite/off-air television broadcasts, and tone alert radios. Whereas visual technologies can limit message length, audible warnings are often limited only by the attention capabilities of the audience. In other words, an audible message can play for long periods of time with these technology types, and the message creator and source must be careful to provide all important information in an appropriate length of time.

(b) In this section, guidance will be given for methods to increase the likelihood that an individual will perceive, or hear, the message. Following this, guidance will be provided that can increase comprehension of the message for audible messages, as well as the ways in which to increase credibility and risk assessment of the event when the warning is presented audibly.

(9) Perception.

(a) Other, non-alert/warning voices in the background should be reduced or eliminated.

(b) Any voice announcements should also be accompanied by simultaneous visual text.

(10) Comprehending, Believing, and Personalizing the Warning.

(a) Letters are more difficult to identify in speech than numbers, which are more difficult than colors.

(b) People making announcements (or other message sources) should not be heavily accented and should speak with a rate of approximately 175 words per minute.

(c) Audible warnings can be delivered using a live voice, dynamic voice (generated by text-to-speech software), or using prerecorded voice.

(d) The live voice and dynamic voice methods provide the benefit of messages that can be updated with new information while also conveying an appropriate level of urgency, if necessary.

(e) Dynamic and prerecorded voice methods provide the benefits of easily repeating the played messages for longer periods of time and not relying on the voice announcer training or stress level while delivering the message.

(f) For the voice itself, best results will vary, depending on the specific location — for example, in outdoor applications, it has been shown that a male voice will provide better intelligibility, as the naturally lower frequency of the male voice travels better. Inversely, in an interior application, where the background ambient noise is typically in the same lower frequencies, a female voice tends to penetrate better, as it is more distinct from the ambient.

(g) Urgency measures should be used selectively to emphasize the more dangerous, immediate, life-threatening situations (since overuse can lead to non-response in future disasters).

(11) Dissemination of the Warning Message.

(a) Use multiple channels to disseminate the warning message, including visual, audible, and tactile means.

(b) A warning message should be repeated at least once, with some research advocating for message repetition of at least three times.

(c) Messages should be stated in full, and then repeated in full, rather than repeating statements within the same message.

(d) Warning messages should be repeated at intervals, rather than consecutively.

(e) Warning messages should be disseminated as early as possible.

(f) Face-to-face communication should accompany other audible or visual technologies.

(g) Messages should be disseminated using a combination of both push and pull technologies.

(h) Push communication[2] is most important to use for alert signals as well as initial warning messages.

G.3 Emergency Message Templates.

Rapid-onset emergencies often come with little warning and can have a major impact on communities. In order to provide clear, effective instructions for a threatened population, it is important to create message templates ahead of time for a variety of different emergencies.

This section provides examples of message templates for five types of emergency, using various forms of emergency communication technology. All bracketed text can be altered and replaced with text that better suits the needs of the occupants, emergency scenario, emergency response strategies, and the technology being used. Please see Kuligowski and Omori (2014) for more information on the process associated with the development of these templates. Each template follows the guidance presented in this document.

G.3.1 Scenario 1 — Fire in a building, partial evacuation strategy, building-wide public address announcements. Scenario 1 is a fire located on the 10th floor of a 20-story building. Individuals are unable to use elevators in this scenario, except for those who are unable to negotiate the stairs, in which case building staff or fire fighters will assist them using the freight elevator(s).

Protective actions: Occupants on floors 9, 10, and 11 are told to evacuate to the 8th floor (two floors below the fire floor). All other occupants are provided with a message to remain on their floor. Therefore, in this scenario, two different types of messages are required to be provided simultaneously to occupants, depending upon the floor on which they are located: one message will be disseminated to floors 9, 10, and 11, while a different message will be disseminated simultaneously to all other floors.

Technology used to disseminate the message: The building-wide public address system, which is capable of providing different messages to different floors (using a live voice or a dynamic voice).

G.3.1.1 Message Templates for Scenario 1:

(1) Building-wide announcement to Floors 9, 10, and 11: "Attention [floors 9, 10, and 11]. This is your [Building Safety Officer, Joe Smith]. A fire has been reported on the [10th floor] of the building. Everyone on the [9th, 10th, and 11th floors] should move to the [8th floor] to be protected from heat and smoke, since heat and smoke can creep into nearby floors during a fire. Use the stairs immediately. Do not use the elevators. Those who need help getting to the 8th floor, please wait inside the stairwell [or go to the freight elevator lobby]."

(2) Building-wide announcement to all other floors: "Attention. This is your [Building Safety Officer, Joe Smith]. A fire has been reported on the [10th floor] of the building. Please wait on your floor. At this time, you are safer remaining on your floor than leaving the building, because this building is designed to confine the fire [e.g., locally or to the 10th floor only]. Do not use the elevators for any reason. We will give you further instructions, if the situation changes."

G.3.2 Scenario 2 — Fire in a building, full evacuation strategy, building-wide public address announcement, and cell phone text message. Scenario 2 is a fire located on the second floor of a 20-story building in which smoke is traveling up the building's air-conditioning/venting system, causing the need for a full-building evacuation. Individuals are unable to use elevators in this scenario, except for those who are unable to negotiate the stairs, in which case building staff or fire fighters will assist them using the freight elevator(s).

Protective actions: Occupants on all floors are requested to evacuate the building, known as a full-building evacuation.

Technologies used to disseminate the message: The building-wide public address system, which is capable of providing different messages to different floors (using a live voice or a dynamic voice). Also, a 90-character text message alert to cell phone users in the building.

G.3.2.1 Message Templates for Scenario 2:

(1) Building-wide public address system: "Attention. This is [Chief Smith from the Springfield Fire Department]. A fire has been reported on the [second floor] of the building. Everyone must leave the building now to avoid contact with the fire's heat and smoke. Go NOW to your closest stair and leave the building. People who cannot use the stairs should go to the freight elevator lobby for help."
(2) Cell phone text message (90 characters): "Evacuate building now. It is on fire. Go to freight elevator if you need help."

Note: A description of the hazard (a more detailed "why" statement) is not included in this message due to character limits. Also, the source is not listed. It is possible that the source will already be identified in the "From" or "FRM" line of the text message. If message contents are limited, there is always the option to send a follow-up text message that provides more information or that continues the previous message. Also remember that some phones (i.e. non-smart phones) could display longer text messages in reverse chronological order.

G.3.3 Scenario 3 — Tornado imminent on a college campus, campus-wide audible messaging system, and Twitter message.

Scenario 3 is a tornado imminent on a college campus.

Protective actions: The individuals on the college campus are instructed to "shelter in place." Additionally, the National Weather Service provides examples of protective actions (included below):

Example 1: "TAKE COVER NOW. FOR YOUR PROTECTION MOVE TO AN INTERIOR ROOM ON THE LOWEST FLOOR OF A STURDY BUILDING."

Example 2: "TAKE COVER NOW. MOVE TO AN INTERIOR ROOM ON THE LOWEST FLOOR OF A STURDY BUILDING. AVOID WINDOWS. IF IN A MOBILE HOME...A VEHICLE OR OUTDOORS...MOVE TO THE CLOSEST SUBSTANTIAL SHELTER AND PROTECT YOURSELF FROM FLYING DEBRIS."

Example 3: "THE SAFEST PLACE TO BE DURING A TORNADO IS IN A BASEMENT. GET UNDER A WORKBENCH OR OTHER PIECE OF STURDY FURNITURE. IF NO BASEMENT IS AVAILABLE...SEEK SHELTER ON THE LOWEST FLOOR OF THE BUILDING IN AN INTERIOR HALLWAY OR ROOM SUCH AS A CLOSET. USE BLANKETS OR PILLOWS TO COVER YOUR BODY AND ALWAYS STAY AWAY FROM WINDOWS."

IF IN MOBILE HOMES OR VEHICLES....EVACUATE THEM AND GET INSIDE A SUBSTANTIAL SHELTER. IF NO SHELTER IS AVAILABLE...LIE FLAT IN THE NEAREST DITCH OR OTHER LOW SPOT AND COVER YOUR HEAD WITH YOUR HANDS."

(Examples found here: http://www.nws.noaa.gov/view/validProds.php?prod=TOR)

Technologies used to disseminate the message: A campus-wide siren system with audible messaging capabilities. Also, a 140-character Twitter[3] message should be disseminated as well for this emergency.

G.3.3.1 Message Templates for Scenario 3:

(1) Campus-wide audible messaging system): *Alert tone precedes message* [siren]. "This is [Joan Smith, Chief of Campus Police]. A tornado has been sighted on the ground at [20th Street and Mockingbird Lane]. The tornado is strong and is moving toward the college campus at high speeds (with winds over 160 mph). High winds and large, flying debris can flatten a building in a storm of this magnitude. Take shelter now.

Get inside now, go to the lowest level, and get away from windows. Stay there until further instructions."

(2) Twitter message (140 characters): "Take shelter inside a building NOW. Go to the lowest level, get away from windows. Strong tornado near campus." [Include hashtag in 140 characters.]

Note: The source of the message is not included in this Twitter message since the source will be evident from the Twitter message layout.

G.3.4 Scenario 4 — Chemical spill in a building, building-wide public address announcements, and building-wide email messages. Scenario 4 is a chemical spill in a 40-story office building. The event was an accident and occurred on the 1st floor of the building. There is the possibility of the chemical negatively affecting individuals on the lower floors of the building. Individuals are unable to use elevators in this scenario. For those who are unable to negotiate the stairs, only one freight elevator will be used with fire-fighter assistance.

Protective actions: Occupants are advised to perform different actions based upon the floor on which they are located. First, occupants on the first floor are advised to evacuate the building. At the same time, occupants on floors 2 through 10 are advised to travel to locations higher in the building — preferably to floors 20 through 30. Concurrently, occupants on floors 11 and above are advised to remain in place. Therefore, in this scenario, three different types of messages are required to be provided simultaneously to occupants, depending upon the floor on which they are located: one message will be disseminated to the first floor, one message will be disseminated to floors 2 through 10, and a third message will be disseminated to all other floors.

Technologies used to disseminate the message: The building public address system, which is capable of providing different message to different floors (using a live voice or a dynamic voice). Additionally, an email message (through the company's email system) should be disseminated to employees on floors 2 through 10 to relocate to a higher floor. [*Note: Do not worry about an email to other employees, although in an actual emergency, that would be necessary.*]

G.3.4.1

(1) Building-wide public address system: [first floor occupants] "This is your [Building Manager, Joe Smith]. A dangerous chemical has spilled on the first floor. The chemical makes it difficult to see and can cause trouble breathing. Evacuate immediately."

(2) Building-wide public address system: [floors 2 through 10] "This is your [Building Manager, Joe Smith]. A dangerous chemical has spilled on the first floor. The chemical makes it difficult to see and can cause trouble breathing. Immediately use the stairs to relocate to the [20th through 30th floors], and then wait for further instructions. If you can't use the stairs on your own, go to the freight elevator and wait for help. Relocate now."

(3) Building-wide public address system: [floors 11 and above] "This is your [Building Manager, Joe Smith]. A dangerous chemical has spilled on the first floor. The chemical makes it difficult to see and can cause trouble breathing. People on [floors 1 through 10] are being evacuated. Please stay on your floor. You are safer remaining where you are than if you try to leave the building. The chemical will not reach people on floors 11 and above. You would possibly be exposed to the chemical if you tried to leave the building. Do not use the elevators for any reason. We will give you further instructions if the situation changes."

Note: Provide emails with the same messages as listed above.

G.3.5 Scenario 5 — Violent event in an airport, airport-wide visual messaging screens, and cell phone text message. The fifth scenario is a violent event. Specially, the emergency involves an active shooter that has been identified in a major U.S. airport.

Example protective action: Occupants should evacuate the airport through all accessible doors, including doors from the gate waiting areas onto the tarmac area.

Technologies used to disseminate the message (along with example character limits that can be typical for these types of technologies): A 90-character text message alert to individuals' phones within the airport. Also, airport-wide visual messaging screens (limit message to 60 words or less) can be used to alert individuals in terminals where the shooter is NOT located.

G.3.5.1 Message Templates for Scenario 5:

(1) Airport-wide visual messaging screens: "This is Los Angeles Police. Evacuate the terminal NOW. Follow directions from airport security. Shots have been fired near Gate 22."
(2) Cell phone text message (90 characters): "Leave NOW. Follow airport security. **Shots fired!** Police report: Shooter in Terminal A."

Note: A description of the hazard (a more detailed "why" statement) is not included in this message due to character limits. If message contents are limited, there is always the option to send a follow-up text message that provides more information or that continues the previous message. Also remember that some phones (i.e., non-smart phones) could display longer text messages in reverse chronological order.

G.4 Future Direction.

The purpose of this report is to provide guidance to system designers, building managers, and building emergency personnel responsible for emergency communication on how to create and disseminate effective messages using basic communication modes (audible vs. visual technology), as well as examples of emergency messages (message templates) for five different types of emergency scenarios. START (2013) contains additional message templates for similar types of rapid-onset events for both limited- and unlimited-character length dissemination technologies. Additionally, Kuligowski and Omori (2014) provide guidance on how to test the effectiveness of these messages.

As with any document, there are gaps in the research that hinder the ability to provide guidance on certain topics, including message length and repetition. This guidance document focuses specifically on textual message creation, creating room for additional guidance on the development and testing of visual symbols that could be used instead of, or in addition to, textual emergency messages. In the future, as research gaps are addressed, additional editions of this document would be useful to enhance the findings and guidance provided here.

G.5 References.

Kuligowski, E.D., S.M.V. Gwynne, K.M. Butler, B.L. Hoskins, and C.R. Sandler, 2012. *Developing Emergency Communication Strategies for Buildings*. Technical Note 1733, National Institute of Standards and Technology: Gaithersburg, MD.

Kuligowski, E.D. and Omori, H., 2014. *General Guidance on Emergency Communication Strategies for Buildings, 2nd Edition*. NIST Technical Note 1827, National Institute of Standards and Technology: Gaithersburg, MD.

U.S. Department of Justice, September 2010. 2010 *ADA Standards for Accessible Design*. Washington, DC: DOJ. http://www.ada.gov/2010ADAstandards_index.htm.

START (National Consortium for the Study of Terrorism and Responses to Terrorism), 2013. *Task 2.9: Phase II Interim Report on Results from Experiments, Think-out-Louds, and Focus Groups.* University of Maryland, College Park: College Park, MD.

G.6 Footnotes.

[1]Rapid-onset emergencies are those emergencies that occur with no or almost no (in the case of minutes) notice, rather than slow-onset events (i.e., emergencies in which the occurrence is known hours or even days in advance). These different emergency types require different sets of emergency messages and dissemination techniques to allow building occupants to receive information in a timely manner, resulting in efficient and safer public response.

[2]Push technologies are those that do not require individuals to take extra effort to receive the alert or warning message (e.g., public address systems or text messages), whereas pull technologies require the individual to seek additional information to acquire the alert/message (e.g., Internet websites).

[3]Certain commercial entities, equipment, or materials are identified in this document in order to describe an experimental procedure or concept adequately. Such identification is not intended to imply recommendation or endorsement by the National Institute of Standards and Technology, nor is it intended to imply that the entities, materials, or equipment identified are necessarily the best available for the purpose.

Carbon Monoxide

ANNEX

H

N *This annex is not a part of the requirements of this NFPA document but is included for informational purposes only.*

Annex H consists of information that had been included as Annex B and C to NFPA 720, *Standard for the Installation of Carbon Monoxide (CO) Detection and Warning Equipment*. The data presented provide an overview of potential symptoms that victims may experience for different exposure levels of carbon monoxide (CO). In general, CO alarms are designed to provide warnings at a 10 percent COHb level as noted on Figure H.1, which is established for healthy adults. As a point of reference, cigarette smokers can have elevated COHb levels of 5 percent to 10 percent.

In addition to the potential hazards that CO presents, the annex material also provides guidance for how public emergency personnel should respond to a CO incident.

N H.1 Dangers of Carbon Monoxide.

Carbon monoxide is an odorless, tasteless, colorless gas produced by incomplete combustion. Solid, liquid, or gaseous fuels can each, under certain conditions, produce lethal concentrations in the home. *(See Table H.1 and Figure H.1.)*

N ***TABLE H.1*** *Symptoms of Carbon Monoxide Exposure Based on Concentration*

Concentration (ppm CO)	***Symptoms***
50	No adverse effects with 8 hours of exposure
200	Mild headache after 2–3 hours of exposure
400	Headache and nausea after 1–2 hours of exposure
800	Headache, nausea, and dizziness after 45 minutes of exposure; collapse and unconsciousness after 2 hours of exposure
1,000	Loss of consciousness after 1 hour of exposure
1,600	Headache, nausea, and dizziness after 20 minutes of exposure
3,200	Headache, nausea, and dizziness after 5–10 minutes of exposure; collapse and unconsciousness after 30 minutes of exposure
6,400	Headache and dizziness after 1–2 minutes of exposure; unconsciousness and danger of death after 10–15 minutes of exposure
12,800 (1.28% by volume)	Immediate physiological effects; unconsciousness and danger of death after 1–3 minutes of exposure

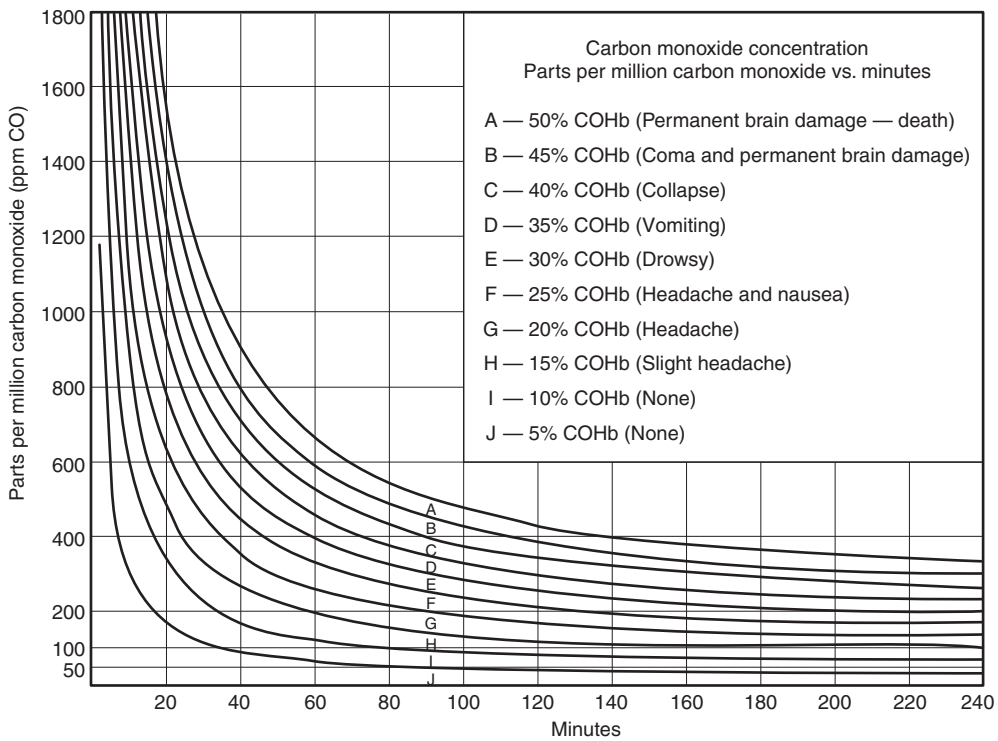

N ***FIGURE H.1*** *Carbon Monoxide Concentration (ppm CO) Versus Time (Minutes).*

The values in Table H.1 are approximate values for healthy adults. Children, the elderly, and persons with preexisting physical conditions might be more susceptible to the effects of carbon monoxide exposure. Continued exposure after unconsciousness can cause death. The dangers of carbon monoxide exposure depend on a number of variables, such as the occupant's health, activity level, time of exposure, and initial carboxyhemoglobin (COHb) level. Due to these variables, Table H.1 and Figure H.1 are to be used as general guidelines and might not appear quantitatively consistent.

The following equation for determining the estimated percent of COHb in the blood is from "A proposal for evaluating human exposure to carbon monoxide contamination in military vehicles," by Steinberg and Nielson and "Considerations for the physiological variables that determine the blood carboxyhemoglobin concentration in man" by Coburn, Forster, and Kane.

N
$$\%\text{COHb}_t = \%\text{COHb}_0\left[e^{-(t/2398B)}\right] + 218\left[1 - e^{-(t/2398B)}\right] \times \left(0.0003 + \frac{\text{ppm CO}}{1316}\right) \quad \textbf{[H.1]}$$

where:

$\%\text{COHb}_t$ = percentage of COHb at time t
$\%\text{COHb}_0$ = percentage of COHb in the blood at time 0
t = time (minutes)
B = 0.0404 (work effort)
ppm CO = parts per million carbon monoxide

N H.2 Information for Emergency Responders.

Guideline Summary. How public emergency response organizations respond to carbon monoxide (CO) incident calls is essential for the safety of the building occupants and the emergency responders. One reference that can be helpful to emergency responders is the Consumer Product Safety Commission (CPSC) *Responding to Residential Carbon Monoxide Incidents: Guidelines for Fire and Other Emergency First Response Personnel*. This guide is designed to help emergency responders act quickly and effectively when responding to a CO incident, and it provides the following:

(1) Guidelines for dispatchers handling calls
(2) Incident reporting forms to help emergency responders identify the elevated source of carbon monoxide, the level of care needed by occupants, and when it is safe for occupants to return to the building
(3) Advice and actions to give building occupants

The CPSC guide is available for download at https://www.cpsc.gov/s3fs-public/coguide.pdf.

Reference Cited In Commentary

NFPA 720, *Standard for the Installation of Carbon Monoxide (CO) Detection and Warning Equipment* (withdrawn), National Fire Protection Association, Quincy, MA.

Informational References

ANNEX

I

This annex lists publications that are referenced within the Code's nonmandatory annexes. Chapter 2 lists publications that are mandatory to the extent referenced within the mandatory body of the Code. The publications in this annex are NOT mandatory. However, some publications are listed in both Chapter 2 and this annex. This duplication is because they are referenced both in the mandatory body of the Code and in the nonmandatory annexes. This list is neither an exhaustive list nor an endorsement of the materials mentioned.

I.1 Referenced Publications.

The documents or portions thereof listed in this annex are referenced within the informational sections of this Code and are not part of the requirements of this document unless also listed in Chapter 2 for other reasons.

Δ **I.1.1 NFPA Publications.** National Fire Protection Association, 1 Batterymarch Park, Quincy, MA 02169-7471.

NFPA 3, *Standard for Commissioning of Fire Protection and Life Safety Systems*, 2018 edition.

NFPA 4, *Standard for Integrated Fire Protection and Life Safety System Testing*, 2018 edition.

NFPA 10, *Standard for Portable Fire Extinguishers*, 2018 edition.

NFPA 11, *Standard for Low-, Medium-, and High-Expansion Foam*, 2016 edition.

NFPA 12, *Standard on Carbon Dioxide Extinguishing Systems*, 2018 edition.

NFPA 12A, *Standard on Halon 1301 Fire Extinguishing Systems*, 2018 edition.

NFPA 13, *Standard for the Installation of Sprinkler Systems*, 2019 edition.

NFPA 14, *Standard for the Installation of Standpipe and Hose Systems*, 2016 edition.

NFPA 15, *Standard for Water Spray Fixed Systems for Fire Protection*, 2017 edition.

NFPA 17, *Standard for Dry Chemical Extinguishing Systems*, 2017 edition.

NFPA 17A, *Standard for Wet Chemical Extinguishing Systems*, 2017 edition.

NFPA 70®, *National Electrical Code®*, 2017 edition.

NFPA 72E, *Standard for Automatic Fire Detectors*, 1984 edition.

NFPA 80, *Standard for Fire Doors and Other Opening Protectives*, 2019 edition.

NFPA 90A, *Standard for the Installation of Air-Conditioning and Ventilating Systems*, 2018 edition.

NFPA 90B, *Standard for the Installation of Warm Air Heating and Air-Conditioning Systems*, 2018 edition.

NFPA 92, *Standard for Smoke Control Systems*, 2018 edition.

NFPA *101®*, *Life Safety Code®*, 2018 edition.

NFPA 105, *Standard for Smoke Door Assemblies and Other Opening Protectives*, 2019 edition.

NFPA 111, *Standard on Stored Electrical Energy Emergency and Standby Power Systems*, 2019 edition.

NFPA 170, *Standard for Fire Safety and Emergency Symbols*, 2018 edition.
NFPA 551, *Guide for the Evaluation of Fire Risk Assessments*, 2016 edition.
NFPA 730, *Guide for Premises Security*, 2018 edition.
NFPA 731, *Standard for the Installation of Electronic Premises Security Systems*, 2017 edition.
NFPA 750, *Standard on Water Mist Fire Protection Systems*, 2019 edition.
NFPA 909, *Code for the Protection of Cultural Resource Properties — Museums, Libraries, and Places of Worship*, 2017 edition.
NFPA 914, *Code for Fire Protection of Historic Structures*, 2015 edition.
NFPA 1221, *Standard for the Installation, Maintenance, and Use of Emergency Services Communications Systems*, 2019 edition.
NFPA 1600®, *Standard on Disaster/Emergency Management and Business Continuity/Continuity of Operations Programs*, 2016 edition.
NFPA 5000®, *Building Construction and Safety Code®*, 2018 edition.
Fire Protection Research Foundation, *Elevator Messaging Strategies,* 2011.
Fire Protection Research Foundation, *Optimizing Fire Alarm Notification for High Risk Groups*, 2007.
Fire Protection Research Foundation (FPRF) Report, *Development of Technical Basis for Carbon Monoxide Detector Siting*, prepared by C. Beyler and D. Gottuk, 2007.

I.1.2 Other Publications.

I.1.2.1 ANSI Publications. American National Standards Institute, Inc., 25 West 43rd Street, 4th Floor, New York, NY 10036.

ANSI S3.2, *Method for Measuring the Intelligibility of Speech Over Communications Systems*, 1989, revised 2009.
ANSI/ASA S3.41, *American National Standard Audible Emergency Evacuation (E2) and Evacuation Signals with Relocation Instructions (ESRI)*, 1990, reaffirmed 2015.

I.1.2.2 ASME Publications. American Society of Mechanical Engineers, Two Park Avenue, New York, NY 10016-5990.

ANSI/ASME A17.1/CSA B44, *Safety Code for Elevators and Escalators*, 2016.
ASME A.17.2, *Guide for Inspection of Elevators, Escalators and Moving Walks*, 2014.

Δ **I.1.2.3 FEMA Publications.** Federal Emergency Management Agency, U.S. Department of Homeland Security, 500 C Street, SW, Washington DC, 20024.

FEMA Publication CPG-17, *Outdoor Warning Systems Guide*, March 1980.

I.1.2.4 FM Publications. FM Global, 270 Central Avenue, P.O. Box 7500, Johnston, RI 02919.

FM 3210, *Heat Detectors for Automatic Fire Alarm Signaling*, 2007.
ANSI/FM 3260, *American National Standard for Energy-Sensing Fire Detectors for Automatic Fire Alarm Signaling,* 2014.

I.1.2.5 IEC Publications. International Electrotechnical Commission, 3 rue de Varembé, P.O. Box 131, CH-1211 Geneva 20, Switzerland. IEC documents are available through ANSI.

IEC 60268, *Sound system equipment — Part 16: Objective rating of speech intelligibility by speech transmission index,* 2nd edition, 2011.

N **I.1.2.6 IEEE Standards Association Publications.** Institute of Electrical and Electronics Engineers, 3 Park Avenue, New York, NY 10016-5997

IEEE Std TM 450, *Recommended Practice for Maintenance, Testing, and Replacement of Vented Lead-Acid Batteries for Stationary Applications*, 2010.
IEEE Std TM 485, *Recommended Practice for Sizing Lead-Acid Batteries for Stationary Applications*, 2010.

IEEE Std TM 1106, *Recommended Practice for Installation, Maintenance, Testing, and Replacement of Vented Nickel-Cadmium Batteries for Stationary Applications*, 2005.
IEEE Std TM 1188, *Recommended Practice for Maintenance, Testing, and Replacement of Valve-Regulated Lead-Acid (VRLA) Batteries for Stationary Applications*, 2005.
IEEE 802.3af, *Standard for Information Technology — Telecommunications and Information Exchange Between Systems — Local and Metropolitan Area Networks — Specific Requirements — Part 3*, 2003.

I.1.2.7 IES Publications. Illuminating Engineering Society of North America, 120 Wall Street, 17th floor, New York, NY 10005.

Lighting Handbook Reference and Application, 2008.

I.1.2.8 ISO Publications. International Organization for Standardization, ISO Central Secretariat, BIBC II, Chemin de Blandonnet 8, CP 401, 1214 Vernier, Geneva, Switzerland.

ISO/TR 4870, *Acoustics — The Construction and Calibration of Speech Intelligibility Tests*, 1991.
ISO 7240-19, *Fire Detection and Alarm Systems — Part 19: Design, Installation, Commissioning, and Service of Sound Systems for Emergency Purposes*, 2007.
ISO 8201, *Audible Emergency Evacuation Signal*, 2015.
ISO/IEC 14763-2, *Information technology — Implementation and operation of customer premises cabling — Part 2: Planning and installation*, 2012.
ISO/IEC 14763-3, *Informational technology — implementation and operation of customer premises cabling — Part 3: Testing of optical fibre cabling*, 2014

I.1.2.9 NEMA Publications. National Electrical Manufacturers Association, 1300 North 17th Street, Suite 900, Arlington, VA 22209.

ANSI/NEMA SB-40, *Communications Systems for Life Safety in Schools*, 2015.
NEMA SB-50, *Emergency Communications Audio Intelligibility Applications Guide*, 2014.

I.1.2.10 NIST Publications. National Institute of Standards and Technology, 100 Bureau Drive, Gaithersburg, MD 20899-1070.

NIST 6055, *Electromagnetic Signal Attenuation in Construction Materials*, 1997.
NIST Technical Note 1779, *General Guidance on Emergency Communications Strategies for Buildings*, February 2013.

I.1.2.11 OASIS Publications. Organization for the Advancement of Structured Information Standards (OASIS), 25 Corporate Drive, Suite 103, Burlington, MA 01803.

OASIS Standard CAP-V1.2, *OASIS Common Alerting Protocol*, Version 1.2.

I.1.2.12 SFPE Publications. Society of Fire Protection Engineers, 9711 Washingtonian Blvd, Suite 380, Gaithersburg, MD 20878.

SFPE Engineering Guide: Evaluation of the Computer Fire Model DETACT QS, 2002.
SFPE Engineering Guide to Human Behavior in Fire, 2003.
SFPE Engineering Guide to Performance-Based Fire Protection, 2nd edition, 2007.
SFPE Handbook of Fire Protection Engineering, 5th edition, 2016.
Keating, John P. and Loftus, Elizabeth F., "People Care in Fire Emergencies — Psychological Aspects, 1975," SFPE, 1975.

N **I.1.2.13 TIA Publications.** Telecommunications Industry Association, 1320 North Courthouse Road, Suite 200, Arlington, VA 22201.

ANSI/TIA-569-D, *Telecommunications Pathways and Spaces*, April 2015.
TIA-526, *Standard Test Procedures for Fiber Optic Systems*, September 1992.

N **I.1.2.14 UL Publications.** Underwriters Laboratories Inc., 333 Pfingsten Road, Northbrook, IL 60062-2096

ANSI/UL 268, *Standard for Smoke Detectors for Fire Alarm Systems,* 6th edition, 2009.
ANSI/UL 268A, *Standard for Smoke Detectors for Duct Application*, 4th edition, 2008, revised 2016.
ANSI/UL 827, *Standard for Central-Station Alarm Services*, 2014.
ANSI/UL 864, *Standard for Control Units and Accessories for Fire Alarm Systems*, 9th edition, 2003, revised 2012.
ANSI/UL 1638, *Visible Signaling Devices for Fire Alarm and Signaling Systems, Including Accessories*, 5th edition, 2016.
ANSI/UL 1971, *Standard for Signaling Devices for the Hearing Impaired,* 3rd edition, 2002, revised 2013.
ANSI/UL 2075, *Standard for Safety Gas and Vapor Detectors and Sensors*, 2013.
ANSI/UL 2572, *Mass Notification Systems*, 2nd edition, 2016.

In previous editions of *NFPA 72*, the ANSI/UL documents were listed under ANSI Publications in H.1.2.1. In the 2019 edition, all referenced UL documents are listed in I.1.2.14 because they are in fact published by UL and not by ANSI.

I.1.2.15 U.S. Government Publications. U.S. Government Publishing Office, 732 North Capitol Street, NW, Washington, DC 20401-0001.

ADA-ABA-AG, *Americans with Disabilities Act and Architectural Barriers Act Accessibility Guidelines,* 2010.
NIST Technical Note 1455–1, *Performance of Home Smoke Alarms, Analysis of the Response of Several Available Technologies in Residential Fire Settings,* February 2008.
Title 29, Code of Federal Regulations, Part 1910.5.
Title 47, Code of Federal Regulations, Part 15.

I.1.2.16 References Associated with Annex A.

I.1.2.16.1 Reference to A.18.4.7.2. http://www.aip.org/pt/nov99/locsound.html.

N **I.1.2.16.2 Reference to A.18.5.5.5.1.** "Recommended Light Levels," National Optical Astronomy Observatory, www.noao.edu.

I.1.2.16.3 References to A.24.3.12.

(1) *CARVER — Target Analysis and Vulnerability Assessment Methodology*, Washington, DC: U.S. Department of Defense (see Field Manual 34-36, Special Operation Forces Intelligence and Electronics Warfare Operation, Sept. 30, 1991), www.defense.gov
(2) *General Security Risk Assessment Guidelines*. Alexandria, VA: American Society for Industrial Security International, www.asisonline.org
(3) *NFPA 1600*, *Standard on Disaster/Emergency Management and Business Continuity/Continuity of Operations Programs*, Quincy, MA: National Fire Protection Association, www.nfpa.org
(4) NFPA 730, *Guide for Premises Security*, Quincy, MA: National Fire Protection Association, www.nfpa.org
(5) *Responsible Care Code*, Washington, DC: American Chemistry Council, www.americanchemistry.com
(6) *Risk and Resilience Management of Water & Wastewater Systems*, Denver, CO: American Water Works Association, www.awwa.org
(7) *VAMCAP® Vulnerability Assessment Methodology for Critical Asset Protection*, Wilmington, DE: SafePlace Corporation, www.safeplace.com
(8) *Vulnerability Assessment Methodologies*, Albuquerque, NM: Sandia National Laboratories, www.sandia.gov

I.1.2.16.4 References to A.24.4.8.

(1) Schifiliti, R.P., "To Leave or Not to Leave — That is the Question!", National Fire Protection Association, World Fire Safety Congress & Exposition, May 16, 2000, Denver, CO.
(2) Ramachandran, G., "Informative Fire Warning Systems," *Fire Technology,* Volume 47, Number 1, February 1991, National Fire Protection Association, 66–81.
(3) J. Bryan, "Psychological Variables That May Affect Fire Alarm Design," *Fire Protection Engineering,* Society of Fire Protection Engineers, Issue No. 11, Fall 2001.
(4) Proulx, G., "Cool Under Fire," *Fire Protection Engineering,* Society of Fire Protection Engineers, Issue No. 16, Fall 2002.
(5) General Services Administration, Proceedings of the Reconvened International Conference on Fire Safety in High Rise Buildings, Washington, D.C., October 1971.
(6) Proulx, G., "Strategies for Ensuring Appropriate Occupant Response to Fire Alarm Signals," National Research Council of Canada, Ottawa, Ontario, *Construction Technology Update,* No. 43, 1–6, December 2000.

Δ **I.1.2.16.5 References to A.29.2.**

"A Few Facts at the Household Level," NFPA Fire Analysis Division, *Fire Journal*, July 2009.
Ahrens, M., "Home Structure Fires," NFPA Fire Analysis and Research Division, September 2016.
Haynes, Hylton J.G., "Fire Loss in the United States during 2015," NFPA Fire Analysis and Research Division, September 2016.
Injury Facts, National Safety Council, Itasca, IL, 2011.

I.1.2.16.6 References to A.29.5.8.

Bruck, D. and Thomas, I., "Smoke alarms for sleeping adults who are hard-of-hearing: comparison of auditory, visual, and tactile signals," *Ear and Hearing*, 30(1), February 2009, pp. 73–80.
Bruck, D., Thomas, I., and Ball, M., "Optimizing Fire Alarm Notification for High Risk Groups Research Project — Waking effectiveness of alarms (auditory, visual and tactile) for the alcohol impaired," Report to the Fire Protection Research Foundation, June 2007.
Roby, R., "Smoke Detector Alert for the Deaf," Phase II SBIR, Final Report, NIH Grant No. 2R44 DC004254-2, May 27, 2005.

Δ **I.1.2.16.7 References to A.29.8.1.**

NBS GCR 75-51, *Detector Sensitivity and Siting Requirements for Dwellings*, 1975.
NBS GCR 77-82, *Detector Sensitivity and Siting Requirements for Dwellings Phase 2*, 1977.
NIST Technical Note 1455-1, *Performance of Home Smoke Detectors Analysis of the Response of Several Available Technologies in a Residential Setting,* 2007.

Δ **I.1.2.16.8 References to A.29.8.2.1.1.**

Green, M. A. and Andres, C., "2004–2005 National Sample Survey of Unreported Residential Fires," CPSC, 2009.
Ahrens, M., "Factors in Smoke Alarm Performance," National Fire Protection Association, December 2009.
Thomas, I. and Bruck, D., "Smoke Alarms in Dwellings: Timely Activation and Effective Notification," Victoria University, June 2010.

N **I.1.2.16.9 References to A.29.10.8.2.1.**

Stone, W., "Electromagnetic Attenuation in Construction Materials," National Institute of Standards and Technology, NISTIR 6055, 1997.

N **I.1.2.16.10 References to A.29.11.3.**

Kemano Fire Studies Part 1 of Residential Smoke Alarms, National Research Council Canada, April 2003.

Spacing Requirements for Complex Beamed and Sloped Ceilings Report, The Fire Protection Research Foundation, NFPA, April 2008.

N **I.1.2.16.11 References to A.29.11.3.4(9).**

Gottuk, E.D. and Gottuk, D.T., "The Effect of Ceiling Fans on Smoke Alarm Performance," NFPA Research Foundation SUPDET Symposium presentation, 2015.

N **I.1.2.17 Other Publications — Related to Carbon Monoxide Provisions.**

Ashley, E., DuBois, J., "Waking Effectiveness of Audible, Visual, and Vibratory Emergency Alarms Across All Hearing Levels," Fire Suppression and Detection Research Symposium, Orlando, FL 2005.

Coburn, R. F., Forster, R. E., and Kane, P. G., "Considerations for the physiological variables that determine the blood carboxyhemoglobin concentration in man," Journal of Clinical Investigation, 1965, November; 44(11):1899–1910.

Fire Protection Research Foundation (FPRF) Report, Development of Technical Basis for Carbon Monoxide Detector Siting, prepared by C. Beyler and D. Gottuk, 2007.

Report of research on emergency signaling devices for use by the hearing impaired (Subject 1971), Underwriters Laboratories, 1991.

Steinberg, S., and Nielson, G. D., "A proposal for evaluating human exposure to carbon monoxide contamination in military vehicles," AMCMS Code 672716.H700011, March 1977.

Stone, W. Electromagnetic Attenuation in Construction Materials, National Institute of Standards and Technology, NISTIR 6055, 1997.

Title 47, Code of Federal Regulations, Part 15.

N **I.1.2.18 References Associated with Annex B.**

(1) Alpert, R. "Ceiling Jets," *Fire Technology*, August 1972.
(2) "Evaluating Unsprinklered Fire Hazards," *SFPE Technology Report* 83-2.
(3) Babrauskas, V., Lawson, J. R., Walton, W. D., and Twilley, W. H. "Upholstered Furniture Heat Release Rates Measured with a Furniture Calorimeter," (NBSIR 82-2604) (Dec. 1982). National Institute of Standards and Technology (formerly National Bureau of Standards), Center for Fire Research, Gaithersburg, MD 20889.
(4) Beyler, C. "A Design Method for Flaming Fire Detection," *Fire Technology*, Vol. 20, No. 4, November 1984.
(5) Hurley, M. J., ed., Chapter 40, *SFPE Handbook of Fire Protection Engineering*, by R. Schifiliti, R. Custer, and B. Meacham, 2016.
(6) Evans, D. D. and Stroup, D. W. "Methods to Calculate Response Time of Heat and Smoke Detectors Installed Below Large Unobstructed Ceilings," (NBSIR 85-3167) (Feb. 1985, issued Jul. 1986). National Institute of Standards and Technology (formerly National Bureau of Standards), Center for Fire Research, Gaithersburg, MD 20889.
(7) Heskestad, G. "Characterization of Smoke Entry and Response for Products-of-Combustion Detectors" Proceedings, 7th International Conference on Problems of Automatic Fire Detection, Rheinish-Westfalischen Technischen Hochschule Aachen (March 1975).
(8) Heskestad, G. "Investigation of a New Sprinkler Sensitivity Approval Test: The Plunge Test," FMRC Tech. Report 22485, Factory Mutual Research Corporation, 1151 Providence Turnpike, Norwood, MA 02062.
(9) Heskestad, G. and Delichatsios, M. A. "The Initial Convective Flow in Fire: Seventeenth Symposium on Combustion," The Combustion Institute, Pittsburgh, PA (1979).

(10) Heskestad, G. and Delichatsios, M. A. "Environments of Fire Detectors — Phase 1: Effect of Fire Size, Ceiling Height and Material," Measurements Vol. I (NBS-GCR-77-86), Analysis Vol. II (NBS-GCR-77-95). National Technical Information Service (NTIS), Springfield, VA 22151.
(11) Heskestad, G. and Delichatsios, M. A. "Update: The Initial Convective Flow in Fire," *Fire Safety Journal*, Vol. 15, No. 5, 1989.
(12) International Organization for Standardization, *Audible Emergency Evacuation Signal*, ISO 8201, 1987.
(13) Klote, J. and Milke, J. "Principles of Smoke Management," American Society of Heating, Refrigerating and Air Conditioning Engineers, Atlanta, GA, 2002.
(14) Lawson, J. R., Walton, W. D., and Twilley, W. H. "Fire Performance of Furnishings as Measured in the NBS Furniture Calorimeter, Part 1," (NBSIR 83-2787) (Aug. 1983). National Institute of Standards and Technology (formerly National Bureau of Standards), Center for Fire Research, Gaithersburg, MD 20889.
(15) Morton, B. R., Taylor, Sir Geoffrey, and Turner, J. S. "Turbulent Gravitational Convection from Maintained and Instantaneous Sources," Proc. Royal Society A, 234, 1–23, 1956.
(16) Schifiliti, R. "Use of Fire Plume Theory in the Design and Analysis of Fire Detector and Sprinkler Response," Master's Thesis, Worcester Polytechnic Institute, Center for Firesafety Studies, Worcester, MA, 1986.
(17) Title 47, Code of Federal Regulations, Communications Act of 1934 Amended.
(18) Schifiliti, R. and Pucci, W. "Fire Detection Modelling, State of the Art," 6 May, 1996 sponsored by the Fire Detection Institute, Bloomfield, CT.
(19) Forney, G., Bukowski, R., Davis, W. "Field Modelling: Effects of Flat Beamed Ceilings on Detector and Sprinkler Response," Technical Report, Year 1. International Fire Detection Research Project, National Fire Protection Research Foundation, Quincy, MA. October, 1993.
(20) Davis, W., Forney, G., Bukowski, R. "Field Modelling: Simulating the Effect of Sloped Beamed Ceilings on Detector and Sprinkler Response," Year 1. International Fire Detection Research Project Technical Report, National Fire Protection Research Foundation, Quincy, MA. October, 1994.
(21) Brozovski, E. "A Preliminary Approach to Siting Smoke Detectors Based on Design Fire Size and Detector Aerosol Entry Lag Time," Master's Thesis, Worcester Polytechnic, Worcester, MA, 1989.
(22) Cote, A. *NFPA Fire Protection Handbook*, 20th edition, National Fire Protection Association, Quincy, MA, 2008.
(23) Tewarson, A., "Generation of Heat and Chemical Compounds in Fires," *SFPE Handbook of Fire Protection Engineering*, Second Edition, NFPA and SFPE, 1995.
(24) Hollman, J. P. *Heat Transfer*, McGraw-Hill, New York, 1976.
(25) Custer, R. L. P., and Meacham, B. "Introduction to Performance Based Fire Safety," SFPE, 1997.
(26) Schifiliti, R. P., Meacham B., Custer, R. L. P. "Design of Detection Systems," *SFPE Handbook of Fire Protection Engineering*.
(27) Marrion, C. "Correction Factors for the Heat of Combustion in NFPA 72," Appendix B, Fire Protection Engineering, SFPE, 1998.
(28) Marrion, C. "Designing and Analyzing the Response of Detection Systems: An Update to Previous Correlations," 1988.
(29) Custer, R. and Bright, R. "Fire Detection: The State-of-the-Art," NBS Tech. Note 839, National Bureau of Standards, Washington, 1974.
(30) Meacham, Brian J. "Characterization of Smoke from Burning Materials for the Evaluation of Light Scattering-Type Smoke Detector Response," MS Thesis, WPI Center for Firesafety Studies, Worcester, MA, 1991.

(31) Delichatsios, M. A. "Categorization of Cable Flammability, Detection of Smoldering, and Flaming Cable Fires," Interim Report, Factory Mutual Research Corporation, Norwood, MA, NP-1630, November 1980.
(32) Heskestad, G. FMRC Serial Number 21017, Factory Mutual Research Corp., Norwood, MA, 1974.
(33) Marrion, C. E. "Lag Time Modeling and Effects of Ceiling Jet Velocity on the Placement of Optical Smoke Detectors," MS Thesis, WPI Center for Firesafety Studies, Worcester, MA, 1989.
(34) Kokkala, M. et al. "Measurements of the Characteristic Lengths of Smoke Detectors," *Fire Technology*, Vol. 28, No. 2, National Fire Protection Association, Quincy, MA, 1992.
(34a) Yamauchi et al. "A Calculation Method for Predicting Heat and Smoke Detector's Response."
(34b) Cleary et al. "Particulate Entry Lag in Spot Type Smoke Detectors," IAFSS Proceedings, Boston, MA 2000.
(34c) Keski-Rahkonen, "Revisiting Modeling of Fluid Penetration into Smoke Detectors," AUBE 2001.
(34d) Bjoerkman et al. "Determination of Dynamic Model Parameters of Smoke Detectors," *Fire Safety Journal*, No 37, pp. 395–407, 2002.
(34e) Keski-Rahkonen, "A New Model for Time Lag of Smoke Detectors," International Collaborative Project to Evaluate Fire Models for Nuclear Power Plant Application, Gaithersburg, MD May 2002.
(35) UL 268, *Standard for Smoke Detectors for Fire Alarm Systems*, Underwriters Laboratories, Inc., Northbrook, IL, 2009.
(36) Deal, Scott. "Technical Reference Guide for FPEtool Version 3.2," NISTIR 5486, National Institute for Standards and Technology, U.S. Department of Commerce, Gaithersburg, MD, Aug. 1994.
(37) Mowrer, F. W. "Lag Times Associated with Detection and Suppression," *Fire Technology*, Vol. 26, No. 3, pp. 244–265, 1990.
(38) Newman, J. S. "Principles for Fire Detection," *Fire Technology*, Vol. 24, No. 2, pp. 116–127, 1988.
(39) Custer, R., Meacham, B., Wood, C. "Performance Based Design Techniques for Detection and Special Suppression Applications," Proceedings of the SFPE Engineering Seminars on Advances in Detection and Suppression Technology, 1994.
(40) SFPE *Engineering Guide to Performance Based Fire Protection,* 2nd edition, 2007, SFPE, Gaithersburg, MD.
(41) SFPE *Handbook of Fire Protection Engineering*, 5th edition, SFPE, Gaithersburg, MD, 2016.
(42) Drysdale, Dougal, *An Introduction to Fire Dynamics*, John Wiley & Sons, New York, NY, 1998, ISBN 0 471 90613 1, 2nd edition.
(43) Nam S., Donovan L.P. and Kim S.G., Establishing Heat Detectors Thermal Sensitivity Through Bench Scale Tests, *Fire Safety Journal*, Volume 39, Number 3, 191–215, April 2004.
(44) Nam S., Thermal Response Coefficient TRC of Heat Detectors and Its Field Applications, Fire Detection and Research Applications Symposium, NFP Research Foundation, January 2003.
(45) Nam S., Performance-Based Heat Detector Spacing, Interflam 2004, pp 883–892.
(46) Geiman, J. A., "Evaluation of Smoke Detector Response Estimation Methods," Master of Science Thesis, University of Maryland, College Park, MD, December 2003.
(47) Projected Beam Smoke Detectors — More Than Just a Substitute for Spot Detectors; Fire Protection Engineering, Summer 2004, SFPE.

(48) Geiman, J.A., and Gottuck, D.T., "Alarm Thresholds for Smoke Detector Modeling," *Fire Safety Science — Proceeding of the Seventh International Symposium*, 2003, pp. 197–208.
(49) *The SFPE Code Official's Guide to Performance-based Design Review and Analysis of Buildings*, Society of Fire Protection Engineers, Bethesda, MD, 2004.
(50) NFPA *101*, *Life Safety Code*, National Fire Protection Association, Quincy, MA, 2009.
(51) NFPA 909, *Code for the Protection of Cultural Resource Properties — Museums, Libraries, and Places of Worship*, National Fire Protection Association, Quincy, MA, 2010.
(52) NFPA 914, *Code for Fire Protection of Historic Structures*, National Fire Protection Association, Quincy, MA, 2010.
(53) Performance-based Building Design Concepts, International Code Council, Washington DC, 2004.
(54) *Extreme Event Mitigation In Buildings — Analysis and Design*, Meacham, National Fire Protection Association, Quincy, MA, 2006.
(55) Geiman, Gottuk, and Milke, "Evaluation of Smoke Detector Response Estimation Methods: Optical Density, Temperature Rise and Velocity at Alarm," *Journal of Fire Protection Engineering*, 2006.
(56) Su et al., "Kemano Fire Studies — Part 1: Response of Residential Smoke Alarms," Research Report 108, NRCC, April 2003.
(57) Davis, W., The Zone Model Jet, "A Model for the Prediction of Detector Activation and Gas Temperature in the Presence of a Smoke Layer," NISTIR 6324, NIST, May 1999.
(58) *SFPE Engineering Guide to Human Behavior in Fire*.

I.1.2.19 References Associated with Annex D.

(1) Jacob, K. & Tyson, T., "Computer-Based Prediction of Speech Intelligibility for Mass Notification Systems," SUPDET 2008, Fire Protection Research Foundation, March 2008.
(2) IEC 60268-16, "Sound system equipment — Part 16: Objective rating of speech intelligibility by speech transmission index," 2003.
(3) ANSI/ASA S3.5, "American National Standard Methods for Calculation of the Speech Intelligibility Index," 1997.
(4) Barnett, P.W. and Knight, A.D., "The Common Intelligibility Scale," Proceedings of the Institute of Acoustics, Vol. 17, Part 7, 1995.
(5) IEC 60849, Annex B, Sound Systems for Emergency Purposes, February 1998.
(6) Sander J. van Wijngaarden and Jan A. Verhave, Past Present and Future of the Speech Transmission Index, Chapter 9, Measurement and Prediction of Speech Intelligibility in Traffic Tunnels Using the STI, p113, TNO Human Factors, The Netherlands, 2002.
(7) Mapp, P., "Systematic & Common Errors in Sound System STI and Intelligibility Measurements," Convention Paper 6271, Audio Engineering Society, 117th Convention, San Fran, CA, 28–31 October 2004.
(8) Peter Mapp, Past Present and Future of the Speech Transmission Index, Chapter 8, Practical Application of STI to Assessing Public Address and Emergency Sound Systems, TNO Human Factors, The Netherlands, 2002.

N **I.1.2.20 References Associated with Annex G.** Kuligowski, Erica D., NIST Technical Note 1779: "General Guidance on Emergency Communication Strategies for Buildings," February 2013.

N **I.1.2.21 References Associated with Annex H.** U.S. Consumer Product Safety Commission, *Responding to Residential Carbon Monoxide Incidents: Guidelines for Fire and Other Emergency Response Personnel*, Washington, DC, July 2002, http://www.cpsc.gov/s3fs-public/coguide.pdf.

I.2 Informational References.

The following documents or portions thereof are listed here as informational resources only. They are not a part of the requirements of this document.

N **I.2.1 ASTM Publications.** ASTM International, 100 Barr Harbor Drive, P.O. Box C700, West Conshohocken, PA 19428-2959.

ASTM E2292, *Standard Guide for Field Investigation of Carbon Monoxide Poisoning Incidents*, 2014.

N **I.2.2 EPRI Publications.** Electric Power Research Institute, 3420 Hillview Avenue, Palo Alto, CA 94304

Technical Report 1002925, *Stationary Battery Monitoring by Internal Ohmic Measurement*, 2002.

Technical Report TR-10067577, *Stationary Battery Guide; Design, Application, and Maintenance*, 2002.

N **I.2.3 NFPA Publications.** National Fire Protection Association, 1 Batterymarch Park, Quincy, MA 02169-7471.

NFPA 1192, *Standard on Recreational Vehicles*, 2018 edition.

I.2.4 UL Publications. Underwriters Laboratories Inc., 333 Pfingsten Road, Northbrook, IL 60062-2096.

UL 1973, *Standard for Batteries for Use in Light Electric Rail (LER) Applications and Stationary Applications*, 1st edition, 2013, revised 2016.

ANSI/UL 2034, *Standard for Single and Multiple Station Carbon Monoxide Alarms,* 2008, revised 2009.

UL 2054, *Standard for Household and Commercial Batteries*, 2nd edition, 2004, revised 2011.

ANSI/UL 2075, *Gas and Vapor Detectors and Sensors*, 2004.

UL 9540, *Outline of Investigation for Energy Storage Systems and Equipment*, 1st edition, 2016.

I.3 References for Extracts in Informational Sections.

NFPA 70®, *National Electrical Code®*, 2017 edition.

NFPA 92, *Standard for Smoke Control Systems*, 2018 edition.

NFPA 92B, *Smoke Management Systems in Malls, Atria, and Large Spaces*, 1995 edition.

NFPA *101®*, *Life Safety Code®*, 2018 edition.

NFPA 1221, *Standard for the Installation, Maintenance, and Use of Emergency Services Communications Systems*, 2016 edition.

Section I.3 provides reference information, including title and edition, for NFPA documents extracted throughout the nonmandatory sections of the Code as indicated by a reference in brackets [ ] following a section or paragraph.

Index

-A-

Abnormal (off-normal) condition, 10.3.4, 10.8.1, 12.2.2, 14.4.6, 23.3.3.1(3), 23.5 to 23.7, 24.5.2.2, 24.6.11.2, 24.10.3, 27.6.1.2, A.12.3
  Definition, 3.3.61.1
Accessible, readily (readily accessible)
  Definition, 3.3.3
Accessible (as applied to equipment)
  Definition, 3.3.1
Accessible (as applied to wiring methods)
  Definition, 3.3.2
Accessible spaces (as applied to detection coverage)
  Definition, 3.3.4
Acknowledge, 10.11.8.2, 10.14.6.2, 23.8.1.2.1.1, 26.3.6.6.2, 26.3.8.3.5.2, 26.4.4.2.1.1, 26.4.4.2.2.1(B), 26.4.4.2.2.3, 26.4.4.2.2.4, 26.4.4.3, 26.6.4.1.5, 26.6.6.5, A.26.4.4.3, A.26.6.6.5
  Definition, 3.3.5
Acoustically distinguishable space (ADS), 18.4.11, 24.4.2.2.2, 24.5.3.2, A.18.4.11, A.24.4.2.2.2, D.2.3.1, D.3.5
  Definition, 3.3.6, A.3.3.6
Active multiplex systems, A.26.6.3
  Definition, 3.3.7
  Testing, Table 14.4.3.2
Addressable devices
  Circuits, notification appliances, 23.8.6.4
  Definition, 3.3.8
Adoption of code
  Requirements, 1.7
  Sample ordinance, Annex E
Adverse conditions, 26.6.5.1.4, 26.6.5.1.6, 26.6.5.2.7, A.26.6.5.1.4
  Definition, 3.3.9
Aerial construction, 27.7.1.2.2, 27.7.1.4, 27.7.3.6, 27.7.3.9 to 27.7.3.12
Air ducts, *see* Ducts, detectors in
Air sampling–type detectors, 17.7.3.6, 17.7.6.3.3.3, A.17.7.3.6.1.1 to A.17.7.3.6.4.2
  Definition, 3.3.70.1
  Inspection, Table 14.3.1
  Test methods, Table 14.4.3.2
Air stratification, *see* Stratification
Alarm
  Carbon monoxide (definition), 3.3.11.1
  Definition, 3.3.11
Alarm boxes, 27.4.2.4, 27.6, A.26.4.3.6, A.27.6.1 to A.27.6.6.7 *see also* Auxiliary alarm systems
  Auxiliary, 27.4.2.4(2)
    Definition, 3.3.12.1
    Inspections, Table 14.3.1
    Testing, Table 14.4.3.2
    Wireless network boxes, 27.4.3.8(2)
  Coded, *see* Coded
  Inspections, Table 14.3.1
  Manual, 10.4.7.3, 17.15, 23.3.3.1(1), 23.8.5.1.2, 27.4.2.4, 27.4.3.8, A.17.15.8 to A.17.15.9.5, A.23.8.5.1.2
    Auxiliary fire alarm systems, application of, Table 27.6.3.2.2.3
    Definition, 3.3.12.3, A.3.3.12.3
    Inspections, Table 14.3.1
    Location, 17.15.6, 17.15.9.2, 17.15.9.4 to 17.15.9.6, A.17.15.9.5
    Mass notification system, 24.5.9.4 to 24.5.9.6
    Mounting, 17.15.4, 17.15.5, 17.15.9.6
    Signal initiation, 23.3.3.1(1), 23.8.5.2, 26.2.1.1
    Testing, Table 14.4.3.2
  Master, 27.4.2.4(3), 27.6.4
    Definition, 3.3.12.4
    Inspections, Table 14.3.1
    Testing, Table 14.4.3.2, F.2.16, F.2.17
    Wireless network boxes, 27.4.3.8(3)
  Municipal (street box)
    Definition, 3.3.174
  Publicly accessible, 27.4.2.4(1), 27.6.2, A.27.6.2
    Definition, 3.3.12.5
    Inspections, Table 14.3.1
    Location, 27.6.2.1.6, 27.6.2.1.7, 27.6.2.1.10, A.27.6.2.1.6, A.27.6.2.1.10
    Power supplies, 27.6.6.9 to 27.6.6.13
    Testing, Table 14.4.3.2
    Wired network boxes, 27.6.5
    Wireless network boxes, 27.4.3.8(1), 27.6.6, A.27.6.6.2, A.27.6.6.7
Alarm condition, 10.8.2, 21.3.4, 21.7.6, 21.10.6, 23.8.2.7, A.23.8.2.7.4
  Definition, 3.3.61.1.1, A.3.3.61.1.1
Alarm repeater systems, 27.5.3.4, 27.5.5.3.4.1, 27.5.5.3.5, 29.10.8.1.1(4), A.26.6.5.2, A.27.5.5.1.4 *see also* Radio alarm repeater station receiver (RARSR); Repeater station; Wireless repeater
  Definition, 3.3.13
Alarm responses, 10.9.1
  Definition, 3.3.250.1, A.3.3.250.1
Alarm service (definition), 3.3.14
Alarm signals, 10.7 to 10.15, A.10.7.3 to A.10.15.10.7 *see also* Fire alarm signals; Supervisory signals; Trouble signals
  Central station service, 26.3.8.3.1, A.26.3.8.3.1(1)
  Coded, 10.14.4
  Content, 26.2.3
  Control units, interconnected, 23.8.2.7.1
  Deactivation, 10.11.8, 10.12, 24.5.13.5, 24.5.25.1, A.10.12
  Definition, 3.3.263.1, A.3.3.263.1
  Distinctive, *see* Distinctive signals
  Ducts, detectors in, 21.7.4
  Elevator system, output signals to 21.6.2.5, A.21.6.2.5
  Emergency communications systems, 24.11.3, A.24.11.3
  End-to-end communication time, 12.3.3, 12.3.6, 26.6.3.8, A.12.3.3, A.12.3.6(1) to A.12.3.6(5), Table A.26.6.1
  Household signaling systems, 29.10.9.6, 29.10.9.7, A.29.10.9.7
  Low-power radio (wireless) systems, 23.16.3, A.23.16.3.1
  Off-premises, 23.3.3.1(12), 23.12, A.23.12.4
  Positive alarm sequence, *see* Positive alarm sequence
  Power supervisory devices, operation of, 10.6.9.4
  Proprietary supervising system, 26.4.4.1 to 26.4.4.4, 26.4.6.1.6.1, A.26.4.4.1.3, A.26.4.4.3
  Public emergency alarm reporting systems, 27.5.2.2.2
  Remote supervising station system, 26.5.1.3, 26.5.1.4, 26.5.1.5.2, 26.5.3.1, 26.5.4, 26.5.6.3.1, 26.5.7, 26.5.8.1, A.26.5.3.1.4
  Response to 10.9.1
  Secondary power, operation on, 10.6.7.1.1, 26.6.3.13, A.26.6.3.13.1
  Supervising station alarm systems, 26.2.1, 26.6.1.2, 26.6.3.8, 26.6.3.11, 26.6.3.14, A.26.2.1.2, A.26.2.1.3(3)
  Wireless, 27.4.3.4, 27.5.5.1.3

Alarm systems, *see* Fire alarm systems; In-building fire emergency voice/alarm communications systems; In-building mass notification systems; Public emergency alarm reporting systems; Supervising station alarm systems
Alarm verification features, Table 14.4.3.2, 23.8.5.4.1, 23.8.5.4.3(3), 26.2.2, A.23.8.5.4.1, A.26.2.2
Definition, 3.3.17
Alert tone, 18.4.1.5, 24.6.1.3, A.18.4.1.5.1, A.18.4.1.5.2, G.2.1
Definition, 3.3.18
Amplifiers, 10.19.1, Table 14.4.3.2, A.10.19.1
Analog initiating devices (sensor)
Definition, 3.3.141.1
Ancillary functions
Definition, 3.3.20, A.3.3.20
Emergency communications systems, 24.3.5, A.24.3.5.2
Annunciation, 10.18, A.10.18.3, A.10.18.5, F.1
Combination systems, 23.8.4.4.3, 23.8.4.5.2
Control units, interconnected, 23.8.2.7.1 to 23.8.2.7.4, A.23.8.2.7.4
Of elevator status, 21.5, A.21.5
Protected premises fire alarm systems, 23.8.5.8.1, 23.8.5.10.2, 23.8.5.10.3
Supervising station communication methods, Table A.26.6.1
Visible zone indication, 10.18.4
Alarm, 10.18.1
Supervisory and trouble, 10.18.2
Zones, 10.18.5, A.10.18.5
Annunciators, *see also* Remote annunciators
Access and location, 10.18.3, A.10.18.3
Control units, interconnected, 23.8.2.7.4, A.23.8.2.7.4
Definition, 3.3.21
Inspection, Table 14.3.1
Testing, Table 14.4.3.2
Apartment buildings, A.29.1.2, A.29.8.1.1 *see also* Household signaling systems
Definition, 3.3.22
Application of code, 1.3
Approved (definition), 3.2.1, A.3.2.1
Area of refuge emergency communications systems, 24.3.7.2(3), 24.3.14.9, 24.10, 24.11.1.2(2), A.24.3.14.9, A.24.10
As-built drawings, *see* Record drawings
Audible notification appliances, 18.4, A.18.4.1.1 to A.18.4.11.4 *see also* Emergency voice/alarm communications; Exit marking audible notification appliances
Alarm signal deactivation (silencing), 10.11.8.1, 10.11.8.2, 10.12.2, 24.5.13.5, 24.5.25.1, A.10.12.2
Area of refuge, stairway, and elevator communication systems, 24.10.9
Audibility, 18.4.1.1 to 18.4.1.4, 18.4.4.1, 18.4.5.1, A.18.4.1.1 to A.18.4.1.3, A.18.4.4.1, A.18.4.5.1, D.2.3.2
Carbon monoxide alarm signals, 18.4.3, 29.10.7.3, 29.10.7.4, 29.10.7.6, 29.10.7.7
Change of status signals, 26.6.6.5(1)
Definition, 3.3.182.1
Distinctive signals, *see* Distinctive signals
Documentation, 7.2.1(10)
Emergency voice/alarm communications, 24.4.8.6, A.24.4.8.6.1, A.24.4.8.6.3
Evacuation signals, 18.4.2, 29.5.1, A.18.4.2.1, A.18.4.2.3, A.29.5.1
Hearing loss, for persons with, 29.5.10.1, A.29.5.10.1
Household signaling systems, 29.5.1, 29.5.4 to 29.5.7, 29.5.10.1, 29.8.2.2, 29.10.7.3, 29.10.7.4, 29.10.7.6, 29.10.7.7, A.29.5.1, A.29.5.5, A.29.5.6, A.29.5.10.1, A.29.8.2.2
Trouble signals, 29.9.2, 29.9.5, 29.9.7, 29.10.6.5
Inspections, Table 14.3.1
Location of appliances, 18.4.9, 18.4.10
Mass notification systems, 24.5.2.10, A.24.5.2.10
Nameplates, 18.3.2.1, 18.3.2.2
Narrow band tone signaling for exceeding masked thresholds, 18.4.7, A.18.4.7
Private mode, 18.4.4.3, 18.4.4.4, 18.4.5, A.18.4.5.1, A.18.4.5.2
Proprietary supervising systems, 26.4.4.2.1.1
Public emergency alarm reporting systems
Alarm receiving equipment, 27.5.2.2.5.1, 27.5.2.2.6, 27.5.2.4.2 to 27.5.2.4.5, 27.5.2.5.7, 27.5.4.2.3, 27.5.4.3.2, 27.5.5.3.7, 27.5.5.3.8
Auxiliary fire alarm systems, 27.6.3.2.3.13
Wired network systems, 27.5.4.4.4
Public mode, 18.4.4, A.18.4.4
Remote supervising station systems, 26.5.1.4, 26.5.1.5, 26.5.4.1
Sleeping areas, 18.4.6, A.18.4.6.1 to A.18.4.6.3(2)
Supervisory signals, 10.14.1, 10.14.2.1, 10.14.5, 10.14.6.1, 10.14.6.2
Testing, Table 14.4.3.2, A.14.4.3.2, F.2.11, F.2.12
Textual appliances, Table 14.3.1, Table 14.4.3.2, 18.8, A.18.8.1.2
Definition, 3.3.182.1.2, A.3.3.182.1.2
Trouble signals, 10.15.3 to 10.15.9, 10.15.10.4, Table 14.4.3.2, A.10.15.9
Household signaling systems, 29.9.2, 29.9.5, 29.9.7, 29.10.6.5
Authority having jurisdiction (definition), 3.2.2, A.3.2.2
Automatic drift compensation, 23.8.5.4.2
Automatic extinguishing systems, *see* Extinguishing systems
Automatic extinguishing system supervisory devices, 17.17.2.2.2, 23.3.3.1(2), 23.8.5.6, 23.8.5.8 to 23.5.10, A.17.17.2.2.2, A.23.8.5.6, A.23.8.5.8
Definition, 3.3.141.2
Automatic fire detectors, *see also* Fire–gas detectors; Heat detectors; Radiant energy–sensing fire detectors; Smoke detectors
Combination, B.3.2.4.3
Definition, 3.3.70.4, A.3.3.70.4
Definition, 3.3.70.2
Fire extinguishing or suppression system operation (definition), 3.3.70.3
Initiating devices, Table 27.6.3.2.2.3
Inspection, Table 14.3.1
Manual fire box, available, 23.8.5.1.2, A.23.8.5.1.2
Other types, 17.11, A.17.11.2
Definition, 3.3.70.14
Sensitivity testing, 14.4.4.3
Signal disposition, 26.2.1.1
Spacing, Annex B
Two fire detectors, operation of, 23.8.5.4.3 to 23.8.5.4.5
Automatic fire extinguishing or suppression system operation (definition), 3.3.70.3
Autonomous control unit (ACU), *see* Control units
Auxiliary alarm boxes, *see* Alarm boxes
Auxiliary alarm systems, 27.6.3, A.27.6.3.1.2 to A.27.6.3.2.2.1(2)(g)
Definition, 3.3.221.1, A.3.3.221.1
Interfaces with public alarm systems, 27.6.3.2.2.2
Types of systems, 27.6.3.2.2, A.27.6.3.2.2.1(1) to A.27.6.3.2.2.1(2)(g)
Average ambient sound level, 18.4.1.1, 18.4.4.1, 18.4.4.5.1, 18.4.5.1, A.18.4.1.1, A.18.4.4.1, A.18.4.5.1
Definition, 3.3.30, A.3.3.30

-B-

Batteries, 10.6.10, A.10.6.10
Box, 27.6.6.9 to 27.6.6.13
Capacity (definition), 3.3.31.1
Charger, 10.6.10.3, 10.6.11.7, A.10.6.10.3.4
Definition, 3.3.31.2
Metering, 10.6.10.5
Monitoring integrity of, 10.6.10.6
Charging, 10.6.10.3, A.10.6.10.3.4
Definition, 3.3.31, A.3.3.31
Engine-driven generators, 10.6.11.7
Float charge, 27.5.2.6.4, 27.5.2.6.5, 27.5.2.8, A.10.6.7.2.1.1, A.10.6.10.3.4, A.14.4.3.2
Definition, 3.3.31.2.1
Fully charged, 10.6.10.3.1, 10.6.10.3.2, Table 14.4.3.2, A.10.6.10.3.4, A.14.4.3.2, D.3.1.7
Definition, 3.3.31.2.2
Household signaling systems, 29.9.1, 29.9.2, 29.9.4(7), 29.9.5, 29.9.7
Inspections, Table 14.3.1
Load test (definition), 3.3.31.3

Location, 10.6.10.2
Low-power radio (wireless) system power, 23.16.2, A.23.16.2
Primary (dry cell), Table 14.3.1, 23.16.2, 29.9.1, A.23.16.2
Definition, 3.3.207
Public emergency alarm reporting systems, 27.5.2.5.1 to 27.5.2.5.4, 27.5.2.8, 27.5.4.3.1, 27.6.6.9 to 27.6.6.13, A.27.5.2.5.1(1) to A.27.5.2.5.1(3)
Rechargeable, 29.9.3, 29.9.5, 29.9.8
Definition, 3.3.31.5
Replacement, 14.4.5.9
Secondary power source, 10.6.6.3.1, 10.6.7.2.1.1, 10.6.7.3.1, 10.6.7.4.1, 29.9.1, 29.9.3, 29.9.4(7), A.10.6.7.2.1.1
State of charge (SOC) (definition), 3.3.31.2.3
Testing, Table 14.4.3.2, A.14.4.3.2
Trickle charge (definition), 3.3.31.2.4
Unit (multi-cell) (definition), 3.3.41.3
Valve-regulated lead acid (VRLA), Table 14.3.1, Table 14.4.3.2, A.10.6.10, A.14.4.3.2
Beam construction (ceiling)
Definition, 3.3.40.1
Detector location, 17.6.3.3.2
Detector spacing, 17.6.3.3.1, 17.7.3.2.4, 29.11.4.6, A.17.7.3.2.4
Box alarms, *see* Alarm boxes
Box batteries, 27.6.6.9 to 27.6.6.13
Box circuits, 27.5.2.5.1, 27.5.2.5.6.2, 27.5.4.1, 27.5.4.2.1, 27.5.4.2.2, 27.5.4.4, 27.7.2.2, A.27.5.2.5.1(1) to A.27.5.2.5.1(3)
Building, *see also* In-building mass notification systems
Emergency radio communication system in, 14.4.10
Wiring inside, 27.7.1.2.3, 27.7.1.6, A.27.7.1.6.2
Building fire alarm command center, 10.14.1(2)
Building fire alarm systems, 23.3.3.1, A.23.3.3.1 *see also* In-building mass notification systems; Protected premises (local) alarm and signaling systems
Definition, 3.3.111.4.1
Building system information units (BSIU)
Control units, located with, 23.8.4.2.2.1 to 23.8.4.2.2.3, A.23.8.4.2.2.2
Definition, 3.3.34
Emergency communications systems, 24.3.11
Burglar alarm systems, 26.6.4.2.2(E)

-C-

Cables
Aerial construction, 27.7.1.2.2, 27.7.1.4
Fiber-optic, 12.2.3.1, Table 14.3.1, Table 14.4.3.2, 27.4.2.1.1, 27.7, A.27.7.1.6.2, A.27.7.3
Inside buildings, 27.7.1.2.3, 27.7.1.6, A.27.7.1.6.2
Leads down poles, 27.7.1.5
Public cable plant, *see* Wired network, public fire alarm reporting system
Underground, 27.7.1.2.2, 27.7.1.3
Call forwarding equipment, 26.6.4.1.5(8), Table A.26.6.1, A.26.6.4.1.5(8)
Carbon monoxide, Annex H
Dangers of, H.1
Emergency responders, information for, H.2
Carbon monoxide alarms, 14.4.5.7, 29.1.2, 29.3.3, 29.7, A.29.1.2, A.29.3.3, A.29.7
Definition, 3.3.11.1
Markings, 29.14.2
Power supplies, 29.9, A.29.9.4(3)
Carbon monoxide alarm signals, 10.7.5, 10.10.3, 18.4.3, 23.8.4.9, 29.5.3, 29.5.6, 29.10.7.3, 29.10.7.4, A.23.8.4.9, A.29.5.3, A.29.5.6
Definition, 3.3.263.2
Priority of, 29.10.7.7
Secondary power supply, use of, 29.9.5(3)
Supervising station alarm systems, 26.2.4, A.26.2.4.1.3
Carbon monoxide detection systems, 1.3.1(2), 14.4.5.7, 14.4.6.5, 17.12, A.17.12.1(1), A.17.12.1(2)
Combination systems, Table 14.3.1, Table 14.4.3.2, 14.4.5.8, 23.8.4.9, 29.10.7, A.23.8.4.9, A.29.10.7.8
Definition, 3.3.35.1
Definition, 3.3.35
Emergency control function interface, HVAC system, 21.7.6
Household systems, Table 14.4.3.2, Chap. 29
Combination systems, 29.10.7, A.29.10.7.8
Definition, 3.3.35.2
Testing, 14.4.8, 29.10.6.11, A.14.4.8.1.3
Installation, 17.12.1, 17.12.6, 17.12.8, 29.3.2, 29.3.3, A.17.12.1(1), A.17.12.1(2), A.29.3.3
Location of detectors, 17.12.1, 17.12.3 to 17.12.5, A.17.12.1(1)
Markings, 29.14.2
Notification appliance deactivation, 10.13
Power supplies, 29.9, A.29.9.4(3)
Protected premises alarm and signaling systems, 23.3.3.1, 23.8.3, 23.8.6.1.2, 23.8.6.1.3, 23.9.2, 23.15.6, A.23.3.3.1
Secondary power supply, 10.6.7.2.3, 10.6.7.2.4, A.10.6.7.2.3
Servicing of, 26.2.4.1.3, 26.2.4.2.2, A.26.2.4.1.3
Carrier (definition), 3.3.36
Carrier system (definition), 3.3.37
Ceiling height
Definition, 3.3.39
Fire development and, B.3.2.3
Ceilings, *see also* Level ceilings; Sloping ceilings; Sloping peaked-type ceiling; Sloping shed-type ceiling; Smooth ceilings
Ambient ceiling temperature, Table 17.6.2.1, 17.6.2.3, A.17.6.2.3
Definition, 3.3.38
Detector location and spacing on, 17.6.3, 17.7.3, 29.8.1.3.1, 29.8.1.3.2, 29.11.3.1 to 29.11.3.4, 29.11.4, A.17.6.3.1.1 to A.17.6.3.6, A.17.7.3.1 to A.17.7.3.7.8, A.29.8.1.3.1, A.29.11.3.1 to A.29.11.3.4(12), A.29.11.4, Annex B
High, 17.6.3.5, A.17.6.3.5.1, A.17.6.3.5.3
Open grid, 17.5.3.1.3
Shapes of (definition) 3.3.260
Stratification below, *see* Stratification
Suspended, 17.7.3.5
Visual notification appliances located on, 18.5.5.3, 18.5.5.4, Table 18.5.5.5.1(b), 18.5.5.5.6 to 18.5.5.5.8, A.18.5.5.4, A.18.5.5.5.6
Ceiling surfaces, *see also* Beam construction (ceiling); Smooth ceilings; Solid joist construction
Girder (definition) 3.3.40.2
Cells, *see also* Batteries
Absorbed glass mat (AGM), A.10.6.10
Definition, 3.3.41.2.1
Definition, 3.3.41
Gelled electrolyte (gell cell), A.10.6.10
Definition, 3.3.41.2.2
Primary (dry)
Definition, 3.3.41.1
Starved electrolyte, A.10.6.10
Definition, 3.3.41.2
Unit (multi-cell)
Definition, 3.3.41.3
Valve-regulated lead acid (VRLA)
Definition, 3.3.41.4, A.3.3.41.4
Central station, *see* Central supervising station
Central station alarm system, *see* Central station service alarm systems
Central station service, 26.3, A.26.3.2 to A.26.3.8.3.5.3
Contract requirements, 26.3.3
Definition, 3.3.292.1
Documentation, 7.5.9
Indication of, 26.3.4, A.26.3.4
Central station service alarm systems, 26.3, Table A.26.1, A.26.3.2 to A.26.3.8.3.5.3
Definition, 3.3.291.1
Disposition of signals, 26.3.8.3, A.26.3.8.3.1(1) to A.26.3.8.3.5.3
Guard's signal, 26.3.8.3.2
Personnel, 26.3.7
Presignal feature, 23.8.1.1.2(1)
Procedures, 26.3.8, A.26.3.8.3.1(1) to A.26.3.8.3.5.3
Protected premises fire alarm systems, 23.12.1

Record keeping and reporting, 26.3.8.3.5.1, 26.3.9
Remote signals received by, 26.5.3.1.3
Testing and maintenance, 14.2.3.5, 14.4.7, 26.3.8.3.5.1, 26.3.9.2, 26.3.10
Two-way radio frequency (RF) systems, supervision of, 26.6.5.1.6(C)
Central supervising station
Definition, 3.3.290.1
Equipment, 26.3.6, A.26.3.6.6
Facilities, 26.3.5
Household signaling systems, 29.10.9.6
Inspection, 14.4.3.1, A.14.4.3.1
Pathway survivability, emergency communications systems, 24.3.14.11
Presignal feature, use of, 23.8.1.1.2(1)
Certification of personnel, 10.5.1.3, 10.5.1.6, 10.5.2.3, 10.5.2.5, 10.5.3.4, 10.5.3.5.1, 10.5.4.4, 10.5.5.1, 10.5.5.2, 10.5.6.4.2, A.10.5.3, A.10.5.3.4(1) to A.10.5.3.4(3), A.10.5.5.1(2), A.10.5.6.4.2(2), A.10.5.6.4.2(4)
Channels, *see also* Communications channels; Transmission channels
Definition, 3.3.47
Radio (definition) 3.3.47.2, A.3.3.47.2 *see also* Radio frequency
Chemical energy storage systems (definition), 3.3.99.1
Circuit conductors, 27.7.1.1
Circuit interface, *see* Interface; Interface equipment
Circuits, Chap. 12 *see also* Communications circuits; Paths (pathways)
Branch circuits, 10.6.5.1, 10.6.5.2.1, 10.6.5.3, 10.6.7.3.1(2), 10.6.7.4.1, 29.9.4, A.10.6.5.1.2, A.23.6.3.3.3.2, A.23.6.3.6.2
Class, 23.4.3, F.1, F.3
Combination household signaling systems, 29.10.7.6
Definition, 3.3.48
Designations, 23.4.2, A.23.4.2.2
Disconnecting means, 10.6.5.2, 10.6.5.4, 21.4.1, 21.4.3, 21.4.4, A.10.6.5.2.2, A.21.4.1, A.21.4.3, A.21.4.4
Elevator shutdown, control circuits for, 21.4.4, 21.4.5, A.21.4.4
Ground connections, 12.2.4, A.12.2.4.3
Identification and accessibility, 10.6.5.2, A.10.6.5.2.2
Identification nomenclature, 12.7, A.12.7
Integrity, 12.6, Table 14.4.3.2, 24.5.25.2(3), A.12.6
Notification appliance, *see* Notification appliance circuits
Protected premises fire alarm systems, 23.4.2, 23.4.3, 27.2.4, A.23.4.2.2
Protection, 10.6.5.3, 23.8.5.11, 27.7.3, A.27.7.3
Public emergency alarm reporting systems
Alarm receiving equipment, 27.5.2.2.2, 27.5.2.2.3.1, 27.5.2.2.3.2, 27.5.2.3, 27.5.2.5, 27.5.4.1, A.27.5.2.5.1(1) to A.27.5.2.5.1(3)
Box, *see* Box circuits
Protection, circuit, 27.7.3, A.27.7.3
Public cable plant, 27.7, A.27.7.1.6.2, A.27.7.3
Signal transmission facilities, 27.7.2
Remote supervising station system, 26.5.1.5.2
Signaling lines, 23.4.2, 23.8.2.6, A.23.4.2.2
Status changes, display and recording of, 26.6.6.1, A.26.6.6.1
Testing, Table 14.4.3.2, 14.4.7, Annex F
Wiring diagrams, Annex F
Cloud chamber smoke detection (definition), 3.3.276.1
Code
Adoption requirements, 1.7
Definition, 3.2.3, A.3.2.3
Deviations from adopted code record of completion, Fig. 7.8.2(f), Fig. A.7.8.2(1)(f)
Sample ordinance, Annex E
Coded
Alarm signals, 10.11.4, 10.11.5, 10.14.4, A.10.11.4
Definition, 3.3.51, A.3.3.51
Retransmission procedures, 26.4.6.1.3.3, A.26.4.6.1.3.3
Supervisory signals, 10.14.3, 10.14.4
Combination carbon monoxide detection systems, *see* Carbon monoxide detection systems
Combination detectors, 14.4.5.8, 17.7.6.1.1, 17.9.1, 17.9.2, B.3.2.4.3
Definition, 3.3.70.4, A.3.3.70.4
Testing, Table 14.4.3.2, F.2.5, F.2.6
Combination emergency communications systems, *see* Emergency communications systems—combination
Combination fire alarm and guard's tour box, 17.15.3
Definition, 3.3.12.2
Combination fire alarm systems, 21.2.3, 23.3.3.1(13), 23.8.2.1 to 23.8.2.8, 23.8.4, 29.10.7, A.23.8.2.7.4, A.23.8.4.1 to A.23.8.4.10, A.29.10.7.8
Definition, 3.3.111.1, A.3.3.111.1
Inspections, Table 14.3.1
Testing, Table 14.4.3.2
Command center, emergency, *see* Emergency communications systems—emergency command center
Common talk mode, *see* Talk mode
Communications center
Alarm boxes, transmission from, *see* Alarm boxes
Alarm processing equipment, 27.5, A.27.5.2.5.1(1) to A.27.5.5.3.3
Alarm signal verification, 26.2.2, A.26.2.2
Circuit protection, 27.7.3, A.27.7.3
Definition, 3.3.57, A.3.3.57
Indicator of signal transmitted to 27.6.1.4, A.27.6.1.4
Power supply messages, transmission of, 27.6.6.10.5, 27.6.6.10.6, 27.6.6.11.4.1, 27.6.6.11.5, 27.6.6.13.2.1
Public emergency alarm reporting systems wireless network, 27.4.3.6
Remote supervising stations, transmission from, 26.5.3.1.1
Retransmission to 24.4.6.1.5, 26.2.1.2, 26.2.1.3, 26.3.2(3), 26.3.6.6, 26.3.8.3.1(1), 26.4.6.1.3.3, 26.5.1.3, 26.5.4.4, 26.5.6.3.1(1), 27.5.2.1.2, 27.5.2.1.3, 29.10.8.1.1(4), Table A.26.1, A.26.2.1.2, A.26.2.1.3(3), A.26.3.6.6, A.26.3.8.3.1(1)
Communications channels, 26.4.6.1.3, A.26.4.6.1.3.3
Definition, 3.3.47.1
Communications circuits
Definition, 3.3.59
Emergency voice/alarm communications, 24.4.8.6, A.24.4.8.6.1, A.24.4.8.6.3
In-building mass notification systems, 24.5.4, A.24.5.4.1
Pathway survivability, 24.3.14, A.24.3.14.3, A.24.3.14.9
Communications cloud (definition), 3.3.60
Compatibility, 10.3.3, 23.2.2.1.2, A.10.3.3, A.23.2.2.1.2, Table A.26.1, F.1
Completion, records of, *see* Records
Completion documentation, 7.5, A.7.5.1 to A.7.5.8
Computer systems
Alarms and supervisory signals, 26.2.8, 26.3.6.3
Communications center, 27.5.2.9
Control, 23.2.2, A.23.2.2.1.1 to A.23.2.2.2
Distributed recipient mass notification systems, A.24.7.5
Condition, *see also* Abnormal (off-normal) condition; Alarm condition; Normal condition; Supervisory condition; Trouble condition
Definition, 3.3.61, A.3.3.61
Pre-alarm, 10.8.2.1
Definition, 3.3.61.1.2, A.3.3.61.1.2
Conductors
Circuit, 27.7.1.1
Testing, Table 14.4.3.2
Contiguous property, 26.4.2.2
Definition, 3.3.213.1
Control circuits, 10.17, 21.2.4, A.10.17.2, A.21.2.4
Control equipment, *see also* Local operating console (LOC)
Elevators, A.21.4.4
Emergency voice/alarm communications systems, 24.4.5, A.24.4.5.1
Household signaling systems, A.29.6.3(2), A.29.10.7.8

In-building mass notification systems, 24.5.2.3 to 24.5.2.10, 24.5.12, A.24.5.2.3 to A.24.5.2.10, A.24.5.12.1
Inspections, Table 14.3.1
Software and firmware control, 23.2.2, A.23.2.2.1.1 to A.23.2.2.2
Testing, 14.4.2.1 to 14.4.2.3, Table 14.4.3.2
Control units, *see also* Fire alarm control units
Area of refuge, stairway, and elevator communications systems, 24.10.2 to 24.10.5, 24.10.7, 24.10.8, A.24.10.2 to A.24.10.5
Audible signals on, 10.10.4, 10.11.8.1, 10.11.8.2, A.10.10.4
Autonomous control unit (ACU), 24.5.1.2(1), 24.5.11
Definition, 3.3.63.1, A.3.3.63.1
Carbon monoxide detection systems, 29.7, A.29.7
Definition, 3.3.63
Diagrams, 7.4.7
Elevators, 21.4.5, 21.4.6, A.21.4.4
Emergency communications control unit (ECCU), 24.3.10, 24.11.2, A.24.3.10
Definition, 3.3.63.2
Household signaling systems, 29.10.6, A.29.10.6.2
In-building mass notification systems, 24.5.1.2(1), 24.5.1.2(6), 24.5.1.3, 24.5.8
Testing, Table 14.4.3.2
Visible signals on, 10.11.8.1, 10.11.8.2
Wireless (definition) 3.3.63.4 *see also* Radio alarm system (RAS)
Control valves, 17.17.1
Converters, 27.5.2.5.1(3), 27.5.2.6, A.27.5.2.5.1(3)
Corridors, visual notification appliances located on, 18.5.5.6, A.18.5.5.6
Coverage, detector, 17.5.3, A.17.5.3

-D-

DACR, *see* Digital alarm communicator receiver (DACR)
DACS, *see* Digital alarm communicator system (DACS)
DACT, *see* Digital alarm communicator transmitter (DACT)
Dampers, smoke and fire, 21.7.2, A.21.7.2
DARR, *see* Digital alarm radio receiver (DARR)
DARS, *see* Digital alarm radio system (DARS)
DART, *see* Digital alarm radio transmitter (DART)
Day-care homes, A.29.1.2, A.29.8.1.1 *see also* Household signaling systems
Definition, 3.3.64
Dedicated fire alarm control units, *see* Fire alarm control units
Dedicated function fire alarm system, *see* Fire alarm systems
Deficiencies, 14.2.2.2
Definition, 3.3.67
Definitions, Chap. 3
Delinquency signal, 23.14.4, 23.14.7, 26.6.6.2, A.26.6.6.2(4)
Definition, 3.3.263.3
Design, fire alarm systems, 10.4, A.10.4.1 to A.10.4.5, Table A.26.1, Annex B
Documentation, 7.3, A.7.3.1 to A.7.3.9.1
Emergency communications systems, 24.3.9, 24.4.2.2.1, 24.4.8.6.1, 24.5.3.2, 24.5.22.3.2, 24.6.9, 24.9.2, A.24.3.9, A.24.4.8.6.1, A.24.6.9
Performance-based, *see* Performance-based design
Protected premises alarm systems, 23.4.1, Annex C
Public emergency alarm reporting systems, 27.2.1, A.27.2.1, A.27.2.3
Smoke detectors, 17.7.1.1 to 17.7.1.3, A.17.7.1.1 to A.17.7.1.3
Design professional (definition), 3.3.69, A.3.3.69
Detection
Abnormal condition, 10.8.1
Alarm condition, 10.8.2
Normal condition, 10.8.2.4
Pre-alarm condition, 10.8.2.1
Supervisory condition, 10.8.2.2
Trouble condition, 10.8.2.3
Detection devices, 23.8.5.4, A.23.8.5.4.1, A.23.8.5.4.6.3
Detectors, *see also* Automatic fire detectors; Carbon monoxide detection systems; Combination detectors; Heat detectors; Multi-criteria detectors; Multi-sensor detectors; Smoke detectors
Definition, 3.3.70
Design documentation, 7.3.5
In ducts, *see* Ducts, detectors in
Inspection, Table 14.3.1
Positive alarm sequence, use of, 23.8.1.2, A.23.8.1.2.1.1(6), A.23.8.1.2.1.2
Device (Class N), 21.2.6, 23.6.2, 23.8.2.6.3, A.12.3.6(1), A.12.3.6(5), A.23.6.2
Definition, 3.3.71, A.3.3.71
Digital alarm communicator receiver (DACR), 26.6.4.1.2, 26.6.4.1.5(8), 26.6.4.2, Table A.26.6.1, A.26.6.4.1.3(C), A.26.6.4.1.5(8), A.26.6.4.2.2(A), A.26.6.4.2.2(D)
Change of status signals, 26.6.6.5(5)
Definition, 3.3.72
Equipment, 26.6.4.2.1
Testing, Table 14.4.3.2
Transmission channel, 26.6.4.2.2, A.26.6.4.2.2(A), A.26.6.4.2.2(D)
Digital alarm communicator system (DACS), 26.6.4, Table A.26.6.1, A.26.6.4.1.1 to A.26.6.4.2.2(D)
Definition, 3.3.73
Power supplies, 10.6.9.2, A.10.6.9.2
Digital alarm communicator transmitter (DACT), 26.6.4.1, A.26.6.4.1.1 to A.26.6.4.1.5(8)
Definition, 3.3.74
Household signaling systems, 29.10.9.10.1 to 29.10.9.10.4
Inspection, Table 14.3.1
Power failure indication, 10.6.9.1.2
Testing, Table 14.4.3.2
Transmission channels, 26.6.4.1.4, A.26.6.4.1.4(B)(6)
Transmission means, 26.6.4.1.4, 26.6.4.1.5, A.26.6.3, A.26.6.4.1.4(B)(6), A.26.6.4.1.5(4), A.26.6.4.1.5(8)
Digital alarm radio receiver (DARR)
Definition, 3.3.75
Testing, Table 14.4.3.2
Digital alarm radio system (DARS), *see also* Digital alarm radio receiver (DARR); Digital alarm radio transmitter (DART)
Definition, 3.3.76
Digital alarm radio transmitter (DART)
Definition, 3.3.77
Inspection, Table 14.3.1
Testing, Table 14.4.3.2
Digital cellular, A.26.6.3
Display, 26.4.4.2.2.1, 26.4.4.2.2.2, 26.4.4.2.2.4, 26.4.4.3, 26.4.4.4, A.26.4.4.3
Definition, 3.3.78
Transmission requirements, 26.6.6, A.26.6.6.1 to A.26.6.6.5
Distinctive signals, 10.10, 23.8.4.7, 29.10.6.7, 29.10.7.3, 29.10.7.4, A.10.10.4, A.23.8.4.7
Audible notification appliances, 18.4.2, A.18.4.2.1, A.18.4.2.3
Evacuation, 18.4.2, A.18.4.2.1, A.18.4.2.3
Distributed recipient mass notification system, *see* One-way emergency communications systems
Documentation, Chap. 7, 10.20, Table A.26.1 *see also* Emergency response plan; Records
Central station service, 26.3.3.2, 26.3.4.1 to 26.3.4.4, A.26.3.4.1, A.26.3.4.2(2)
Completion, 7.5, A.7.5.1 to A.7.5.8 *see also* Records of completion
Design (layout), 7.3, 24.3.9, A.7.3.1 to A.7.3.9.1, A.24.3.9
Emergency communications systems, 24.4.8.1, 24.5.24.2, 24.13, A.24.5.24.2
Forms, 7.8, A.7.8.1.1 to A.7.8.2(2)
Masked thresholds, exceeding, 18.4.7.4
Minimum required, 7.2, A.7.2

Personnel qualifications, 10.5.1.3, 10.5.4.4
Public address system, 24.5.24.2, A.24.5.24.2
Remote supervising station systems, 26.5.2, A.26.5.2.2(1)
Of revisions, 7.5.6.6, A.7.5.6.6.3
Sequence of operations, 7.2.1(4), 7.4.9, 7.5.5.2, A.7.4.9, A.7.5.5.2
Shop drawings, 7.4, A.7.4.1 to A.7.4.9
Testing, inspection, and maintenance, 7.2.1(17), 7.6, 7.7.1.1, 7.8.2, 14.2.5, 14.6, 26.3.9.2, A.7.8.2(1), A.7.8.2(2), A.14.6.1 to A.14.6.2.4
Test signals, 26.3.8.3.5.1
Voice systems, intelligibility of, D.7.3
Door release service, 17.7.5.3.3, 17.7.5.6, 21.9, 23.15.3, A.17.7.5.6.5.1(C)
Doors, *see also* Double doorway
Electrically locked, 21.10, A.21.10.1, A.21.10.3
Fire and smoke, 21.7.2, A.21.7.2
Door unlocking devices, 23.15.4, 24.11.1.2(6)
Dormitories, A.29.1.2, A.29.8.1.1, *see also* Household signaling systems
Definition, 3.3.80
Double doorway, 17.7.5.6.5.3, 17.7.5.6.5.4
Definition, 3.3.81, A.3.3.81
Downlink (definition), 3.3.82
Drawings, record, *see* Record drawings
Dry pipe sprinkler systems, 17.17.2.2.2, A.17.17.2.2.2
Ducts, detectors in, 17.7.1.9, 17.7.4.4, 17.7.4.5, 17.7.5.2.1, 17.7.5.3.1, 17.7.5.3.4, 17.7.5.4.2, 17.7.5.5, 17.7.6.3.4, 21.7.4, A.17.7.1.9, A.17.7.4.4, A.17.7.5.2, A.17.7.5.4.2
Air sampling-type smoke detector, 17.7.3.6.4.1
Inspection, Table 14.3.1
Signal initiation, 23.8.5.4.6, A.23.8.5.4.6.3
Testing, Table 14.4.3.2
Dwelling units, *see also* Household signaling systems; One- and two-family dwellings
Definition, 3.3.83
Detection, required, 29.8.1, A.29.8.1
Fire alarm signals, 29.8.2.2, A.29.8.2.2
Low-power radio (wireless) systems, 29.10.8, A.29.10.8.2.1, A.29.10.8.2.4
Multiple dwelling unit (definition) 3.3.83.1
Protected premises alarm systems interconnected, 23.8.3
Single dwelling unit (definition) 3.3.83.2

-E-

Effective masked threshold, 18.4.7, A.18.4.7
Definition, 3.3.84
Electrical cabinet, air sampling-type detectors for, 17.7.3.6.4.2, A.17.7.3.6.4.2
Electrical conductivity heat detectors (definition), 3.3.70.5
Electrically locked doors, 21.10, A.21.10.1, A.21.10.3
Electrochemical energy storage systems (definition), 3.3.99.2
Electromechanical releasing device, Table 14.3.1, Table 14.4.3.2, Fig. F.3.3
Definition, 3.3.86
Elevators, 21.2.2, 23.15.1
Audible alarm notification appliances, 18.4.4.3
Emergency communications systems, 24.3.7.2, 24.3.14.10, 24.4.8.5, 24.10, 24.11.1.2(3), A.24.10
Fire service access, 21.5, A.21.5
Hoistways, 21.3.3.1, 21.3.3.2, 21.3.6 to 21.3.8, 21.3.14.1(3), 21.3.14.2(3), A.21.3.7, A.21.3.8, A.21.3.14.2(3)
Notification appliances in, 23.8.6.2, A.23.8.6.2
Occupant evacuation, 21.6, 24.3.7.2(6), 24.4.8.5, 24.10, A.21.5, A.21.6, A.24.10
Phase 1 emergency recall operation, 21.3, 23.8.5.1.3, A.21.3
Shutdown, 21.4, A.21.4.1 to A.21.4.4
Ember, B.5.1.4.2, B.5.3.1.3
Definition, 3.3.87, A.3.3.87
Ember detectors, 17.8, A.17.8.1 to A.17.8.5.4
Definition, 3.3.70.21
Spacing, 17.8.3.3, A.17.8.3.3.1 to A.17.8.3.3.6
System design, B.5.3
Ember detector sensitivity, B.5.3.3, B.5.3.4.1
Definition, 3.3.284
Emergency command center, *see* Emergency communications systems—emergency command center
Emergency communications control unit (ECCU), *see* Control units
Emergency communications equipment, Table 14.4.3.2, D.3.2
Emergency communications systems, Chap. 24 *see also* One-way emergency communications systems; Two-way emergency communications systems
Ancillary functions, 24.3.5, A.24.3.5.2
Classification, 1.3.2, 24.3.7, A.24.3.7
Definition, 3.3.90
Emergency control functions, interface with, Chap. 21
Information, command, and control, 24.11, A.24.11
Mass notification systems, 24.12, A.24.12.6.3, A.24.12.6.6
Messages, creation and dissemination of, Annex G
Microphone use, 24.3.2, A.24.3.2
Nonrequired (voluntary) systems, 24.3.4, A.24.3.4
Pathway survivability, 24.3.14, A.24.3.14.3, A.24.3.14.9
Power supplies, 10.6, A.10.6.1 to A.10.6.10.3.4
Public emergency alarm reporting systems, connection to 27.8, A.27.8.1
Record of completion, Fig. 7.8.2(b), Fig. A.7.8.2(1)(b)
Record of inspection and testing, Figs. 7.8.2(k)
Required systems, 24.3.3, A.24.3.3
Stairway communication systems, 24.10, A.24.10
Emergency communications systems—combination, 24.5.1.11, 24.5.11.5, 24.5.11.6, 24.5.23, 24.5.25, A.24.5.23.1
Definition, 3.3.91
Emergency communications systems—emergency command center, 10.14.1(2), 24.11, A.24.11
Definition, 3.3.92, A.3.3.92
Loudspeakers, use of, 24.3.5.2(1)
Mass notification system, 24.5.8, A.24.5.2.2
Secondary power system, 10.6.7.2.1.6
Wide-area mass notification systems, 24.6.4
Emergency control function interface devices, 21.2.4 to 21.2.6, 21.2.8 to 21.2.10, 23.8.2.6.1, A.21.2.4
Definition, 3.3.93, A.3.3.93
Emergency control function interfaces, Chap. 21, 24.5.22.2 *see also* Emergency control function interface devices
Definition, 3.3.146.1.1, A.3.3.146.1.1
Emergency control functions, 14.2.7, Table 14.4.3.2, 23.3.3.1(5), 23.8.2.6.1, 23.8.5.4.4, 23.15, A.14.2.7.1
Definition, 3.3.94, A.3.3.94
Interfaces, *see* Emergency control function interfaces
Status indicators, 10.16, A.10.16.2
Emergency lighting, proprietary supervising station, 26.4.3.4
Emergency response agency (ERA), 29.2.4.1.4(1), A.26.5.3, A.29.10.9.2
Definition, 3.3.95, A.3.3.95
Emergency response facility (ERF), 27.5.2.2.4, 27.5.4.1.6.2, 27.5.5.1.2.1, 27.5.5.1.2.3, 27.7.3.6 *see also* Emergency communications systems—emergency command center
Definition, 3.3.96, A.3.3.96
Emergency response plan, 24.3.12.10, 24.3.13, A.24.3.13
Definition, 3.3.97
Documentation, 7.3.8
Emergency command center, 24.11.1.3, 24.11.1.4, 24.11.2.1, 24.11.3, 24.11.4.2, 24.11.6, A.24.11.1.4, A.24.11.3, A.24.11.6
Mass notification systems

In-building, 24.5.1.7, 24.5.2.2, 24.5.8, 24.5.9.1, 24.5.9.3, 24.5.10, 24.5.13.1 to 24.5.13.4, 24.5.13.6, 24.5.22.1.3(5), 24.5.24.2, A.24.5.2.2, A.24.5.10, A.24.5.13.1, A.24.5.13.6(2), A.24.5.24.2
Wide-area, 24.6.1.2, 24.6.1.3, 24.6.5.3
Emergency service communications center, *see* Communications center
Emergency voice/alarm communications, 23.3.3.1(7), 23.9, A.24.3.10 *see also* In-building fire emergency voice/alarm communications systems (EVACS); Intelligibility
Inspection, Table 14.3.1
Live voice, 14.4.11, 23.9.3, 24.3.1, 24.4.5.7, 24.5.2.2, 24.5.2.8, 24.5.12.9, 24.5.13.2, 24.6.1, A.14.4.11, A.24.3.1.1, A.24.3.1.2, A.24.5.2.2
Localized messaging, 24.5.3.1, A.24.5.3.1
Manual controls, 24.4.5.6
Prerecorded (digital) voice and tone fire alarm systems, 14.4.11, 23.10, A.14.4.11, A.23.10.2
Secondary power system, 10.6.7.2.1.2
Tampering with, A.24.3.5.2
Endpoint (Class N), 12.3.6, 12.3.8, A.12.3.6(1) to A.12.3.6(5), A.12.3.8
Definition, 3.3.98, A.3.3.98
Energy storage systems (ESS), 10.6.4, 10.6.6.3.1, 10.6.6.3.2, A.10.6.4
Chemical energy storage systems (definition) 3.3.99.1
Definition, 3.3.99, A.3.3.99
Electrochemical energy storage systems (definition) 3.3.99.2
Mechanical energy storage systems (definition) 3.3.99.3
Testing, Table 14.4.3.2
Thermal energy storage systems (definition) 3.3.99.3
Enforcement
Requirements, 1.7
Sample ordinance, Annex E
Engine-driven generators, 10.6.4.2, 10.6.5.1.1, 10.6.7.3.1, 10.6.7.4.1, 10.6.7.4.2, 10.6.9.1.6, 10.6.11
Public emergency alarm reporting systems, 27.5.2.7
Testing, Table 14.4.3.2
Engineering guide for automatic fire detector spacing, Annex B
Equivalency to code, 1.5
Error detection/correction, 26.6.3.11
Escape route, 29.6.2, A.29.6.2
Evacuation, 23.8.6.1.1, 23.10.2, A.23.8.6.2, A.23.10.2, C.2.2.1.3
Definition, 3.3.100, A.3.3.100
Distinctive signals, 10.10.7
Occupant evacuation elevators, *see* Elevators
Partial, 24.4.8, A.24.4.8
Positive alarm sequence, use of, 23.8.1.2.1.1, A.23.8.1.2.1.1(6)
Voice, 23.9, 24.4.2, A.24.4.2.2.2
Elevators, 21.6.2.3.3, 21.6.2.6.1 to 21.6.2.6.4, A.21.6.2.3.3, A.21.6.2.6.3, A.21.6.2.6.4
In-building emergency voice/alarm communication systems, 24.4.8, A.24.4.8
Tone preceding and following, 24.3.6.4
Evacuation signals, 18.4.1.5, 23.8.6.2.3, 23.8.6.2.4, 24.4.1.2, 24.4.8.5.1, 29.2, 29.5.1, A.18.4.1.5.1, A.18.4.1.5.2, A.29.2, A.29.5.1 *see also* Fire alarm/evacuation signal tone generator
Control units, interconnected, 23.8.2.7.1
Definition, 3.3.263.4
Distinctive, 18.4.2, A.18.4.2.1, A.18.4.2.3
Evaluavion documentation, 7.3.9, A.7.3.9.1
Executive software, 14.4.2.5
Definition, 3.3.279.1
Exit marking audible notification appliances, 18.4.1.7, 18.4.8, 21.11, 23.15.5, A.18.4.8.1 to A.18.4.8.5, A.21.11
Definition, 3.3.182.1.1
Inspections, Table 14.3.1
Testing, Table 14.4.3.2
Exit plan, 29.6.2, A.29.6.2
Exits
Door release service, 17.7.5.3.3, 17.7.5.6, 23.15.3, A.17.7.5.6.5.1(C)
Door unlocking devices for, 23.15.4
Emergency communications systems, 24.4.8.5.1, 24.4.8.5.2
Notification appliances, exit stair enclosures/exit passageways, 23.8.6.2, A.23.8.6.2
Extinguishers, portable fire, 26.4.3.3
Electronic monitoring devices, Table 14.4.3.2, 17.16, 23.8.4.10, A.23.8.4.10
Definition, 3.3.113
Extinguishing systems, *see also* Waterflow alarms
Abnormal conditions, monitoring of, 23.3.3.1(3)
Automatic operation detectors, 17.13, 17.14, A.17.13.1, A.17.13.2, A.17.14
Definition, 3.3.70.3
Initiating devices and release service, 23.3.3.1(4), 23.8.5.4.4, 23.8.5.7, 23.8.5.10, 23.11, 26.2.1.1, A.23.11.7
Auxiliary fire alarm systems, Table 27.6.3.2.2.3
Inspection, Table 14.3.1
Supervisory devices, *see* Automatic extinguishing system supervisory devices
Testing, 14.2.6, Table 14.4.3.2
Special suppression systems, predischarge notification for, 24.4.7.1, A.24.4.7.1
Supervisory devices and signal initiation, *see* Automatic extinguishing system supervisory devices

-F-

FACP, *see* Fire alarm control units (FACU)
False alarms, *see* Unwanted alarms
Fan, high volume low speed (HVLS), 21.8
Definition, 3.3.132
Fan control, 21.7.2, 21.8, A.21.7.2
Federal Communications Commission, 26.6.2.3.1, 27.4.3.2, Table A.26.6.1
Fiber optic cables, *see* Cables
Field of view (definition), 3.3.106
Fire alarm and guard's tour box, combination, 17.15.3
Definition, 3.3.12.2
Fire alarm boxes, *see* Alarm boxes
Fire alarm control interface (FACI), *see* Interface
Fire alarm control units (FACU), 10.4.4, 10.4.5, 10.14.1(1), 10.14.6.1, 21.2.5, 21.2.6, A.10.4.4, A.10.4.5, F.1
Building system information units, located with, 23.8.4.2.2.1 to 23.8.4.2.2.3, A.23.8.4.2.2.2
Dedicated function, 10.4.6, 21.3.2, 21.4.5, 21.4.6, 23.8.5.5.1, 23.8.5.6.1, A.21.3.2
Definition, 3.3.108.2.1, A.3.3.108.2.1
Definition, 3.3.108, A.3.3.108
Elevators, 21.3.1, 21.3.2, 21.3.14, 21.4.5, 21.4.6, A.21.3.2, A.21.3.14.1 to A.21.3.14.2(3)
Exits, unlocking of, 21.10.3, A.21.10.3
Household signaling systems, 29.10.6.7 to 29.10.6.10, 29.14.3
In-building mass notification systems, 24.5.1.3, 24.5.13.7
Inspections, Table 14.3.1
Master, 10.6.8.2, 10.6.8.3, 24.10.2 to 24.10.8, 26.6.2.1, A.24.10.2, A.24.10.5, A.24.10.7
Definition, 3.3.108.1
Protected premises (local), 23.8.5.4.2, 23.8.5.8.1, 26.4.2.3, 26.4.6.1.3.1, 26.6.6.1, A.26.6.6.1, C.2.2.1.5
Dedicated function, *see* subhead: Dedicated function
Definition, 3.3.108.2
Positive alarm sequence, acknowledgment of, 23.8.1.2.1.1, A.23.8.1.2.1.1(6)
Releasing service, 23.8.5.10
Definition, 3.3.108.2.2
System requirements, 23.8.2, A.23.8.2
Real-time data, transmission of, 23.12.4.1
Remote, 24.4.8.6.4

Software and firmware control, 23.2.2, A.23.2.2.1.1 to A.23.2.2.2
Testing, 14.4.4.2, F.2.1 to F.2.5, F.2.7
Trouble signals, transmission of, 23.12.3
Fire alarm/evacuation signal tone generator, 10.19.1, Table 14.4.3.2, 23.10, 24.4.4, A.10.19.1, A.23.10.2, A.24.4.4.2, A.24.4.4.3 *see also* Alert tone
Definition, 3.3.109
Fire alarm signals, 10.11, A.10.11.1 to A.10.11.6
see also Alarm signals; Fire alarm/evacuation signal tone generator
Combination systems, 29.10.7.2 to 29.10.7.4, 29.10.7.6, 29.10.7.7
Definition, 3.3.263.5, A.3.3.263.5
Distinctive signals, 10.10.1, 10.10.2
Initiation, *see* Alarm boxes; Initiating devices
Keypad signal, activation of, 29.10.9.9
Presignal feature, 23.8.1.1, A.23.8.1.1
Priority of, 10.7.2, 24.5.1.7, 24.5.13.4, 29.10.7.2, 29.10.7.7, A.24.5.7
Secondary power supply, use of, 29.9.5(3)
Fire alarm systems, *see also* Inspections; Maintenance; Testing
Ancillary functions, 24.3.5, A.24.3.5.2
Central station, *see* Central station service alarm systems
Classification, 1.3.1
Combination, 23.3.3.1(13), 23.8.2.1 to 23.8.2.8, 23.8.4, A.23.8.2.7.4, A.23.8.4.1 to A.23.8.4.10
Definition, 3.3.111.1, A.3.3.111.1
Compatibility, 10.3.3, A.10.3.3, Table A.26.1
Dedicated function systems, 23.3.3.2, A.23.3.3.2
Definition, 3.3.111.4.2
Definition, 3.3.111
Design, *see* Design, fire alarm systems
Documentation, *see* Records
Emergency control functions, interface with, Chap. 21
Fundamentals, Chap. 10
Household *see* Household signaling systems
Initiating device, connection to 17.4.5, A.17.4.5
Installation, 10.5.2, 29.3.2, 29.3.3, 29.6.3, 29.11, A.29.3.3, A.29.6.3, A.29.11.2.1 to A.29.11.4.7
Interfaces, *see* Interface equipment
Municipal (definition) 3.3.111.3
Notification appliances, *see* Notification appliances
Power supply, *see* Power supplies
Protected premises, *see* Protected premises (local) alarm and signaling systems
Fire command center, *see also* Emergency communications systems—emergency command center
Definition, 3.3.112, A.3.3.112
Fire doors, 21.7.2, A.21.7.2
Fire emergency voice/alarm communications system, *see* Emergency communications systems
Fire extinguisher electronic monitoring devices, 17.16, 23.8.4.10, A.23.8.4.10
Definition, 3.3.113
Firefighter's Smoke Control Station (FCFS), 21.7.7, 24.11.1.2(6)
Fire–gas detectors, Table 14.4.3.2
Definition, 3.3.70.6
Fire growth, B.2.3.1.4.1, B.2.3.2.1.2, B.2.3.2.3, B.3.2.6
Fire models
Computer, B.6
Detector response, B.5.1.6
Fire pumps
Monitoring, 23.8.5.9.1, 23.8.5.9.2
Signal initiation, 23.8.5.9
Fire service access elevators, 21.5, A.21.5
Fire service communications center, *see* Communications center
Fire wardens, 24.8.4, 24.8.13
Definition, 3.3.114
Fire warning equipment, 29.2.1, 29.3.2 *see also* Heat detectors; Household signaling systems; Smoke detectors
Definition, 3.3.115
Evacuation signals, 29.5.1, A.29.5.1
Fixed-temperature detectors, 14.4.4.5, 14.6.2.2, 17.6.2.1, 17.6.2.2.1.1, 17.6.2.3.1, 17.7.6.1.1, 29.10.4.2, A.29.10.4.2
Definition, 3.3.70.7, A.3.3.70.7
Spacing, B.3.2.4.2, B.3.2.4.3, B.3.3.1
Test methods, Table 14.4.3.2
Flame, B.5.1.4.1, B.5.2.1.1
Definition, 3.3.118
Flame detectors, 17.8, A.17.8.1 to A.17.8.5.4
Definition, 3.3.70.8, A.3.3.70.8
Spacing, 17.8.3.2, A.17.8.3.2.1 to A.17.8.3.2.6
System design, B.5.2
Video image flame detection, *see* Video image flame detection (VIFD)
Flame detector sensitivity, B.5.2.1, B.5.2.3, B.5.2.4
Definition, 3.3.120
Floor plan drawings, 7.4.5
Follow-up program, 26.3.4, A.26.3.4
Frequency
Annual (definition) 3.3.121.5
Definition, 3.3.121
Monthly (definition) 3.3.121.2
Quarterly (definition) 3.3.121.3
Semiannual (definition) 3.3.121.4
Weekly (definition) 3.3.121.1
Fuel, 10.6.11.6

-G-

Gas detectors, 7.3.5.4, 17.10, A.17.10.2.4
Definition, 3.3.70.9
Gateway, 23.8.2.6.2
Definition, 3.3.122
Generators, *see* Engine-driven generators
Girders, ceiling (definition), 3.3.40.2
Guard's tour
Equipment inspection, Table 14.3.1
Equipment testing, Table 14.4.3.2
Supervisory service, 23.3.3.1(10), 23.13, 23.14
Suppressed signal system, 23.14, 26.6.4.2.2(E)
Transmitter, 26.6.4.2.2(F)
Guard's tour box and fire alarm system, combination, 17.15.3
Definition, 3.3.12.2
Guard's tour reporting stations, 23.13
Definition, 3.3.124
Guard's tour supervisory signal, 26.3.8.3.2, 26.4.6.1.6.2
Definition, 3.3.263.6, A.3.3.263.6
Guest rooms, 29.8.1.1, A.29.1.2, A.29.8.1.1(1) to A.29.8.1.1(5)
Definition, 3.3.126
Guest suites, 29.8.1.1(5), A.29.1.2, A.29.8.1.1(5)
Definition, 3.3.127

-H-

Hearing loss
Definition, 3.3.128, A.3.3.128
Notification appliances for persons with, 29.5.9, 29.5.10, A.24.4.4.2, A.29.5.10.1 to A.29.5.10.2(1)
Profound
Definition, 3.3.128.1
Notification appliances for persons with, 29.5.10.2, A.24.4.4.2, A.29.5.10.2
Heat alarms, 29.8.2.1.1, A.29.8.2.1.1
Definition, 3.3.129
Installation, 29.1.2, 29.11.4, A.29.1.2, A.29.11.4
Interconnection of, 29.11.2, A.29.11.2.1
Mechanically powered, single-station, 29.5.2, 29.8.2.1.1, A.29.8.2.1.1
Definition, 3.3.129.1
Performance of, 29.10.4, A.29.10.4
Power supplies, household fire alarm systems, 29.9, A.29.9.4(3)
Testing, 29.10.5
Heat detectors, 10.4.5, 10.4.6, 17.5, 17.6, A.10.4.5, A.17.5.2 to A.17.5.3.3, A.17.6.1.1 to A.17.6.3.6
Color coding, 17.6.2.2.1
Correlations, B.3.3.3, B.3.3.4
Coverage, 17.5.3, A.17.5.3
Definition, 3.3.70.10
Design documentation, 7.3.5.1
Electrical conductivity (definition) 3.3.70.5
Elevators, 21.4.1, 21.4.2, A.21.4.1, A.21.4.2

Inspection, testing, and maintenance, Table 14.3.1, Table 14.4.3.2, 14.4.4.5, 14.6.2.2
Installation, 17.4.3 to 17.4.7, 29.3.3, 29.11.4, A.17.4.5 to A.17.4.7, A.29.3.3, A.29.11.4, B.1.3.2
Location, 17.6.3, 29.3.3, 29.11.4, A.17.6.3.1.1 to A.17.6.3.6, A.29.3.3, A.29.11.4
Performance, 29.10.1, 29.10.4, A.29.10.4, B.3
Self-diagnostic, 29.10.1
Spacing, *see* Spacing
Temperature classification, 17.6.2.1, Table 17.6.2.1
Theoretical considerations, B.3.3.2
Heating, ventilating, and air conditioning (HVAC) systems, 17.7.4, 17.7.6.3.4, 17.12.9.1, 21.7, 23.15.2, A.17.7.4.1, A.17.7.4.4, A.21.7.2, B.4.10
High air movement areas, 17.7.6.3, Fig. 17.7.6.3.3.2, A.17.7.6.3.3
High power loudspeaker array (HPLA), 24.6.5 to 24.6.9, A.24.6.7.2, A.24.6.9
Definition, 3.3.131
Secondary power system, 10.6.7.2.1.4
High-rack storage, 17.7.6.2, A.17.7.6.2
High volume low speed (HVLS) fan, 21.8
Definition, 3.3.132
Hold-up alarms, 10.7.8
Hotels, A.29.1.2, A.29.8.1.1, D.3.6.1, D.3.6.3, D.3.6.7 *see also* Household signaling systems
Definition, 3.3.133
Household carbon monoxide detection systems, *see* Carbon monoxide detection systems
Household signaling systems, 17.1.5, Chap. 29 *see also* Carbon monoxide detection systems
Assumptions, 29.6, A.29.6.1 to A.29.6.3
Equipment, 29.6.3, A.29.6.3
Escape route, 29.6.2, A.29.6.2
Occupants, 29.6.1, A.29.6.1
Basic requirements, 29.3, A.29.3.3
Combination system, 29.10.7, A.29.10.7.8
Definition, 3.3.111.2
Detection, 29.8, A.29.8.1 to A.29.8.2.2 *see also* Heat detectors; Smoke detectors
Equipment
Installation, 29.11.5
Performance, 29.10, A.29.10.2 to A.29.10.9.7
Inspection, testing, and maintenance, Figs. 7.8.2(m), 14.4.6, 29.6.3, 29.13, A.14.4.6.3, A.29.6.3
Installation, 29.11, A.29.11.2.1 to A.29.11.4.7
Markings and instructions, 29.14, A.29.14.5(7)
Notification appliances, *see* Notification appliances
Occupant notification, required, 29.8.2, A.29.8.2.1.1, A.29.8.2.2
Optional functions, 29.12
Power supplies, 29.9, A.29.9.4(3)
Remote annunciation, 29.4
Waterflow alarm connected to 29.10.7.8.4
Hunt groups, 26.6.4.2.2, Table A.26.6.1, A.26.6.4.2.2(A), A.26.6.4.2.2(D)
Definition, 3.3.135
Loading capacities, 26.6.4.2.2(D), A.26.6.4.2.2(D)

-I-

Identified (as applied to equipment)
Definition, 3.3.136, A.3.3.136
Immediately (definition), 3.3.137, A.3.3.137
Impairments, 10.21, 14.2.2.2, 24.5.5, A.10.21
Definition, 3.3.138, A.3.3.138
In-building fire emergency voice/alarm communications systems (EVACS), 23.3.3.1(7), 23.9, 24.4, A.24.4 *see also* Emergency voice/alarm communications; Intelligibility
Definition, 3.3.90.1.2
Elevators, occupant evacuation, 21.6.2.3.3, 21.6.2.6, 21.6.2.8, 21.6.2.9.2, A.21.6.2.3.3, A.21.6.2.6, A.21.6.2.8
Monitoring, 10.19, A.10.19.1
Voice evacuation messages, 24.4.2, A.24.4.2.2.2
In-building mass notification systems, 23.8.6, 24.5, A.23.8.6.2, A.23.8.6.3.3, A.24.5 *see also* In-building fire emergency voice/alarm communications systems
Autonomous control unit, 24.5.11
Definition, 3.3.90.1.3
Elevators, occupant evacuation, 21.6.2.3.3, A.21.6.2.3.3
Emergency response plan, 24.5.1.7, 24.5.10, A.24.5.10
Impairments, 24.5.5
Initiating devices, 24.5.9, A.24.5.9.2
Initiation indication, 24.5.8
Inspection, testing, and maintenance, Table 14.3.1, Table 14.4.3.2, 24.5.6
Interfaces, 24.5.10, 24.5.22, 24.5.25, 24.6.13.3, A.24.5.10, A.24.5.22.1.3, A.24.5.22.3.1
Local operating console, *see* Local operating console (LOC)
Notification appliances, 24.5.16 to 24.5.21, A.24.5.18 to A.24.5.20
Notification coverage, 24.5.3, A.24.5.3.1, A.24.5.3.4
Pathway survivability, 24.3.14.4, 24.3.14.5
Priority of signals, 24.5.1.7
Public address systems, 24.5.24, 24.5.25, A.24.5.24.2
Risk analysis for *see* Risk analysis
Secondary power system, 10.6.7.2.1.7
System operation, 24.5.2, A.24.5.2.1 to A.24.5.2.10
System priorities, 24.5.7, A.24.5.7
Voice messages, 24.5.1.6, 24.5.13, A.24.5.13.1, A.24.5.13.6(2)
Volume control, 24.5.15
Wide area mass notification systems, *see* One-way emergency communications systems
Initiating device circuits, 23.4.2, 23.8.5.5.3, 23.8.5.6.3, A.23.4.2.2, A.23.8.5.5.3, A.23.8.5.6.3, F.1
Definition, 3.3.142
Faults, 10.11.7
Performance/capacities, 23.5
Testing, Table 14.4.3.2, A.14.4.3.2, F.2.1 to F.2.8, F.2.14, F.2.15
Initiating devices, 10.12.5, Chap. 17, 23.3.3.1(2) *see also* Automatic fire detectors
Automatic extinguishing system supervisory devices *see* Automatic extinguishing system supervisory devices
Auxiliary fire alarm systems, 27.6.3.2.2.3, 27.6.3.2.3.15
Definition, 3.3.141
Elevator recall for fire fighters' service, 21.3, A.21.3
Elevators, occupant evacuation, 21.6.2.1, 21.6.2.3, 21.6.2.5, A.21.6.2.1.1, A.21.6.2.3.1 to A.21.6.2.3.6, A.21.6.2.5
Elevator shutdown, 21.4, A.21.4.1 to A.21.4.4
Extinguishing system operation, detection of, 17.13, A.17.13.1, A.17.13.2
Fire alarm system, connection to 17.4.5, A.17.4.5
General requirements, 17.4, A.17.4.2.3 to A.17.4.7
Household signaling systems, 29.10.6.7
In-building mass notification systems, 24.5.1.2(5), 24.5.1.6, 24.5.9, A.24.5.9.2
Inspection, Table 14.3.1
Installation, 10.4.7, 17.4, 21.3.6 to 21.3.10, A.17.4.2.3 to A.17.4.7, A.21.3.8 to A.21.3.10
Manual initiation *see* Alarm boxes
Performance-based design, 17.3, A.17.3
Protected premises alarm systems, 23.4.2, 23.8.1.2.1.1, 23.8.5, A.23.4.2.2, A.23.8.1.2.1.1(6), A.23.8.5.1.2 to A.23.8.5.8, C.2.2.2.3
Record of inspection and testing Figs. 7.8.2(i)
Signal disposition, 26.2.1.1
Status changes, display and recording of, 26.6.6.1, A.26.6.6.1
Supervisory signals *see* Supervisory signal initiating devices

Testing, 14.4.2.1, 14.4.2.2, 14.4.2.4(2), Table 14.4.3.2, A.14.4.3.2
Waterflow alarms, *see* Waterflow alarms
Inspection personnel, *see* Personnel
Inspections, 10.3.2, 14.1 to 14.3, A.14.2.1.1 to A.14.3.1
Documentation and records, 7.2.1(17), 7.6, 7.8.2, Figs. 7.8.2(g) to (m), 14.6.2, A.7.8.2(1), A.7.8.2(2), A.14.6.2.4
Emergency communications systems, 24.3.5.3, 24.5.6, 24.11.7
Frequency, 14.3.1 to 14.3.3, Table 14.3.1, 14.4.5.2, A.14.3.1
Household signaling systems, 14.4.6, A.14.4.6.3
Personnel, 10.5.3, 14.2.3.6, A.10.5.3, A.14.2.3.6
Definition, 3.3.200.1
Public emergency alarm reporting systems, 27.3.4
Smoke alarms, 14.4.5.1 to 14.4.5.4, A.14.4.5.3, A.14.4.5.4
Supervising station alarm systems, 26.5.2, 26.5.9, A.26.5.2.2(1)
Visual, 14.3.1, Table 14.3.1, 14.3.5, A.14.3.1
Installation, 1.1.1, 1.2.3, 10.3.2, 10.4, A.10.4.1 to A.10.4.5
Alarm boxes, publicly accessible, 27.6.2.1.11, A.27.6.2.1.11.2
Carbon monoxide detection systems, 17.12.1, 17.12.6, 17.12.8, 29.3.2, 29.3.3, A.17.12.1(1), A.17.12.1(2), A.29.3.3
Circuits and pathways, 12.2.3, A.12.2.3.2 to A.12.2.3.4
Documentation, 7.4, 7.5.2, 7.5.8, 14.6.1.1, 24.3.9.2, A.7.4.1 to A.7.4.9, A.7.5.8
Emergency communications systems, 24.1.1, 24.2.2, 24.3.9.2, 24.5.1, 24.9.1.2, 24.9.2, A.24.5.1
Fire alarm systems, 10.5.2, 29.3.2, 29.3.3, 29.6.3, 29.11, A.29.1.1, A.29.3.3, A.29.6.3, A.29.11.2.1 to A.29.11.4.7
Heat detectors, 29.11.4, A.29.11.4, B.1.3.2
Household signaling systems, 14.4.6.4, 29.1.1, A.29.1.1
In-building mass notification systems, 24.5.1.4
Initiating devices, 17.4.3 to 17.4.7, A.17.4.5 to A.17.4.7
Inspections, 14.2.1.1, 14.3.4, A.14.2.1.1
Notification appliances, visual, 18.5.5.6.1
Protected premises alarm systems, 23.1.1, 23.4.1, A.23.1.1
Public emergency alarm reporting systems, 27.1.1, 27.1.2, 27.2.1, A.27.2.1, A.27.2.3
Smoke detectors *see* Smoke detectors
Supervising station alarm systems, 26.1, 26.5.1.2, A.26.1
Instructions
Area of refuge, stairway, and elevator communication systems, 24.10.10
Household signaling systems, 29.14, A.29.14.5(7)
Manufacturer's published *see* Manufacturer's published instructions
Integrity, Table 14.4.3.2
Circuits, 12.6, Table 14.4.3.2, 24.5.25.2(3), A.12.6
Combination fire alarm systems, 23.8.4.4.1(1), 23.8.4.4.2, 23.8.4.5.1
DACT transmission means, 26.6.4.1.5(7)
Emergency voice/alarm communications systems, 10.19, 24.3.5.2(2), A.10.19.1, A.24.3.5.2
Fire alarm system communications to other systems, 21.2.8, 21.2.11
Household signaling systems, 29.10.6.7, 29.10.8.1.1, 29.11.2.3
Mass notification systems, Table 14.3.1, Table 14.4.3.2
Power supplies, 10.6.3.4, 10.6.9, A.10.6.9.2, A.10.6.9.3
Protected premises fire alarm systems, 23.4, 23.8.5.11.4, A.23.4.2.2
Interconnection, 23.8.3.4
Low-power radio (wireless) systems, 23.16.4
Signaling paths, 23.4.3.2, 27.2.4
Suppression systems, 23.8.5.7.2
Tone-generating equipment, 10.19.1, A.10.19.1
Publicly accessible auxiliary boxes, 27.6.3.2.3.17(A)
Remote alarm receiving equipment, 27.5.3.5
Supervising station fire alarm system transmission technology, 26.6.3.2, Table A.26.6.1
Wireless reporting systems, 27.4.3.4, 27.5.5.3, A.27.5.5.3.3
Intelligibility, 18.4.1.6, 18.4.11, 21.2.11(1), 24.3.1, 24.4.2.2.1, 24.6.5.1, A.18.4.1.6, A.18.4.11, A.24.3.1.1, A.24.3.1.2, A.24.6.5.1(B), Annex D
Definition, 3.3.144
Intelligible (definition), 3.3.145, A.3.3.145
Interconnections, *see also* Paths (pathways)
Household signaling systems, 29.8.2.1.1, 29.10.6.7, 29.10.7.6, A.29.8.2.1.1
In-building mass notification systems, 24.5.1.1
Metallic, 27.7, A.27.7.1.6.2, A.27.7.3
Notification appliances, 18.1.7
Protected premises alarm systems, 23.8.3
Record of completion, Fig. 7.8.2(e), Fig. A.7.8.2(1)(e)
Smoke detectors, 29.11.2, A.29.11.2.1
Status changes, display and recording of, 26.6.6.1, A.26.6.6.1
Interface
Circuit
Definition, 3.3.146.1
Emergency control function interface, *see* Emergency control function interfaces
Signaling line, Table 14.4.3.2
Definition, 3.3.146.1.2
Testing, 14.4.4.4
Emergency communications systems/public alarm reporting systems, 27.8.2
Emergency control function, *see* Emergency control function interfaces
Fire alarm control interface (FACI), 24.5.1.2(3), 24.5.22.1, A.24.5.22.1.3
Definition, 3.3.146.2, A.3.3.146.2
Software and firmware, 23.2.2.1.1, A.23.2.2.1.1
Fire alarm/mass notification, 24.5.10, A.24.5.10
In-building mass notification systems, 24.5.1.2(3), 24.5.1.2(6), 24.5.22, 24.5.25, A.24.5.1.2(6), A.24.5.22.1.3, A.24.5.22.3.1
Inspection, testing, and maintenance, Figs. 7.8.2(l), 14.2.7, Table 14.4.3.2, 14.4.4.4, A.14.2.7.1
Public address system, 24.5.25
Wide area mass notification system, 24.6.11, 24.6.13.3
Interface equipment
Auxiliary and public fire alarm systems, 27.6.3.2.2.2
Inspection, Table 14.3.1
Testing, Table 14.4.3.2, 14.4.4.4
Internet protocol, A.26.6.3
Inverters, 27.5.2.5.1, 27.5.2.6, A.27.5.2.5.1(1) to A.27.5.2.5.1(3)
In-writing (definition), 3.3.139, A.3.3.139
Ionization smoke detection, B.4.7.1, B.4.7.3, B.4.8.1.2
Definition, 3.3.276.2, A.3.3.276.2

-L-

Labeled (definition), 3.2.4
Leg facility, 26.4.4.5.2
Definition, 3.3.148
Level ceilings, 17.7.3.2.4.2, 17.7.3.7.5, A.17.7.3.2.4.2(3), A.17.7.3.2.4.2(4)
Definition, 3.3.38.1
Life safety network, 21.2.11
Definition, 3.3.150
Line-type detectors, 17.6.3.1.3.2, Table 17.6.3.5.1, 17.6.3.5.2
Definition, 3.3.70.11
Listed
Definition, 3.2.5, A.3.2.5

Detectors, 17.5.1, 17.6.1.4, 17.7.1.8, 17.7.1.9, A.17.7.1.8, A.17.7.1.9
Carbon monoxide, 17.12.2, 17.12.6
Equipment, 10.3.1, 10.3.3, 23.8.4.4.1(4), A.10.3.3
Household signaling systems, 29.3.1, A.29.6.3
Mass notification system control units, 24.3.10, A.24.3.10
Notification appliances, 18.3.1, 24.5.1.3, 24.5.9.2 to 24.5.9.4, A.24.5.9.2
Speakers, 24.3.1.2, A.24.3.1.2
Supervising station alarm systems, Table A.26.1
Living areas, 29.8.1.1(5), 29.8.1.1(6), 29.8.1.2, A.29.1.2, A.29.8.1.1(5)
Definition, 3.3.152
Loading capacities
Definition, 3.3.153
Digital alarm communicator receiver (DACR) hunt groups, 26.6.4.2.2(D), A.26.6.4.2.2(D)
One-way private radio alarm systems, 26.6.5.2.6
Supervising station communication methods, Table A.26.6.1
System unit, 26.6.3.7
Two-way radio frequency (RF) multiplex systems, 26.6.5.1.5, Table 26.6.5.1.5(B)
Local energy type auxiliary fire alarm system, 27.6.3.2.2.1(1), A.27.6.3.2.2.1(1)
Definition, 3.3.221.1.1
Local operating console (LOC), 24.5.1.2(2), 24.5.1.10, 24.5.2.5, 24.5.11.3, 24.5.12, A.24.5.2.5, A.24.5.12.1
Definition, 3.3.155, A.3.3.155
Mounting of controls, 24.5.14, A.24.5.14
Locked doors, electrically, 21.10, A.21.10.1, A.21.10.3
Lodging or rooming houses, A.29.1.2, A.29.8.1.1 *see also* Household signaling systems
Definition, 3.3.156
Loop start telephone circuit, 26.6.4.1.1(B)
Definition, 3.3.297.1
Loss of power
Definition, 3.3.157
Trouble signals, 10.6.9.1.1, 10.15.2
Loudspeakers, 18.8.1, 23.8.4.6, 24.4.2.2.1, 24.4.6, 24.4.8.5, A.18.8.1.2, A.24.4.2.2.2, A.24.4.6.1, F.1 *see also* High power loudspeaker array (HPLA)
Amplifiers, monitoring of, 10.19.1, A.10.19.1
In-building mass notification systems, 21.6.2.6.4, 24.5.4, A.21.6.2.6.4, A.24.5.4.1
Intelligibility requirements, 24.3.1.2, A.24.3.1.1, A.24.3.1.2
Tone signals, transmission of, 23.10.4
Low-power radio transmitters/transceivers, Table 14.4.3.2, 23.16, 29.9.3(5), 29.10.8, A.23.16, A.29.10.8.2.1, A.29.10.8.2.4, Fig. F.3.14(b)
Definition, 3.3.158

-M-

Maintenance, 10.3.2, 14.1, 14.2.2, 14.2.3, 14.5, A.14.2.2.1.2, A.14.2.3.1, A.14.2.3.6
Carbon monoxide detection systems, 26.2.4.1.3, 26.2.4.2.2, A.26.2.4.1.3
Central station service alarm systems, 26.3.9.2, 26.3.10, Table A.26.1
Definition, 3.3.159
Documentation and records, 7.2.1(16), 7.6, 14.2.5, 14.6.2, A.14.6.2.4
Emergency communications systems, 24.11.7
Engine-driven generators, 10.6.11.4
Household signaling systems, 14.4.6.2, 29.6.3, 29.13, A.29.6.3
In-building mass notification systems, 24.5.1.4, 24.5.6
Personnel, 10.5.3, 14.2.3.6, A.10.5.3, A.14.2.3.6
Proprietary supervising station alarm systems, 26.4.1.2, 26.4.7.2, 26.4.8, Table A.26.1
Protected premises fire alarm systems, Table A.26.1
Public emergency alarm reporting systems, 27.2.1, 27.3, A.27.2.1, A.27.2.3
Smoke alarms, 14.4.5, A.14.4.5.3, A.14.4.5.4
Supervising station alarm systems, 26.3.2(5), 26.3.3, 26.5.1.2, 26.5.2, 26.5.8.2, 26.5.9, 26.6.7, Table A.26.1, A.26.5.2.2(1)
Malicious alarms, 10.22(1)
Definition, 3.3.314.1
Managed facilities-based voice network (MFVN), 26.6.4.1.1, 26.6.4.1.5(3), A.26.6.4.1.1
Definition, 3.3.161, A.3.3.161
Manual alarm boxes, *see* Alarm boxes
Manual controls, status indicators for, 10.16.1
Manual operation, mass notification system, 21.6.2.1, 21.6.2.3, 21.6.2.4, 24.5.1.5, 24.5.2.7, 24.5.2.9, 24.5.9.4 to 24.5.9.6, 24.5.12.8, 24.5.13.2, A.21.6.2.1.2, A.21.6.2.3.1 to A.21.6.2.3.6, A.21.6.2.4
Manufacturer's published instructions, 7.2.1(6), 7.5.3(1), 10.3.2, 14.4.5.1, 14.4.5.6, 14.4.5.8, 14.4.5.9, 14.4.6.6, 17.7.1.9, 17.7.6.3.3.3, 17.11.5.1.1, 29.3.2, 29.9.2(2), 29.11.2.1(1), A.7.5.3(1), A.17.7.1.9
Definition, 3.3.163, A.3.3.163
Markings
Air sampling-type smoke detector piping, 17.7.3.6.2.5
Carbon monoxide alarms and detectors, 29.14.2
Elevators, fire service access, 21.5, A.21.5
Heat detectors, 17.6.2.2
Household signaling systems, 29.14, A.29.14.5(7)
Notification appliances, 18.3.3.2, 18.3.3.3, A.18.3.3.2
Masked threshold, *see* Effective masked threshold
Mass notification priority mode, 10.7.3, 10.7.4, 24.5.1.7, A.10.7.3
Definition, 3.3.164, A.3.3.164
Mass notification systems, *see also* In-building mass notification systems
Control units, listing of, 24.3.10, A.24.3.10
Definition, A.3.3.165
Distributed recipient mass notification system (DRMNS), 24.7, A.24.7
Definition, 3.3.90.1.1
Emergency response plan, 24.3.12.10, 24.3.13, A.24.3.13
Inspection, Table 14.3.1
Performance-based design of, 24.12, A.24.12.6.3, A.24.12.6.6
Priority of signals, 10.7.3, 10.7.4, A.10.7.3
Record of inspection and testing, Figs. 7.8.2(j)
Risk analysis for, *see* Risk analysis
Speakers, use of, 24.4.6.2
Testing, Table 14.4.3.2
Wide area mass notification systems, *see* One-way emergency communications systems
Master boxes, *see* Alarm boxes
Master fire alarm control units, *see* Fire alarm control units
McCulloh systems
Inspection, Table 14.3.1
Testing, Table 14.4.3.2, F.3.6
Measurement, units of, 1.6, A.1.6.5
Mechanical energy storage systems (definition), 3.3.99.3
Mechanically powered, single-station heat alarms, 29.5.2, 29.8.2.1.1, A.29.8.2.1.1
Definition, 3.3.129.1
Metallic conductors, testing of, Table 14.4.3.2
Metallic systems and interconnections, 27.7, A.27.7.1.6.2, A.27.7.3
Microwave radio systems, private, Table 14.4.3.2
Monitoring, Table A.26.1
Area of refuge, stairway, and elevator communication systems, 24.10.5, 24.10.6, A.24.10.5, A.24.10.6
Carbon monoxide detection systems, 10.6.7.2.4
Central station service alarm systems, 26.3.3.2

Circuits, 12.6, 24.5.4.1, 24.5.25.2(3), A.12.6, A.24.5.4.1
Combination fire alarm systems, 23.8.4.10, A.23.8.4.10
Control units, 23.8.2.7, 23.8.2.8, A.23.8.2.7.4
Emergency command center, 24.11.1.2(6), 24.11.1.7
Emergency voice/alarm communication systems, 24.3.5.2(2), 24.4.1.1
Fire extinguisher electronic monitoring devices, 3.3.113, 17.16, 23.8.4.10, A.23.8.4.10
Fire pumps, 23.8.5.9.1, 23.8.5.9.2
Fire service access elevators, 21.5, A.21.5
Household signaling systems, 29.10.6.7, 29.10.8.1.1, 29.10.9.10.6, 29.12
For integrity, *see* Integrity
Protected premises fire alarm systems, 27.2.4
Supervising station fire alarm system transmission technology, Table A.26.6.1
Termination of, 10.21.3
Two-way telephone communications service, 24.8.3
Waterflow alarm-initiating devices, 23.8.5.5.1
Wireless reporting systems, 27.5.5.3
Motor generators, 27.5.2.5.1(3), 27.5.2.5.3, 27.5.2.5.4, 27.5.2.6, A.27.5.2.5.1(3) *see also* Engine-driven generators
Multi-criteria detectors, 17.9.1, 17.9.3
Definition, 3.3.70.12, A.3.3.70.12
Testing, Table 14.4.3.2
Multiple buildings, supervising station systems, 26.2.6
Multiple dwelling unit (definition), 3.3.83.1 *see also* Apartment buildings
Multiple emergency communications control units, 24.11.2.6
Multiple-station alarm, 17.1.5, Chap. 29
Carbon monoxide, 29.7, A.29.7
Combination systems, 29.10.7.8, A.29.10.7.8
Definition, 3.3.170
Inspection, testing, and maintenance, Figs. 7.8.2(m), Table 14.4.3.2, 14.4.5, 29.10.5, A.14.4.5.3, A.14.4.5.4
Interconnection, 29.11.2.2, 29.11.2.3
One- and two-family dwelling units, 29.8.1.1, A.29.8.1.1(1) to A.29.8.1.1(5)
Visual notification appliance with, 29.9.6
Waterflow alarm connected to 29.10.7.8.4
Multiple-station alarm devices
Definition, 3.3.171
Listed, 29.3.1
Multiplexing (definition), 3.3.172 *see also* Active multiplex systems; Two-way emergency communications systems
Multi-sensor detectors, 17.7.6.1.1, 17.9.1, 17.9.4
Definition, 3.3.70.13, A.3.3.70.13
Testing, Table 14.4.3.2
Municipal fire alarm (street) boxes, *see* Alarm boxes
Municipal fire alarm systems, *see* Fire alarm systems; Public emergency alarm reporting systems

-N-

Nameplates, fire alarm systems, 18.3.2
Net-centric alerting system (NCAS), 24.7.4, A.24.7, A.24.7.6
Definition, 3.3.176
Network architecture, 24.7.4
Definition, 3.3.178
Networks, *see* Wired network; Wireless network
911 public safety answering point, 26.3.6.6.1
Noncontiguous property, 26.4.2.2
Definition, 3.3.213.2
Nonrequired
Definition, 3.3.180, A.3.3.180
Detectors, 17.5.3.3, A.17.5.3.3
Protected premises fire alarm systems and components, 23.3.2, A.23.3.2
Nonrestorable initiating device (definition), 3.3.141.3
Normal condition, 10.3.4, 10.8.2.4, Table 14.3.1, 14.4.4.5.5, 26.2.4.1.4(3), 26.2.5.2, 27.6.5.1.2, 29.9.1, 29.9.3, 29.13.2, A.27.6.3.2.2.1(2), A.29.10.9.1
Definition, 3.3.61.2
Notification appliance circuits, 10.4.5, 10.17, 23.4.2, 23.7, 23.8.6.4, A.10.4.5, A.10.17.2, A.23.4.2.2
Definition, 3.3.183
Pathway survivability, 24.3.14, A.24.3.14.3, A.24.3.14.9
Testing, Table 14.4.3.2, A.14.4.3.2, F.2.5, F.2.6, F.2.9 to F.2.13
Notification appliances, Chap. 18, C.2.2.2.3, F.1 *see also* Exit marking audible notification appliances; Mass notification systems
Activation of, 23.3.3.1(6)
Positive alarm sequence, use of, 23.8.1.2.1.1, A.23.8.1.2.1.1(6)
Turning off activated system, 29.10.6.6
Audible signals, *see* Audible notification appliances
Carbon monoxide detection systems, 18.4.3
Connections, 18.3.6, A.18.3.6
Definition, 3.3.182
Documentation
Design documentation, 7.3.4, A.7.3.4.1
Minimum required, 7.2.1(10), 7.2.1(11)
Record of inspection and testing, Figs. 7.8.2(h)
In elevator cars, 23.8.6.2, A.23.8.6.2
In exit stair enclosures and exit passageways, 23.8.6.2, A.23.8.6.2
Hearing loss, for persons with, 29.5.9, 29.5.10, A.29.5.8, A.29.5.10.1 to A.29.5.10.2(1)
Household signaling systems, 29.5, 29.8, A.29.5.1 to A.29.5.10.2(1), A.29.8.1 to A.29.8.2.2
Integrity, monitoring for, 29.10.6.7
Optional functions, 29.12
Power supplies, 29.9.6
Testing, 29.11.2.4
In-building mass notification systems, 24.5.1.2(4)
Inspection, Table 14.3.1
Interconnection of appliances, 18.1.7
Mounting, 18.3.5
Nameplates, 18.3.2
Physical construction, 18.3.3, A.18.3.3.2
Power panel record of completion, Fig. 7.8.2(d)
Protection, 18.3.4, A.18.3.4
Requirements, 18.1, A.18.1
Secondary power supply, 10.6.7.2.1, A.10.6.7.2
Supervisory, 10.15.10.4, F.2.11, F.2.12
Supplementary visible signaling method, 18.7
Testing, 14.4.2.1, 14.4.2.2, Table 14.4.3.2, A.14.4.3.2, F.2.9
Textual appliances
Audible, 18.8, A.18.8.1.2
Visual, 18.9, A.18.9
Trouble, 10.15.10, A.10.15.10.7
Visual signals, *see* Visual notification appliances
Notification before testing, 14.2.4, A.14.2.4
Notification zones, *see* Zones
Nuisance alarms, 10.22(2), 14.4.4.3.3.1, 14.4.4.3.3.2, 23.8.5.4.1(1) *see also* Alarm verification features; Unwanted alarms
Definition, 3.3.314.2, A.3.3.314.2

-O-

Occupant evacuation elevators, *see* Elevators
Occupant notification, 23.8.6.1 *see also* Emergency voice/alarm communications; Evacuation; Mass notification systems; Relocation; Voice/alarm signaling service
Documentation, 7.2.1(10)
Occupiable area (definition), 3.3.187
Occupiable (definition), 3.3.186, A.3.3.186

Octave band
Definition, 3.3.188, A.3.3.188
One-third octave band (definition), 3.3.188.1
Off-hook, Table 14.4.3.2, 24.8.7 to 24.8.10, 26.6.4.1.3, Table A.26.6.1, A.26.6.4.1.3
Definition, 3.3.189
One- and two-family dwellings, 29.8.1, A.29.8.1, A.29.8.1.1 *see also* Household signaling systems
One-third octave band (definition), 3.3.188.1
One-way emergency communications systems, *see also* In-building fire emergency voice/alarm communications systems (EVACS); In-building mass notification systems
Classification as, 1.3.2(1), 24.3.7, A.24.3.7
Definition, 3.3.90.1
Distributed recipient mass notification system (DRMNS), 24.7, A.24.7.1
Definition, 3.3.90.1.1
Messages for, 24.3.6, A.24.3.6.1 to A.24.3.6.3
Public emergency alarm reporting systems, 27.4.3.5(1)
Wide-area mass notification systems, 10.6.7.2.1.4, 10.6.7.2.1.6, 24.6, A.24.6
Definition, 3.3.90.1.4
External connections, 24.6.3, A.24.6.3
Layers, 24.3.8, A.24.3.8
Password protection, 24.6.2, A.24.6.2
Pathway survivability, 24.3.14.6
Risk analysis for, *see* Risk analysis
One-way private radio alarm systems, 26.6.5.2, Table A.26.6.1, A.26.6.5.2.2, Fig. F.3.14(d), Fig. F.3.14(e)
Independent receivers, 26.6.5.2.1
Inspection and testing of, 14.4.10
Maximum operating time, 26.6.5.2.2, A.26.6.5.2.2
Supervision, 26.6.5.2.3
System categories, 26.6.5.2.5
Transmission channels, 26.6.4.1.4(A), 26.6.5.2.4
On-hook, Table A.26.6.1
Definition, 3.3.192
On-premises communication equipment, 26.6.3.12, A.26.6.3.12
Operating mode
Private, 18.4.4.3, 18.4.4.4, 18.4.5, 18.6, 18.9.2.1, 23.8.6.1.1, A.18.4.5.1, A.18.4.5.2, A.18.6
Definition, 3.3.193.1
Public, 18.4.4, 18.5, 18.9.2.2, 23.8.5.4.5, 23.8.6.1.1, A.18.4.4, A.18.5
Definition, 3.3.193.2
Operating system software, 23.2.2, A.23.2.2.1.1 to A.23.2.2.2
Operators, *see* Personnel
Other fire detectors, 17.11, A.17.11.2
Definition, 3.3.70.14
Overcurrent protection, 10.6.5.2.4, 10.6.5.5, 10.6.10.4
Ownership
Definition, 3.3.195, A.3.3.195
Inspection, testing, and maintenance, responsibility for, 14.2.3.1 to 14.2.3.4, A.14.2.3.1
Proprietary supervising station systems, protected property, 26.4.2.1, 26.4.2.2
Remote supervising station alarm systems, 26.5.6.3.1 to 26.5.3.3, A.26.5.3.1.4, A.26.5.3.2
Owner's manuals, 7.5.3(1), 7.5.4, A.7.5.3(1)

-P-

Paging systems, 24.4.8.5, 24.11.6, A.24.11.6
Definition, 3.3.196
Partial coverage, heat/smoke detectors, 17.5.3.2, A.17.5.3.2
Paths (pathways), Chap. 12, 24.10.4, F.1 *see also* Interconnections; Signaling paths
Classification, 12.3, 23.4.3, A.12.3
Class N, 23.6.3, 24.3.5.4, A.23.6.3.3 to A.23.6.3.8
Combination systems (non-fire alarm equipment), 23.8.4.4.1, 23.8.4.4.2
Definition, 3.3.197
Documentation, 7.2.1(12), A.7.2.1(12)
Shared pathway designations, 12.5, A.12.5
Pathway survivability, 12.4, 12.7, 24.3.14, A.12.4, A.12.7, A.24.3.14.3, A.24.3.14.9
Definition, 3.3.198
Peaked ceiling types, *see* Sloping peaked-type ceiling
Performance-based design
Documentation, 7.3.7, A.7.3.7
Fire detector spacing, Annex B
Initiating devices, 17.3, A.17.3
Mass notification systems, 24.12, A.24.12.6.3, A.24.12.6.6
Supervising station alarm systems, 26.6.3, A.26.6.3
Visual notification appliances, 18.5.5.7, A.18.5.5.7
Performance-based inspection and testing, 14.2.9, A.14.2.9
Permanent records
System information, 14.6.1, A.14.6.1
Visual record (recording), 27.5.2.2.2, 27.5.2.2.3, 27.5.2.2.5.1, 27.5.4.4.1 to 27.5.4.4.3
Definition, 3.3.199
Personnel, 10.5, A.10.5.3 to A.10.5.6.4.2(4) *see also* Certification of personnel
Central station, 26.3.3, 26.3.7, Table A.26.1
Design professional (definition) 3.3.69, A.3.3.69
Emergency command center, 24.11.1.4, 24.11.1.5, A.24.11.1.4, A.24.11.1.5
Emergency response personnel, 24.12.6.5.2
Inspection personnel, 10.5.3, 14.2.3.6, A.10.5.3, A.14.2.3.6
Definition, 3.3.200.1
One-way private radio alarm system, power failure in, 26.6.5.2.3(C)
Plans examiners and inspectors, 10.5.4
Proprietary supervising station, 26.4.1.2, 26.4.2.1, 26.4.5, Table A.26.1
Public emergency alarm reporting systems, 10.5.6, 27.3.7, A.10.5.6.4.2(2), A.10.5.6.4.2(4)
Remote supervising station systems, 26.5.1.3, 26.5.5, 26.5.6.3.3.2, 26.5.6.3.3.3, Table A.26.1
Service personnel, 10.5.3, 10.5.6.3, 14.2.3.6, A.10.5.3, A.14.2.3.6
Definition, 3.3.200.2
Supervising station operators, 26.2.4.1.4, 26.2.5.2, 26.2.9, 26.3.7, 26.4.3.4.3, 26.4.4.2.1, 26.4.4.3, 26.4.4.5.1, 26.4.5, 26.4.6.1.3.2, 26.4.6.1.4, 26.4.6.1.6.1, 26.4.6.1.6.3, 26.4.6.1.6.4, 26.5.5, 26.5.7, 26.6.4.1.5(7), 26.6.5.1.6(B), 26.6.6.1, 26.6.6.5, A.26.2.5.2.2, A.26.4.4.3, A.26.4.6.1.6.3(5), A.26.6.6.1, A.26.6.6.5
System designers, 7.2.2, 10.5.1, 10.5.6.1, 24.12.2, 24.12.6.3, A.24.12.6.3
Definition, 3.3.200.3
System installers, 10.5.2, 10.5.6.2
Definition, 3.3.200.4
System operators
Definition, 3.3.298
Supervising station, *see* subhead: Supervising station operators
Testing personnel, 10.5.3, 14.2.3.6, 14.2.6.1, A.10.5.3, A.14.2.3.6
Definition, 3.3.200.5
Photoelectric light obscuration smoke detection (definition), 3.3.276.3, A.3.3.276.3 *see also* Projected beam-type detectors
Photoelectric light-scattering smoke detection (definition), 3.3.276.4, A.3.3.276.4 *see also* Spot-type detectors
Plans examiners and inspectors, 10.5.4
Plant (definition), 3.3.203
Plenums, detectors in, 17.7.4.2, 17.7.4.4, 17.7.4.5, 17.7.6.3.4, A.17.7.4.4
Pneumatic rate-of-rise tubing heat detectors, Table 14.4.3.2, Table 17.6.3.5.1, 17.6.3.5.2
Definition, 3.3.70.15
Poles, leads down, 27.7.1.5

Positive alarm sequence, 23.8.1.2, 24.4.3, A.23.8.1.2.1.1(6), A.23.8.1.2.1.2
Definition, 3.3.205
Power supplies, 10.6, A.10.6.1 to A.10.6.10.3.4 *see also* Batteries; Loss of power
Central station alarm systems, 26.3.6.4
Common-current systems, grounded, 27.5.4.3
Constant-current systems, 27.5.4.2
Continuity, 10.6.6, A.10.6.6
Definition, 3.3.206
Emergency communications systems, 24.11.4
Engine-driven generators, *see* Engine-driven generators
Household signaling systems, 29.9, A.29.9.4(3)
Inspection, Table 14.3.1
Low-power radio (wireless) systems, 23.16.2, A.23.16.2
Monitoring, 10.6.3.4, 10.6.9, A.10.6.9.2, A.10.6.9.3
Public emergency alarm reporting systems, *see* Public emergency alarm reporting systems
Record of completion, Fig. 7.8.2(c)
Remotely located
Control equipment, 10.6.8, A.10.6.8.1
Supervising station systems, 26.5.4.2
Secondary (standby), *see* Secondary (standby) power supply
Smoke alarms, 29.9, A.29.9.4(3)
Testing, Table 14.4.3.2
Visual notification appliances, 29.9.6
Pre-alarm condition, 10.8.2.1
Definition, 3.3.61.1.2, A.3.3.61.1.2
Pre-alarm responses, 10.9.2
Definition, 3.3.250.2, A.3.3.250.2
Pre-alarm signals, 10.7.6
Definition, 3.3.263.7, A.3.3.263.7
Distinctive signals, 10.10.1, 10.10.8
Response to 10.9.2
Prerecorded (digital) voice and tone fire alarm systems, 14.4.11, 23.10, 24.3.1.1, 24.5.1.7 to 24.5.1.9, 24.5.2.2, A.14.4.11, A.23.10.2, A.24.3.1.1, A.24.5.2.2
Localized messaging, 24.5.3.1, A.24.5.3.1
Presignal feature, 23.8.1.1, A.23.8.1.1
Pressure supervisory signal-initiating devices, 17.17.2, 21.4.3, A.17.17.2.2.2, A.21.4.3
Pressure tanks supervisory signal-initiating devices, 17.17.2.2.1, 17.17.3.2
Primary batteries (dry cell), 23.16.2, 29.9.1, A.23.16.2
Definition, 3.3.207
Primary trunk facility (definition), 3.3.208
Prime contractor, 26.3.4, A.26.3.4
Definition, 3.3.209
Private operating mode, *see* Operating mode
Private radio systems, Table 14.4.3.2, 26.5.4.4(3) *see also* One-way private radio alarm systems
Profound hearing loss, *see* Hearing loss
Projected beam-type detectors
Definition, 3.3.70.16
Spacing, 17.7.3.7, 17.7.6.3.3.3, A.17.7.3.7, B.4.9
Test methods, Table 14.4.3.2
Property
Contiguous property, 26.4.2.2
Definition, 3.3.213.1
Noncontiguous, 26.4.2.2
Definition, 3.3.213.2
Proprietary supervising station
Definition, 3.3.290.2
Emergency lighting, 26.4.3.4
Equipment, 26.4.4, A.26.4.4.1.3, A.26.4.4.3
Facilities, 26.4.3, A.26.4.3.1, A.26.4.3.6
Protected premises fire alarm systems, 23.12.1
Testing and maintenance, 26.4.1.2
Proprietary supervising station alarm systems, 26.4, A.26.4.3.1 to A.26.4.6.1.6.3(5)
Communications and transmission channels, 26.4.6.1.3, A.26.4.6.1.3.3
Definition, 3.3.291.2
Disposition of signals, 26.4.6.1.6, A.26.4.6.1.6.3(5)
Operations, 26.4.6, A.26.4.6.1.3.3, A.26.4.6.1.6.3(5)
Performance criteria, Table A.26.1
Personnel, 26.4.1.2, 26.4.2.1, 26.4.5
Record keeping and reporting, 26.4.7
Supervisory signals, 26.4.6.1.6.3, A.26.4.6.1.6.3(5)
Testing and maintenance, 26.4.7.2, 26.4.8
Trouble signals, 26.4.6.1.6.4
Proprietary supervising station service, 26.4, A.26.4.3.1 to A.26.4.6.1.6.3(5)
Definition, 3.3.292.2
Protected premises (definition), 3.3.217
Protected premises (local) alarm and signaling systems, Chap. 23
Alarm signal verification, *see* Alarm verification features
Annunciation, signal, 23.8.1.2.1.1(1)
Building scale, C.2
Combination systems, 23.3.3.1(13), 23.8.2.1 to 23.8.2.8, 23.8.4, A.23.8.2.7.4, A.23.8.4.1 to A.23.8.4.10
Deactivation of alarms, 10.11.8
Dedicated function systems, 23.3.3.2, A.23.3.3.2
Definition, 3.3.111.4.2
Definition, 3.3.111.4, A.3.3.111.4
Dwelling unit fire and carbon monoxide warning equipment interconnected, 23.8.3
Emergency control functions, *see* Emergency control functions
Emergency voice/alarm communications, 23.9
End-to-end communication time, 26.6.3.8, A.12.3.3
Fire service response locations, C.2.1
High-profile or other unusual characteristics, buildings with, Annex C
In-building mass notification systems, 24.5.1.1
Initiating device circuits, 23.5
Inputs, 23.8.5, A.23.8.5.1.2 to A.23.8.5.8
Installation and design, 23.4.1
Integrity, 23.4, A.23.4.2.2
Low-power radio system requirements, 23.16, A.23.16
Nonrequired systems, 23.3.2, A.23.3.2
Notification appliance circuits, 23.7
One-way private radio alarm systems, supervision of, 26.6.5.2.3(B)
Performance, 23.4 to 23.7, A.23.4.2.2 to A.23.6.3.8, Table A.26.1
Positive alarm sequence, 23.8.1.2, A.23.8.1.2.1.1(6), A.23.8.1.2.1.2
Power supplies, 10.6, A.10.6.1 to A.10.6.10.3.4
Continuity of, 10.6.6.1
Engine-driven generators, secondary power provided by, 10.6.11.3.1
Presignal feature, 23.8.1.1, A.23.8.1.1
Releasing system, 23.3.3.1(4)
Definition, 3.3.111.4.3
Requirements, 23.3.1, 23.3.3, 23.8, A.23.3.1, A.23.3.3.1, A.23.3.3.2, A.23.8.1.1 to A.23.8.6.3.3
Signaling line circuits, 23.6, 27.2.4, A.23.6.1 to A.23.6.3.8
Supervising station, communications with, *see* Supervising station alarm systems
Suppression system signal initiation, 23.8.5.7, 23.8.5.8, 23.8.5.10, A.23.8.5.8
System performance and design guide, Annex C
Trouble notification appliances, 10.15.10.7, A.10.15.10.7
Two-way radio frequency (RF) systems, supervision of, 26.6.5.1.6(A)
Protected premises (local) control unit, *see* Fire alarm control units
Public address systems, 24.5.24, 24.5.25, A.24.5.24.2 *see also* Loudspeakers
Definition, 3.3.220
Public emergency alarm reporting systems, 1.3.1(4), Chap. 27 *see also* Alarm boxes
Alarm processing equipment, 27.5, A.27.5.2.5.1(1) to A.27.5.5.3.3
Auxiliary systems, 27.6.3, A.27.6.3.1.2 to A.27.6.3.2.2.1(2)(g)

Cable plant, public, *see* Wired network, public fire alarm reporting system
Coded systems, *see* Coded
Definition, 3.3.221
Household signaling systems, 29.10.9, A.29.10.9.1 to A.29.10.9.7
Management/maintenance, 27.2.1, 27.3, A.27.2.1, A.27.2.3
Metallic systems and interconnections, 27.7, A.27.7.1.6.2, A.27.7.3
Personnel qualifications, 10.5.6, 27.3.7, A.10.5.6.4.2(2), A.10.5.6.4.2(4)
Power supplies, 10.6, 27.5.2.5, 27.5.3.7, 27.5.5.2, 27.6.6.9 to 27.6.6.13, A.10.6.1 to A.10.6.10.3.4, A.27.5.2.5.1(1) to A.27.5.2.5.1(3)
Supervisory signals, 27.5.2.2.2
System integrity, 27.5.2.3
Telephone reporting systems
Series, 27.5.4.4
Street boxes, 27.6.5.1
Testing, Table 14.4.3.2, 14.4.9
Transmission means, 27.4.2.1.1, 27.7.2 *see also* Alarm boxes
Trouble signals, 27.5.2.2.2, 27.5.2.4
Type A, 27.5.2.1, 27.5.4.1.6.1
Definition, 3.3.221.2
Type B, 27.5.2.1, 27.5.4.1.1, 27.5.4.1.6.2, 27.5.5.1.2
Definition, 3.3.221.3
Wired network, *see* Wired network, public fire alarm reporting system
Wireless network, *see* Wireless network
Public fire service communications center, *see* Communications center
Publicly accessible alarm boxes, *see* Alarm boxes
Public operating mode, *see* Operating mode
Public safety agency (definition), 3.3.223
Public safety radio enhancement system
Definition, 3.3.224
Two-way system, 24.3.7.2(2), 24.9
Public safety radio system (definition), 3.3.225 *see also* Low-power radio transmitters; Radio alarm system (RAS); Two-way emergency communications systems
Public switched telephone network
Definition, 3.3.297.2 *see also* Managed facilities-based voice network (MFVN)
Loop start telephone circuit, 26.6.4.1.1(3)
Definition, 3.3.297.1
Purpose of code, 1.2, A.1.2

-Q-

Qualified, 10.5, A.10.5.3 to A.10.5.6.4.2(4)
Definition, 3.3.228, A.3.3.228
Inspection, testing, and maintenance personnel, *see* subhead: Service personnel
Plans examiners and inspectors, 10.5.4
Public emergency alarm reporting system personnel, 10.5.6, 27.3.7, A.10.5.6.4.2(2), A.10.5.6.4.2(4)
Service personnel, 10.5.3, 10.5.6.3, 14.2.3.6, A.10.5.3, A.14.2.3.6
Supervising station operators, 10.5.5, 26.2.9, A.10.5.5.1(2)
System designer, 10.5.1, 10.5.6.1, 24.12.2
System installer, 10.5.2, 10.5.6.2

-R-

Radiant energy–sensing fire detectors, 17.8, A.17.8.1 to A.17.8.5.4, B.5
Definition, 3.3.70.17
Design documentation, 7.3.5.3
Inspection, Table 14.3.1
Testing, Table 14.4.3.2
Radio alarm repeater station receiver (RARSR), 26.6.5.2, 27.5.5.3.5, A.26.6.5.2.2
Definition, 3.3.230
Testing, Table 14.4.3.2
Radio alarm supervising station receiver (RASSR), 26.6.5.2.1, 26.6.5.2.2(5), 26.6.5.2.4, 26.6.5.2.5
Definition, 3.3.231
Inspection, Table 14.3.1
Testing, Table 14.4.3.2
Radio alarm system (RAS), 26.6.2.3.3, 26.6.4.1.4 *see also* Digital alarm radio system (DARS); One-way private radio alarm systems; Two-way emergency communications systems
Definition, 3.3.232
In-building emergency radio communication systems, inspection and testing of, 14.4.10
Low-power radio system requirements *see* Low-power radio transmitters
Microwave radio systems, Table 14.4.3.2
Proprietary supervising station, use by, 26.4.6.1.6.2(1)
Remote supervising station system, 26.5.4.4(3)
Two-way radio communications enhancement system, 24.9
Radio alarm transmitter (RAT), 26.6.2.3.3, 26.6.5.2.1, 26.6.5.2.2(5), 26.6.5.2.4, 26.6.5.2.5(3), 26.6.5.2.7
Definition, 3.3.233
Inspection, Table 14.3.1
Testing, Table 14.4.3.2
Radio channels (definition), 3.3.47.2, A.3.3.47.2 *see also* Radio frequency
Radio frequency, 27.4.3.3, 27.4.3.4, A.27.4.3.3
Definition, 3.3.235, A.3.3.235
Raised floors, 17.7.3.2.2, 17.7.3.5, A.17.7.3.2.2
RARSR, *see* Radio alarm repeater station receiver (RARSR)
RAS, *see* Radio alarm system (RAS)
RASSR, *see* Radio alarm supervising station receiver (RASSR)
RAT, *see* Radio alarm transmitter (RAT)
Rate compensation detectors, 17.6.2.1, 17.6.2.2.1.1, 17.6.2.3.1, B.3.3.10
Definition, 3.3.70.18, A.3.3.70.18
Testing, Table 14.4.3.2
Rate-of-rise detectors
Definition, 3.3.70.19, A.3.3.70.19
Spacing, B.3.2.4.3, B.3.3.9
Testing, Table 14.4.3.2
Rate-of-rise tubing heat detectors, pneumatic, 12.6.11, Table 17.6.3.5.1, 17.6.3.5.2
Definition, 3.3.70.15
Rate-of-temperature detectors, 29.10.4.1
Receiver/control output signals, 23.16.5
Record drawings, 7.2.1(15), 7.5.3(2), 7.5.5, A.7.5.5.2, A.7.5.5.5
Definition, 3.3.238
Records, 7.2.1(16), 7.7, A.7.7.1.2 to A.7.7.3.2 *see also* Documentation; Records of completion
Guard's tour, 23.13.3
Household signaling systems, 29.11.6
Impairments, 10.21.2
Of inspection, testing, and maintenance, 7.2.1(17), 7.6.6, 7.8.2, Figs. 7.8.2(g) to (m), 29.11.6, A.7.8.2(1), A.7.8.2(2)
Maintenance of, 7.2.1(16), 7.7, A.7.7.1.2 to A.7.7.3.2
Nuisance alarms, 14.4.4.3.3.1
Permanent, 14.6.1, A.14.6.1
Proprietary supervising stations, 26.4.4.2.2, 26.4.4.4, 26.4.4.5, 26.4.7, Table A.26.1
Protected premises fire alarm systems, Table A.26.1
Public emergency alarm reporting system circuits, 27.3.3, 27.3.5
Remote supervising station systems, 26.5.1.3, 26.5.7, 26.5.8, Table A.26.1
Retention, 7.2.1(16), 7.7, A.7.7.1.2 to A.7.7.3.2
Simulated operation note, 14.6.4
Supervising stations, 14.6.3, 26.6.6, A.26.6.6.1 to A.26.6.6.5
Signals, 26.3.8.3.5.1, 26.3.9, Table A.26.1, Table A.26.6.1
Telephone reporting system, 27.5.4.4.1 to 27.5.4.4.6
Test signals, 26.3.8.3.5.1
Visual recording devices, *see* Visual recording devices
Voice recordings, 27.5.4.4.5, 27.5.4.4.6
Wireless reporting system, 27.5.5.1.2.3, 27.5.5.1.3

Records of completion, 7.2.1(13), 7.5.3(3), 7.5.6, 7.8.2, 14.2.5, 23.8.5.4.1(4), 29.11.6, A.7.5.6.1 to A.7.5.6.6.3, A.7.8.2(1), A.7.8.2(2), Table A.26.1, A.26.3.4.2(2)
Definition, 3.3.239
Rectifiers, 27.5.2.5.1 to 27.5.2.5.4, 27.5.2.6, A.27.5.2.5.1(1) to A.27.5.2.5.1(3)
Redundant communication paths, Table A.26.6.1
References, Chap. 2, Annex I
Refuge, area of, emergency communications systems, 24.3.7.2(3), 24.3.14.9, 24.10, A.24.3.14.9, A.24.10
Release devices and service, suppression system, *see* Extinguishing systems
Release service, door, *see* Door release service
Releasing fire alarm systems, *see* Protected premises (local) alarm and signaling systems
Releasing service fire alarm control units, *see* Fire alarm control units
Relocation, 23.8.6.1.1, 23.10.2, A.23.10.2, C.2.2.1.3
Alarm audible signal pattern for, 18.4.2.1, A.18.4.2.1
Definition, 3.3.242
In-building emergency voice/alarm communication systems, 24.4.8, A.24.4.8
Positive alarm sequence, use of, 23.8.1.2.1.1, A.23.8.1.2.1.1(6)
Remote alarm or supervisory indicators, smoke alarms, 17.4.6, A.17.4.6.1
Remote annunciators, 29.4, 29.8.2.3
Inspection, Table 14.3.1
Testing, Table 14.4.3.2
Remote communications stations, 24.10.2 to 24.10.4, 24.10.7 to 24.10.9, A.24.10.2, A.24.10.7
Remote receiving equipment, 27.5.3, A.27.5.3
Remote supervising station alarm systems, 23.12.1, 26.5, A.26.5.2.2(1) to A.26.5.3.2
Definition, 3.3.291.3
Operations, 26.5.7
Performance criteria, Table A.26.1
Power supply, 10.6.8, A.10.6.8.1
Presignal feature, 23.8.1.1.2(2)
Remote supervising stations, 29.10.9.10.6
Definition, 3.3.290.3
Remote supervising station service, 26.5, A.26.5.2.2(1) to A.26.5.3.2
Definition, 3.3.292.3
Documentation, 7.5.10
Repeater station, Table 14.4.3.2, 29.10.8.1.1(4)
Definition, 3.3.246
Reporting, *see* Records
Reset, 10.3.4, 10.11.6, 23.8.2.9, 23.8.2.10, 23.8.3.3, 26.6.4.1.3(C), 29.10.6.4, A.10.11.6, A.26.6.4.1.3(C)
Definition, 3.3.247
Residential board and care occupancies, 29.8.1.1(4), 29.8.1.1(6), A.29.1.2, A.29.8.1.1 *see also* Household signaling systems
Definition, 3.3.248
Residential occupancies, A.29.8.1.1 *see also* Household signaling systems
Definition, 3.3.249
Responses
Alarm, 10.9.1
Definition, 3.3.250.1, A.3.3.250.1
Definition, 3.3.250, A.3.3.250
Pre-alarm, 10.9.2
Definition, 3.3.250.2, A.3.3.250.2
Supervisory, 10.9.3
Definition, 3.3.250.3, A.3.3.250.3
Trouble, 10.9.4
Definition, 3.3.250.4, A.3.3.250.4
Response time index (RTI), 17.6.1.5, 17.6.2.2.2.3, 21.4.1, A.17.6.1.5, A.21.4.1
Definition, 3.3.251
Restorable initiating device (definition), 3.3.141.4
Restoration signals, 10.14.1, 10.15.1, 26.2.5, A.26.2.5.2.2
Definition, 3.3.263.8
Retransmission, *see* Transmission means
Retroactivity of code, 1.4
Return air system, 17.7.5.4.2.2, 17.7.5.5.8, A.17.7.5.4.2.2
Risk analysis
Definition, 3.3.253
Documentation, 7.3.6, A.7.3.6
Emergency command center, 24.11.1.1, 24.11.2.1, 24.11.3, A.24.11.1.1, A.24.11.3
Mass notification systems, 7.3.6.4, 24.3.12, 24.12.1, 24.12.6.4, A.24.3.12
In-building, 24.5.3.3, 24.5.4.2, 24.5.7, 24.5.10, A.24.5.7, A.24.5.10, A.24.5.22.3.1
Wide area, 24.6.5, 24.6.9, A.24.6.5, A.24.6.9
Rooming house, *see* Lodging or rooming houses
Room temperature supervisory signal-initiating devices, 17.17.5
Runner, 26.3.8.3.1(2), 26.3.8.3.2.1(2), 26.3.8.3.3(2), 26.4.5.3 to 26.4.5.5, 26.4.6.1.6.1(2), 26.4.6.1.6.2(2)
Definition, 3.3.254
Runner service, 26.3.2(6), Table A.26.1
Definition, 3.3.255

-S-

Scope of code, 1.1
Secondary power source, 23.6.3.6.2, A.21.3.2, A.21.10.3, A.23.6.3.6.2, A.23.8.5.4.6.3, A.23.10.2, A.24.5.24.2
Secondary (standby) power supply, 10.6.7, A.10.6.7.2 to A.10.6.7.3
Amplifiers, power load of, 10.19.1.2
Area of refuge, stairway, and elevator communication systems, 24.10, A.24.10
Continuity of power supply, 10.6.6, A.10.6.6
Control units, 23.8.2.6.1(2)
Electrically locked doors, 21.10.3, A.21.10.3
Engine driven generators, 10.6.11.3
Failure of, 23.12.3
Household signaling systems, 29.9.1, 29.9.3, 29.9.4(7), 29.9.9, 29.10.9.10.4
Integrity, 10.6.9, A.10.6.9.2, A.10.6.9.3
Supervising station alarm systems, 26.6.3.13, A.26.6.3.13.1
Testing, Table 14.4.3.2
Wide area mass notification system, 24.6.5.2, 24.6.10.1
Secondary trunk facility (definition), 3.3.256
Selective coverage, heat/smoke detectors, 17.5.3.2, A.17.5.3.2
Selective talk mode (definition), 3.3.301.2
Self-rescue, 29.6.1.1, A.29.1.1
Sensitivity, 14.4.4.3, 17.7.2, A.14.4.4.3, A.17.7.2
Separate sleeping area (definition), 3.3.258, A.3.3.258
Service personnel, *see* Personnel
Servicing, *see* Maintenance
Shall (definition), 3.2.6
Shapes of ceilings (definition), 3.3.260 *see also* Sloping ceilings; Sloping peaked-type ceiling; Sloping shed-type ceiling; Smooth ceilings
Shed ceiling types, *see* Sloping shed-type ceiling
Shop drawings, 7.4, 7.5.5.1, A.7.4.1 to A.7.4.9 *see also* Record drawings
Definition, 3.3.261, A.3.3.261
Should (definition), 3.2.7
Shunt-type auxiliary fire alarm system, 27.6.3.2.2(2), 27.6.3.2.3.1
Definition, 3.3.221.1.2
Shutter release, *see* Door release service
Signal (definition), 3.3.263, A.3.3.263 *see also* Alarm signals
Signaling line circuit interface, *see* Interface
Signaling line circuits, 7.3.7.5, 10.3.3, 10.12.5.2, Table 14.4.3.2, 21.2.10(2), 23.4.2, 23.4.3.2, 23.8.2.6, 24.5.1.3, 27.2.4, 27.7.2, A.23.4.2.2, F.1, F.3.1
Combined coded signals, 10.14.4
Definition, 3.3.265
Faults, 10.11.7
Performance/capabilities of, 23.6, A.23.6.1 to A.23.6.3.8

Signaling paths, 23.8.2.6.1, 23.8.2.7, 26.6.3.3 to 26.6.3.5, 27.2.4, 27.5.3.5, 27.5.3.6, 29.10.9.10.3, 29.10.9.10.5, A.23.8.2.7.4, A.26.6.3.5
Signaling systems, *see* Fire alarm systems; Protected premises (local) alarm and signaling systems
Signaling zones, *see* Zones
Signal priority, 10.7, 10.10.1, 24.4.7, 24.5.1.7, 24.5.2.8, 24.5.7, 24.5.13, 24.5.25.2(1), A.10.7.3, A.10.7.9, A.24.4.7.1, A.24.5.7, A.24.5.13.1, A.24.5.13.6(2)
Carbon monoxide alarm signals, 26.2.4.1.1
Priority supervising station alarm systems, 26.4.4.3.2
Signal transmission sequence, 26.6.4.1.5, A.26.6.4.1.5(4), A.26.6.4.1.5(8)
Definition, 3.3.264
Single dwelling unit (definition), 3.3.83.2 *see also* One- and two-family dwellings
Single-station alarm, 17.1.5, Chap. 29
Carbon monoxide, 29.7, A.29.7
Combination systems, 29.10.7.8, A.29.10.7.8
Definition, 3.3.269
Inspection, testing, and maintenance, Figs. 7.8.2(m), Table 14.4.3.2, 14.4.5, 29.10.5, A.14.4.5.3, A.14.4.5.4
Mechanically powered heat alarms, 29.5.2, 29.8.2.1.1, A.29.8.2.1.1
Definition, 3.3.129.1
One- and two-family dwelling units, 29.8.1.1, A.29.8.1.1(1) to A.29.8.1.1(5)
Visual notification appliance with, 29.9.6
Single-station alarm devices
Definition, 3.3.270
Listed, 29.3.1
Site-specific software, *see* Software
Sleeping areas/rooms, 29.8.1.1, 29.8.1.2, A.29.1.2, A.29.8.1.1(1) to A.29.8.1.1(5)
Audible appliances in, 18.4.6, A.18.4.6.1 to A.18.4.6.3(2)
One- and two-family dwelling units, 29.8.1.1, A.29.8.1.1(1) to A.29.8.1.1(5)
Visual notification appliances located in, 18.5.5.8, A.18.5.5.8.3
Voice/alarm communications systems, 24.4.4.2, 24.4.4.3, A.24.4.4.2, A.24.4.4.3
Sloping ceilings, 29.11.3.1, 29.11.3.2, 29.11.4.2, A.29.11.3.1, A.29.11.3.2, A.29.11.4.2
Definition, 3.3.38.2
Detector location, 17.6.3.4.2
Detector spacing, 17.6.3.4.1, 17.7.3.2.4.3 to 17.7.3.2.4.6, 17.7.3.7.5, 29.8.1.3.2, A.17.6.3.4, A.17.7.3.2.4.3 to A.17.7.3.2.4.5
Sloping peaked-type ceiling, 17.6.3.4, 17.7.3.3, 29.11.3.1, 29.11.4.2, A.17.6.3.4, A.17.7.3.3, A.29.11.3.1, A.29.11.4.2
Definition, 3.3.38.3, A.3.3.38.3
Sloping shed-type ceiling, 17.6.3.4, 17.7.3.4, A.17.6.3.4, A.17.7.3.4
Definition, 3.3.38.4, A.3.3.38.4
Smoke alarms, 29.8, A.29.1.1, A.29.8.1 to A.29.8.2.2 *see also* Multiple-station alarm; Single-station alarm
Definition, 3.3.275
Inspection, 14.4.5.1 to 14.4.5.4, A.14.4.5.3, A.14.4.5.4
Installation, 29.1.2, 29.3.3, 29.8.1, 29.11.3, A.29.1.2, A.29.3.3, A.29.8.1, A.29.11.3
Interconnection of, 29.8.2.1.1, 29.11.2, A.29.8.2.1.1, A.29.11.2.1
Maintenance, 14.4.5, A.14.4.5.3, A.14.4.5.4
One- and two-family dwelling units, 29.8.1, A.29.8.1
Performance of, 29.10.2, 29.10.6 to 29.10.8, A.29.10.2, A.29.10.6.2 to A.29.10.8.2.4
Power supplies, household fire alarm systems, 29.9, A.29.9.4(3)
Testing, 14.4.5.1 to 14.4.5.4, 29.10.5, A.14.4.5.3, A.14.4.5.4
Wireless interconnections, 29.10.8.2.4, A.29.10.8.2.4
Smoke control systems, 17.7.4.4.1, 17.7.5, 17.12.9.2, A.17.7.5 *see also* Firefighter's Smoke Control Station (FCFS)
Smoke detectors, 10.4.5, 10.4.6, 14.4.5, 17.5, 17.7, A.10.4.5, A.14.4.5.3, A.14.4.5.4, A.17.5.2 to A.17.5.3.3, A.17.7.1.1 to A.17.7.7.4, F.1
Air duct systems, 17.7.3.6.4.1, 17.7.4.4, 17.7.4.5, 17.7.5.2.1, 17.7.5.3.1, 17.7.5.3.4, 17.7.5.4.2, 17.7.5.5, 21.7.4, 23.8.5.4.6, A.17.7.4.4, A.17.7.5.2, A.17.7.5.4.2, A.23.8.5.4.6.3
Alarm verification features, *see* Alarm verification features
Area, 17.7.5.4.1
Characteristics, B.4.7
Cloud chamber smoke detection (definition) 3.3.276.1
Coverage, 17.5.3, A.17.5.3
Definition, 3.3.70.20
Design, 7.3.5.2, 17.7.1.1 to 17.7.1.3, 17.7.1.8, A.17.7.1.1 to A.17.7.1.3, A.17.7.1.8
Door release service, 17.7.5.3.3, 17.7.5.6, A.17.7.5.6.5.1(C)
Ducts, detectors in, *see* Ducts, detectors in
Elevators, 21.3, A.21.3
Heating, ventilating, and air conditioning (HVAC), 17.7.4, A.17.7.4.1, A.17.7.4.4
Inspection, Table 14.3.1
Installation, 17.4.3 to 17.4.7, 17.7.1.4 to 17.7.1.12, 17.7.3.6.3, 17.7.5.5, 21.3.6, 21.3.9, 21.3.10, 29.3.3, 29.8.1, 29.11.3, A.17.4.5 to A.17.4.7, A.17.7.1.8 to A.17.7.1.12, A.17.7.3.6.3.1, A.17.7.3.6.3.3, A.17.7.5.2, A.21.3.9, A.21.3.10, A.29.3.3, A.29.8.1
Integrity, monitoring for, 29.10.6.7
Location, 17.7.1.4, 17.7.1.6, 17.7.1.7, 17.7.1.9, 17.7.1.10, 17.7.3, 17.7.4.3, 17.7.5.5, 17.7.6.3.1, 17.7.6.3.2, 21.3.5, 29.3.3, 29.11.3.1 to 29.11.3.4, A.17.7.1.9, A.17.7.3.1 to A.17.7.3.7.8, A.17.7.5.2, A.21.3.5, A.29.3.3, A.29.11.3.1 to A.29.11.3.4(12)
Performance of, 29.10.1, 29.10.2, 29.10.6 to 29.10.8, A.29.2, A.29.10.6.2 to A.29.10.8.2.4
Protected premises alarm systems, 23.8.5.4, A.23.8.5.4.1, A.23.8.5.4.6.3
Response characteristics, B.4.2
Response prediction methods, B.4.8
Self-diagnostic, 29.10.1
Sensitivity, 14.4.4.3, 17.7.2, A.14.4.4.3, A.17.7.2
Smoke spread control, 17.7.4.4.1, 17.7.5, A.17.7.5
Spacing, *see* Spacing
Special considerations, 17.7.6, A.17.7.6.1.2 to A.17.7.6.3.3
Testing, Table 14.4.3.2, F.2.3 to F.2.8
Video image smoke detection, *see* Video image smoke detection (VISD)
Smoke doors, 21.7.2, A.21.7.2
Smooth ceilings
Definition, 3.3.40.3, A.3.3.40.3
Detector spacing, 17.7.3.2.3, 29.11.4.1, A.17.7.3.2.3.1, A.29.11.4.1
Software
Building system information units, 23.8.4.2.2.4
Definition, 3.3.279
Executive, 14.4.2.5
Definition, 3.3.279.1
Protected premises fire alarm systems, 23.2.2, 23.11.5.3, A.23.2.2.1.1 to A.23.2.2.2
Site-specific, 7.2.1(14), 7.5.3(4), 7.5.7, 14.2.5.1, 14.2.5.2, 14.6.1.2, A.14.6.1.2
Definition, 3.3.279.2
Solid joist construction (ceiling)
Definition, 3.3.40.4
Detector location, 17.6.3.2.2

Detector spacing, 17.6.3.2.1, 17.7.3.2.4, 29.11.4.6, 29.11.4.7, A.17.7.3.2.4, A.29.11.4.7
Spacing, Annex B
Definition, 3.3.281
Ember/spark detectors, 17.8.3.3, A.17.8.3.3.1 to A.17.8.3.3.6
Flame detectors, 17.8.3.2, A.17.8.3.2.1 to A.17.8.3.2.6
Gas detectors, 17.11.5
Heat detectors, 17.6.3, A.17.6.3.1.1 to A.17.6.3.6, B.1.3.2, B.3.3
Smoke detectors, 17.7.3, 17.7.4.3, 17.7.6.3.3, Table 17.7.6.3.3.2, 23.8.5.4.4, A.17.7.3.1 to A.17.7.3.7.8, A.17.7.6.3.3, B.4
Visual notification appliances, 18.5.5.5, 18.5.5.6, A.18.5.5.5, A.18.5.5.6
Spark detectors, 17.8, A.17.8.1 to A.17.8.5.4
Definition, 3.3.70.21
Spacing, 17.8.3.3, A.17.8.3.3.1 to A.17.8.3.3.6
System design, B.5.3
Spark detector sensitivity, B.5.3.3, B.5.3.4.1
Definition, 3.3.284
Sparks, B.5.1.4.2, B.5.3.1.3
Definition, 3.3.282, A.3.3.282
Special hazard equipment, testing of, Table 14.4.3.2
Spot-type detectors, 14.6.2.2, 17.7.3.2.4.2, A.17.7.3.2.4.2(3), A.17.7.3.2.4.2(4)
Definition, 3.3.70.22
Heat-sensing, 14.4.4.5, A.21.4.2
Location, 17.6.3.1.3.1, A.17.6.3.1.3.1
Marking of, 17.6.2.2.1.1, 17.6.2.2.2.3
Operating temperature/RTI information, 17.6.1.5, A.17.6.1.5
Smoke, 17.7.3.2, 17.7.6.1, 17.7.6.3.3.2, A.17.7.3.2, A.17.7.6.1.2
Testing, Table 14.4.3.2
Sprinkler systems, *see also* Extinguishing systems; Waterflow alarms
Dry pipe, 17.17.2.2.2, A.17.17.2.2.2
Elevators, use in, 21.3.8, 21.3.14.1(3), 21.4.1 to 21.4.3, A.21.3.8, A.21.4.1 to A.21.4.3
Stair enclosures, notification appliances in, 23.8.6.2, A.23.8.6.2
Stairway communication systems, 24.3.7.2(4), 24.10, A.24.10
Stairways, door unlocking controls for, 24.11.1.2(6)
Stakeholder (definition), 3.3.286
Steam pressure supervisory signal-initiating devices, 17.17.2.2.3
Storage batteries, *see* Batteries
Stratification, 17.7.1.11, 17.7.3.7.2, A.17.7.1.11, B.4.6
Definition, 3.3.287
Street boxes
Alarm, *see* Alarm boxes
Telephone, Table 26.6.3.2.2.2, 27.6.5.1
Subscriber (definition), 3.3.288
Subsequent alarms, recording and display of, 26.6.3.10
Subsidiary station, 26.4.3.5
Definition, 3.3.289
Supervising station, 10.14.1(3), Table A.26.1
Alarm signal disposition, 26.2.1, A.26.2.1.2, A.26.2.1.3(3)
Carbon monoxide signal disposition, 26.2.4, A.26.2.4.1.3
Change of service, 26.2.7, A.26.2.7
Definition, 3.3.290
Documentation, 7.5.8.3(3), 7.5.8.3(4)
End-to-end communication time, 26.6.3.8, A.12.3.3
Household signaling systems, 29.10.9, A.29.10.9.1 to A.29.10.9.7
Impairments, 10.21.3
One-way private radio alarm systems, 26.6.5.2, A.26.6.5.2.2
Power supplies
Continuity of, 10.6.6.2
Engine-driven generators, secondary power provided by, 10.6.11.3.2
Recording and display of subsequent alarms, 26.6.3.10
Records, 14.6.3
Secondary power system, 10.6.7.2.1.3
Signal processing equipment, 26.2.8
Trouble signals transmitted to 23.12.2, 23.12.3
Two-way radio frequency multiplex systems, 26.6.5.1.2
Supervising station alarm systems, 1.3.1(3), Chap. 26 *see also* Remote supervising station alarm systems
Alarm signal content, 26.2.3
Alarm signal verification, *see* Alarm verification features
Central station service alarm systems, *see* Central station service alarm systems
Communications with protected premises, 26.6, Table A.26.1, A.26.6.1 to A.26.6.6.5, Table A.26.6.1
Digital communicator systems, *see* Digital alarm communicator system (DACS)
Display, 26.6.6, A.26.6.6.1 to A.26.6.6.5
Inspection, testing, and maintenance, Table 14.3.1, Table 14.4.3.2, 26.3.3, 26.5.1.2, 26.5.1.3, 26.5.2, 26.5.8.2, 26.5.9, 26.6.7, A.26.5.2.2(1)
Performance criteria, 26.1, A.26.1
Power failure signals, 10.6.9.3, A.10.6.9.3
Power supplies, 10.6, A.10.6.1 to A.10.6.10.3.4
Presignal feature, 23.8.1.1.2(2)
Process monitoring, 23.3.3.1(11)
Proprietary, *see* Proprietary supervising station alarm systems
Public alarm reporting systems, *see* Public emergency alarm reporting systems
Receivers, Table 14.3.1, Table 14.4.3.2
Recording, 26.6.6, A.26.6.6.1 to A.26.6.6.5
Restoral signals, 10.14.1, 26.2.5, A.26.2.5.2.2
Spare equipment, 26.6.3.6
Transmitters *see* Transmitters
Trouble notification appliances, 10.15.10.7, A.10.15.10.7
Supervising station service, *see* Central station service; Proprietary supervising station service; Remote supervising station service
Supervising system operators, 10.5.5, A.10.5.5.1(2)
Supervisory condition, 10.8.2.2, 10.14.3.2, 10.15.10.4, 23.8.2.7, A.23.8.2.7.4, A.24.7
Definition, 3.3.61.1.3, A.3.3.61.1.3
Supervisory responses, 10.9.3
Definition, 3.3.250.3, A.3.3.250.3
Supervisory service
Definition, 3.3.293
Guard's tour, 23.3.3.1(10), 23.13, 23.14
One-way private radio alarm systems, 26.6.5.2.3
Supervisory signal initiating devices, 17.17, 23.8.5.6, 23.8.5.8 to 23.5.10, A.17.17.2.2.2, A.23.8.5.6, A.23.8.5.8, F.1, F.2.14
Definition, 3.3.141.5
Extinguishing systems, *see* Extinguishing systems
Inspection, Table 14.3.1
Testing, F.2.1.1, F.2.2
Supervisory signals, 10.14 *see also* Alarm signals; Guard's tour supervisory signal
Annunciation, 10.18.2
Central station response, 26.3.8.3.3, A.26.3.8.3.3
Coded, 10.14.3, 10.14.4
Combination systems, 23.8.4.10, A.23.8.4.10
Control units, interconnected, 23.8.2.7.2
Deactivation, 10.14.6, 10.14.7
Definition, 3.3.263.9, A.3.3.263.9
Distinctive signals, 10.10.1, 10.10.5, A.10.10.5
Ducts, detectors in, 21.7.4
Elevator recall operation initiation, 21.3.13
Elevator shutdown, control circuits for, 21.4.5
Household signaling systems, 29.10.9.1.3, 29.10.9.6
Identification of, 26.6.6.2, A.26.6.6.2(4)
Initiation, 23.8.5.8 to 23.5.10, A.23.8.5.8
Inspections, Table 14.3.1
Latching indication, 10.14.2
Low-power radio (wireless) systems, A.23.16.3.1.5

Power supervisory devices, operation of, 10.6.9.4
Priority of, 10.7.7, 26.2.4.1.1
Proprietary supervising station systems, 26.4.4.2.1.2, 26.4.4.2.1.3, 26.4.4.2.2.3, 26.4.6.1.6.3, A.26.4.6.1.6.3(5)
Protected premises alarm systems, 23.8.3.2
Public emergency alarm reporting systems, 27.5.2.2.2
Remote supervising station systems, 26.5.1.4, 26.5.3.1, 26.5.4.1.2, 26.5.6.3.2, 26.5.7, A.26.5.3.1.4, A.26.5.3.2
Response to 10.9.3
Secondary power, operation on, 10.6.7.1.1, 26.6.3.13, A.26.6.3.13.1
Supervising station alarm systems, 26.6.1.2, 26.6.3.11
Suppression system actuation, 23.11.5.1
Wireless, 27.5.5.1.3
Supplementary (definition), 3.3.296
Supply air system, 17.7.5.4.2.1
Suppressed (exception reporting) signal system, 6.6.4.2.2(E), 23.14
Suppression systems, *see* Extinguishing systems
Survivability, 23.10.3, 24.5.4.2, C.2.2.1.4
Suspended ceilings, 17.7.3.5
Switched telephone network, 26.5.4.4(1) *see also* Public switched telephone network
System designer, *see* Personnel
System installer, *see* Personnel
System interfaces, *see* Interface equipment
System operators
Definition, 3.3.298
Supervising station, *see* Personnel, Supervising station operators
System riser diagrams, 7.2.1(2), 7.4.6
System unit, 26.6.5.1.1(3)
Definition, 3.3.299
Loading capacity, 26.6.3.7
Spare equipment, 26.6.3.6

-T-

Tactile notification appliance, 18.10, A.18.10.2
Definition, 3.3.182.2
In-building mass notification systems, 24.5.19
Talk mode
Common talk mode, 24.8.6, 24.8.11, A.24.8.6
Definition, 3.3.301.1
Definition, 3.3.301
Selective talk mode (definition) 3.3.301.2
Telephones, *see also* Digital alarm communicator receiver (DACR)
Call forwarding equipment, 26.6.4.1.5(8), A.26.6.4.1.5(8)
Digital alarm communicator systems, use of, 26.6.4.1.4(A), 26.6.4.1.5, 26.6.4.2.2, Table A.26.6.1, A.26.6.4.1.5(4), A.26.6.4.1.5(8), A.26.6.4.2.2(A), A.26.6.4.2.2(D)
Distributed recipient mass notification, A.24.7.5
Emergency command center, 24.11.1.2(6), 24.11.1.6
One-way (outgoing only), 26.5.4.4(2)
Proprietary supervising station, 26.4.6.1.6.2(1)
Remote supervising station, 26.5.4.4
Series reporting systems, 27.5.4.4
Switched telephone network, 26.5.4.4(1) *see also* Public switched telephone network
Testing, Table 14.4.3.2
Textual appliances, 18.8.2
Two-way telephone communications service, 10.19.2, 24.8, A.24.8
Telephone street boxes, Table 26.6.3.2.2.2, 27.6.5.1
Terrorism, A.24.7
Testing, 10.3.2, Chap. 14, Table A.26.1
Automated, 14.2.8
Central station service, 26.3.8.3.5.1, 26.3.9.2, 26.3.10
Circuits, *see* Circuits
Documentation and records, 7.2.1(17), 7.6, 7.8.2, 14.2.5, 14.6.2, A.7.8.2(1), A.7.8.2(2), A.14.6.2.4
Emergency communications systems, 24.3.5.3, 24.3.6.5, 24.11.7
Engine-driven generators, 10.6.11.4
Extinguishing system release, *see* Extinguishing systems
Frequency, 14.4.4
Heat alarms, 29.10.5
Household carbon monoxide detection systems, 14.4.8, 29.10.6.11, A.14.4.8.1.3
Household signaling systems, 14.4.6, 29.6.3, 29.10.5, 29.10.9.8, A.14.4.6.3, A.29.6.3
In-building mass notification systems, 24.5.1.4, 24.5.6
Methods, 14.4.3, Table 14.4.3.2, A.14.4.3, A.14.4.3.2
Personnel, *see* Personnel
Plan, 14.2.10, A.14.2.10
Proprietary supervising station alarm systems, 26.4.1.2, 26.4.7.2, 26.4.8
Protected premises alarm systems, 23.2.2.3
Public emergency alarm reporting systems, 27.3.3, 27.3.6, 27.5.5.1.1.5, 27.5.5.1.1.7, 27.5.5.1.3, 27.5.5.3.3, 27.5.5.3.4, 27.6.3.2.3.17(B), A.27.5.5.3.3
Remote supervising station systems, 26.5.1.2, 26.5.1.3, 26.5.2, 26.5.8.2, 26.5.9, A.26.5.2.2(1)
Smoke alarms/detectors, 14.4.5.1 to 14.4.5.4, 29.10.5, 29.13, A.14.4.5.3, A.14.4.5.4
Supervising station fire alarm systems, 26.2.7.2, 26.2.7.3, 26.3.2(5), 26.6.7, Table A.26.6.1
System acceptance, 14.4.1
Reacceptance testing, 14.4.2, A.14.4.2
Voice systems, intelligibility of Annex D
Testing personnel, *see* Personnel
Test signals, 26.3.8.3.5, 26.6.4.1.4(B), 26.6.4.1.5(6), 26.6.4.2.2(G), 26.6.5.2.7(C), 26.6.6.4.2.2(H), 27.5.2.2.2, 27.5.5.1.1.7, 27.5.5.1.3, A.26.3.8.3.5.3
Textual audible notification appliances, *see* Audible notification appliances
Textual visual notification appliances, *see* Visual notification appliances
Thermal energy storage systems (definition), 3.3.99.3
Throughput probability, Table A.26.6.1
Time Constant and Response Time Index (RTI), B.3.2.5
Tone generator, *see* Fire alarm/evacuation signal tone generator
Total coverage, detectors, 17.5.3.1, A.17.5.3.1
Transient suppressors, Table 14.3.1
Transmission channels, 26.6.1.1(2), A.26.6.1
Definition, 3.3.47.3
Digital alarm communicator receiver (DACR), 26.6.4.2.2, A.26.6.4.2.2(A), A.26.6.4.2.2(D)
Digital alarm communicator transmitter (DACT), 26.6.4.1.4, A.26.6.4.1.4(B)(6)
One-way private radio alarm systems, 26.6.5.2.4
Proprietary supervising station fire alarm systems, 26.4.6.1.3, A.26.4.6.1.3.3
Two-way radio frequency (RF) multiplex systems, 26.6.5.1.3
Transmission means, 26.2.1, A.26.2.1.2, A.26.2.1.3(3) *see also* Active multiplex systems
Central station alarm systems, 26.3.2(3), 26.3.3.2, 26.3.6.5, 26.3.6.6, 26.3.8.3.1(1), Table A.26.1, A.26.3.6.6, A.26.3.8.3.1(1)
Digital alarm communicator transmitter (DACT) 26.6.4.1.4, 26.6.4.1.5, A.26.6.4.1.4(B)(6), A.26.6.4.1.5(4), A.26.6.4.1.5(8)
Emergency communications systems, 24.11.5
Household signaling systems, 29.10.9.1.1 to 29.10.9.1.3, 29.10.9.8, 29.10.9.10
Proprietary supervising station, 26.4.6.1, Table A.26.1, A.26.4.6.1.3.3, A.26.4.6.1.6.3(5)
Public emergency alarm reporting system, Table 14.4.3.2, 27.5.5.4

Remote supervising station systems, 26.5.1.3, 26.5.1.6, 26.5.4.3, 26.5.4.4, 26.5.6.3.1(1), Table A.26.1
Supervising station alarms systems, 26.6, Table A.26.6.1, A.26.6.1 to A.26.6.6.5
Testing, Table 14.4.3.2, 14.5.5, 14.5.6, 29.10.9.8
Wired network, 27.4.2.1.1
Transmitters, 10.4.5, 26.6.1.1, A.10.4.5 *see also* Digital alarm communicator transmitter (DACT); Digital alarm radio transmitter (DART); Radio alarm transmitter (RAT)
Auxiliary, 27.6.3.2.3.1 to 27.6.3.2.3.3, 27.6.3.2.3.6, 27.6.3.2.3.12, 27.6.3.2.3.16
Definition, 3.3.306
Low-power radio, 23.16.2 to 23.16.4, A.23.16.2 to A.23.16.3.1.5
McCulloh systems, Table 14.3.1
Testing, Table 14.4.3.2
Unique identifier, 26.6.3.9, Table A.26.6.1
Transponders, (definition) 3.3.307
Trouble condition, 10.8.2.3, 23.8.2.7, A.23.8.2.7.4, A.24.7
Definition, 3.3.61.1.4, A.3.3.61.1.4
Supervising station, transmission to 26.6.6.1, 29.10.9.10.4, A.26.6.6.1
Trouble responses, 10.9.4
Definition, 3.3.250.4, A.3.3.250.4
Trouble signals, 10.15, 10.19.1, 21.2.11(3), A.10.15.9, A.10.15.10.7, A.10.19.1
Annunciation, 10.18.2
Auxiliary systems, public fire alarm reporting systems, 27.6.3.2.2.1(1)(c)
Carbon monoxide, 26.2.4.2
Central station response, 26.3.8.3.4, A.26.3.8.3.4(1)
Combination systems, 23.8.4.7(3)
Control circuits, 10.17.3
Control units, interconnected, 23.8.2.7.3, 29.10.6.7
Deactivation of, 10.15.9, 10.15.10, A.10.15.9, A.10.15.10.7
Definition, 3.3.263.10, A.3.3.263.10
Digital alarm communicator systems, 26.6.4.1.4(B), 26.6.4.2.2(H), A.26.6.4.1.4(B)(6)
Distinctive signals, 10.10.1, 10.10.6
Energy storage systems (ESS), failure of, 10.6.4.4
Household signaling systems, 29.9.5, 29.9.7, 29.10.1, 29.10.6.5, 29.10.7.6, 29.10.9.1.3, 29.10.9.6
Initiation, 23.8.5.11
Inspection, Table 14.3.1
Integral, initiating devices with, 23.8.5.3.1
Loss of power, 10.6.9.1.1, 10.15.2
Low-power radio (wireless) systems, 23.16.4.5 to 23.16.4.7, A.23.16.3.1.5
Priority of, 26.2.4.1.1
Proprietary supervising station, 26.4.4.2.1.2 to 26.4.4.2.1.4, 26.4.4.2.2.3, 26.4.4.5, 26.4.6.1.6.4
Public emergency alarm reporting systems, 27.5.2.2.2, 27.5.2.4
Remote supervising station systems, 26.5.1.4, 26.5.3.1.1 to 26.5.3.1.4, 26.5.3.2, 26.5.4.1.2, 26.5.4.1.3, 26.5.6.3.3, 26.5.7, A.26.5.3.1.4, A.26.5.3.2
Response to 10.9.4
Secondary power, operation on, 10.6.7.1.1, 26.6.3.13, A.26.6.3.13.1
Signaling line circuits and pathways, 12.3.1 to 12.3.3, 12.3.6, 12.3.7, 12.6.7, 12.6.15, 23.4.2.1, A.12.3.1, A.12.3.3, A.12.3.6(1) to A.12.3.6(5)
Supervising station, transmission to 23.12.2, 23.12.3, 26.6.1.2, 26.6.3.11, 26.6.6.2, A.26.6.6.2(4)
Supervisory signal deactivation, signal for, 10.14.7.5
Testing, Table 14.4.3.2, F.2.1 to F.2.3
Wireless, 27.5.5.1.3
Wireless box systems, 27.5.5.3.6, 27.5.5.3.7
Wireless network boxes, 27.6.3.2.3.17(B), 27.6.6.11.4.2
Trunk facility, primary (definition), 3.3.208
Two-way emergency communications systems, 1.3.2(2), 23.9.4
Area of refuge, stairway, and elevator emergency communications systems, 24.10, A.24.10
Classification as, 24.3.7, A.24.3.7
Coded retransmission, confirmation of, 26.4.6.1.3.3, A.26.4.6.1.3.3
Definition, 3.3.90.2
In-building
Area of refuge (area of rescue assistance) emergency communications systems, Table 14.3.1
Elevator emergency communications systems, 24.10, A.24.10
Wired systems, 24.3.7.2(1), 24.3.14.7, 24.3.14.8, 24.8, A.24.8
Public emergency alarm reporting systems, 27.4.3.5
Radio communications enhancement system, 24.3.7.2(2), 24.9
Radio frequency (RF) multiplex systems, 26.6.4.1.4, 26.6.5.1, Table A.26.6.1, A.26.6.4.1.4(B)(6), A.26.6.5.1.4, Fig. F.3.14(c)
Classifications, adverse conditions, 26.6.5.1.4, A.26.6.5.1.4
Loading capacities, 26.6.5.1.5, Table 26.6.5.1.5(B)
Testing, Table 14.4.3.2
Transmission channel, 26.6.5.1.3
Stairway communication systems, 24.10, A.24.10
Telephone communications service, 10.19.2
Two-way radio communications enhancement system, 14.4.10, 24.9
Type A public emergency alarm reporting system, *see* Public emergency alarm reporting systems
Type B public emergency alarm reporting system, *see* Public emergency alarm reporting systems

-U-

Underground cables, 27.7.1.2.2, 27.7.1.3
Unintentional alarms, 10.22(3)
Definition, 3.3.314.3
Unique transmitter identifier, 26.6.3.9, Table A.26.6.1
Units of measurement, 1.6, A.1.6.5
Unknown alarms, 10.22(4)
Definition, 3.3.314.4
Unwanted alarms, 10.22, A.10.22, A.29.1.1, A.29.10.6.2, B.3.2.4.2 *see also* Nuisance alarms
Definition, 3.3.314, A.3.3.314
Uplink (definition), 3.3.315

-V-

Valves, supervision of, 17.17.1, F.2.15
Video alerting, 24.5.20, A.24.5.20
Video image flame detection (VIFD), Table 14.3.1, 17.8.5, A.17.8.5.3, A.17.8.5.4
Definition, 3.3.316, A.3.3.316
Video image smoke detection (VISD), Table 14.3.1, 17.7.7, A.17.7.7.3, A.17.7.7.4
Definition, 3.3.276.5, A.3.3.276.5
Visible zone indication
Alarm, 10.18.1
Supervisory and trouble annunciation, 10.18.2
Visual notification appliances, 18.4.1.1, A.18.4.1.1
Alarm receiving equipment, public fire service communications equipment, 27.5.2.2.5, 27.5.2.4.2, 27.5.2.4.4, 27.5.2.5.7, 27.5.4.2.3, 27.5.4.3.2, 27.5.5.3.7
Alarm signal deactivation (silencing) 10.11.8.1, 10.11.8.2, 10.12.2, 24.5.13.5, 24.5.25.1, 29.10.6.5(2), 29.10.6.6(2), A.10.12.2
Appliance photometrics, 18.5.4, A.18.5.4
Area of coverage, 18.5.2, A.18.5.2.2
Area of refuge, stairway, and elevator communication systems, 24.10.9
Definition, 3.3.182.3
Distributed recipient mass notification systems, A.24.7.5
Documentation, 7.2.1(11)
Elevator cars, 23.8.6.2.2

Emergency voice/alarm communications, 24.4.8.6, A.24.4.8.6.1, A.24.4.8.6.3, G.2.2.1(5)
Exit stair enclosures and exit passageways, 23.8.6.2.1
Graphical, 18.9, 24.5.18, A.18.9, A.24.5.18
Household signaling systems, 29.5.8, 29.5.10.2, A.29.5.8, A.29.5.10.2
Alarm silence indication, 29.10.6.5(2), 29.10.6.6(2)
Power supplies, 29.9.6
Trouble signals, 29.9.5(1)
In-building mass notification systems, 24.5.16 to 24.5.18, 24.5.20, A.24.5.18, A.24.5.20
Inspections, Table 14.3.1
Light, color, and pulse characteristics, 18.5.3, A.18.5.3.3 to A.18.5.3.7
Location, 18.5.5, 18.5.6, 18.9.2, A.18.5.5.1 to A.18.5.5.8.3
Mass notification systems, 24.5.2.10, 24.5.25.2(4), A.24.5.2.10
Mounting
Ceiling-mounted, 18.5.5.3, 18.5.5.4, Table 18.5.5.5.1(b), 18.5.5.5.6 to 18.5.5.5.8, A.18.5.5.4, A.18.5.5.5.6
Desktop and surface-mounted, 18.9.2.3
Wall-mounted appliances, 18.5.5.1, 18.5.5.2, Table 18.5.5.5.1(a), 18.5.5.5.3, 18.5.5.5.4, A.18.5.5.1
Nameplates, 18.3.2.1, 18.3.2.3
Occupant evacuation elevators, 21.6.2.6.5
Performance-based alternative, 18.5.5.7, A.18.5.5.7
Private mode, 18.6, 18.9.2.1, A.18.6
Public mode, 18.4.4.2, 18.5.A.18.5, 18.9.2.2
Remote supervising station systems, 26.5.1.4, 26.5.1.5, 26.5.4.1
Spacing, 18.5.5.5, 18.5.5.6, A.18.5.5.5, A.18.5.5.6
Supervisory signals, 10.14.1, 10.14.2.1, 10.14.6.1, 10.14.6.2
Supplementary visual signaling method, 18.7
Testing, Table 14.4.3.2, F.2.11, F.2.12
Textual appliances, 10.6.7.2.1.5, 18.9, 24.11.6, A.18.9, A.24.11.6
Definition, 3.3.182.3.1, A.3.3.182.3.1
In-building mass notification systems, 24.5.18, A.24.5.18
Wide area mass notification system, 24.6.10
Trouble signals, 10.15.7 to 10.15.9, Table 14.4.3.2, A.10.15.9
Wide-area signaling, 18.5.6
Zone indication
Alarm, 10.18.1
Supervisory and trouble, 10.18.2

Visual recording devices, 27.5.2.2, 27.5.4.4.3
Permanent record (recording), 27.5.2.2.2, 27.5.2.2.3, 27.5.2.2.5, 27.5.4.4.1 to 27.5.4.4.3, 27.5.5.1.3
Definition, 3.3.199
Voice/alarm signaling service, 18.4.1.6, 24.4.4, 29.5.6, A.18.4.1.6, A.24.3.5.2, A.24.4.4.2, A.24.4.4.3, A.29.5.6
see also In-building fire emergency voice/alarm communications systems (EVACS)
Voice communications systems, *see* Emergency voice/alarm communications; In-building fire emergency voice/alarm communications systems; Voice/alarm signaling service
Voice intelligibility, *see* Intelligibility
Voice message priority, 24.4.7, 24.5.1.7, 24.5.2.8, 24.5.13, A.24.4.7.1, A.24.5.13.1, A.24.5.13.6(2)
Definition, 3.3.319
Voice recordings, 27.5.4.4.5, 27.5.4.4.6

-W-

Warning messages, G.2.2
Waterflow alarms, 17.13, A.17.13.1, A.17.13.2
Auxiliary fire alarm systems, application of, Table 27.6.3.2.2.3
Combination systems, 29.10.7.8.4
Elevator shutdown, 21.3.3.2, 21.4.3, 21.8, A.21.4.3
Inspection, Table 14.3.1
Manual fire box, available, 23.8.5.1.2, A.23.8.5.1.2
Signal initiation, 23.8.5.5, 26.2.1.1, A.23.8.5.5
Testing, Table 14.4.3.2, F.2.15
Water level supervisory signal-initiating devices, 17.17.3
Water temperature supervision, 17.17.4
WATS (Wide Area Telephone Service) (definition), 3.3.320
Wavelength, B.5.1.2
Definition, 3.3.321, A.3.3.321
Wide area mass notification system, *see* One-way emergency communications systems
Wide-area signaling, 18.4.10, 18.5.6
Definition, 3.3.323
Wired IP transmissions, A.26.6.3
Wired network, 27.5.4
Definition, 3.3.177.1
Public fire alarm reporting system, 27.4.1.1, 27.4.2, Table 26.6.3.2.2.2, 27.6.5, 27.7, A.27.7.1.6.2, A.27.7.3

Wireless control units (definition), 3.3.63.4 *see also* Radio alarm system (RAS)
Wireless devices
Household signaling systems, 29.10.8, A.29.10.8.2.1, A.29.10.8.2.4
Low-power radio transmitters, *see* Low-power radio transmitters
Nonsupervised wireless interconnected alarms, 29.10.8.2, A.29.10.8.2.1
Wireless mesh networks (WMN), 26.6.5.2.8
Definition, 3.3.325, A.3.3.325
Wireless network, 27.4.1.1, 27.4.3, A.27.4.3.3
Alarm processing equipment, 27.5.5, A.27.5.5.1.1 to A.27.5.5.3.3
Alarm receiving equipment, public fire service communications center, 27.5.5, A.27.5.5.1.1 to A.27.5.5.3.3
Definition, 3.3.177.2
Publicly accessible alarm boxes, 27.6.6, A.27.6.6.2, A.27.6.6.7
Auxiliary systems, public fire alarm reporting, Table 27.6.3.2.2.2
Receiving networks, 27.5.5.1.1.1 to 27.5.5.1.1.5
Wireless protection system (definition), 3.3.326
Wireless repeater, A.27.5.5.1.4
Definition, 3.3.327
Wireless signals, mass notification system, Table 14.4.3.2
Wiring, *see also* Circuits
Diagrams, 7.4.8, Annex F
Fire alarm control unit to emergency control function relay or other appliance, 21.2.6
Household signaling systems, 29.11.5

-Z-

Zones
Definition, 3.3.328
Notification, 10.7.3(1), 18.4.2.3, 18.4.3.3, 23.8.6.1.1, 23.8.6.1.3, 23.8.6.3, 23.8.6.4.1, 23.8.6.4.2, 23.10.2, 24.4.8.2, 24.4.8.5, 24.5.2.8, 24.5.3.3, 24.5.12.10, A.18.4.2.3, A.23.8.6.3.3, A.24.3.5.2
Definition, 3.3.328.1
High power loudspeaker array, 24.6.5.1, 24.6.8, A.24.6.5.1(B)
Occupant evacuation elevator, 21.6.2.6.4, A.21.6.2.6.4
Signaling, 23.8.2.8, 23.10.2, 24.4.1.2, 24.4.5.6, 24.4.5.7, 24.4.8.6.1, 24.4.9, A.23.10.2, A.24.4.8.6.1, A.24.4.9.1
Definition, 3.3.328.2, A.3.3.328.2
Visible zone indication, 10.18.1, 10.18.2

IMPORTANT NOTICES AND DISCLAIMERS CONCERNING NFPA® STANDARDS

NOTICE AND DISCLAIMER OF LIABILITY CONCERNING THE USE OF NFPA STANDARDS

NFPA® codes, standards, recommended practices, and guides ("NFPA Standards"), of which the document contained herein is one, are developed through a consensus standards development process approved by the American National Standards Institute. This process brings together volunteers representing varied viewpoints and interests to achieve consensus on fire and other safety issues. While the NFPA administers the process and establishes rules to promote fairness in the development of consensus, it does not independently test, evaluate, or verify the accuracy of any information or the soundness of any judgments contained in NFPA Standards.

The NFPA disclaims liability for any personal injury, property or other damages of any nature whatsoever, whether special, indirect, consequential or compensatory, directly or indirectly resulting from the publication, use of, or reliance on NFPA Standards. The NFPA also makes no guaranty or warranty as to the accuracy or completeness of any information published herein.

In issuing and making NFPA Standards available, the NFPA is not undertaking to render professional or other services for or on behalf of any person or entity. Nor is the NFPA undertaking to perform any duty owed by any person or entity to someone else. Anyone using this document should rely on his or her own independent judgment or, as appropriate, seek the advice of a competent professional in determining the exercise of reasonable care in any given circumstances.

The NFPA has no power, nor does it undertake, to police or enforce compliance with the contents of NFPA Standards. Nor does the NFPA list, certify, test, or inspect products, designs, or installations for compliance with this document. Any certification or other statement of compliance with the requirements of this document shall not be attributable to the NFPA and is solely the responsibility of the certifier or maker of the statement.

ADDITIONAL NOTICES AND DISCLAIMERS

Updating of NFPA Standards

Users of NFPA codes, standards, recommended practices, and guides ("NFPA Standards") should be aware that these documents may be superseded at any time by the issuance of new editions or may be amended from time to time through the issuance of Tentative Interim Amendments or corrected by Errata. An official NFPA Standard at any point in time consists of the current edition of the document together with any Tentative Interim Amendments and any Errata then in effect. In order to determine whether a given document is the current edition and whether it has been amended through the issuance of Tentative Interim Amendments or corrected through the issuance of Errata, consult appropriate NFPA publications such as the National Fire Codes® Subscription Service, visit the NFPA website at www.nfpa.org, or contact the NFPA at the address listed below.

Interpretations of NFPA Standards

A statement, written or oral, that is not processed in accordance with Section 6 of the Regulations Governing the Development of NFPA Standards shall not be considered the official position of NFPA or any of its Committees and shall not be considered to be, nor be relied upon as, a Formal Interpretation.

Patents

The NFPA does not take any position with respect to the validity of any patent rights referenced in, related to, or asserted in connection with an NFPA Standard. The users of NFPA Standards bear the sole responsibility for determining the validity of any such patent rights, as well as the risk of infringement of such rights, and the NFPA disclaims liability for the infringement of any patent resulting from the use of or reliance on NFPA Standards.

NFPA adheres to the policy of the American National Standards Institute (ANSI) regarding the inclusion of patents in American National Standards ("the ANSI Patent Policy"), and hereby gives the following notice pursuant to that policy:

> **NOTICE:** The user's attention is called to the possibility that compliance with an NFPA Standard may require use of an invention covered by patent rights. NFPA takes no position as to the validity of any such patent rights or as to whether such patent rights constitute or include essential patent claims under the ANSI Patent Policy. If, in connection with the ANSI Patent Policy, a patent holder has filed a statement of willingness to grant licenses under these rights on reasonable and nondiscriminatory terms and conditions to applicants desiring to obtain such a license, copies of such filed statements can be obtained, on request, from NFPA. For further information, contact the NFPA at the address listed below.

Law and Regulations

Users of NFPA Standards should consult applicable federal, state, and local laws and regulations. NFPA does not, by the publication of its codes, standards, recommended practices, and guides, intend to urge action that is not in compliance with applicable laws, and these documents may not be construed as doing so.

Copyrights

NFPA Standards are copyrighted. They are made available for a wide variety of both public and private uses. These include both use, by reference, in laws and regulations, and use in private self-regulation, standardization, and the promotion of safe practices and methods. By making these documents available for use and adoption by public authorities and private users, the NFPA does not waive any rights in copyright to these documents.

Use of NFPA Standards for regulatory purposes should be accomplished through adoption by reference. The term "adoption by reference" means the citing of title, edition, and publishing information only. Any deletions, additions, and changes desired by the adopting authority should be noted separately in the adopting instrument. In order to assist NFPA in following the uses made of its documents, adopting authorities are requested to notify the NFPA (Attention: Secretary, Standards Council) in writing of such use. For technical assistance and questions concerning adoption of NFPA Standards, contact NFPA at the address below.

For Further Information

All questions or other communications relating to NFPA Standards and all requests for information on NFPA procedures governing its codes and standards development process, including information on the procedures for requesting Formal Interpretations, for proposing Tentative Interim Amendments, and for proposing revisions to NFPA standards during regular revision cycles, should be sent to NFPA headquarters, addressed to the attention of the Secretary, Standards Council, NFPA, 1 Batterymarch Park, P.O. Box 9101, Quincy, MA 02269-9101; email: stds_admin@nfpa.org

For more information about NFPA, visit the NFPA website at www.nfpa.org. All NFPA codes and standards can be viewed at no cost at www.nfpa.org/docinfo.